ORDER No. PCZ1404076CE

# Service Manual

## LCD Television

## TX-55AS650B
## TX-55AS650E

## LA51 Chassis

**⚠ Warning**

This service information is designed for experienced repair technicians only and is not designed for use by the general public. It does not contain warnings or cautions to advise non-technical individuals of potencial dangers in attempting to service a product. Products powered by electricity should be serviced or repaired only by experienced professional technicians. Any attempt to service or repair the product or products deal within this service information by anyone else could result in serious injury or death.

**IMPORTANT SAFETY NOTICE**

There are special components used in this equipment which are important for safety. These parts are marked ⚠ in the Schematic Diagrams, Circuit Board Diagrams, Explorer Views and Replacement Parts List. It is essential that these critical parts should be replaced with manufacturer´s specified parts to prevent shock, fire or other hazards. Do not modify the original design without permission of manufacturer.

Panasonic

© Panasonic Corporation 2014.
Unauthorized copying and distribution is a violation of law.

# Contents

SAFETY PRECAUTIONS ..... 3
GENERAL GUIDE LINES..... 3
TOUCH – CURRENT CHECK..... 3
PREVENTION OF ELECTROSTATIC DISCHARGE (ESD) TO ELECTROSTATICALLY SENSITIVE (ES) DEVICES ..... 4
ABOUT LEAD FREE SOLDER (PBF)..... 5
SUGGESTED PB FREE SOLDER..... 5
SERVICE NAVIGATION ..... 6
CHASSIS BOARD LAYOUT..... 6
SERVICE HINTS ..... 7
APPLICABLE SIGNALS..... 8
SPECIFICATIONS ..... 9
TECHNICAL DESCRIPTION ..... ….11
SPECIFICATION OF KEY FOR DTCP-IP, C2MOD, CI PLUS, DIMORA, HDCP2, NETFLIX, WIDEVINE, FREETIME ..... 11
GENERAL INFORMATION ..... 11
REPLACEMENT OF ICS..... 11
MODEL AND KEYS ..... 11
USB HDD RECORDING ..... 11
SETTING INSPECTION..... 12
SERVICE MODE FUNCTION ..... 13
SERVICE ..... 14
SERVICE TOOL MODE..... 15
HOTEL MODE ..... 16
DATA COPY BY USB MEMORY ..... 17
DATA COPY FROM TV SET TO USB MEMORY ..... 18
DATA COPY FROM USB MEMORY TO TV SET ..... 19
OPTION BYTES DESCRIPTION ..... 20
SELF CHECK ..... 21
POWER LED BLINKING TIMING CHART ..... 22
LCD PANEL TEST MODE ..... 22
WIRING DIAGRAM..... 23
BLOCK DIAGRAM (1 OF 2)..... 24
PARTS LOCATION..... 26
LOCATION OF LEAD WIRING ..... 28
REPLACEMENT PARTS LIST NOTE..... 29
REPLACEMENT PARTS LIST..... 30
SCHEMATIC DIAGRAMS NOTE..... 55
A-BOARD (1 OF 13) SCHEMATIC DIAGRAM..... 56
P-BOARD (1 OF 3) SCHEMATIC DIAGRAM..... 69
K-BOARD SCHEMATIC DIAGRAM ..... 72
GK-BOARD SCHEMATIC DIAGRAM ..... 73
CONDUCTOR VIEWS ..... 74

NDL49860

# Safety Precautions

## General Guide Lines

1. When servicing, observe the original lead dress. If a short circuit is found, replace all parts which have been overheated or damaged by the short circuit.
2. After servicing, see to it that all the protective devices such as insulation barriers, insulation papers shields are properly installed.
3. After servicing, make the following touch current checks to prevent the customer from being exposed to shock hazards.
4. Always ensure cover label TBM4GU113 is correctly replaced before returning to customer (see Fig.1).

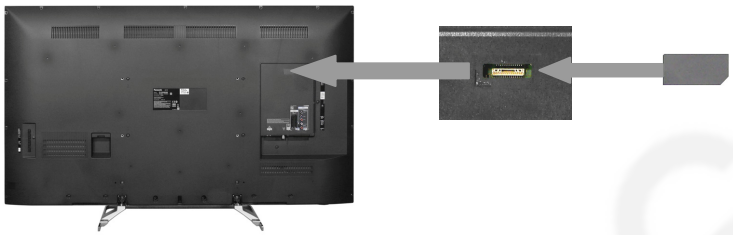

**Fig. 1**

## Touch-Current Check

1. Plug the AC cord directly into the AC outlet. Do not use an isolation transformer for this check.
2. Connect a measuring network for touch currents between each exposed metallic part on the set and a good earth ground such as a water pipe, as shown in Fig. 2.
3. Use Leakage Current Tester (Simpson 228 or equivalent) to measure the potential across the measuring network.
4. Check each exposed metallic part, and measure the voltage at each point.
5. Reserve the AC plug in the AC outlet and repeat each of the above measure.
6. The potential at any point (TOUCH CURRENT) expressed as voltage U1 and U2, does not exceed the following values:
   For a. c.: U1 = 35 V (peak) and U2 = 0.35 V (peak);
   For d. c.: U1 = 1.0 V,
   Note:
   The limit value of U2 = 0.35 V (peak) for a. c. and U1 = 1.0 V for d. c. correspond to the values 0.7 mA (peak) a. c. and 2.0 mA d. c.
   The limit value U1 = 35 V (peak) for a. c. correspond to the value 70 mA (peak) a. c. for frequencies greater than 100 kHz.
7. In case a measurement is out of the limits specified, there is a possibility of a shock hazard, and the equipment should be repaired and rechecked before it is returned to the customer.

Measuring network for TOUCH CURRENTS

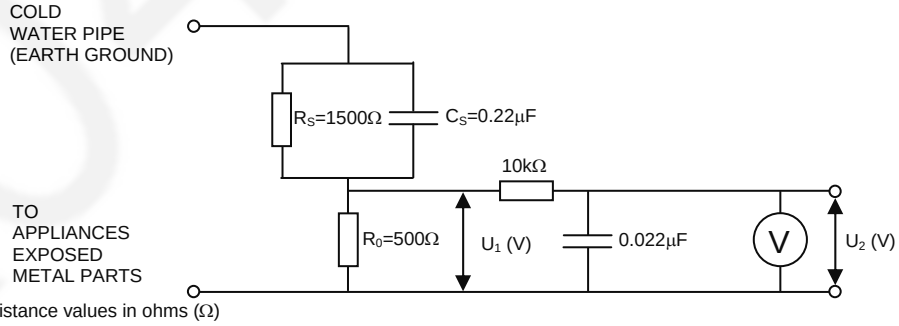


Resistance values in ohms (Ω)

V: Voltmeter or oscilloscope (r.m.s. or peak reading)

Input resistance: ≥ 1MΩ
Input capacitance: ≤ 200pF
Frequency range: 15Hz to 1MHz and d.c.respectively

NOTE – Appropriate measures should be taken to obtain the correct value in case of non-sinusoidal waveforms

**Fig. 2**

# Prevention of Electrostatic Discharge (ESD) to Electrostatically Sensitive (ES) Devices

Some semiconductor (solid state) devices can be damaged easily by static electricity. Such components commonly are called Electrostatically Sensitive (ES) Devices. Examples of typical ES devices are integrated circuits and some field-effect transistors and semiconductor "chip" components. The following techniques should be used to help reduce the incidence of component damage caused by electrostatic discharge (ESD).

1. Immediately before handling any semiconductor component or semiconductor-equipped assembly, drain off any ESD on your body by touching a known earth ground. Alternatively, obtain and wear a commercially available discharging ESD wrist strap, which should be removed for potential shock reasons prior to applying power to the unit under test.
2. After removing an electrical assembly equipped with ES devices, place the assembly on a conductive surface such as aluminum foil, to prevent electrostatic charge build up or exposure of the assembly.
3. Use only a grounded-tip soldering iron to solder or unsolder ES devices.
4. Use only an anti-static solder removal device. Some solder removal devices not classified as "anti-static (ESD protected)" can generate electrical charge sufficient to damage ES devices.
5. Do not use freon-propelled chemicals. These can generate electrical charges sufficient to damage ES devices.
6. Do not remove a replacement ES device from its protective package until immediately before you are ready to install it. (Most replacement ES devices are packaged with leads electrically shorted together by conductive foam, aluminum foil or comparable conductive material).
7. Immediately before removing the protective material from the leads of a replacement ES device, touch the protective material to the chassis or circuit assembly into which the device will be installed.
   Caution
   Be sure no power is applied to the chassis or circuit, and observe all other safety precautions.

8. Minimize bodily motions when handling unpackaged replacement ES devices. (Otherwise harmless motion such as the brushing together of your clothes fabric or the lifting of your foot from a carpeted floor can generate static electricity (ESD) sufficient to damage an ES device).

**IMPORTANT SAFETY NOTICE**

There are special components used in this equipment which are important for safety.
These parts are marked by ⚠ in schematic diagrams, exploded views and replacement parts list. It is essential that these critical parts should be replaced with manufacturer's specified parts to prevent shock, fire, or other hazards. Do not modify the original design without permission of manufacturer.

A04400

# About lead free solder (PbF)

Note: Lead is listed as (Pb) in the periodic table of elements.
In the information below, Pb will refer to Lead solder, and PbF will refer to Lead Free Solder.
The Lead Free Solder used in our manufacturing process and discussed below is (Sn+Ag+Cu).
That is Tin (Sn), Silver (Ag) and Copper (Cu) although other types are available.

This model uses Pb Free solder in it's manufacture due to environmental conservation issues. For service and repair work, we'd suggest the use of Pb free solder as well, although Pb solder may be used.
PCBs manufactured using lead free solder will have the PbF within a leaf Symbol

PbF stamped on the back of PCB.

### Caution

- Pb free solder has a higher melting point than standard solder. Typically the melting point is 50 ~ 70 °F (30~40°C) higher. Please use a high temperature soldering iron and set it to 700 ± 20 °F (370 ± 10 °C).
- Pb free solder will tend to splash when heated too high (about 1100 °F or 600 °C).
  If you must use Pb solder, please completely remove all of the Pb free solder on the pins or solder area before applying Pb solder. If this is not practical, be sure to heat the Pb free solder until it melts, before applying Pb solder.
- After applying PbF solder to double layered boards, please check the component side for excess solder which may flow onto the opposite side. (see Fig.3)

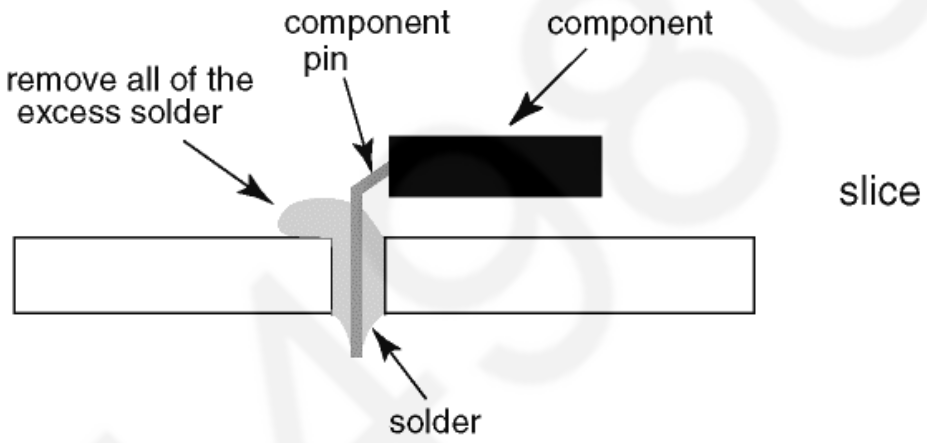


**Fig.3**

### Suggested Pb free solder

There are several kinds of Pb free solder available for purchase. This product uses Sn+Ag+Cu (tin, silver, copper) solder. However, Sn+Cu (tin, copper), Sn+Zn+Bi (tin, zinc, bismuth) solder can also be used. (see Fig.4)

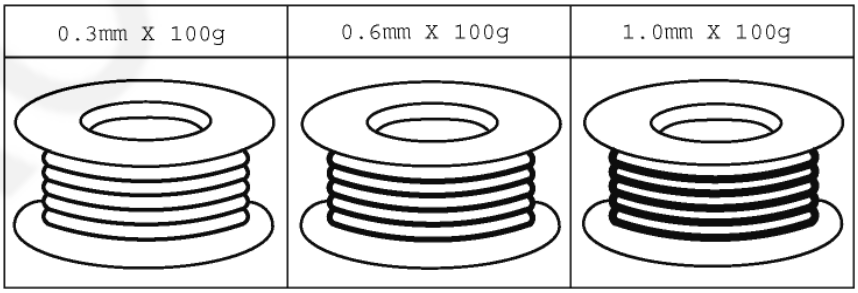


**Fig.4**

# Service Navigation
# Chassis Board Layout

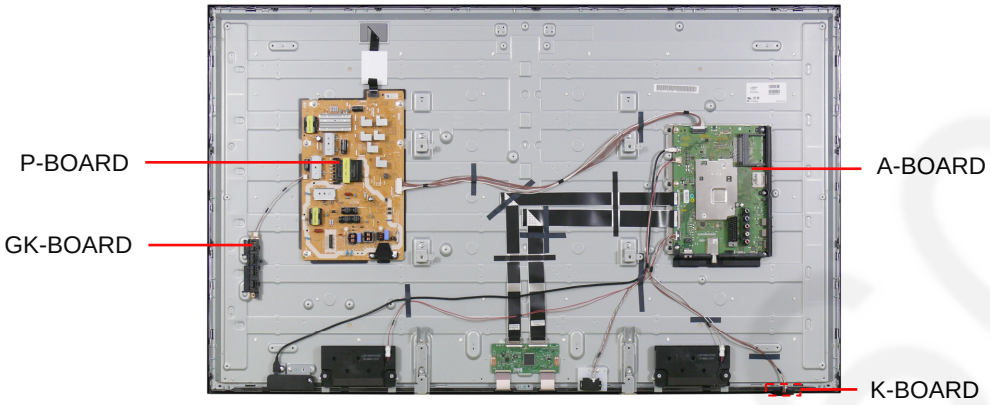


| Board Name | Function |
|---|---|
| A-Board | AV Terminal, HDMI, USB, WIFI, Digital Audio Out, TUNER A/DVB-T/T2/C, DVB-T2/T/C Dem, CI Slot , SD Slot , Peaks IC_LD6, Speaker out, eMMc Memory, STM EEPROM, DDR SDRAM |
| P-Board | Main Input, Power Supply, LED DRIVER |
| K-Board | Remote Receiver, Power and Timer LED, C.A.T.S |
| GK-Board | Key control, Power switch |

A0449280

# Service Hints

## How to remove the backcover

Lay the main unit face down. (see Fig.5)

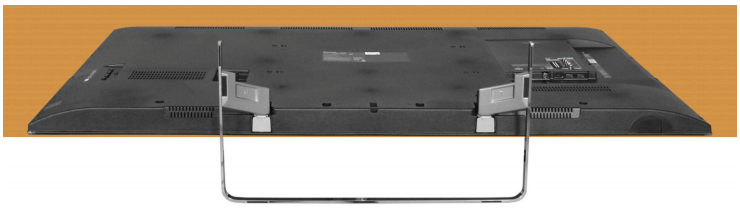

**Fig.5**

Remove the 4 fixing screws and the pedestal assembly. (see Fig.6)

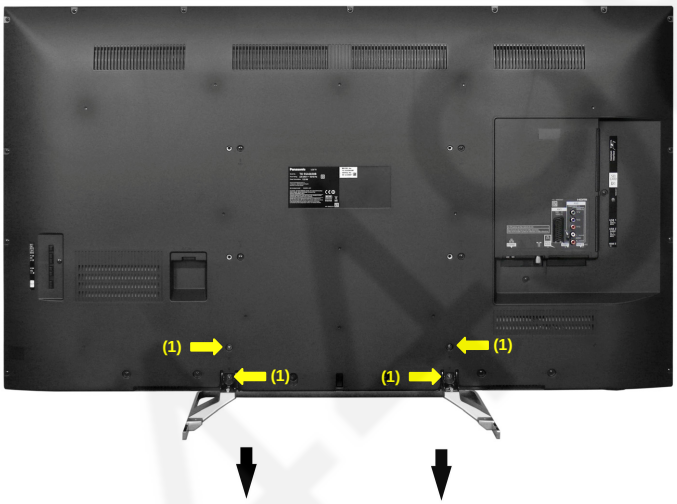


**SCREWS**
**(1) THE5ZL002N /4pcs/**

**Fig.6**

Remove the 27 fixing screws and the backcover. (see Fig.7)

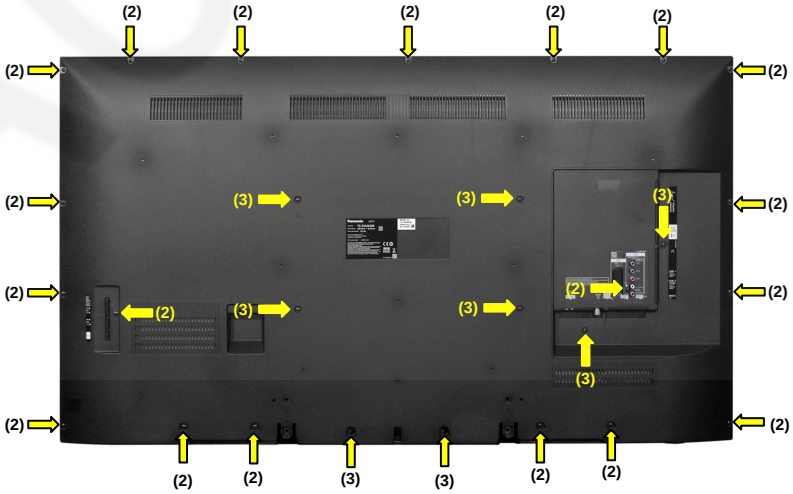


**SCREWS**
**(2) THTD037J /19pcs/**
**(3) THEC1509 /8pcs/**

**Fig.7**

# Applicable Signals

**Component** (Y, Pb, Pr) (from AV2 terminal), **HDMI**

| Signal name | COMPONENT | HDMI |
|---|---|---|
| 525 (480) / 60i,60p | * | * |
| 625 (576) / 50i, 50p | * | * |
| 750 (720) / 60p, 50p | * | * |
| 1,125 (1,080) / 60i, 50i | * | * |
| 1,125 (1,080) / 60p | | * |
| 1,125 (1,080) / 50p | | * |
| 1,125 (1,080) / 24p | | * |

**Note:**

- Signals other than above may not be displayed properly.
- The above signals are reformatted for optimal viewing on your display.

A0449860

# Specifications

| | |
|---|---|
| **Power Source:** | 220-240V AC, 50 / 60Hz |
| **Rated Power Consumption:** | 133W |
| **Stand-by Power Consumption:** | 0.20W |
| **Aerial Impedance:** | 75Ω unbalanced, Coaxial Type |

**Receiving System:**

**55AS650B (UK)**

| | |
|---|---|
| DVB-T/T2 | Digital terrestrial services (MPEG2 and MPEG4-AVC(H.264)) |
| PAL I | UHF E21-E68 |
| PAL 525/60 | (AV only) |
| M.NTSC | (AV only) |
| NTSC | (AV only) |

**55AS650B (Ireland)**

| | |
|---|---|
| DVB-T/T2 | Digital terrestrial services (MPEG2 and MPEG4-AVC(H.264)) |
| PAL I | VHF A-J<br>UHF E21-E69<br>CATV S1-S20<br>CATV S21-S41(Hyperband) |
| PAL 525/60 | (AV only) |
| M.NTSC | (AV only) |
| NTSC | (AV only) |

**55AS650E**

| | | |
|---|---|---|
| DVB-T/T2 | Digital terrestrial services (MPEG2 and MPEG4-AVC(H.264)) | |
| DVB-C | Digital cable services (MPEG2 and MPEG4-AVC(H.264)) | |
| PAL I/H, B/G,<br>SECAM B/G, L/L' | VHF E2-E12<br>VHF A-H ( ITALY )<br>CATV (S01-S05)<br>CATV S11-S20 (U1-U10) | VHF H1-H2 ( ITALY )<br>UHF E21-E69<br>CATV S1-S10(M1-M10)<br>CATV S21-S41 (HYPERBAND) |
| PAL D/K,<br>SECAM D/K | VHF R1-R2<br>VHF R6-R12 | VHF R3-R5<br>UHF E21-E69 |
| PAL 525/60 | (AV only) | |
| M.NTSC | (AV only) | |
| NTSC | (AV only) | |

| **Aerial - Rear:** | **55AS650B (UK)** | **55AS650B (Ireland)** | **55AS650E** |
|---|---|---|---|
| | UHF | VHF/UHF | VHF/UHF |

**Operating Conditions:**

Temperature: 0°C ÷ 35°C
Humidity: 20% ÷ 80% RH (non condensing)

**Terminals:**

| | | |
|---|---|---|
| AV1 IN | Video (21 pin) | 1V p-p 75Ω |
| | Audio (21 pin) | 500mV rms 10kΩ |
| | RGB (21 pin) | 0.7V p-p 75Ω |
| AV1 OUT | Video (21 pin) | 1V p-p 75Ω |
| | Audio (21 pin) | 500mV rms 1kΩ |
| AV2 IN | Video (RCAx1) | 1V p-p 75Ω |
| (COMPONENT/VIDEO) | Audio (RCAx2) | 500mV rms 10kΩ (used for HDMI_ AV2 audio IN) |
| | Video (RCAx3) | Y:1V p-p 75Ω (including synchronisation)<br>Pb/Cb, Pr/Cr: ±0.35V p-p 75Ω |

| | |
|---|---|
| HDMI1, HDMI2, HDMI3 | Type A Connectors<br>HDMI 1/3 : 3D, Content Type<br>HDMI 2 : 3D, Content Type, Audio Return Channel<br>This TV supports "HDAVI Control 5" function. |
| DIGITAL AUDIO OUT | PCM / Dolby digital / DTS, Fibre optic |
| USB 1/2 | DC 5V Max 500mA [Hi-Speed USB (USB 2.0)] |
| ETHERNET | RJ45, IEEE802.3 10BASE-T / 100BASE-TX |
| CARD SLOT | SD Cart slot x 1<br>Common interface slot (Complies with CI+) x1 |

A04-0860

**Wireless LAN:**

| | |
|---|---|
| Standard Compliance | IEEE802.11a/n , IEEE802.11b/g/n |
| Frequency Range | IEEE802.11a/n: 5.180 GHz – 5.320 GHz<br>5.500 GHz – 5.580 GHz<br>5.660 GHz – 5.700 GHz<br>IEEE802.11b/g/n: 2.412 GHz – 2.472 GHz |
| Security | WPA2-PSK (TKIP/AES)<br>WPA-PSK (TKIP/AES)<br>WEP(64 bit/128 bit) |

**Bluetooth wirelless technology:**

| | |
|---|---|
| Standard Compliance | Bluetooth 3.0 |
| Frequency Range | 2.402 GHz – 2.480 GHz |

**3D Eyewear:**

| | |
|---|---|
| Dimensions (W x H x D) | 165mm x 38m x 166mm |
| Mass | 18g |
| Lens Type | Circularly-polarised filter |
| Usage Temperature Range | 0°C ÷ 40°C |
| Materials | Main body / Lens section: Resin |

| | |
|---|---|
| **LCD screen:** | L5EDDYY00568<br>1920 x 1080, 16:9<br>Visible Diagonal 1390mm |
| **Audio Output:** | 20W (2 x 10W) |
| **Headphones:** | 3.5mm, 8Ω Impedance |
| **Accessories supplied :** | Remote Control<br>Touch Pad Remote Control<br>2 x R03 Batteries<br>2 x R6 (UM3) Batteries<br>3D Glasses |

**Dimensions:**

| | Width: | Height: | Depth: |
|---|---|---|---|
| Including TV stand | 1244mm | 767mm | 292mm |
| TV set only | 1244mm | 722mm | 54mm |

**Mass:**

| | |
|---|---|
| Including TV stand | 19.5kg |
| TV set only | 18.5kg |

Design and Specifications are subject to change without notice. Mass and dimensions shown are approximate.
This equipment complies with the EMC standards listed below:
EN55013, EN61000-3-2, EN61000-3-3, EN55020, EN55022, EN55024

A049860

# Technical Description

## Specification of KEY for DTCP-IP, C2MOD, CI Plus, DIMORA, HDCP2, Netflix, Widevine, Freetime

## General information:

1. eMMc Memory(IC8903) for spare parts has the seed of KEY for each.
2. The final KEY data will be generated by LD6 IC (IC8000) when SELF CHECK was done and are stored in both LD6 IC (IC8000) and eMMc (IC8903).
   All KEYs are not generated for all models.
   The necessary KEY are only generated and stored depend on the feature of models.

## Replacement of ICs:

When LD6 IC (IC8000) is replaced, eMMc (IC8903) should be also replaced with new one the same time.
When eMMc Memory(IC8903) is replaced, LD6 IC (IC8000) is not necessary to be replaced the same time.
After the replacement of IC, SELF CHECK should be done to generate the final KEY data.
How to SELF CHECK: While pressing [VOLUME ( - )] button on the main unit, press the **MENU** button on the remote control for more than 3 seconds.
TV will be forced to the factory shipment setting after this SELF CHECK.

## Model and Keys:

| Model No. | Keys | | | | | | |
|---|---|---|---|---|---|---|---|
| | DTCP-IP | C2MOD | CI PLUS | DIMORA | HDCP2 | Netflix Widevine | Freetime |
| TX-55AS650B | Yes | Yes | Yes | Yes | Yes | Yes | Yes |
| TX-55AS650E | Yes | Yes | Yes | Yes | Yes | Yes | None |

## USB HDD Recording:

## General information:

Digital TV programmes can be recorded in USB HDD.
C2MOD key generated in A-board by SELF CHECK binds TV and USB-HDD for communication.
That key is only one key for them. If the key is difference, TV can not access USB-HDD.

**Caution:**
New key will be generated by following SELF CHECK and previous TV programmes recorded in USB HDD will not be viewed.
SELF CHECK: While pressing [VOLUME ( - )] button on the main unit, press the **MENU** button on the remote control for more then 3 seconds.

# Setting Inspection
## Voltage Confirmation

**A board**

| Description | Test point | Voltage |
|---|---|---|
| PNL12V | TP4000,TP4001 | 12V ± 1.2V |
| SUB5V | TP8704 | 5.17V ± 0.25V |
| SUB3.3V | TP8705 | 3.39V ± 0.15V |
| HDMI3.3V | TP8710 | 3.3V ± 0.17V |
| SUB_AI_3.3V | TP2206 | 3.3V ± 0.17V |
| EU_TU_1.8V | TP5704 | 1.84V ± 0.1V |
| SUB1.5V | TP8101 | 1.52V ± 0.08V |
| SUB1.1V | TP8100 | 1.21V ± 0.06V |
| USB-WIFI | TP8620 | 5.3V + 0.15V/-0.2V |
| LNB_PWR_M | TP6703 | 18V ± 1.0V |
| LNB_PWR_S | TP6702 | 18V ± 1.0V |
| SUB9V | TP5004 | 9.0V ± 0.4V |
| WOL3.3V | TP8712 | 3.3V ± 0.17V |
| SD3.3V | TP8617 | 3.34V ± 0.17V |
| DMD_1.1V | TP5703 | 1.12V ± 0.11V |
| SUB_CI_5V | TP8400 | 5.0V ± 0.5V |
| USB1 | TP8615 | 5.0V ± 0.25V |
| USB2 | TP8611 | 5.0V ± 0.25V |
| PHYRSTB | TP8624 | 3.3V ± 0.17V |
| WOL_ON_IRQ | TP8619 | 3.3V ± 0.17V |
| RMII_RXD[1] | TP8618 | 0V -> 3.3V ± 0.17V |

**P board**

| Description | Test point | Voltage* | Voltage** |
|---|---|---|---|
| 24V | TP7409 and GND | <1V | 24V ± 1.2V |
| 16V | TP7410 and GND | <1V | 15.7V ± 0.6V |
| 5VS | TP7501 and GND | 5.2V ± 0.2V | 5.2V ± 0.2V |
| PFC | TP7201 and GND TP7203 | <340V | 390V ± 15V |

* Connect AC 230V to JK7101 connector (Main switch is OFF).
** Connect DC 3.3V to TV_SUB_ON P2 connector – pin 9 /TP7416/ or set main switch is ON.

A04-9950

# Service Mode Function

MPU controls the functions switching for each IICs through IIC bus in this chassis. The following setting and adjustment can be adjusted by remote control in Service Menu

## How to enter into Service Mode

While pressing [VOLUME ( - )] button on the main unit, press the [RED] button on the remote control for 3 times within 2 seconds.

## How to exit

Switch off the power with the [POWER] button on the main unit or the [POWER] button on the remote control.

A0449860

# SERVICE

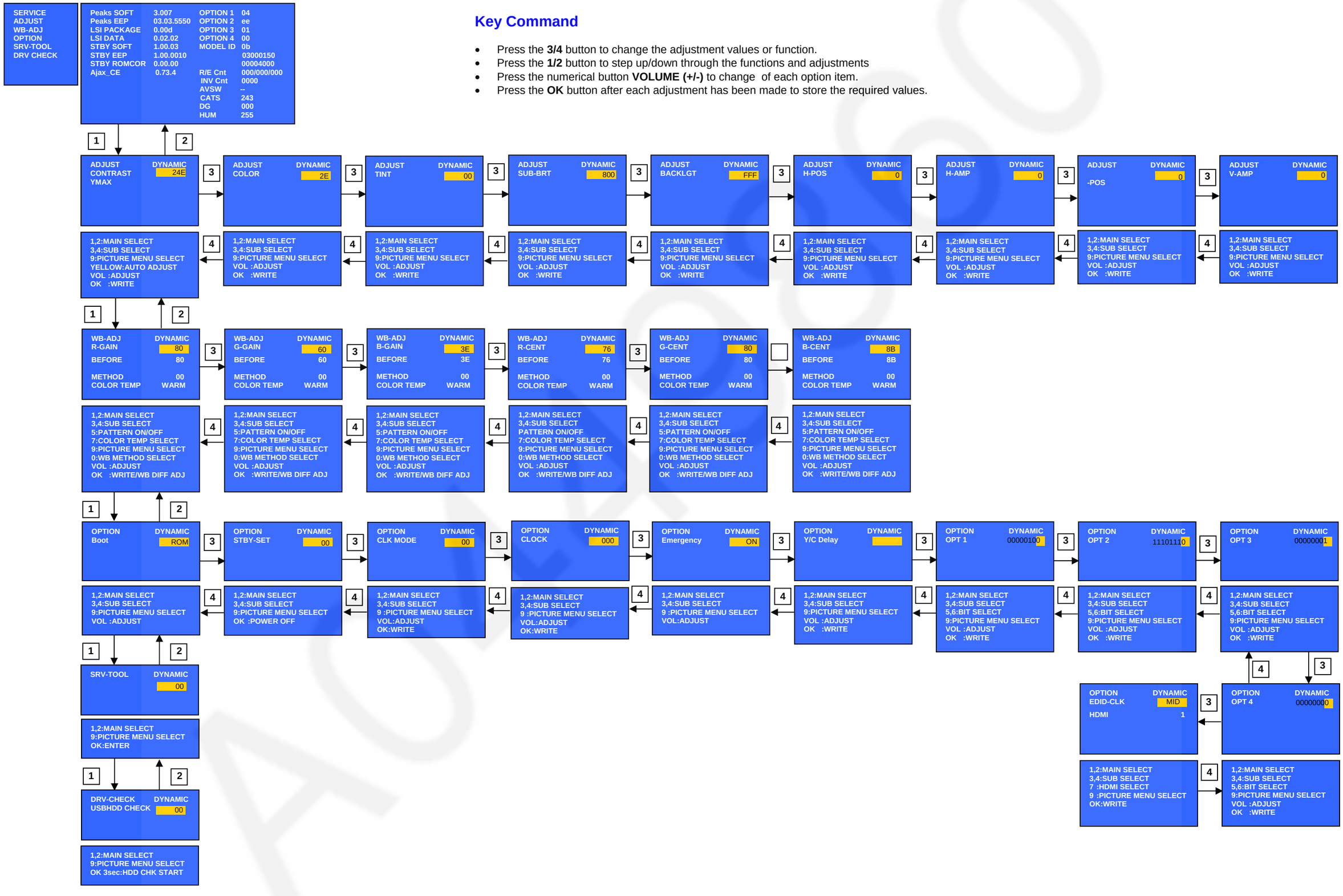


## Key Command

- Press the **3/4** button to change the adjustment values or function.
- Press the **1/2** button to step up/down through the functions and adjustments
- Press the numerical button **VOLUME (+/-)** to change of each option item.
- Press the **OK** button after each adjustment has been made to store the required values.

# Service Tool Mode

## How to access

1. Select [SRV-TOOL] in Service Mode.
2. Press [OK] button on the remote control.

| | | | |
|---|---|---|---|
| | SRV-TOOL | | |
| | | | |
| | | | |
| | | | |
| | | | |
| Display of Flash ROM maker code → | Flash ROOM: AD – F1 | | |
| Display of SOS History → | PTCT:00.00.00.00.00 | Time 00051:30 On/Off 0000042 | ← POWER ON TIME/COUNT Press [MUTE] button (3sec) |
| | | | |

## Display of SOS History

SOS History (Number of LED blinking) indication.
From left side; Last SOS, before Last, three occurrence before, 2nd occurrence after shipment, 1st occurrence after shipment.
This indication will be cleared by [Self/check indication and forced to factory shipment setting].

## Power ON Time, On/Off

Note: To display TIME/COUNT menu, highlight position, then press MUTE for 3sec.
Time: Cumulative power on time, indicated hour: minute by decimal.
On/Off: Number of On/Off switching by decimal.
Note: This indication will not be cleared by either of the self-checks or any other command.

## Exit

Disconnect the AC cord from wall outlet or switch off the power with [Power] button on the main unit.

A0449860

# Hotel Mode

1. Purpose
   Restrict a function for hotels.
2. Access command to the Hotel mode setup menu.
   In order to display the Hotel mode setup menu,
   please enter the following command (within 2 second).
   [TV] : Vol.[Down] + [REMOTE] : AV (3 times)

   Then, the Hotel mode setup menu is displayed.

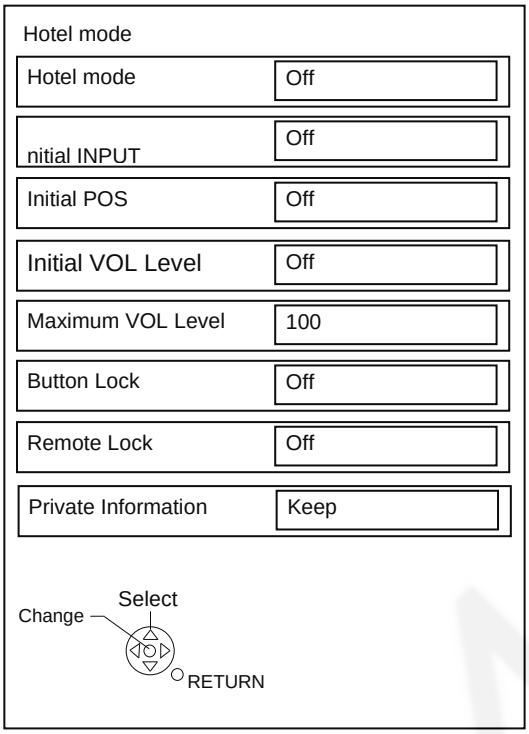


| ITEM | Function |
|---|---|
| Hotel Mode | Select hotel mode ON/OFF |
| Initial INPUT | Select input signal modes.<br>Set the input, when each time power is switched on.<br>Selection:<br>Off/Analog/DVB/AV1/AV2/HDMI1/HDMI2/HDMI3<br>*Off: give priority to the last memory. However, Euro Model is compulsorily set to TV. |
| Initial POS | Select programme number.<br>Selection:<br>Off/0 to 99<br>*Off: give priority to the last memory |
| Initial VOL Level | Adjust the volume when each time power is switched on.<br>Selection/Range:<br>Off/0 to 100<br>*Off: give priority to the last memory |
| Maximum VOL Level | Adjust maximum volume.<br>Range:<br>0 to 100 |
| Button Lock | Select local key conditions.<br>Selection:<br>Off/SETUP/MENU<br>*Off: altogether valid<br>*Setup: only F-key is invalid<br>(Tuning guide (menu) can not be selected.)<br>*MENU: only F-key is invalid<br>(only Volume/Mute can be selected.) |
| Remote Lock | Select remote control key conditions.<br>Selected"<br>Off/SETUP/MENU<br>*Off: altogether valid<br>*Setup: only Setup menu is invalid<br>MENU: Picture/Sound/Setup menu are invalid |
| Private Information | Select private information for VIERA Cast is Keep or Reset if Hotel mode is set to [On] when TV power on.<br>Selection :<br>Keep/Reset<br>•Keep: private information for VIERA Cast is keep<br>•Reset: private information for VIERA Cast is reset |

3. To exit the "Hotel mode":
   Switch off the power with the [POWER] button
   on the main unit or the [POWER] button
   on the remote control or pressing [EXIT] button
   on the remote control.

4. Explain the Hotel mode setup menu.

A04-GB

# Data Copy by USB Memory

## Purpose

### a) Board replacement (Copy the data when exchanging A-board):

When exchanging A-board, the data in original A-board can be copied to USB Memory and then copy to new A-board.

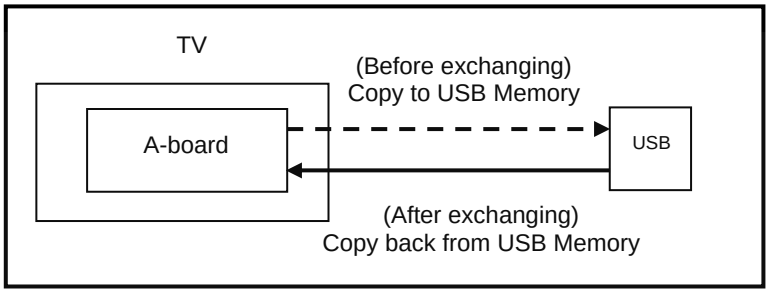


Following data can be copied.
User setting data
(inc. Hotel mode setting data)
Channel scan data
Adjustment and factory preset data

### b) Hotel (Copy the data when installing a number of units in hotel or any facility):

When installing a number of units in hotel or any facility, the data in master TV can be copied to USB Memory and the copy
to other TVs.

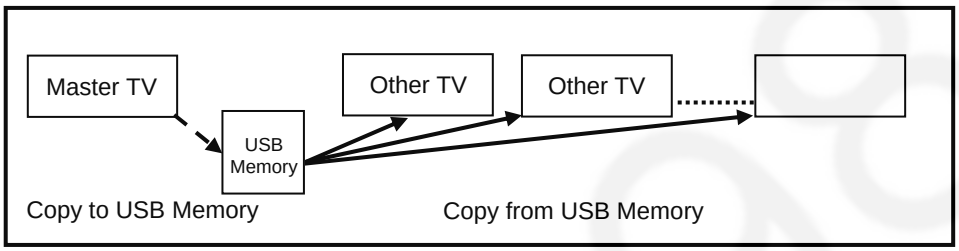


Following data can be copied.
User setting data
(inc. Hotel mode setting data)
Channel scan data

## Preparation

Make pwd file as startup file for (a) or (b) in an empty USB Memory.

1. Insert an empty USB Memory to your PC.
2. Right-click a blank area in a USB Memory window, point to New, and then click text document. A new file is created by default (New Text Document.txt).
3. Right-click the new text document that you just created and select rename, and then change the name and extension of the file to the following file name (a) or (b) and press ENTER.

File name:

(a) For Board replacement: boardreplace.pwd
(b) For Hotel: hotel.pwd

Note:

Please make only one file to prevent the operation error.
No any other file should be in USB Memory.

# Data Copy from TV set to USB Memory

1. Turn on the TV set.
2. Insert USB Memory with a startup file (pwd file) to USB Terminal.
   On-screen Display will be appeared according to the startup file automatically.
3. Input a following password for (a) or (b) by using remote control.
   (a) For Board replacement: 2770
   (b) For Hotel: 4850
   Data will be copied from TV set to USB Memory.
   It takes around 2 to 6 minutes maximum for copying.
4. After the completion of copying to USB Memory, remove USB Memory from TV set.
5. Turn off the TV set.

Note:

Following new folder will be created in USB Memory for data from TV set.

(a) For Board replacement: user_setup

(b) For Hotel: hotel

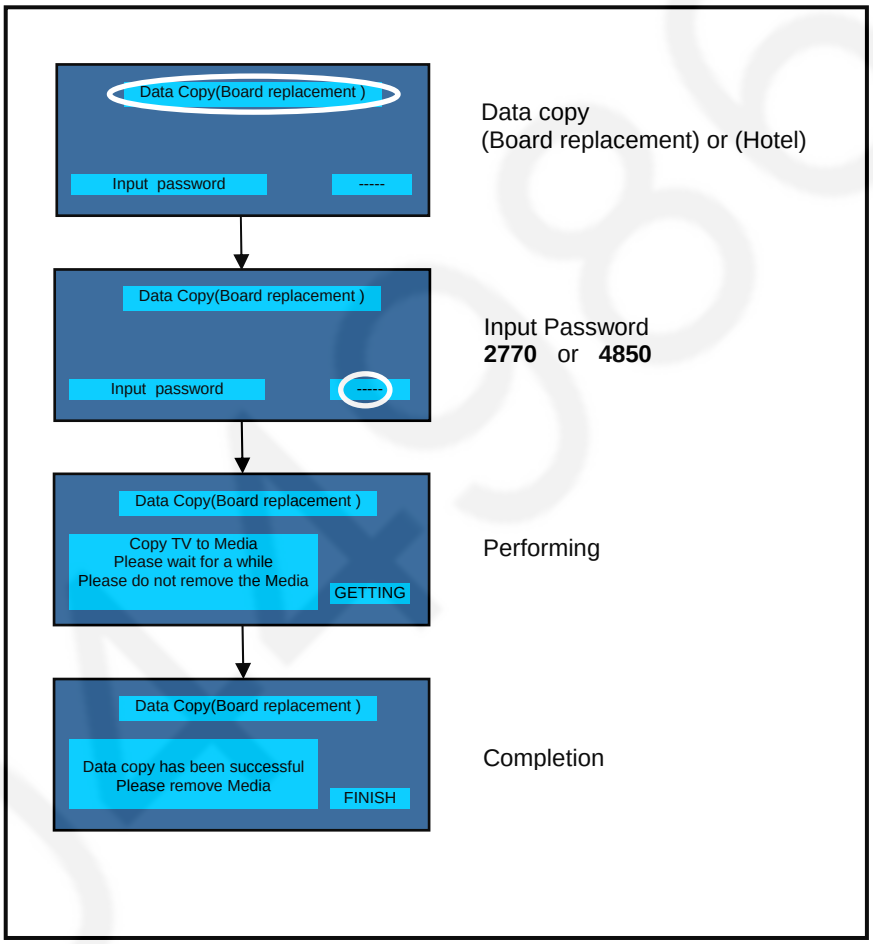

# Data Copy from USB Memory to TV set

1. Turn on the TV set.
2. Insert USB Memory with Data to USB Terminal.
   On-screen Display will be appeared according to the Data folder automatically.
3. Input a following password for (a) or (b) by using remote control.
   (a) For Board replacement: 2771
   (b) For Hotel: 4851
   Data will be copied from USB Memory to TV set.
4. After the completion of copying to USB Memory, remove USB Memory from TV set.
   (a) For Board replacement: Data will be deleted after copying (Limited one copy).
   (b) For Hotel: Data will not be deleted and can be used for other TVs.
5. Turn off the TV set.

Note:

1. Depending on the failure of boards, function of Data for board replacement does not work.
2. This function can be effective among the same model numbers.

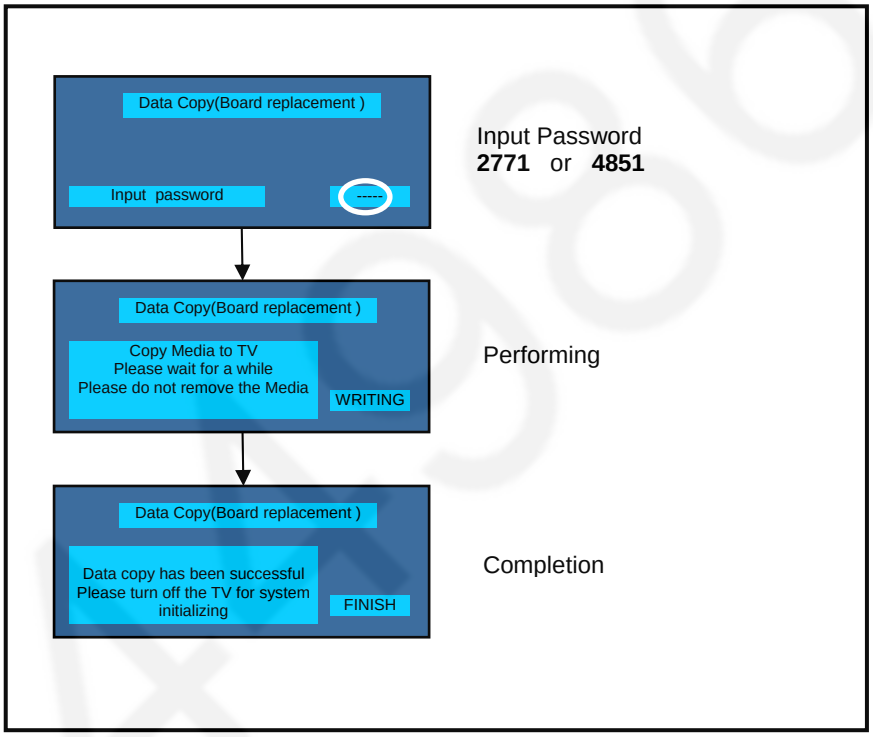

# Option Bytes Description

| | | | |
|---|---|---|---|
| OPTION1 | | | |
| | b1 | TEXT Ch Refresh | ON (1) / OFF (0) |
| | b2 | ID-1 | ON (1) / OFF (0) |
| | b3 | Macrovision Auto-judge | ON (1) / OFF (0) |
| | b4 | Reserved | - |
| | b5 | Reserved | - |
| | b6 | Enable HDMI force reset | ON (1) / OFF (0) |
| | b7 | Reserved | - |
| OPTION2 | | | |
| | b0 | Adjust Igain enable | ON (1) / OFF (0) |
| | b1 | A2 BG enable (5.5MHz) | ON (1) / OFF (0) |
| | b2 | A2 DK1 enable (6.26MHz) | ON (1) / OFF (0) |
| | b3 | A2 DK3 enable (5.742MHz) | ON (1) / OFF (0) |
| | b4 | NICAM scan | ON (1) / OFF (0) |
| | b5 | NICAM BG enable (5.5MHz) | ON (1) / OFF (0) |
| | b6 | NICAM I enable (6.0MHz) | ON (1) / OFF (0) |
| | b7 | NICAM DK enable (6.5MHz) | ON (1) / OFF (0) |
| OPTION3 | | | |
| | b0 | NICAM priority | ON (1) / OFF (0) |
| | b1 | Reserved | - |
| | b2 | Reserved | - |
| | b3 | A2 DK2 enable | ON (1) / OFF (0) |
| | b4 | Inhibition of countermeasure for SIF signal drop | ON (1) / OFF (0) |
| | b5 | Get onid from physical CH (CHINA) | ON (1) / OFF (0) |
| | b6 | SSU search enable for HOTEL model | ON (1) / OFF (0) |
| | b7 | SASO mute (ASIA) | ON (1) / OFF (0) |
| OPTION4 | | | |
| | b0 | Countermeasure for Taiwan NTSC noise sound | ON (1) / OFF (0) |
| | b1 | Enable Compatible with Video and Sound for Analog VIF | ON (1) / OFF (0) |
| | b2 | 3DYC color motion detect | ON (1) / OFF (0) |
| | b3 | RF Clamp Current minimum (TAIWAN) | ON (1) / OFF (0) |
| | b4 | Reserved | - |
| | b5 | Reserved | - |
| | b6 | Reserved | - |
| | b7 | Enable workaround for Polsat CAM problem (POLAND) | ON (1) / OFF (0) |
| OPTION16 | | | |
| | b0 | PIP (derivate models) | ON (1) / OFF (0) |
| | b1 | “Bass Boost” sound menu enable (derivate models) | ON (1) / OFF (0) |
| | b2 | “Digital Remaster” sound menu enable (derivate models) | ON (1) / OFF (0) |
| | b3 | “XR-Audio Pro Surround” sound menu enabel (derivate models) | ON (1) / OFF (0) |
| | b4 | “Ambience” sound menu enable (derivate models) | ON (1) / OFF (0) |
| | b5 | Reserved | - |
| | b6 | Reserved | - |
| | b7 | Reserved | - |

# Self Check

## How to access

Self-check indication only:
While pressing [VOLUME ( - )] button on the main unit, press [OK] button on the remote control.

Self-check indication and forced to factory shipment setting:
While pressing [VOLUME ( - )] button on the main unit, press [MENU] button on the remote control for more than 3 seconds.

## How to exit

Switch off the power with the [POWER] button on the main unit.

**TX-55AS650B**

55FHD
Self Check Complete

| | | | | | |
|---|---|---|---|---|---|
| H14TUN | O.K. | PEAKS-SOFT | 3.007 | MODEL ID | 0B |
| H90STBY | O.K. | PEAKS-EEP | 03.03.5550 | | 03000150 |
| H92MEM1 | O.K. | LSI-PACKAGE | 0.00d | | 00004000 |
| H91MEM2 | O.K. | LSI-RELEASE | 1.03 | | |
| H17LAN | O.K. | STBY-SOFT | 1.00.02 | | |
| H00FE | O.K. | STBY-EEP | 1.00.0010 | | |
| H96ID | O.K. | | | | |
| H97ID2 | O.K. | | | | |
| H45BT | O.K. | | | | |
| H42WIFI | O.K. | | | | |

**TX-55AS650E**

55FHD
Self Check Complete

| | | | | | |
|---|---|---|---|---|---|
| H14TUN | O.K. | PEAKS-SOFT | 3.007 | MODEL ID | 0B |
| H90STBY | O.K. | PEAKS-EEP | 03.03.5551 | | 03000151 |
| H92MEM1 | O.K. | LSI-PACKAGE | 0.00d | | 00004000 |
| H91MEM2 | O.K. | LSI-RELEASE | 1.03 | | |
| H17LAN | O.K. | STBY-SOFT | 1.00.02 | | |
| H00FE | O.K. | STBY-EEP | 1.00.0010 | | |
| H96ID | O.K. | | | | |
| H97ID2 | O.K. | | | | |
| H45BT | O.K. | | | | |
| H42WIFI | O.K. | | | | |

| Display | Ref. No. | Description | P.C.B. |
|---|---|---|---|
| H14TUN | TU6705 | TUNER A/DVB-T/T2/C | A-Board |
| H90STBY | IC8000 | IC Peaks-LD6 | A-Board |
| H92MEM1 | IC8901 | EEPROM STM | A-Board |
| H91MEM2 | IC8903 | eMMc Memory | A-Board |
| H17LAN | IC8903 | MAC | A-Board |
| H00FE | IC6800 | DVB-T2/T/C Demodulator | A-Board |
| H96ID | IC8903 | CI+,DTCP-IP, C2MOD | A-Board |
| H97ID2 | IC8903 | Dimora, HDCP2, Netflix, Widevine,Freetime* | A-Board |
| H45BT | IC8000<br>IC8601<br>N5HZZ0000130 | IC Peaks-LD6<br>USB HUB<br>BTDongle | A-Board<br>BT Dongle |
| H42WIFI | IC8000<br>N5HBZ0000109 | IC Peaks-LD6<br>Wifi Dongle | A-Board<br>Wifi Dongle |

*Only for TX-55AS650B

If the CCU ports have been checked and found to be incorrect or not located then " - - " will appear in place of "O.K.".

# Power LED blinking timing chart

1. Subject
   Information of LED Flashing timing chart.

2. Contents
   When abnormality has occurred the unit, the protection circuit operates and reset to the stand by mode. At this time, the defective block can be identified by number of blinking of the Power LED on the front panel of the unit.

| Blinking times | Blinking timing | Contents | Check point |
|---|---|---|---|
| 1 | 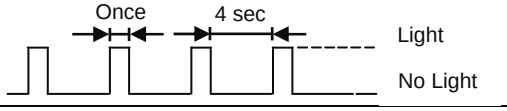 | BL_SOS | A BOARD<br>P BOARD<br>PANEL |
| 3 | | IROM SOS | A BOARD |
| 7 | 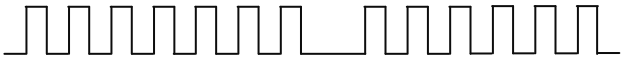 | SUB3.3V | A BOARD |
| 8 | | SOS | A BOARD<br>PANEL |
| 9 | | SOUND_SOS | A BOARD |
| 12 | | BE_SOS | A BOARD |
| 13 | | EMERGENCY | A BOARD |

# LCD Panel Test Mode

## Purpose:

To find the possible failure point where in LCD Panel or Printed Circuit Board when the abnormal picture is displayed.

## How to Enter:

While pressing [VOLUME ( - )] button of the main unit, press [YELLOW] button of the remote control three times.

## How to Exit:

Switch off the power with the [POWER] button on the main unit or the [POWER] button on the remote control.

## How to confirm:

If the abnormal picture is displayed, go into LCD Panel test mode to display the several test patterns.
And then, judge by the following method.
Still abnormal picture is displayed: The cause must be in LCD Panel.
Normal picture is displayed: The cause must be in A board.

## Remarks:

The test pattern is created by the circuit in LCD Panel.
In LCD Panel test mode, this test pattern is displayed unaffected by signal processing for RF or input signal.
If the normal picture is displayed, LCD Panel must be okay and the cause of failure must be in A board.

# Wiring Diagram

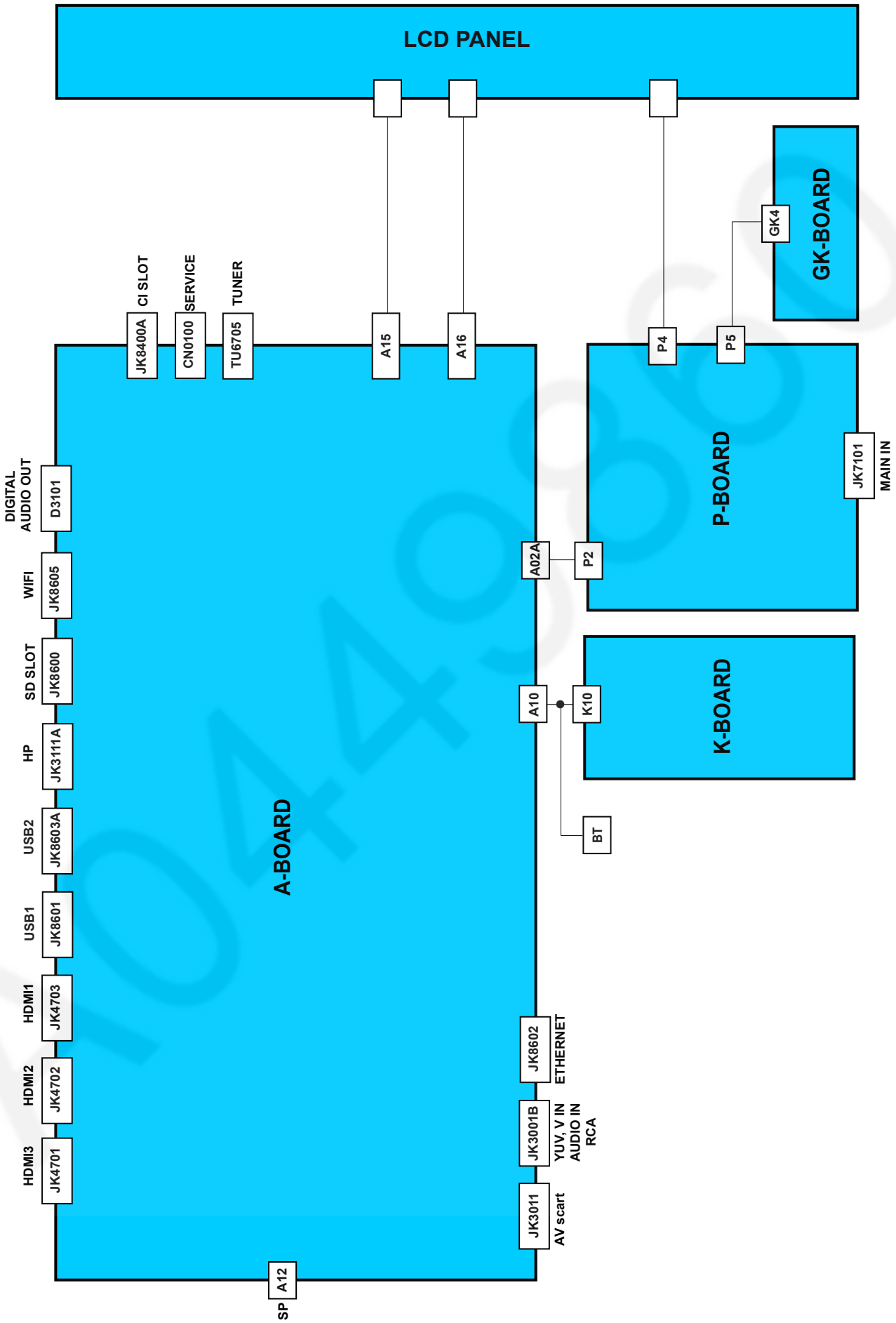

# Block Diagram (1/2)

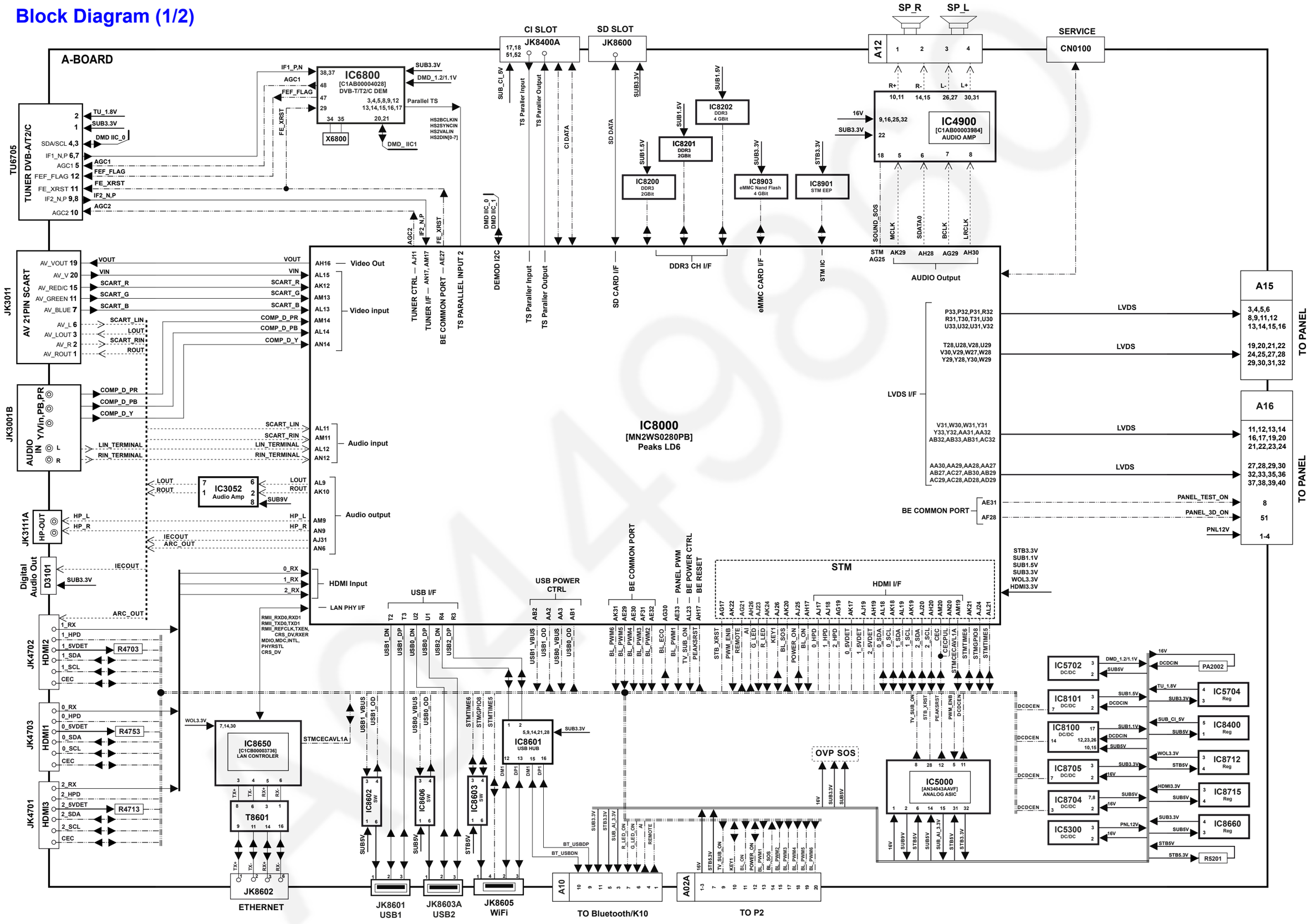

# Block Diagram (2/2)

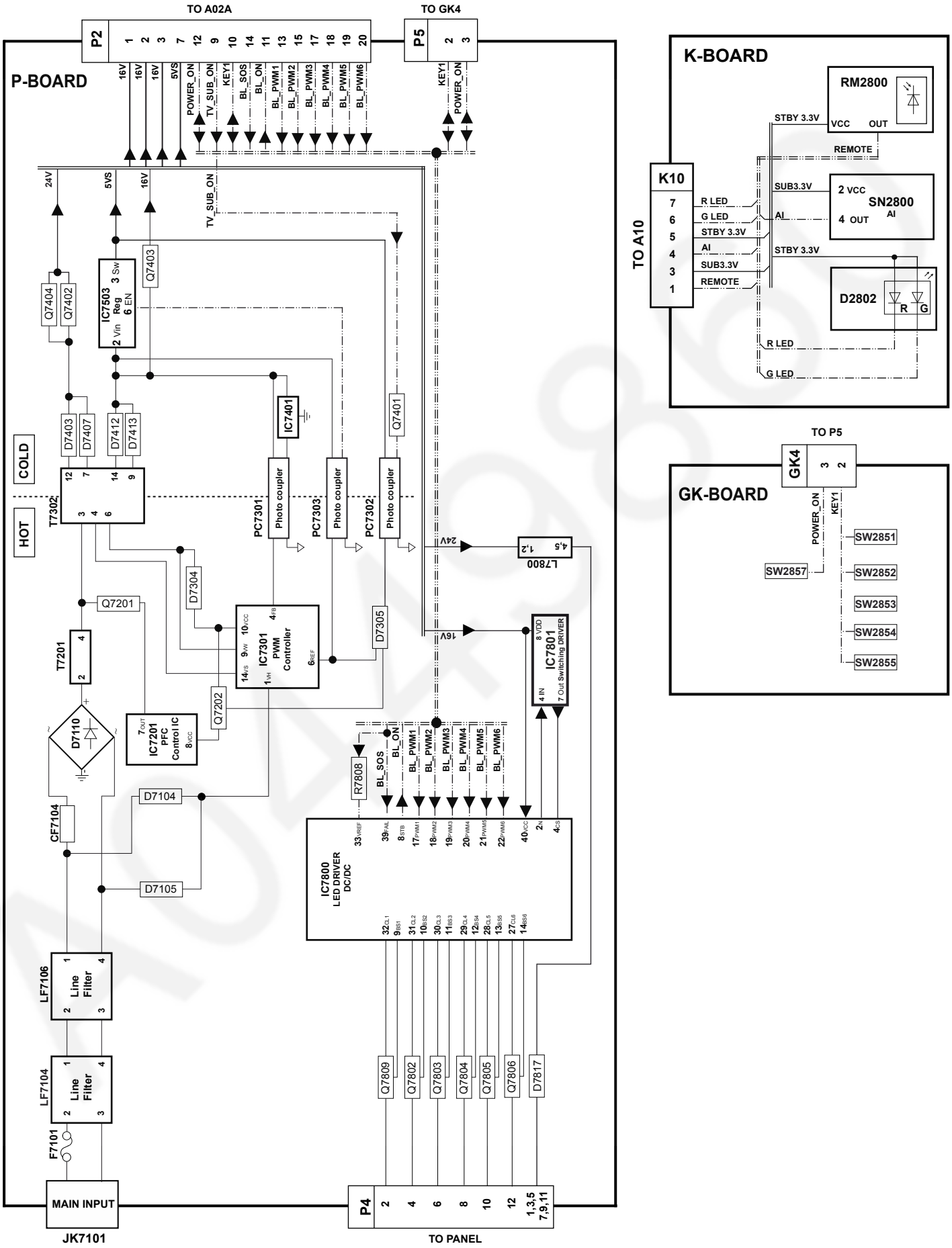

# Parts Location

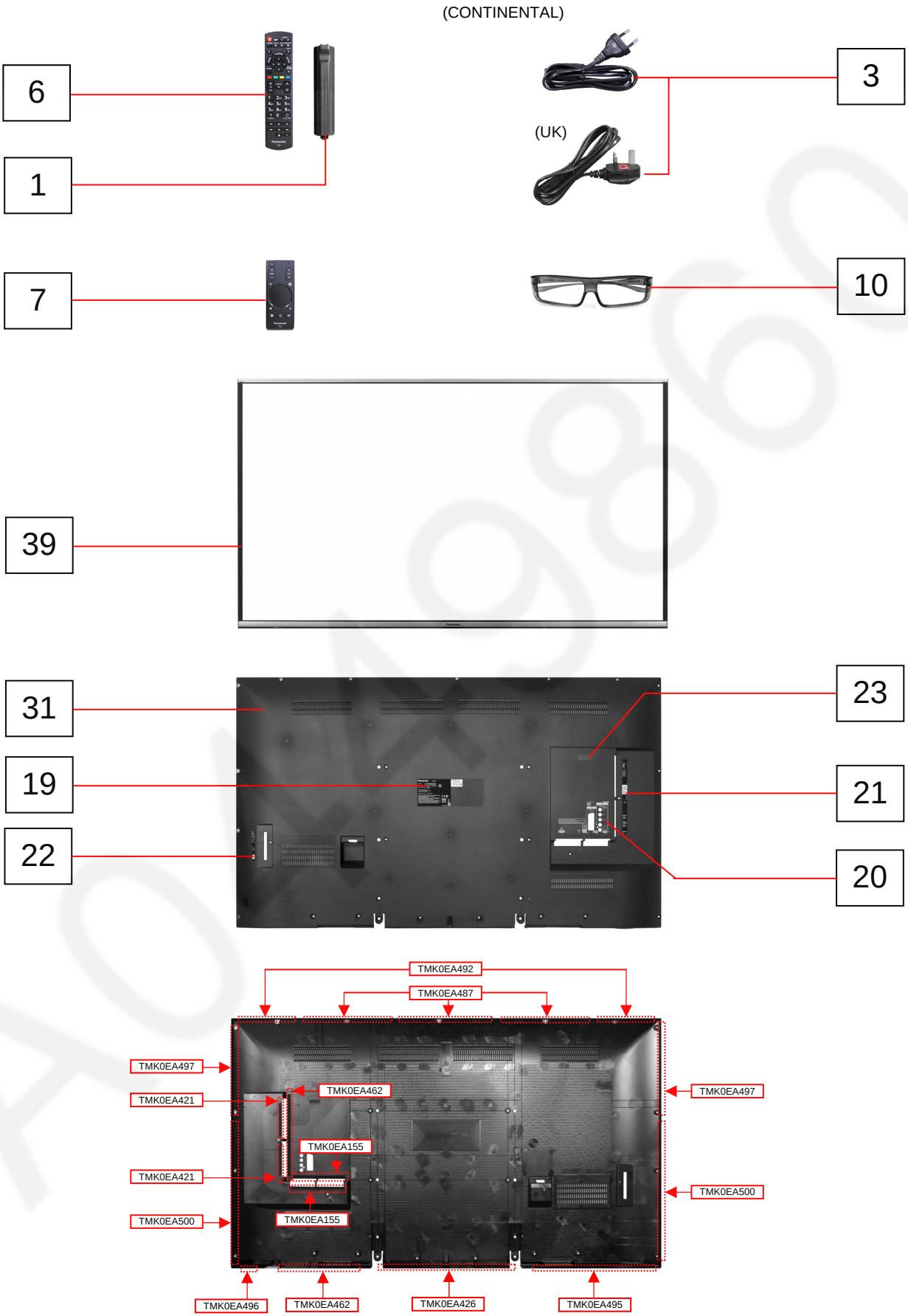

## Parts Location

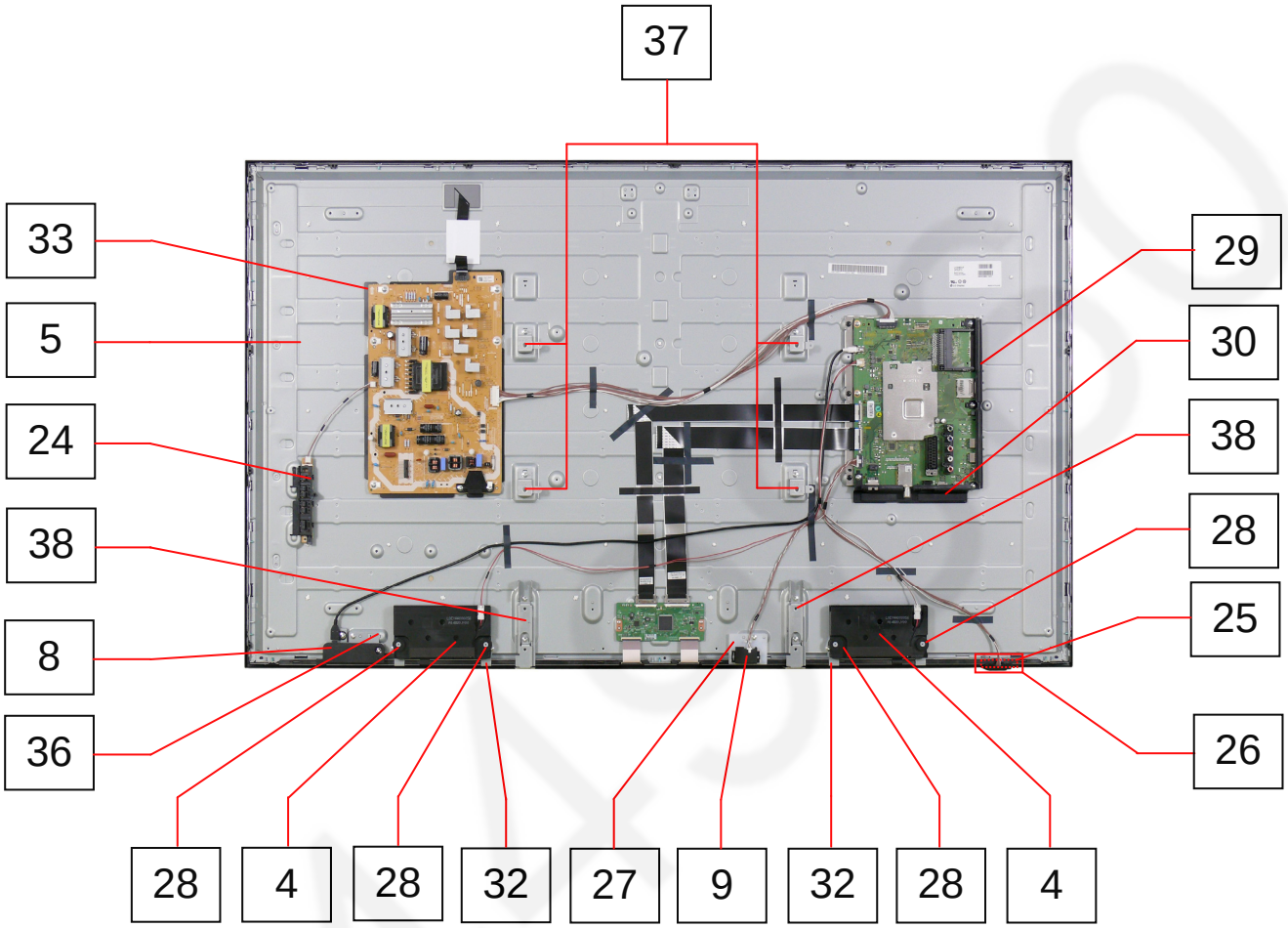


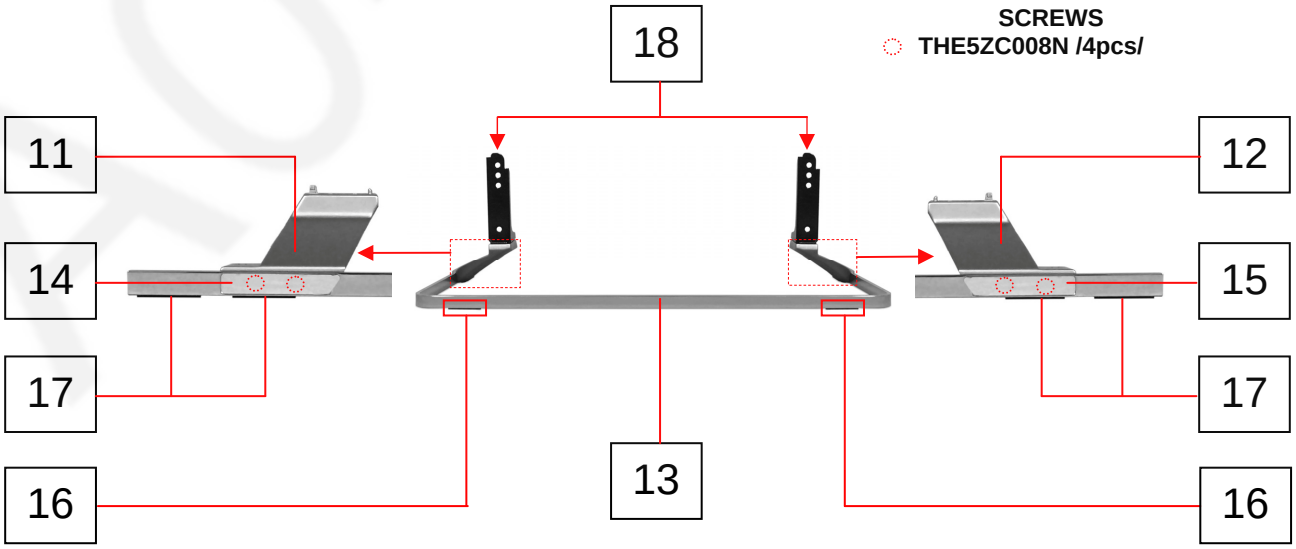

# Location of Lead Wiring

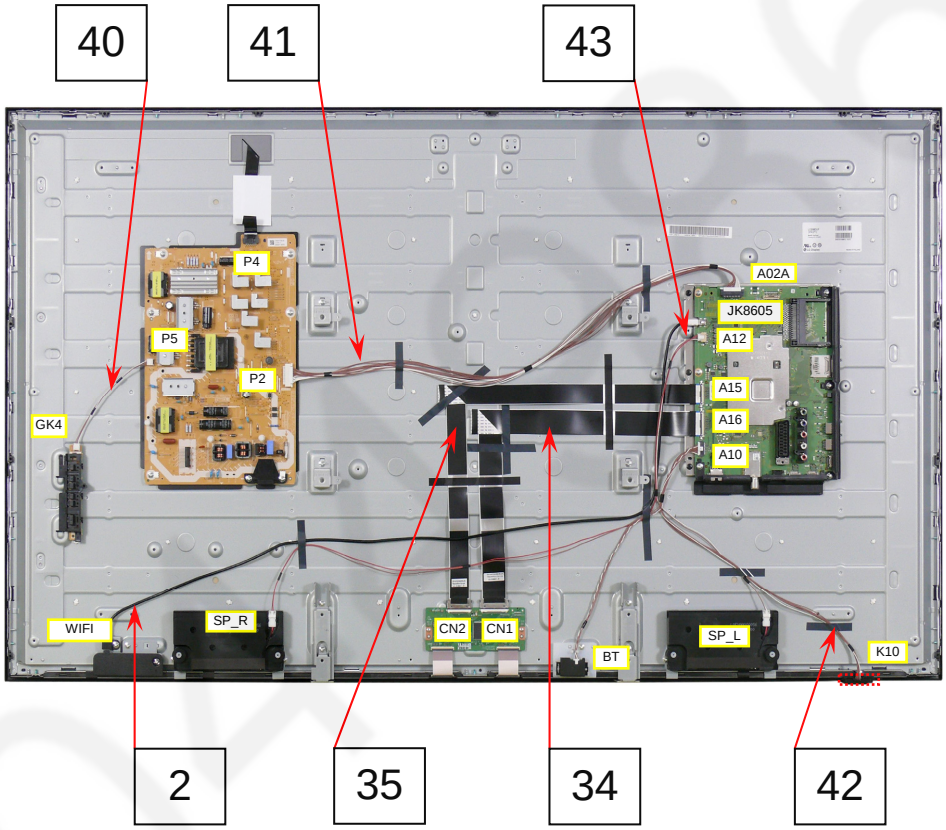

# Replacement Parts List Note

**Note:** All parts except parts mentioned [PAVCCZ] in the Remarks column are supplied by AVC-CSPC.
Parts mentioned [PAVCCZ] are supplied by PAVCCZ.

Notice: Be sure to make your orders of replacement parts according to this list.

**RTL (Retention Time Limited)**

**Note:** The marking (RTL) indicates that the Retention Time is Limited for this item.
After the discontinuation of this assembly in production, the item will continue to be available for a specific period of time. The retention period of availability is dependant on the type of assembly, and in accordance with the laws governing part and

Abbreviation of part name and description

1. Resistor

Example:

| | | |
|---|---|---|
| ERD25TJ104 | C 100KOHM | J 1/4W |
| | Type | Allowance |

| Type | Allowance |
|---|---|
| C : Carbon<br>F : Fuse<br>M : Metal Oxide Metal Film<br>S : Solid<br>W : Wire Wound | D :±0.5%<br>F :±1%<br>G :±2%<br>J :±5%<br>K :±10%<br>M :±20% |

2. Capacitor

Example:

| | | |
|---|---|---|
| ECKF1H103ZF | C 0.01UF | Z 50V |
| | Type | Allowance |

| Type | Allowance |
|---|---|
| C : Ceramic<br>E : Electrolytic<br>P : Polyester Polypropylene<br>T : Tantalum | C :±0.25pF<br>D :±0.5pF<br>F :±1pF<br>G :±3pF<br>J :±5pF<br>K :±10pF<br>L :±15pF<br>M :±20pF<br>P :+100%, -0%<br>Z :+80%, -20% |

A0449860

# Model No. : TX-55AS650B+E Parts List

| Change | Safety | Ref. No. | Part No. | Part Name & Description | Q'ty | Remarks |
|---|---|---|---|---|---|---|
| | | 1 | BAT-C-0829 | BATTERY COVER OF RC | 1 | PAVCCZ |
| | | 2 | K1HY05YY0184 | USB CABLE | 1 | PAVCCZ |
| | ⚠ | 3 | K2CQ2YY00107 | AC CORD | 1 | (TX-55AS650E) PAVCCZ |
| | ⚠ | 3 | K2CT2YY00089 | AC CORD (UK) | 1 | (TX-55AS650B) PAVCCZ |
| | | 4 | L0EYAA000056 | SPEAKER | 2 | PAVCCZ |
| | ⚠ | 5 | L5EDDYY00568 | LCD PANEL | 1 | PAVCCZ |
| | | 6 | N2QAYB000829 | REMOTE CONTROL | 1 | PAVCCZ |
| | ⚠ | 7 | N2QBYA000004 | TOUCH PAD REMOTE CONTROL | 1 | PAVCCZ |
| | ⚠ | 8 | N5HBZ0000109 | WIFI DONGLE | 1 | PAVCCZ |
| | ⚠ | 9 | N5HZZ0000130 | BLUETOOTH DONGLE | 1 | PAVCCZ |
| | | 10 | N5ZZ00000284 | 3D GLASSES | 1 | PAVCCZ |
| | | 11 | TBL5ZA35141 | NECK BASE L | 1 | PAVCCZ |
| | | 12 | TBL5ZA35151 | NECK BASE R | 1 | PAVCCZ |
| | | 13 | TBL5ZA35171 | METAL FRAME | 1 | PAVCCZ |
| | | 14 | TBL5ZB33601 | METAL FRAME SHEET L | 1 | PAVCCZ |
| | | 15 | TBL5ZB33821 | METAL FRAME SHEET R | 1 | PAVCCZ |
| | | 16 | TBL5ZG30301 | RUBBER FOOT | 2 | PAVCCZ |
| | | 17 | TBL5ZG30341 | RUBBER FOOT | 4 | PAVCCZ |
| | | 18 | TBL5ZX08911 | STAND METAL ASSY | 1 | PAVCCZ |
| | ⚠ | 19 | TBM0EC1631 | MODEL LABEL | 1 | (TX-55AS650E) PAVCCZ |
| | ⚠ | 19 | TBM0EC2751 | MODEL LABEL | 1 | (TX-55AS650B) PAVCCZ |
| | | 20 | TBM0EU0221 | REAR AV LABEL | 1 | PAVCCZ |
| | | 21 | TBM0EU0231 | SIDE AV LABEL | 1 | PAVCCZ |
| | | 22 | TBM0EU0241 | KEY BUTTON SHEET | 1 | PAVCCZ |
| | | 23 | TBM4GU113 | COVER LABEL | 1 | PAVCCZ |
| | | 24 | TBX0E87900 | KEY BUTTON BRACKET | 1 | PAVCCZ |
| | | 25 | TKK5ZC50501A | LED PANEL | 1 | PAVCCZ |
| | | 26 | TKP5ZA41701 | LED PANEL CASE | 1 | PAVCCZ |
| | | 27 | TKP5ZA41801 | BLUETOOTH BRACKET | 1 | PAVCCZ |
| | | 28 | TKP5ZA41901 | SP BRACKET | 4 | PAVCCZ |
| | | 29 | TKP5ZA42001 | SIDE AV BRACKET | 1 | PAVCCZ |
| | | 30 | TKP5ZA42201 | BOTTOM AV BRACKET | 1 | PAVCCZ |
| | ⚠ | 31 | TKU5ZC07701 | BACK COVER | 1 | PAVCCZ |
| | | 32 | TKZ5ZA50841 | LCD MTG BOTTOM | 4 | PAVCCZ |
| | | 33 | TMK5ZX079-1 | BARRIER | 1 | PAVCCZ |
| | | 34 | TSCKF0170123 | LVDS FFC (51PIN) | 1 | PAVCCZ |
| | | 35 | TSCKF0170124 | LVDS FFC (41PIN) | 1 | PAVCCZ |
| | | 36 | TUX5ZX0361 | WIFI METAL | 1 | PAVCCZ |
| | | 37 | TUX5ZX0371 | VESA METAL | 4 | PAVCCZ |
| | | 38 | TUX5ZX0391 | BOTTOM METAL | 2 | PAVCCZ |
| | ⚠ | 39 | TXFKY5Z0586 | CABINET ASSY | 1 | PAVCCZ |
| | | 40 | TXJ/P5DMVE | P5-GK4 WIRE | 1 | PAVCCZ |
| | | 41 | TXJA02DHVE | A02-P2 WIRE | 1 | PAVCCZ |
| | | 42 | TXJA10DHVE | A10-K10/BT WIRE | 1 | PAVCCZ |
| | | 43 | TXJA12DHVE | A12-SP WIRE | 1 | PAVCCZ |
| | | | R03UE/2SA | BATTERY | 2 | PAVCCZ |
| | | | R6DB/2P | BATTERY | 2 | PAVCCZ |
| | | | THE5ZL002N | SCREW (PEDESTAL) | 4 | PAVCCZ |
| | | | TMK4GA290 | FELT(495X5XT0.35) | 2 | PAVCCZ |
| | | | TPDX0033 | JOINT | 4 | PAVCCZ |
| | | | TPE0E4096 | SET BAG | 1 | PAVCCZ |
| | ⚠ | | TQB0E2401 | PRODUCT FICHE | 1 | (TX-55AS650B) PAVCCZ |
| | ⚠ | | TQB0E2401U | INSTRUCTION BOOK (ENGLISH) | 1 | (TX-55AS650B) PAVCCZ |
| | ⚠ | | TQB0E2402 | PRODUCT FICHE | 1 | (TX-55AS650E) PAVCCZ |
| | ⚠ | | TQB0E2402A | INSTRUCTION BOOK (GERMAN) | 1 | (TX-55AS650E) PAVCCZ |
| | ⚠ | | TQB0E2402B | INSTRUCTION BOOK (DUTCH) | 1 | (TX-55AS650E) PAVCCZ |
| | ⚠ | | TQB0E2402C | INSTRUCTION BOOK (ITALIAN) | 1 | (TX-55AS650E) PAVCCZ |
| | ⚠ | | TQB0E2402D | INSTRUCTION BOOK (FRENCH) | 1 | (TX-55AS650E) PAVCCZ |
| | ⚠ | | TQB0E2402E | INSTRUCTION BOOK (SPANISH) | 1 | (TX-55AS650E) PAVCCZ |
| | ⚠ | | TQB0E2402F | INSTRUCTION BOOK (SWEDISH) | 1 | (TX-55AS650E) PAVCCZ |
| | ⚠ | | TQB0E2402G | INSTRUCTION BOOK (NORWEGIAN) | 1 | (TX-55AS650E) PAVCCZ |
| | ⚠ | | TQB0E2402H | INSTRUCTION BOOK (FINNISH) | 1 | (TX-55AS650E) PAVCCZ |

## Model No. : TX-55AS650B+E Parts List

| Change | Safety | Ref. No. | Part No. | Part Name & Description | Q'ty | Remarks |
|---|---|---|---|---|---|---|
| | ⚠ | | TQB0E2402I | INSTRUCTION BOOK (LITHUANIAN) | 1 | (TX-55AS650E) PAVCCZ |
| | ⚠ | | TQB0E2402J | INSTRUCTION BOOK (PORTUGUESE) | 1 | (TX-55AS650E) PAVCCZ |
| | ⚠ | | TQB0E2402K | INSTRUCTION BOOK (DANISH) | 1 | (TX-55AS650E) PAVCCZ |
| | ⚠ | | TQB0E2402M | INSTRUCTION BOOK (BULGARIAN) | 1 | (TX-55AS650E) PAVCCZ |
| | ⚠ | | TQB0E2402N | INSTRUCTION BOOK (ROMANIAN) | 1 | (TX-55AS650E) PAVCCZ |
| | ⚠ | | TQB0E2402O | INSTRUCTION BOOK (LATVIAN) | 1 | (TX-55AS650E) PAVCCZ |
| | ⚠ | | TQB0E2402P | INSTRUCTION BOOK (POLISH) | 1 | (TX-55AS650E) PAVCCZ |
| | ⚠ | | TQB0E2402Q | INSTRUCTION BOOK (HUNGARIAN) | 1 | (TX-55AS650E) PAVCCZ |
| | ⚠ | | TQB0E2402R | INSTRUCTION BOOK (CZECH) | 1 | (TX-55AS650E) PAVCCZ |
| | ⚠ | | TQB0E2402S | INSTRUCTION BOOK (GREEK) | 1 | (TX-55AS650E) PAVCCZ |
| | ⚠ | | TQB0E2402T | INSTRUCTION BOOK (TURKISH) | 1 | (TX-55AS650E) PAVCCZ |
| | ⚠ | | TQB0E2402U | INSTRUCTION BOOK (ENGLISH) | 1 | (TX-55AS650E) PAVCCZ |
| | ⚠ | | TQB0E2402V | INSTRUCTION BOOK (CROATIAN) | 1 | (TX-55AS650E) PAVCCZ |
| | ⚠ | | TQB0E2402W | INSTRUCTION BOOK (SLOVAKIAN) | 1 | (TX-55AS650E) PAVCCZ |
| | ⚠ | | TQB0E2402Z | INSTRUCTION BOOK (ESTONIAN) | 1 | (TX-55AS650E) PAVCCZ |
| | | | TQF0EA628 | ENERGY LABEL | 1 | PAVCCZ |
| | | | TUC4GJ5058 | HEATSINK | 3 | PAVCCZ |
| | | | TUC5ZJ50932 | HEATSINK | 1 | PAVCCZ |
| | | | TUC5ZJ51101 | HEATSINK BOTTOM | 1 | PAVCCZ |
| | | | TUC5ZJ51441 | HEATSINK TOP | 1 | PAVCCZ |
| | | | XSS5+15FNK | SCREW | 4 | PAVCCZ |
| | | BOTCUS | TPD0E23191 | CUSHION BOTTOM | 1 | PAVCCZ |
| | | CARBOT | TPC0EA22801 | CARTON BOTTOM | 1 | PAVCCZ |
| | ⚠ | CARTOP | TPC0EA22701 | CARTON TOP | 1 | PAVCCZ |
| | | CK301 | TMME442 | SPACER HEATSINK HOLD | 1 | PAVCCZ |
| | | CK302 | TMME442 | SPACER HEATSINK HOLD | 1 | PAVCCZ |
| | | CK303 | TMME442 | SPACER HEATSINK HOLD | 1 | PAVCCZ |
| | | CK304 | TMME399 | SPACER(P_PCB) | 1 | PAVCCZ |
| | | CK305 | TMME399 | SPACER(P_PCB) | 1 | PAVCCZ |
| | | CK306 | TMME399 | SPACER(P_PCB) | 1 | PAVCCZ |
| | | CK307 | TMME399 | SPACER(P_PCB) | 1 | PAVCCZ |
| | | CTOPCUS | TPD0E13401 | CUSHION TOP CENTER | 1 | PAVCCZ |
| | | FK201 | TMK0EA492 | FELT(130X10XT0.35) | 1 | PAVCCZ |
| | | FK202 | TMK0EA492 | FELT(130X10XT0.35) | 1 | PAVCCZ |
| | | FK203 | TMK0EA487 | FELT(260X10XT0.35) | 1 | PAVCCZ |
| | | FK204 | TMK0EA487 | FELT(260X10XT0.35) | 1 | PAVCCZ |
| | | FK205 | TMK0EA487 | FELT(260X10XT0.35) | 1 | PAVCCZ |
| | | FK206 | TMK0EA497 | FELT(350X10XT0.35) | 1 | PAVCCZ |
| | | FK207 | TMK0EA497 | FELT(350X10XT0.35) | 1 | PAVCCZ |
| | | FK208 | TMK0EA500 | FELT(310X10XT0.35) | 1 | PAVCCZ |
| | | FK209 | TMK0EA500 | FELT(310X10XT0.35) | 1 | PAVCCZ |
| | | FK210 | TMK0EA496 | FELT(40X10XT0.45) | 1 | PAVCCZ |
| | | FK211 | TMK0EA462 | FELT(240X10XT0.45) | 1 | PAVCCZ |
| | | FK212 | TMK0EA426 | FELT(362X10XT0.45) | 1 | PAVCCZ |
| | | FK213 | TMK0EA495 | FELT(380X10XT0.45) | 1 | PAVCCZ |
| | | FK214 | TMK0EA462 | FELT(240X10XT0.45) | 1 | PAVCCZ |
| | | FK215 | TMK0EA155 | FELT(10X160XT0.5) | 1 | PAVCCZ |
| | | FK216 | TMK0EA155 | FELT(10X160XT0.5) | 1 | PAVCCZ |
| | | FK217 | TMK0EA421 | FELT(95X8XT0.45) | 1 | PAVCCZ |
| | | FK218 | TMK0EA421 | FELT(95X8XT0.45) | 1 | PAVCCZ |
| | | FK301 | TMKK432 | THERMAL CONDUCTIVE SHEET | 1 | PAVCCZ |
| | | FK302 | TMKK432 | THERMAL CONDUCTIVE SHEET | 1 | PAVCCZ |
| | | FK303 | TMKK432 | THERMAL CONDUCTIVE SHEET | 1 | PAVCCZ |
| | | FK304 | TMKK432 | THERMAL CONDUCTIVE SHEET | 1 | PAVCCZ |
| | | FK305 | TMKK461 | RUBBER(L20XW20XT1) | 1 | PAVCCZ |
| | | FK306 | TMKK438 | HEAT RUBBER | 1 | PAVCCZ |
| | | FK308 | TEWF411 | AL-PET TAPE(W10XL120) | 1 | PAVCCZ |
| | | FK309 | TEWF411 | AL-PET TAPE(W10XL120) | 1 | PAVCCZ |
| | | FK310 | TMK0EA421 | FELT(95X8XT0.45) | 1 | PAVCCZ |
| | | FK311 | TMK0EA419 | FELT(20X10XT0.45) | 1 | PAVCCZ |
| | | FK312 | TMK0EA419 | FELT(20X10XT0.45) | 1 | PAVCCZ |
| | | FK313 | TMK0EA155 | FELT(10X160XT0.5) | 1 | PAVCCZ |

## Model No. : TX-55AS650B+E Parts List

| Change | Safety | Ref. No. | Part No. | Part Name & Description | Q'ty | Remarks |
|---|---|---|---|---|---|---|
| | | FK314 | TEWF178 | PET/AL TAPE(W15XL20) | 1 | PAVCCZ |
| | | FK315 | TEWF178 | PET/AL TAPE(W15XL20) | 1 | PAVCCZ |
| | | FK316 | TEWF178 | PET/AL TAPE(W15XL20) | 1 | PAVCCZ |
| | | FK317 | TEWF178 | PET/AL TAPE(W15XL20) | 1 | PAVCCZ |
| | | FK318 | TEWF178 | PET/AL TAPE(W15XL20) | 1 | PAVCCZ |
| | | FK319 | TEWF178 | PET/AL TAPE(W15XL20) | 1 | PAVCCZ |
| | | FK320 | TMK4GA383 | FELT(540X3XT0.35) | 1 | PAVCCZ |
| | | FK321 | TMK4GA383 | FELT(540X3XT0.35) | 1 | PAVCCZ |
| | | FK322 | TMK4GA383 | FELT(540X3XT0.35) | 1 | PAVCCZ |
| | | FRONTCUS | TPD0E50401 | CUSHION FRONT | 1 | PAVCCZ |
| | | GK302 | TEWB719 | GASKET(10X100XT10) | 1 | PAVCCZ |
| | | GK303 | TEWB719 | GASKET(10X100XT10) | 1 | PAVCCZ |
| | | GK304 | TEWB625 | GASKET(T8X10X20) | 1 | PAVCCZ |
| | | GK305 | TEWB625 | GASKET(T8X10X20) | 1 | PAVCCZ |
| | | GK308 | TEWB772 | GASKET(T5XW10XL10) | 1 | PAVCCZ |
| | | HS7800 | TUC5ZJ51521 | HEATSINK | 1 | PAVCCZ |
| | | HS7801 | TUC5ZJ51521 | HEATSINK | 1 | PAVCCZ |
| | | HS7802 | TUC5ZJ51521 | HEATSINK | 1 | PAVCCZ |
| | | HS7803 | TUC5ZJ51521 | HEATSINK | 1 | PAVCCZ |
| | | HS7804 | TUC5ZJ51521 | HEATSINK | 1 | PAVCCZ |
| | | HS7805 | TUC5ZJ51521 | HEATSINK | 1 | PAVCCZ |
| | | LRTOPCUS | TPD0E13181 | CUSHION TOP | 1 | PAVCCZ |
| | | SK101 | THE5ZC008N | SCREW M5X12 | 1 | PAVCCZ |
| | | SK102 | THE5ZC008N | SCREW M5X12 | 1 | PAVCCZ |
| | | SK103 | THE5ZC008N | SCREW M5X12 | 1 | PAVCCZ |
| | | SK104 | THE5ZC008N | SCREW M5X12 | 1 | PAVCCZ |
| | | SK201 | THTD037J | SCREW M3X10 | 1 | PAVCCZ |
| | | SK202 | THTD037J | SCREW M3X10 | 1 | PAVCCZ |
| | | SK203 | THTD037J | SCREW M3X10 | 1 | PAVCCZ |
| | | SK204 | THTD037J | SCREW M3X10 | 1 | PAVCCZ |
| | | SK205 | THTD037J | SCREW M3X10 | 1 | PAVCCZ |
| | | SK206 | THTD037J | SCREW M3X10 | 1 | PAVCCZ |
| | | SK207 | THTD037J | SCREW M3X10 | 1 | PAVCCZ |
| | | SK208 | THTD037J | SCREW M3X10 | 1 | PAVCCZ |
| | | SK209 | THTD037J | SCREW M3X10 | 1 | PAVCCZ |
| | | SK210 | THTD037J | SCREW M3X10 | 1 | PAVCCZ |
| | | SK211 | THTD037J | SCREW M3X10 | 1 | PAVCCZ |
| | | SK212 | THTD037J | SCREW M3X10 | 1 | PAVCCZ |
| | | SK213 | THTD037J | SCREW M3X10 | 1 | PAVCCZ |
| | | SK214 | THTD037J | SCREW M3X10 | 1 | PAVCCZ |
| | | SK215 | THTD037J | SCREW M3X10 | 1 | PAVCCZ |
| | | SK216 | THTD037J | SCREW M3X10 | 1 | PAVCCZ |
| | | SK217 | THTD037J | SCREW M3X10 | 1 | PAVCCZ |
| | | SK218 | THTD037J | SCREW M3X10 | 1 | PAVCCZ |
| | | SK219 | THTD037J | SCREW M3X10 | 1 | PAVCCZ |
| | | SK220 | THEC1509 | SCREW | 1 | PAVCCZ |
| | | SK221 | THEC1509 | SCREW | 1 | PAVCCZ |
| | | SK222 | THEC1509 | SCREW | 1 | PAVCCZ |
| | | SK223 | THEC1509 | SCREW | 1 | PAVCCZ |
| | | SK224 | THEC1509 | SCREW | 1 | PAVCCZ |
| | | SK225 | THEC1509 | SCREW | 1 | PAVCCZ |
| | | SK226 | THEC1509 | SCREW | 1 | PAVCCZ |
| | | SK227 | THEC1509 | SCREW | 1 | PAVCCZ |
| | | SK301 | THE5ZC009J | SCREW M3X8 | 1 | PAVCCZ |
| | | SK302 | THE5ZC009J | SCREW M3X8 | 1 | PAVCCZ |
| | | SK303 | THE5ZC009J | SCREW M3X8 | 1 | PAVCCZ |
| | | SK304 | THE5ZC009J | SCREW M3X8 | 1 | PAVCCZ |
| | | SK305 | THE5ZC009J | SCREW M3X8 | 1 | PAVCCZ |
| | | SK306 | THE5ZC009J | SCREW M3X8 | 1 | PAVCCZ |
| | | SK307 | THE5ZC009J | SCREW M3X8 | 1 | PAVCCZ |
| | | SK308 | THE5ZC009J | SCREW M3X8 | 1 | PAVCCZ |
| | | SK309 | THE5ZC009J | SCREW M3X8 | 1 | PAVCCZ |

## Model No. : TX-55AS650B+E Parts List

| Change | Safety | Ref. No. | Part No. | Part Name & Description | Q'ty | Remarks |
|---|---|---|---|---|---|---|
| | | SK310 | THE5ZC009J | SCREW M3X8 | 1 | PAVCCZ |
| | | SK311 | THE5ZC009J | SCREW M3X8 | 1 | PAVCCZ |
| | | SK312 | THE5ZC009J | SCREW M3X8 | 1 | PAVCCZ |
| | | SK313 | THE5ZC009J | SCREW M3X8 | 1 | PAVCCZ |
| | | SK314 | THE5ZC009J | SCREW M3X8 | 1 | PAVCCZ |
| | | SK315 | THE5ZC009J | SCREW M3X8 | 1 | PAVCCZ |
| | | SK316 | THE5ZC009J | SCREW M3X8 | 1 | PAVCCZ |
| | | SK317 | THEJ036J | SCREW | 1 | PAVCCZ |
| | | SK318 | THEJ036J | SCREW | 1 | PAVCCZ |
| | | SK319 | THEJ036J | SCREW | 1 | PAVCCZ |
| | | SK320 | THEJ036J | SCREW | 1 | PAVCCZ |
| | | SK321 | THEJ036J | SCREW | 1 | PAVCCZ |
| | | SK322 | THEJ036J | SCREW | 1 | PAVCCZ |
| | | SK323 | THEJ036J | SCREW | 1 | PAVCCZ |
| | | SK324 | THEJ036J | SCREW | 1 | PAVCCZ |
| | | SK325 | THEJ036J | SCREW | 1 | PAVCCZ |
| | | SK326 | THEJ036J | SCREW | 1 | PAVCCZ |
| | | SK327 | THEJ036J | SCREW | 1 | PAVCCZ |
| | | SK328 | THEJ036J | SCREW | 1 | PAVCCZ |
| | | SK329 | THEJ036J | SCREW | 1 | PAVCCZ |
| | | SK330 | THEJ036J | SCREW | 1 | PAVCCZ |
| | | SK331 | THEJ036J | SCREW | 1 | PAVCCZ |
| | | SK332 | THEC1509 | SCREW | 1 | PAVCCZ |
| | | SK333 | THEC1509 | SCREW | 1 | PAVCCZ |
| | | SK334 | THEC1509 | SCREW | 1 | PAVCCZ |
| | | SK335 | THEC1509 | SCREW | 1 | PAVCCZ |
| | | SK336 | THEC1509 | SCREW | 1 | PAVCCZ |
| | | SK337 | THEC1509 | SCREW | 1 | PAVCCZ |
| | | SK338 | THEC1509 | SCREW | 1 | PAVCCZ |
| | | SK339 | THEJ036J | SCREW | 1 | PAVCCZ |
| | | SK340 | THEJ036J | SCREW | 1 | PAVCCZ |
| | | SK341 | THEJ036J | SCREW | 1 | PAVCCZ |
| | | SK342 | THEJ036J | SCREW | 1 | PAVCCZ |
| | | SK343 | THEJ036J | SCREW | 1 | PAVCCZ |
| | | SK344 | THEJ036J | SCREW | 1 | PAVCCZ |
| | | SK345 | THEJ036J | SCREW | 1 | PAVCCZ |
| | | SK346 | THEJ036J | SCREW | 1 | PAVCCZ |
| | | SK347 | THEJ036J | SCREW | 1 | PAVCCZ |
| | | SK348 | THEJ036J | SCREW | 1 | PAVCCZ |
| | | SK349 | THEJ036J | SCREW | 1 | PAVCCZ |
| | | SK350 | THEJ036J | SCREW | 1 | PAVCCZ |
| | | SK351 | THEJ036J | SCREW | 1 | PAVCCZ |
| | | SK352 | THEJ036J | SCREW | 1 | PAVCCZ |
| | | SP01 | XYN3+C6FJ | SCREW | 1 | PAVCCZ |
| | | SP02 | XYN3+C6FJ | SCREW | 1 | PAVCCZ |
| | | SP03 | XYN3+C6FJ | SCREW | 1 | PAVCCZ |
| | | SP05 | XYN3+C6FJ | SCREW | 1 | PAVCCZ |
| | | SP06 | XYN3+C6FJ | SCREW | 1 | PAVCCZ |
| | | SP07 | XYN3+C6FJ | SCREW | 1 | PAVCCZ |
| | | SP08 | XYN3+C6FJ | SCREW | 1 | PAVCCZ |

# Model No. : TX-55AS650B+E Parts List

| Change | Safety | Ref. No. | Part No. | Part Name & Description | Q'ty | Remarks |
|---|---|---|---|---|---|---|
| | | | | | | |
| | ⚠ | PCB | A-55AS650B | CIRCUIT BOARD A | 1 | (TX-55AS650B) (RTL)PAVCCZ |
| | ⚠ | PCB | A-55AS650E | CIRCUIT BOARD A | 1 | (TX-55AS650E) (RTL)PAVCCZ |
| | ⚠ | PCB | TXN/K1ZLUB | CIRCUIT BOARD K | 1 | (RTL)PAVCCZ |
| | ⚠ | PCB | TXN/P1ZEUB | CIRCUIT BOARD P | 1 | (RTL)PAVCCZ |
| | ⚠ | PCB | TXNGK1ZKUJ | CIRCUIT BOARD GK | 1 | (RTL)PAVCCZ |
| | | | | | | |
| | | A02A | K1KY22BA0484 | 22P CONNECTOR | 1 | PAVCCZ |
| | | A10 | K1KY12BA0483 | 12P CONNECTOR | 1 | PAVCCZ |
| | | A12 | K1KY04BA0387 | 4P CONNECTOR | 1 | PAVCCZ |
| | | A15 | K1MY41BA0526 | 41P CONNECTOR | 1 | PAVCCZ |
| | | A16 | K1MY51BA0526 | 51P CONNECTOR | 1 | PAVCCZ |
| | | | | | | |
| | | C0902 | F1G1H220A948 | C 22PF, J, 50V | 1 | PAVCCZ |
| | | C0903 | F1G1H220A948 | C 22PF, J, 50V | 1 | PAVCCZ |
| | | C0904 | F1G1H220A948 | C 22PF, J, 50V | 1 | PAVCCZ |
| | | C0905 | F1G1H220A948 | C 22PF, J, 50V | 1 | PAVCCZ |
| | | C2009 | F1G1H102A946 | C 1000PF, K, 50V | 1 | PAVCCZ |
| | | C2011 | F1G1H101A948 | C 100PF, J, 50V | 1 | PAVCCZ |
| | | C2012 | F1G1E103A172 | C 0.01UF, K, 25V | 1 | PAVCCZ |
| | | C2014 | F1K1V106A010 | C 10UF, , 35V | 1 | PAVCCZ |
| | | C2023 | F1G1C104A146 | C 0.1UF, , 16V | 1 | PAVCCZ |
| | | C2038 | F1G1H102A946 | C 1000PF, K, 50V | 1 | PAVCCZ |
| | | C2039 | F1G1H222A946 | C 2200PF, K, 50V | 1 | PAVCCZ |
| | | C2155 | F1G1H221A834 | C 220PF, -, 50V | 1 | PAVCCZ |
| | | C2156 | F1G1H221A834 | C 220PF, -, 50V | 1 | PAVCCZ |
| | | C2157 | F1G1H221A834 | C 220PF, -, 50V | 1 | PAVCCZ |
| | | C2209 | F1G1E103A172 | C 0.01UF, K, 25V | 1 | PAVCCZ |
| | | C2210 | F1J0J2260004 | C 22UF, , 6.3V | 1 | PAVCCZ |
| | | C2213 | F1G1E103A172 | C 0.01UF, K, 25V | 1 | PAVCCZ |
| | | C2214 | F1G1E103A172 | C 0.01UF, K, 25V | 1 | PAVCCZ |
| | | C2801 | F1H1H103B047 | C 10NF, , 50V | 1 | PAVCCZ |
| | | C2804 | F1H1C104A178 | C 0.1UF, -, 16V | 1 | PAVCCZ |
| | | C2807 | F1J1A106A043 | C 10UF, , 10V | 1 | PAVCCZ |
| | | C2808 | F1H1C104A178 | C 0.1UF, -, 16V | 1 | PAVCCZ |
| | | C2851 | F1J1H104A902 | C 100NF, , 50V | 1 | PAVCCZ |
| | | C2852 | F1J1H104A902 | C 100NF, , 50V | 1 | PAVCCZ |
| | | C3000 | F1G1C104A146 | C 0.1UF, , 16V | 1 | PAVCCZ |
| | | C3026 | F1G1A105A047 | C 1000NF, , 10V | 1 | PAVCCZ |
| | | C3036 | F1G1A105A047 | C 1000NF, , 10V | 1 | PAVCCZ |
| | | C3037 | F1G1A105A047 | C 1000NF, , 10V | 1 | PAVCCZ |
| | | C3040 | F1G1H221A834 | C 220PF, -, 50V | 1 | PAVCCZ |
| | | C3041 | F1G1A105A047 | C 1000NF, , 10V | 1 | PAVCCZ |
| | | C3042 | F1G1A105A047 | C 1000NF, , 10V | 1 | PAVCCZ |
| | | C3061 | F1G1C104A146 | C 0.1UF, , 16V | 1 | PAVCCZ |
| | | C3062 | F1G1C104A146 | C 0.1UF, , 16V | 1 | PAVCCZ |
| | | C3063 | F1G1C104A146 | C 0.1UF, , 16V | 1 | PAVCCZ |
| | | C3064 | F1G1H220A948 | C 22PF, J, 50V | 1 | PAVCCZ |
| | | C3065 | F1G1H120A948 | C 12PF, J, 50V | 1 | PAVCCZ |
| | | C3101 | F1G1H471A834 | C 470PF, , 50V | 1 | PAVCCZ |
| | | C3105 | F1G1H471A834 | C 470PF, , 50V | 1 | PAVCCZ |
| | | C3135 | F1G1H471A834 | C 470PF, , 50V | 1 | PAVCCZ |
| | | C3136 | F1G1H471A834 | C 470PF, , 50V | 1 | PAVCCZ |
| | | C3139 | F1G1H471A834 | C 470PF, , 50V | 1 | PAVCCZ |
| | | C3140 | F1G1H471A834 | C 470PF, , 50V | 1 | PAVCCZ |
| | | C3166 | F1G1H102A946 | C 1000PF, K, 50V | 1 | PAVCCZ |
| | | C3168 | F1G1E333A144 | C 0.033UF, -, 25V | 1 | PAVCCZ |
| | | C3170 | F1G1E333A144 | C 0.033UF, -, 25V | 1 | PAVCCZ |
| | | C3171 | F1G1A105A047 | C 1000NF, , 10V | 1 | PAVCCZ |
| | | C3172 | F1G1A105A047 | C 1000NF, , 10V | 1 | PAVCCZ |
| | | C3173 | F1G1A105A047 | C 1000NF, , 10V | 1 | PAVCCZ |
| | | C3174 | F1G1A105A047 | C 1000NF, , 10V | 1 | PAVCCZ |

## Model No. : TX-55AS650B+E Parts List

| Change | Safety | Ref. No. | Part No. | Part Name & Description | Q'ty | Remarks |
|---|---|---|---|---|---|---|
| | | C3175 | F1G1A105A047 | C 1000NF, , 10V | 1 | PAVCCZ |
| | | C3176 | F1G1A105A047 | C 1000NF, , 10V | 1 | PAVCCZ |
| | | C3191 | F1J1A106A043 | C 10UF, , 10V | 1 | PAVCCZ |
| | | C3192 | F1J1A106A043 | C 10UF, , 10V | 1 | PAVCCZ |
| | | C3195 | F1K1V106A010 | C 10UF, , 35V | 1 | PAVCCZ |
| | | C3196 | F1J1A106A043 | C 10UF, , 10V | 1 | PAVCCZ |
| | | C3301 | F1J1A106A043 | C 10UF, , 10V | 1 | PAVCCZ |
| | | C3302 | F1J1A106A043 | C 10UF, , 10V | 1 | PAVCCZ |
| | | C3303 | F1J1A106A043 | C 10UF, , 10V | 1 | PAVCCZ |
| | | C3304 | F1J1A106A043 | C 10UF, , 10V | 1 | PAVCCZ |
| | | C3315 | F2H1A101A040 | E 100UF, , 10V | 1 | PAVCCZ |
| | | C3316 | F2H1A101A040 | E 100UF, , 10V | 1 | PAVCCZ |
| | | C4004 | F1K1V106A010 | C 10UF, , 35V | 1 | PAVCCZ |
| | | C4005 | F1K1V106A010 | C 10UF, , 35V | 1 | PAVCCZ |
| | | C4006 | F1G1E103A172 | C 0.01UF, K, 25V | 1 | PAVCCZ |
| | | C4008 | F1G1E103A172 | C 0.01UF, K, 25V | 1 | PAVCCZ |
| | | C4701 | F1G1A105A047 | C 1000NF, , 10V | 1 | PAVCCZ |
| | | C4906 | F1H1E105A153 | C 1000NF, , 25V | 1 | PAVCCZ |
| | | C4909 | F1J1E105A287 | C 1000NF, , 25V | 1 | PAVCCZ |
| | | C4910 | F1H1E104A161 | C 0.1UF, , 25V | 1 | PAVCCZ |
| | | C4914 | F1K1V106A010 | C 10UF, , 35V | 1 | PAVCCZ |
| | | C4916 | F1H1E104A161 | C 0.1UF, , 25V | 1 | PAVCCZ |
| | | C4919 | F1J1E105A287 | C 1000NF, , 25V | 1 | PAVCCZ |
| | | C4924 | F1H1E104A161 | C 0.1UF, , 25V | 1 | PAVCCZ |
| | | C4926 | F1K1V106A010 | C 10UF, , 35V | 1 | PAVCCZ |
| | | C4928 | F1J1E105A287 | C 1000NF, , 25V | 1 | PAVCCZ |
| | | C4930 | F1K1V106A010 | C 10UF, , 35V | 1 | PAVCCZ |
| | | C4933 | F1H1E104A161 | C 0.1UF, , 25V | 1 | PAVCCZ |
| | | C4934 | F1J1E105A287 | C 1000NF, , 25V | 1 | PAVCCZ |
| | | C4937 | F1J1E224A272 | C 220NF, , 25V | 1 | PAVCCZ |
| | | C4938 | F1J1E224A272 | C 220NF, , 25V | 1 | PAVCCZ |
| | | C5000 | F1G1A105A047 | C 1000NF, , 10V | 1 | PAVCCZ |
| | | C5002 | F1G1A105A047 | C 1000NF, , 10V | 1 | PAVCCZ |
| | | C5004 | F1G1A105A047 | C 1000NF, , 10V | 1 | PAVCCZ |
| | | C5006 | F1H1E105A153 | C 1000NF, , 25V | 1 | PAVCCZ |
| | | C5012 | F1G1A105A047 | C 1000NF, , 10V | 1 | PAVCCZ |
| | | C5013 | F1G1A474A070 | C 0.47UF, Z, 10V | 1 | PAVCCZ |
| | | C5020 | F1G1C104A146 | C 0.1UF, , 16V | 1 | PAVCCZ |
| | | C5021 | F1G1A105A047 | C 1000NF, , 10V | 1 | PAVCCZ |
| | | C5022 | F1G1A105A047 | C 1000NF, , 10V | 1 | PAVCCZ |
| | | C5026 | F1H1E105A153 | C 1000NF, , 25V | 1 | PAVCCZ |
| | | C5150 | F1G1E103A172 | C 0.01UF, K, 25V | 1 | PAVCCZ |
| | | C5151 | F1G1E103A172 | C 0.01UF, K, 25V | 1 | PAVCCZ |
| | | C5171 | F1G1E103A172 | C 0.01UF, K, 25V | 1 | PAVCCZ |
| | | C5318 | F1G1C104A146 | C 0.1UF, , 16V | 1 | PAVCCZ |
| | | C5319 | F1K1V106A010 | C 10UF, , 35V | 1 | PAVCCZ |
| | | C5320 | F1K1V106A010 | C 10UF, , 35V | 1 | PAVCCZ |
| | | C5321 | F1K1V106A010 | C 10UF, , 35V | 1 | PAVCCZ |
| | | C5322 | F1K1V106A010 | C 10UF, , 35V | 1 | PAVCCZ |
| | | C5323 | F1K1V106A010 | C 10UF, , 35V | 1 | PAVCCZ |
| | | C5324 | F1K1V106A010 | C 10UF, , 35V | 1 | PAVCCZ |
| | | C5328 | F1G1E562A086 | C 5600PF, K, 25V | 1 | PAVCCZ |
| | | C5329 | F1G1E333A144 | C 0.033UF, -, 25V | 1 | PAVCCZ |
| | | C5705 | F1K1V106A010 | C 10UF, , 35V | 1 | PAVCCZ |
| | | C5706 | F1K1V106A010 | C 10UF, , 35V | 1 | PAVCCZ |
| | | C5707 | F1J0G2260001 | C 22UF, , 4V | 1 | PAVCCZ |
| | | C5708 | F1J0G2260001 | C 22UF, , 4V | 1 | PAVCCZ |
| | | C5709 | F1G1C104A146 | C 0.1UF, , 16V | 1 | PAVCCZ |
| | | C5711 | F1G1E333A144 | C 0.033UF, -, 25V | 1 | PAVCCZ |
| | | C5713 | F1G1H821A830 | C 820PF, , 50V | 1 | PAVCCZ |
| | | C5717 | F1J1A106A043 | C 10UF, , 10V | 1 | PAVCCZ |
| | | C5718 | F1J1A106A043 | C 10UF, , 10V | 1 | PAVCCZ |

## Model No. : TX-55AS650B+E Parts List

| Change | Safety | Ref. No. | Part No. | Part Name & Description | Q'ty | Remarks |
|---|---|---|---|---|---|---|
| | | C5720 | F1G1E103A172 | C 0.01UF, K, 25V | 1 | PAVCCZ |
| | | C6704 | F1J1A106A043 | C 10UF, , 10V | 1 | PAVCCZ |
| | | C6705 | F1G1H220A948 | C 22PF, J, 50V | 1 | PAVCCZ |
| | | C6706 | F1G1H220A948 | C 22PF, J, 50V | 1 | PAVCCZ |
| | | C6708 | F1J1A106A043 | C 10UF, , 10V | 1 | PAVCCZ |
| | | C6722 | F1G1C104A146 | C 0.1UF, , 16V | 1 | PAVCCZ |
| | | C6734 | F1G1C104A146 | C 0.1UF, , 16V | 1 | PAVCCZ |
| | | C6735 | F1G1C104A146 | C 0.1UF, , 16V | 1 | PAVCCZ |
| | | C6736 | F1G1H101A948 | C 100PF, J, 50V | 1 | PAVCCZ |
| | | C6737 | F1G1H101A948 | C 100PF, J, 50V | 1 | PAVCCZ |
| | | C6742 | F1G1H220A948 | C 22PF, J, 50V | 1 | PAVCCZ |
| | | C6743 | F1G1H220A948 | C 22PF, J, 50V | 1 | PAVCCZ |
| | | C6744 | F1G1H220A948 | C 22PF, J, 50V | 1 | PAVCCZ |
| | | C6745 | F1G1H220A948 | C 22PF, J, 50V | 1 | PAVCCZ |
| | | C6746 | F1G1C104A146 | C 0.1UF, , 16V | 1 | PAVCCZ |
| | | C6748 | F1G1H102A946 | C 1000PF, K, 50V | 1 | PAVCCZ |
| | | C6757 | F1G1H102A946 | C 1000PF, K, 50V | 1 | PAVCCZ |
| | | C6760 | F1G1H220A948 | C 22PF, J, 50V | 1 | PAVCCZ |
| | | C6761 | F1G1H220A948 | C 22PF, J, 50V | 1 | PAVCCZ |
| | | C6800 | F1G1H8R0A833 | C 8PF, -, 50V | 1 | PAVCCZ |
| | | C6801 | F1G1H8R0A833 | C 8PF, -, 50V | 1 | PAVCCZ |
| | | C6803 | F1G1C104A146 | C 0.1UF, , 16V | 1 | PAVCCZ |
| | | C6807 | F1G1C104A146 | C 0.1UF, , 16V | 1 | PAVCCZ |
| | | C6811 | F1G1C104A146 | C 0.1UF, , 16V | 1 | PAVCCZ |
| | | C6816 | F1G1H220A948 | C 22PF, J, 50V | 1 | PAVCCZ |
| | | C6820 | F1G1H220A948 | C 22PF, J, 50V | 1 | PAVCCZ |
| | | C6822 | F1G1C104A146 | C 0.1UF, , 16V | 1 | PAVCCZ |
| | | C6823 | F1G1C104A146 | C 0.1UF, , 16V | 1 | PAVCCZ |
| | | C6825 | F1G1C104A146 | C 0.1UF, , 16V | 1 | PAVCCZ |
| | | C6826 | F1G1C104A146 | C 0.1UF, , 16V | 1 | PAVCCZ |
| | | C6836 | F1J1A106A043 | C 10UF, , 10V | 1 | PAVCCZ |
| | | C6839 | F1J1A106A043 | C 10UF, , 10V | 1 | PAVCCZ |
| | | C6843 | F1J1A106A043 | C 10UF, , 10V | 1 | PAVCCZ |
| | | C6847 | F1G1C104A146 | C 0.1UF, , 16V | 1 | PAVCCZ |
| | | C6849 | F1G1C104A146 | C 0.1UF, , 16V | 1 | PAVCCZ |
| | ⚠ | C7102 | F1AAF471A019 | C 470PF, K, 250V | 1 | PAVCCZ |
| | ⚠ | C7103 | F1AAF471A019 | C 470PF, K, 250V | 1 | PAVCCZ |
| | ⚠ | C7104 | F0CAF3340009 | P 0.33UF, K, 250V | 1 | PAVCCZ |
| | ⚠ | C7105 | F0CAF2240010 | P 0.22UF, K, 250V | 1 | PAVCCZ |
| | | C7201 | F1H1H102B052 | C 1000PF, -, 50V | 1 | PAVCCZ |
| | | C7202 | F1H1H102B052 | C 1000PF, -, 50V | 1 | PAVCCZ |
| | | C7203 | F1H1H104B047 | C 100NF, , 50V | 1 | PAVCCZ |
| | | C7204 | F1H1H104B047 | C 100NF, , 50V | 1 | PAVCCZ |
| | | C7205 | F1H1H102B052 | C 1000PF, -, 50V | 1 | PAVCCZ |
| | | C7206 | F1H1H104B047 | C 100NF, , 50V | 1 | PAVCCZ |
| | | C7207 | F1A3A221A060 | C 220PF, , 1KV | 1 | PAVCCZ |
| | | C7208 | F1J1E105A287 | C 1000NF, , 25V | 1 | PAVCCZ |
| | | C7209 | ECWFD2W824KC | P 0.82UF, K, 450V | 1 | PAVCCZ |
| | | C7213 | F2A2W6500001 | E 65UF, M, 450V | 1 | PAVCCZ |
| | | C7214 | F1J1H103A900 | C 10NF, , 50V | 1 | PAVCCZ |
| | | C7215 | F2A2W6500001 | E 65UF, M, 450V | 1 | PAVCCZ |
| | | C7221 | F1A3A101A060 | C 100PF, , 1KV | 1 | PAVCCZ |
| | | C7302 | F1J1H104A902 | C 100NF, , 50V | 1 | PAVCCZ |
| | | C7303 | F1J1H104A902 | C 100NF, , 50V | 1 | PAVCCZ |
| | | C7304 | F1A3A221A060 | C 220PF, , 1KV | 1 | PAVCCZ |
| | | C7305 | F1H1H104B047 | C 100NF, , 50V | 1 | PAVCCZ |
| | | C7306 | F1J1H104A902 | C 100NF, , 50V | 1 | PAVCCZ |
| | | C7307 | F1H1H101B052 | C 100PF, , 50V | 1 | PAVCCZ |
| | ⚠ | C7309 | F1AAF101A019 | C 100PF, K, 250V | 1 | PAVCCZ |
| | | C7310 | F2A1E4710124 | E 470UF, M, 25V | 1 | PAVCCZ |
| | | C7311 | F1J1E105A287 | C 1000NF, , 25V | 1 | PAVCCZ |
| | | C7312 | F1H1C474A178 | C 470NF, , 16V | 1 | PAVCCZ |

## Model No. : TX-55AS650B+E Parts List

| Change | Safety | Ref. No. | Part No. | Part Name & Description | Q'ty | Remarks |
|---|---|---|---|---|---|---|
| | | C7313 | F1J1H102A909 | C 1NF, , 50V | 1 | PAVCCZ |
| | | C7315 | F1A3A151A060 | C 150PF, J, 1KV | 1 | PAVCCZ |
| | | C7316 | F1A3A151A060 | C 150PF, J, 1KV | 1 | PAVCCZ |
| | | C7317 | ECWH8223HAC | P 0.022UF, , 800V | 1 | PAVCCZ |
| | ⚠ | C7318 | F1AAF471A019 | C 470PF, K, 250V | 1 | PAVCCZ |
| | | C7319 | F1A3A102A060 | C 1NF, , 1KV | 1 | PAVCCZ |
| | | C7416 | F1J1C475A225 | C 4700NF, , 16V | 1 | PAVCCZ |
| | | C7417 | F1H1C474A178 | C 470NF, , 16V | 1 | PAVCCZ |
| | | C7418 | F1H1H104B047 | C 100NF, , 50V | 1 | PAVCCZ |
| | | C7422 | F2A1V6810043 | E 680UF, M, 35V | 1 | PAVCCZ |
| | | C7423 | F2A1E222B927 | E 2200UF, , 25V | 1 | PAVCCZ |
| | | C7434 | F1J1E105A287 | C 1000NF, , 25V | 1 | PAVCCZ |
| | | C7439 | F1J1C475A225 | C 4700NF, , 16V | 1 | PAVCCZ |
| | | C7522 | F1K1E106A167 | C 10UF, , 25V | 1 | PAVCCZ |
| | | C7524 | F1H1H104B047 | C 100NF, , 50V | 1 | PAVCCZ |
| | | C7525 | F1H1H221B052 | C 220PF, -, 50V | 1 | PAVCCZ |
| | | C7526 | F1J1A106A111 | C 10UF, M, 10V | 1 | PAVCCZ |
| | | C7530 | F1H1H104B047 | C 100NF, , 50V | 1 | PAVCCZ |
| | | C7531 | F1H1H104B047 | C 100NF, , 50V | 1 | PAVCCZ |
| | | C7801 | F1J1E105A287 | C 1000NF, , 25V | 1 | PAVCCZ |
| | | C7802 | F1H1C104A178 | C 0.1UF, -, 16V | 1 | PAVCCZ |
| | | C7803 | F1H1C224A178 | C 0.22UF, , 16V | 1 | PAVCCZ |
| | | C7804 | F1H1H103B047 | C 10NF, , 50V | 1 | PAVCCZ |
| | | C7805 | F1H1H103B047 | C 10NF, , 50V | 1 | PAVCCZ |
| | | C7806 | F1J1E105A287 | C 1000NF, , 25V | 1 | PAVCCZ |
| | | C7807 | F1H1C105A179 | C 1UF, , 16V | 1 | PAVCCZ |
| | | C7808 | F1H1H102B048 | C 1000PF, J, 50V | 1 | PAVCCZ |
| | | C7815 | F2A1V2710019 | E 270UF, M, 35V | 1 | PAVCCZ |
| | | C7816 | F1H1H102B048 | C 1000PF, J, 50V | 1 | PAVCCZ |
| | | C7817 | F1A3A471A060 | C 470PF, , 1KV | 1 | PAVCCZ |
| | | C7818 | F1A3A102A060 | C 1NF, , 1KV | 1 | PAVCCZ |
| | | C7824 | F1H1H102B048 | C 1000PF, J, 50V | 1 | PAVCCZ |
| | | C7825 | F1H1H102B048 | C 1000PF, J, 50V | 1 | PAVCCZ |
| | | C7828 | F1H1H103B047 | C 10NF, , 50V | 1 | PAVCCZ |
| | | C7829 | F1H1H103B047 | C 10NF, , 50V | 1 | PAVCCZ |
| | | C7830 | F2A2A1010047 | E 100UF, M, 100V | 1 | PAVCCZ |
| | | C7832 | F1K1E105A167 | C 1UF, K, 25V | 1 | PAVCCZ |
| | | C8002 | F1G1A105A047 | C 1000NF, , 10V | 1 | PAVCCZ |
| | | C8003 | F1G1H151A834 | C 150PF, -, 50V | 1 | PAVCCZ |
| | | C8004 | F1G1H151A834 | C 150PF, -, 50V | 1 | PAVCCZ |
| | | C8005 | F1G1H151A834 | C 150PF, -, 50V | 1 | PAVCCZ |
| | | C8006 | F1G1H151A834 | C 150PF, -, 50V | 1 | PAVCCZ |
| | | C8007 | F1G1H151A834 | C 150PF, -, 50V | 1 | PAVCCZ |
| | | C8008 | F1G1A105A047 | C 1000NF, , 10V | 1 | PAVCCZ |
| | | C8012 | F1G1A105A047 | C 1000NF, , 10V | 1 | PAVCCZ |
| | | C8013 | F1G1A105A047 | C 1000NF, , 10V | 1 | PAVCCZ |
| | | C8014 | F1G1A105A047 | C 1000NF, , 10V | 1 | PAVCCZ |
| | | C8016 | F1J1A106A043 | C 10UF, , 10V | 1 | PAVCCZ |
| | | C8017 | F1G1A105A047 | C 1000NF, , 10V | 1 | PAVCCZ |
| | | C8018 | F1G1A105A047 | C 1000NF, , 10V | 1 | PAVCCZ |
| | | C8019 | F1G1A105A047 | C 1000NF, , 10V | 1 | PAVCCZ |
| | | C8020 | F1G1C104A146 | C 0.1UF, , 16V | 1 | PAVCCZ |
| | | C8022 | F1G1A105A047 | C 1000NF, , 10V | 1 | PAVCCZ |
| | | C8024 | F1G1C104A146 | C 0.1UF, , 16V | 1 | PAVCCZ |
| | | C8025 | F1G1C104A146 | C 0.1UF, , 16V | 1 | PAVCCZ |
| | | C8026 | F1G1C104A146 | C 0.1UF, , 16V | 1 | PAVCCZ |
| | | C8028 | F1G1C104A146 | C 0.1UF, , 16V | 1 | PAVCCZ |
| | | C8029 | F1J1A106A043 | C 10UF, , 10V | 1 | PAVCCZ |
| | | C8031 | F1G1C104A146 | C 0.1UF, , 16V | 1 | PAVCCZ |
| | | C8033 | F1G1C104A146 | C 0.1UF, , 16V | 1 | PAVCCZ |
| | | C8034 | F1J1A106A043 | C 10UF, , 10V | 1 | PAVCCZ |
| | | C8035 | F1J0G2260001 | C 22UF, , 4V | 1 | PAVCCZ |

## Model No. : TX-55AS650B+E Parts List

| Change | Safety | Ref. No. | Part No. | Part Name & Description | Q'ty | Remarks |
|---|---|---|---|---|---|---|
| | | C8037 | F1G1C104A146 | C 0.1UF, , 16V | 1 | PAVCCZ |
| | | C8039 | F1G1A105A047 | C 1000NF, , 10V | 1 | PAVCCZ |
| | | C8041 | F1G1A105A047 | C 1000NF, , 10V | 1 | PAVCCZ |
| | | C8043 | F1G1C104A146 | C 0.1UF, , 16V | 1 | PAVCCZ |
| | | C8044 | F1J0G2260001 | C 22UF, , 4V | 1 | PAVCCZ |
| | | C8045 | F1J0G2260001 | C 22UF, , 4V | 1 | PAVCCZ |
| | | C8046 | F1G1A105A047 | C 1000NF, , 10V | 1 | PAVCCZ |
| | | C8047 | F1H1A475A102 | C 4.7UF, K, 10V | 1 | PAVCCZ |
| | | C8048 | F1H1A475A102 | C 4.7UF, K, 10V | 1 | PAVCCZ |
| | | C8049 | F1G1C104A146 | C 0.1UF, , 16V | 1 | PAVCCZ |
| | | C8053 | F1G1H470A834 | C 47PF, , 50V | 1 | PAVCCZ |
| | | C8054 | F1G1A105A047 | C 1000NF, , 10V | 1 | PAVCCZ |
| | | C8055 | F1G1H331A830 | C 330PF, , 50V | 1 | PAVCCZ |
| | | C8057 | F1J0G2260001 | C 22UF, , 4V | 1 | PAVCCZ |
| | | C8059 | F1J0G2260001 | C 22UF, , 4V | 1 | PAVCCZ |
| | | C8060 | F1J0G2260001 | C 22UF, , 4V | 1 | PAVCCZ |
| | | C8062 | F1G1H331A830 | C 330PF, , 50V | 1 | PAVCCZ |
| | | C8063 | F1G1H470A834 | C 47PF, , 50V | 1 | PAVCCZ |
| | | C8064 | F1G1H331A830 | C 330PF, , 50V | 1 | PAVCCZ |
| | | C8065 | F1G1H470A834 | C 47PF, , 50V | 1 | PAVCCZ |
| | | C8066 | F1G1H331A830 | C 330PF, , 50V | 1 | PAVCCZ |
| | | C8100 | F1G1H222A946 | C 2200PF, K, 50V | 1 | PAVCCZ |
| | | C8101 | F1G1C104A146 | C 0.1UF, , 16V | 1 | PAVCCZ |
| | | C8102 | F1K1V106A010 | C 10UF, , 35V | 1 | PAVCCZ |
| | | C8103 | F1K1V106A010 | C 10UF, , 35V | 1 | PAVCCZ |
| | | C8104 | F1H1E104A161 | C 0.1UF, , 25V | 1 | PAVCCZ |
| | | C8105 | F1G1E332A172 | C 3300PF, K, 25V | 1 | PAVCCZ |
| | | C8106 | F1J0G2260001 | C 22UF, , 4V | 1 | PAVCCZ |
| | | C8107 | F1J0G2260001 | C 22UF, , 4V | 1 | PAVCCZ |
| | | C8108 | F1J0G2260001 | C 22UF, , 4V | 1 | PAVCCZ |
| | | C8109 | F1H1E105A153 | C 1000NF, , 25V | 1 | PAVCCZ |
| | | C8110 | F1J1E475A257 | C 4700NF, , 25V | 1 | PAVCCZ |
| | | C8112 | F1K1V106A010 | C 10UF, , 35V | 1 | PAVCCZ |
| | | C8114 | F1G1C104A146 | C 0.1UF, , 16V | 1 | PAVCCZ |
| | | C8115 | F1G1C104A146 | C 0.1UF, , 16V | 1 | PAVCCZ |
| | | C8117 | F1G1E332A172 | C 3300PF, K, 25V | 1 | PAVCCZ |
| | | C8119 | F1J0G2260001 | C 22UF, , 4V | 1 | PAVCCZ |
| | | C8120 | F1J0G2260001 | C 22UF, , 4V | 1 | PAVCCZ |
| | | C8123 | F1H1E104A161 | C 0.1UF, , 25V | 1 | PAVCCZ |
| | | C8203 | F1G1C104A146 | C 0.1UF, , 16V | 1 | PAVCCZ |
| | | C8204 | F1G1C104A146 | C 0.1UF, , 16V | 1 | PAVCCZ |
| | | C8205 | F1G1C104A146 | C 0.1UF, , 16V | 1 | PAVCCZ |
| | | C8206 | F1G1C104A146 | C 0.1UF, , 16V | 1 | PAVCCZ |
| | | C8207 | F1J1A106A043 | C 10UF, , 10V | 1 | PAVCCZ |
| | | C8210 | F1G1C104A146 | C 0.1UF, , 16V | 1 | PAVCCZ |
| | | C8212 | F1G1C104A146 | C 0.1UF, , 16V | 1 | PAVCCZ |
| | | C8215 | F1G1H331A830 | C 330PF, , 50V | 1 | PAVCCZ |
| | | C8216 | F1J1A106A043 | C 10UF, , 10V | 1 | PAVCCZ |
| | | C8218 | F1G1C104A146 | C 0.1UF, , 16V | 1 | PAVCCZ |
| | | C8220 | F1G1C104A146 | C 0.1UF, , 16V | 1 | PAVCCZ |
| | | C8221 | F1G1C104A146 | C 0.1UF, , 16V | 1 | PAVCCZ |
| | | C8222 | F1G1A105A047 | C 1000NF, , 10V | 1 | PAVCCZ |
| | | C8223 | F1G1H331A830 | C 330PF, , 50V | 1 | PAVCCZ |
| | | C8226 | F1G1H331A830 | C 330PF, , 50V | 1 | PAVCCZ |
| | | C8227 | F1G1H331A830 | C 330PF, , 50V | 1 | PAVCCZ |
| | | C8229 | F1G1A105A047 | C 1000NF, , 10V | 1 | PAVCCZ |
| | | C8231 | F1G1C104A146 | C 0.1UF, , 16V | 1 | PAVCCZ |
| | | C8233 | F1G1C104A146 | C 0.1UF, , 16V | 1 | PAVCCZ |
| | | C8234 | F1G1C104A146 | C 0.1UF, , 16V | 1 | PAVCCZ |
| | | C8246 | F1J1A106A043 | C 10UF, , 10V | 1 | PAVCCZ |
| | | C8250 | F1G1C104A146 | C 0.1UF, , 16V | 1 | PAVCCZ |
| | | C8251 | F1G1H331A830 | C 330PF, , 50V | 1 | PAVCCZ |

## Model No. : TX-55AS650B+E Parts List

| Change | Safety | Ref. No. | Part No. | Part Name & Description | Q'ty | Remarks |
|---|---|---|---|---|---|---|
| | | C8254 | F1G1C104A146 | C 0.1UF, , 16V | 1 | PAVCCZ |
| | | C8255 | F1G1A105A047 | C 1000NF, , 10V | 1 | PAVCCZ |
| | | C8256 | F1G1H331A830 | C 330PF, , 50V | 1 | PAVCCZ |
| | | C8257 | F1G1A105A047 | C 1000NF, , 10V | 1 | PAVCCZ |
| | | C8259 | F1G1C104A146 | C 0.1UF, , 16V | 1 | PAVCCZ |
| | | C8300 | F1G1A105A047 | C 1000NF, , 10V | 1 | PAVCCZ |
| | | C8301 | F1G1A105A047 | C 1000NF, , 10V | 1 | PAVCCZ |
| | | C8302 | F1G1A105A047 | C 1000NF, , 10V | 1 | PAVCCZ |
| | | C8303 | F1G1A105A047 | C 1000NF, , 10V | 1 | PAVCCZ |
| | | C8304 | F1G1A105A047 | C 1000NF, , 10V | 1 | PAVCCZ |
| | | C8305 | F1G1H100A948 | C 10PF, J, 50V | 1 | PAVCCZ |
| | | C8306 | F1G1H120A948 | C 12PF, J, 50V | 1 | PAVCCZ |
| | | C8404 | F1G1C104A146 | C 0.1UF, , 16V | 1 | PAVCCZ |
| | | C8405 | F1G1C104A146 | C 0.1UF, , 16V | 1 | PAVCCZ |
| | | C8406 | F1G1C104A146 | C 0.1UF, , 16V | 1 | PAVCCZ |
| | | C8408 | F1K0J226A049 | C 22UF, , 6.3V | 1 | PAVCCZ |
| | | C8409 | F1K0J226A049 | C 22UF, , 6.3V | 1 | PAVCCZ |
| | | C8412 | F1G1C104A146 | C 0.1UF, , 16V | 1 | PAVCCZ |
| | | C8413 | F1G1H100A948 | C 10PF, J, 50V | 1 | PAVCCZ |
| | | C8414 | F1G1C104A146 | C 0.1UF, , 16V | 1 | PAVCCZ |
| | | C8600 | F1H1E105A153 | C 1000NF, , 25V | 1 | PAVCCZ |
| | | C8602 | F1G1H120A948 | C 12PF, J, 50V | 1 | PAVCCZ |
| | | C8603 | F1G1H120A948 | C 12PF, J, 50V | 1 | PAVCCZ |
| | | C8604 | F1G1C104A146 | C 0.1UF, , 16V | 1 | PAVCCZ |
| | | C8605 | F1J1A106A043 | C 10UF, , 10V | 1 | PAVCCZ |
| | | C8608 | F1G1C104A146 | C 0.1UF, , 16V | 1 | PAVCCZ |
| | | C8609 | F1H1E105A153 | C 1000NF, , 25V | 1 | PAVCCZ |
| | | C8611 | F1G1C104A146 | C 0.1UF, , 16V | 1 | PAVCCZ |
| | | C8613 | F1J1A106A043 | C 10UF, , 10V | 1 | PAVCCZ |
| | | C8615 | F1G1C104A146 | C 0.1UF, , 16V | 1 | PAVCCZ |
| | | C8616 | F1G1C104A146 | C 0.1UF, , 16V | 1 | PAVCCZ |
| | | C8617 | F1G1E103A172 | C 0.01UF, K, 25V | 1 | PAVCCZ |
| | | C8619 | F1G1C104A146 | C 0.1UF, , 16V | 1 | PAVCCZ |
| | | C8620 | F1G1C104A146 | C 0.1UF, , 16V | 1 | PAVCCZ |
| | | C8627 | F1G1C104A146 | C 0.1UF, , 16V | 1 | PAVCCZ |
| | | C8628 | F1K0J226A049 | C 22UF, , 6.3V | 1 | PAVCCZ |
| | | C8629 | F1K0J226A049 | C 22UF, , 6.3V | 1 | PAVCCZ |
| | | C8632 | F1J1A106A043 | C 10UF, , 10V | 1 | PAVCCZ |
| | | C8633 | F1G1C104A146 | C 0.1UF, , 16V | 1 | PAVCCZ |
| | | C8637 | F1J1A106A043 | C 10UF, , 10V | 1 | PAVCCZ |
| | | C8638 | F1G1C104A146 | C 0.1UF, , 16V | 1 | PAVCCZ |
| | | C8639 | F1J1A106A043 | C 10UF, , 10V | 1 | PAVCCZ |
| | | C8640 | F1G1C104A146 | C 0.1UF, , 16V | 1 | PAVCCZ |
| | | C8642 | F1J1A106A043 | C 10UF, , 10V | 1 | PAVCCZ |
| | | C8643 | F1G1C104A146 | C 0.1UF, , 16V | 1 | PAVCCZ |
| | | C8644 | F1G1E103A172 | C 0.01UF, K, 25V | 1 | PAVCCZ |
| | | C8645 | F1G1C104A146 | C 0.1UF, , 16V | 1 | PAVCCZ |
| | | C8646 | F1G1C104A146 | C 0.1UF, , 16V | 1 | PAVCCZ |
| | | C8649 | F1G1C104A146 | C 0.1UF, , 16V | 1 | PAVCCZ |
| | | C8652 | F1G1C104A146 | C 0.1UF, , 16V | 1 | PAVCCZ |
| | | C8655 | F1G1C104A146 | C 0.1UF, , 16V | 1 | PAVCCZ |
| | | C8658 | F1J1A106A043 | C 10UF, , 10V | 1 | PAVCCZ |
| | | C8659 | F1G1C104A146 | C 0.1UF, , 16V | 1 | PAVCCZ |
| | | C8674 | F1G1C104A146 | C 0.1UF, , 16V | 1 | PAVCCZ |
| | | C8675 | F1G1C104A146 | C 0.1UF, , 16V | 1 | PAVCCZ |
| | | C8676 | F1G1C104A146 | C 0.1UF, , 16V | 1 | PAVCCZ |
| | | C8678 | F1J1A106A043 | C 10UF, , 10V | 1 | PAVCCZ |
| | | C8679 | F1J1A106A043 | C 10UF, , 10V | 1 | PAVCCZ |
| | | C8682 | F1J1A106A043 | C 10UF, , 10V | 1 | PAVCCZ |
| | | C8690 | F1J1A106A043 | C 10UF, , 10V | 1 | PAVCCZ |
| | | C8691 | F1J1A106A043 | C 10UF, , 10V | 1 | PAVCCZ |
| | | C8692 | F1G1A105A047 | C 1000NF, , 10V | 1 | PAVCCZ |

## Model No. : TX-55AS650B+E Parts List

| Change | Safety | Ref. No. | Part No. | Part Name & Description | Q'ty | Remarks |
|---|---|---|---|---|---|---|
| | | C8694 | F1J1A106A043 | C 10UF, , 10V | 1 | PAVCCZ |
| | | C8722 | F1K1V106A010 | C 10UF, , 35V | 1 | PAVCCZ |
| | | C8723 | F1H1E104A161 | C 0.1UF, , 25V | 1 | PAVCCZ |
| | | C8724 | F1J1A106A043 | C 10UF, , 10V | 1 | PAVCCZ |
| | | C8725 | F1J1A106A043 | C 10UF, , 10V | 1 | PAVCCZ |
| | | C8727 | F1G1H680A834 | C 68PF, , 50 V | 1 | PAVCCZ |
| | | C8728 | F1G1H102A946 | C 1000PF, K, 50V | 1 | PAVCCZ |
| | | C8731 | F1G1E103A172 | C 0.01UF, K, 25V | 1 | PAVCCZ |
| | | C8732 | F1K1V106A010 | C 10UF, , 35V | 1 | PAVCCZ |
| | | C8733 | F1J1A106A043 | C 10UF, , 10V | 1 | PAVCCZ |
| | | C8734 | F1J1A106A043 | C 10UF, , 10V | 1 | PAVCCZ |
| | | C8737 | F1G1C104A146 | C 0.1UF, , 16V | 1 | PAVCCZ |
| | | C8738 | F1G1H222A946 | C 2200PF, K, 50V | 1 | PAVCCZ |
| | | C8739 | F1G1C473A146 | C 0.047UF, -, 16V | 1 | PAVCCZ |
| | | C8749 | F1G1A105A047 | C 1000NF, , 10V | 1 | PAVCCZ |
| | | C8750 | F1G1A105A047 | C 1000NF, , 10V | 1 | PAVCCZ |
| | | C8753 | F1G1A105A047 | C 1000NF, , 10V | 1 | PAVCCZ |
| | | C8754 | F1G1A105A047 | C 1000NF, , 10V | 1 | PAVCCZ |
| | | C8773 | F1G1C104A146 | C 0.1UF, , 16V | 1 | PAVCCZ |
| | | C8790 | F1J1A106A043 | C 10UF, , 10V | 1 | PAVCCZ |
| | | C8791 | F1J1A106A043 | C 10UF, , 10V | 1 | PAVCCZ |
| | | C8903 | F1G1C104A146 | C 0.1UF, , 16V | 1 | PAVCCZ |
| | | C8910 | F1H1E105A153 | C 1000NF, , 25V | 1 | PAVCCZ |
| | | C8911 | F1G1C104A146 | C 0.1UF, , 16V | 1 | PAVCCZ |
| | | C8912 | F1J1A106A043 | C 10UF, , 10V | 1 | PAVCCZ |
| | | C8913 | F1G1C104A146 | C 0.1UF, , 16V | 1 | PAVCCZ |
| | | C8914 | F1J1A106A043 | C 10UF, , 10V | 1 | PAVCCZ |
| | | C8915 | F1G1H100A948 | C 10PF, J, 50V | 1 | PAVCCZ |
| | | C9050 | F1G1H221A834 | C 220PF, -, 50V | 1 | PAVCCZ |
| | | C9051 | F1G1H221A834 | C 220PF, -, 50V | 1 | PAVCCZ |
| | | C9052 | F1G1H221A834 | C 220PF, -, 50V | 1 | PAVCCZ |
| | | C9053 | F1G1H221A834 | C 220PF, -, 50V | 1 | PAVCCZ |
| | | C9054 | F1G1H221A834 | C 220PF, -, 50V | 1 | PAVCCZ |
| | | | | | | |
| | | CF7104 | D4CA94R0A001 | NTC THERMISTOR | 1 | PAVCCZ |
| | | | | | | |
| | | CN0100 | K1KA14A00248 | 14P CONNECTOR | 1 | PAVCCZ |
| | | | | | | |
| | | D2230 | B0JCCE000021 | DIODE | 1 | PAVCCZ |
| | | D2800 | DZ2J056M0L | ZENER DIODE | 1 | PAVCCZ |
| | | D2802 | B3AGB0000083 | LED | 1 | PAVCCZ |
| | | D2851 | DZ2J068M0L | DIODE | 1 | PAVCCZ |
| | | D2852 | DZ2J068M0L | DIODE | 1 | PAVCCZ |
| | | D3007 | DZ2J140M0L | DIODE | 1 | PAVCCZ |
| | | D3008 | DZ2J140M0L | DIODE | 1 | PAVCCZ |
| | | D3009 | DZ2J140M0L | DIODE | 1 | PAVCCZ |
| | | D3010 | DZ2J140M0L | DIODE | 1 | PAVCCZ |
| | | D3011 | DZ2J140M0L | DIODE | 1 | PAVCCZ |
| | | D3012 | DZ2J140M0L | DIODE | 1 | PAVCCZ |
| | | D3013 | DZ2J140M0L | DIODE | 1 | PAVCCZ |
| | | D3014 | DZ2J140M0L | DIODE | 1 | PAVCCZ |
| | | D3021 | DZ2J140M0L | DIODE | 1 | PAVCCZ |
| | | D3022 | DZ2J140M0L | DIODE | 1 | PAVCCZ |
| | | D3023 | DZ2J140M0L | DIODE | 1 | PAVCCZ |
| | | D3024 | DZ2J140M0L | DIODE | 1 | PAVCCZ |
| | | D3025 | DZ2J140M0L | DIODE | 1 | PAVCCZ |
| | | D3026 | DZ2J140M0L | DIODE | 1 | PAVCCZ |
| | | D3101 | K7AAAY000014 | OPTICAL LINK | 1 | PAVCCZ |
| | | D4723 | DZ2J056M0L | ZENER DIODE | 1 | PAVCCZ |
| | | D4724 | DZ2J056M0L | ZENER DIODE | 1 | PAVCCZ |
| | | D4761 | DZ2J056M0L | ZENER DIODE | 1 | PAVCCZ |
| | | D4773 | B0JCED000012 | DIODE | 1 | PAVCCZ |

## Model No. : TX-55AS650B+E Parts List

| Change | Safety | Ref. No. | Part No. | Part Name & Description | Q'ty | Remarks |
|---|---|---|---|---|---|---|
| | | D5172 | DZ2J180M0L | ZENER DIODE | 1 | PAVCCZ |
| | | D5173 | DA2J10100L | DIODE | 1 | PAVCCZ |
| | | D5178 | DZ2J100M0L | ZENER DIODE | 1 | PAVCCZ |
| | | D5180 | DZ2J033M0L | DIODE | 1 | PAVCCZ |
| | | D5188 | B0ADCK000001 | DIODE | 1 | PAVCCZ |
| | ⚠ | D7101 | ERZE08C621CD | VARISTOR | 1 | PAVCCZ |
| | | D7104 | B0AAMT000014 | DIODE | 1 | PAVCCZ |
| | | D7105 | B0AAMT000014 | DIODE | 1 | PAVCCZ |
| | ⚠ | D7110 | B0EBNT000030 | DIODE | 1 | PAVCCZ |
| | | D7211 | B0ACCD000008 | DIODE | 1 | PAVCCZ |
| | | D7215 | B0HAPR000013 | DIODE | 1 | PAVCCZ |
| | | D7221 | B0ACCD000008 | DIODE | 1 | PAVCCZ |
| | | D7301 | DZ2J039M0L | ZENER DIODE | 1 | PAVCCZ |
| | | D7302 | B0HAGQ000001 | DIODE | 1 | PAVCCZ |
| | | D7303 | DZ2J039M0L | ZENER DIODE | 1 | PAVCCZ |
| | | D7304 | B0ECKM000053 | DIODE | 1 | PAVCCZ |
| | | D7305 | B0ADCK000001 | DIODE | 1 | PAVCCZ |
| | | D7306 | B0BC027A0336 | DIODE | 1 | PAVCCZ |
| | | D7307 | B0BC027A0336 | DIODE | 1 | PAVCCZ |
| | | D7308 | B0BC027A0336 | DIODE | 1 | PAVCCZ |
| | | D7311 | B0BC027A0336 | DIODE | 1 | PAVCCZ |
| | | D7312 | B0ACCD000008 | DIODE | 1 | PAVCCZ |
| | | D7313 | B0ACCD000008 | DIODE | 1 | PAVCCZ |
| | | D7403 | B0JBSL000047 | DIODE | 1 | PAVCCZ |
| | | D7404 | DA2J10100L | DIODE | 1 | PAVCCZ |
| | | D7405 | B0ACCD000008 | DIODE | 1 | PAVCCZ |
| | | D7407 | B0JBSL000047 | DIODE | 1 | PAVCCZ |
| | | D7411 | B0ACCD000008 | DIODE | 1 | PAVCCZ |
| | | D7412 | B0JBSL000046 | DIODE | 1 | PAVCCZ |
| | | D7413 | B0JBSL000046 | DIODE | 1 | PAVCCZ |
| | | D7502 | B0JCPE000051 | DIODE | 1 | PAVCCZ |
| | | D7810 | B0ACCD000008 | DIODE | 1 | PAVCCZ |
| | | D7811 | B0ECKM000053 | DIODE | 1 | PAVCCZ |
| | | D7817 | B0JBSL000077 | DIODE | 1 | PAVCCZ |
| | | D8710 | B0ACGM000001 | DIODE | 1 | PAVCCZ |
| | | | | | | |
| | ⚠ | F7101 | K5E502YYA213 | FUSE | 1 | PAVCCZ |
| | | | | | | |
| | | GK4 | K1KY03BA0402 | 3P CONNECTOR | 1 | PAVCCZ |
| | | | | | | |
| | | IC3052 | C0ABBB000179 | IC DUAL OPERATIONAL AMPLIFIER | 1 | PAVCCZ |
| | | IC4900 | C1AB00003984 | IC DIG AUDIO POWER AMPLIFIER | 1 | PAVCCZ |
| | | IC5000 | AN34043AAVF | IC ANALOG ASIC | 1 | PAVCCZ |
| | | IC5300 | C0DBAYY01644 | IC STEP-DOWN DC/DC CONVERTER | 1 | PAVCCZ |
| | | IC5702 | C0DBAYY01656 | IC DC/DC CONVERTER | 1 | PAVCCZ |
| | | IC5704 | C0DBEYY00102 | IC REGULATOR | 1 | PAVCCZ |
| | | IC6800 | C1AB00004028 | IC DVB-T2/T/C DEMODULATOR | 1 | PAVCCZ |
| | | IC7201 | C0DBBYY00058 | IC PFC | 1 | PAVCCZ |
| | | IC7301 | C0DBAYY01329 | IC CURRENT RESONANT CONTROLLER | 1 | PAVCCZ |
| | | IC7401 | C0DBZYY00531 | IC SHUNT REGULATOR | 1 | PAVCCZ |
| | | IC7503 | C0DBAYY01915 | IC DC/DC CONVERTER | 1 | PAVCCZ |
| | | IC7800 | C0ZBZ0002164 | IC LED DRIVER FOR BACKLIGHT | 1 | PAVCCZ |
| | | IC7801 | C0ZBZ0001936 | IC SWITCHING DRIVER | 1 | PAVCCZ |
| | | IC8000 | MN2WS0280PB | IC PEAKS LD6 | 1 | PAVCCZ |
| | | IC8100 | NN30332A-VB | IC DC/DC CONVERTER | 1 | PAVCCZ |
| | | IC8101 | C0DBAYY01644 | IC STEP-DOWN DC/DC CONVERTER | 1 | PAVCCZ |
| | | IC8200 | C3ABUY000056 | IC 2GBIT DDR3 SDRAM | 1 | PAVCCZ |
| | | IC8201 | C3ABUY000056 | IC 2GBIT DDR3 SDRAM | 1 | PAVCCZ |
| | | IC8202 | C3ABVY000026 | IC 4GBIT DDR3+SDRAM | 1 | PAVCCZ |
| | | IC8400 | C0DBZYY00382 | IC SWITCH | 1 | PAVCCZ |
| | | IC8601 | C1CB00004168 | IC USB HUB | 1 | PAVCCZ |
| | | IC8602 | C0DBZYY00723 | IC SWITCH | 1 | PAVCCZ |

## Model No. : TX-55AS650B+E Parts List

| Change | Safety | Ref. No. | Part No. | Part Name & Description | Q'ty | Remarks |
|---|---|---|---|---|---|---|
| | | IC8603 | C0DBZYY00723 | IC SWITCH | 1 | PAVCCZ |
| | | IC8606 | C0DBZYY00723 | IC SWITCH | 1 | PAVCCZ |
| | | IC8650 | C1CB00003736 | IC LAN CONTROLLER | 1 | PAVCCZ |
| | | IC8660 | C0DBEYY00102 | IC REGULATOR | 1 | PAVCCZ |
| | | IC8704 | C0DBAYY01647 | IC DC/DC CONVERTER | 1 | PAVCCZ |
| | | IC8705 | C0DBAYY01299 | IC STEP-DOWN DC/DC CONVERTER | 1 | PAVCCZ |
| | | IC8712 | C0DBGYY00887 | IC REGULATOR | 1 | PAVCCZ |
| | | IC8715 | C0DBGYY00887 | IC REGULATOR | 1 | PAVCCZ |
| | | IC8901 | STM55AS650B | IC EEPROM STM | 1 | (TX-55AS650B) PAVCCZ |
| | | IC8901 | STM55AS650E | IC EEPROM STM | 1 | (TX-55AS650E) PAVCCZ |
| | | IC8903 | TVR55AS650B | IC NAND FLASH 4GB EMMC | 1 | (TX-55AS650B) PAVCCZ |
| | | IC8903 | TVR55AS650E | IC NAND FLASH 4GB EMMC | 1 | (TX-55AS650E) PAVCCZ |
| | | | | | | |
| | | JA1 | D0GDR00J0004 | M 0 OHM, J, 1/8W | 1 | PAVCCZ |
| | | JA2 | D0GDR00J0004 | M 0 OHM, J, 1/8W | 1 | PAVCCZ |
| | | JA4 | D0GDR00J0004 | M 0 OHM, J, 1/8W | 1 | PAVCCZ |
| | | JA5 | D0GDR00J0004 | M 0 OHM, J, 1/8W | 1 | PAVCCZ |
| | | JA6 | D0GDR00J0004 | M 0 OHM, J, 1/8W | 1 | PAVCCZ |
| | | JA7 | D0GDR00J0004 | M 0 OHM, J, 1/8W | 1 | PAVCCZ |
| | | JA8 | D0GDR00J0004 | M 0 OHM, J, 1/8W | 1 | PAVCCZ |
| | | | | | | |
| | | JK3001B | K1U511D00002 | YUV_V/AUDIO IN TERMINAL | 1 | PAVCCZ |
| | | JK3011 | K1FY121D0001 | 21P SCART TERMINAL | 1 | PAVCCZ |
| | | JK3111A | K2HC1YYB0079 | HP TERMINAL | 1 | PAVCCZ |
| | | JK4701 | K1FY119E0066 | HDMI TERMINAL | 1 | PAVCCZ |
| | | JK4702 | K1FY119E0066 | HDMI TERMINAL | 1 | PAVCCZ |
| | | JK4703 | K1FY119E0066 | HDMI TERMINAL | 1 | PAVCCZ |
| | ⚠ | JK7101 | K2AAYB000010 | AC INLET | 1 | PAVCCZ |
| | | JK8400A | K1NA68B00064 | CI CONNECTOR | 1 | PAVCCZ |
| | | JK8600 | K1NA12E00016 | SD SLOT | 1 | PAVCCZ |
| | | JK8601 | K1FY104B0095 | USB TERMINAL | 1 | PAVCCZ |
| | | JK8602 | K2LC1YYE0003 | ETHERNET TERMINAL | 1 | PAVCCZ |
| | | JK8603A | K1FY104B0095 | USB TERMINAL | 1 | PAVCCZ |
| | | JK8605 | K1FY105E0025 | USB TERMINAL | 1 | PAVCCZ |
| | | | | | | |
| | | JS7406 | D0GDR00J0004 | M 0 OHM, J, 1/8W | 1 | PAVCCZ |
| | | | | | | |
| | | K10 | K1KY07BA0483 | 7P CONNECTOR | 1 | PAVCCZ |
| | | | | | | |
| | | L2200 | J0JYC0000464 | FILTER | 1 | PAVCCZ |
| | | L4006 | J0ZZB0000147 | FILTER | 1 | PAVCCZ |
| | | L4007 | J0ZZB0000147 | FILTER | 1 | PAVCCZ |
| | | L4008 | J0ZZB0000147 | FILTER | 1 | PAVCCZ |
| | | L4009 | J0ZZB0000147 | FILTER | 1 | PAVCCZ |
| | | L4010 | J0ZZB0000147 | FILTER | 1 | PAVCCZ |
| | | L4011 | J0ZZB0000147 | FILTER | 1 | PAVCCZ |
| | | L4012 | J0ZZB0000147 | FILTER | 1 | PAVCCZ |
| | | L4013 | J0ZZB0000147 | FILTER | 1 | PAVCCZ |
| | | L4014 | J0ZZB0000147 | FILTER | 1 | PAVCCZ |
| | | L4015 | J0ZZB0000147 | FILTER | 1 | PAVCCZ |
| | | L4016 | J0ZZB0000147 | FILTER | 1 | PAVCCZ |
| | | L4017 | J0ZZB0000147 | FILTER | 1 | PAVCCZ |
| | | L4901 | G1C220MA0533 | COIL | 1 | PAVCCZ |
| | | L4902 | G1C220MA0533 | COIL | 1 | PAVCCZ |
| | | L4903 | G1C220MA0533 | COIL | 1 | PAVCCZ |
| | | L4904 | G1C220MA0533 | COIL | 1 | PAVCCZ |
| | | L5300 | G1C150MA0445 | COIL | 1 | PAVCCZ |
| | | L5700 | G1C2R2MA0464 | COIL | 1 | PAVCCZ |
| | | L5701 | J0JYC0000464 | FILTER | 1 | PAVCCZ |
| | | L6704 | J0JYC0000464 | FILTER | 1 | PAVCCZ |
| | | L6706 | J0JYC0000464 | FILTER | 1 | PAVCCZ |
| | | L6801 | J0JYC0000464 | FILTER | 1 | PAVCCZ |

## Model No. : TX-55AS650B+E Parts List

| Change | Safety | Ref. No. | Part No. | Part Name & Description | Q'ty | Remarks |
|---|---|---|---|---|---|---|
| | | L6804 | J0JYC0000464 | FILTER | 1 | PAVCCZ |
| | | L7207 | EXCELSA35T | BEAD CHOKE | 1 | PAVCCZ |
| | | L7208 | EXCELSA35T | BEAD CHOKE | 1 | PAVCCZ |
| | | L7304 | EXCELSA35T | BEAD CHOKE | 1 | PAVCCZ |
| | | L7502 | G0C270MA0049 | COIL | 1 | PAVCCZ |
| | | L7800 | G0C470J00005 | COIL | 1 | PAVCCZ |
| | | L7804 | J0JHC0000075 | FILTER | 1 | PAVCCZ |
| | | L8001 | J0JYC0000464 | FILTER | 1 | PAVCCZ |
| | | L8002 | J0JYC0000686 | FILTER | 1 | PAVCCZ |
| | | L8003 | J0JYC0000686 | FILTER | 1 | PAVCCZ |
| | | L8100 | G1C1R0M00022 | COIL | 1 | PAVCCZ |
| | | L8101 | G1C3R3MA0464 | COIL | 1 | PAVCCZ |
| | | L8102 | J0JYC0000686 | FILTER | 1 | PAVCCZ |
| | | L8600 | J0ZZB0000142 | FILTER | 1 | PAVCCZ |
| | | L8601 | J0ZZB0000142 | FILTER | 1 | PAVCCZ |
| | | L8602 | J0ZZB0000142 | FILTER | 1 | PAVCCZ |
| | | L8604 | J0JYC0000464 | FILTER | 1 | PAVCCZ |
| | | L8605 | J0JYC0000464 | FILTER | 1 | PAVCCZ |
| | | L8606 | J0JYC0000464 | FILTER | 1 | PAVCCZ |
| | | L8607 | J0JYC0000464 | FILTER | 1 | PAVCCZ |
| | | L8608 | J0JYC0000464 | FILTER | 1 | PAVCCZ |
| | | L8615 | J0ZZB0000142 | FILTER | 1 | PAVCCZ |
| | | L8704 | G1C3R3ZA0388 | COIL | 1 | PAVCCZ |
| | | L8705 | G1C4R7ZA0311 | COIL | 1 | PAVCCZ |
| | | L8902 | J0JYC0000464 | FILTER | 1 | PAVCCZ |
| | | L8903 | J0JYC0000464 | FILTER | 1 | PAVCCZ |
| | | | | | | |
| | ⚠ | LF7104 | G0B183G00008 | LINE FILTER | 1 | PAVCCZ |
| | ⚠ | LF7105 | G0B350HA0036 | LINE FILTER | 1 | PAVCCZ |
| | ⚠ | LF7106 | G0B952G00002 | LINE FILTER | 1 | PAVCCZ |
| | | | | | | |
| | | P2 | K1KY20BA0491 | 20P CONNECTOR | 1 | PAVCCZ |
| | | P4 | K1KY12B00022 | 12P CONNECTOR | 1 | PAVCCZ |
| | | P5 | K1KY03BA0402 | 3P CONNECTOR | 1 | PAVCCZ |
| | | | | | | |
| | | PA2002 | K5H4022A0031 | FUSE | 1 | PAVCCZ |
| | | PA5703 | K5H1022A0031 | FUSE | 1 | PAVCCZ |
| | | PA7403 | K5G103AA0009 | FUSE | 1 | PAVCCZ |
| | | PA7406 | ERBRE5R00V | FUSE | 1 | PAVCCZ |
| | | PA8754 | K5H4022A0031 | FUSE | 1 | PAVCCZ |
| | | | | | | |
| | ⚠ | PC7301 | B3PAA0000674 | PHOTO COUPLER | 1 | PAVCCZ |
| | ⚠ | PC7302 | B3PAA0000674 | PHOTO COUPLER | 1 | PAVCCZ |
| | ⚠ | PC7303 | B3PAA0000674 | PHOTO COUPLER | 1 | PAVCCZ |
| | | | | | | |
| | | Q2210 | B1ABCF000231 | TRANSISTOR | 1 | PAVCCZ |
| | | Q2211 | B1ABCF000231 | TRANSISTOR | 1 | PAVCCZ |
| | | Q3051 | B1HFCEA00001 | TRANSISTOR | 1 | PAVCCZ |
| | | Q3052 | B1HFCEA00001 | TRANSISTOR | 1 | PAVCCZ |
| | | Q3053 | B1ADCE000022 | TRANSISTOR | 1 | PAVCCZ |
| | | Q3301 | B1ABKE000001 | TRANSISTOR | 1 | PAVCCZ |
| | | Q3302 | B1ABKE000001 | TRANSISTOR | 1 | PAVCCZ |
| | | Q3305 | B1ABKE000001 | TRANSISTOR | 1 | PAVCCZ |
| | | Q3306 | B1ABKE000001 | TRANSISTOR | 1 | PAVCCZ |
| | | Q3307 | B1ABCF000231 | TRANSISTOR | 1 | PAVCCZ |
| | | Q4700 | B1ABCF000231 | TRANSISTOR | 1 | PAVCCZ |
| | | Q4701 | B1ABCF000231 | TRANSISTOR | 1 | PAVCCZ |
| | | Q4750 | B1ABCF000231 | TRANSISTOR | 1 | PAVCCZ |
| | | Q7201 | B1CERR000096 | TRANSISTOR | 1 | PAVCCZ |
| | | Q7202 | B1ADGE000012 | TRANSISTOR | 1 | PAVCCZ |
| | | Q7301 | B1CFRR000028 | TRANSISTOR | 1 | PAVCCZ |
| | | Q7302 | B1CFRR000028 | TRANSISTOR | 1 | PAVCCZ |

## Model No. : TX-55AS650B+E Parts List

| Change | Safety | Ref. No. | Part No. | Part Name & Description | Q'ty | Remarks |
|---|---|---|---|---|---|---|
| | | Q7303 | B1ADCE000022 | TRANSISTOR | 1 | PAVCCZ |
| | | Q7401 | B1CFJD000007 | TRANSISTOR | 1 | PAVCCZ |
| | | Q7402 | B1CHRE000015 | TRANSISTOR | 1 | PAVCCZ |
| | | Q7403 | B1CHRE000015 | TRANSISTOR | 1 | PAVCCZ |
| | | Q7404 | B1CHRE000015 | TRANSISTOR | 1 | PAVCCZ |
| | | Q7406 | B1CFJD000007 | TRANSISTOR | 1 | PAVCCZ |
| | | Q7407 | B1ADCE000022 | TRANSISTOR | 1 | PAVCCZ |
| | | Q7800 | B1ABCF000231 | TRANSISTOR | 1 | PAVCCZ |
| | | Q7801 | B1CERM000047 | TRANSISTOR | 1 | PAVCCZ |
| | | Q7802 | B1BDBJ000001 | TRANSISTOR | 1 | PAVCCZ |
| | | Q7803 | B1BDBJ000001 | TRANSISTOR | 1 | PAVCCZ |
| | | Q7804 | B1BDBJ000001 | TRANSISTOR | 1 | PAVCCZ |
| | | Q7805 | B1BDBJ000001 | TRANSISTOR | 1 | PAVCCZ |
| | | Q7806 | B1BDBJ000001 | TRANSISTOR | 1 | PAVCCZ |
| | | Q7809 | B1BDBJ000001 | TRANSISTOR | 1 | PAVCCZ |
| | | Q7812 | B1CFJD000007 | TRANSISTOR | 1 | PAVCCZ |
| | | | | | | |
| | | R054 | D0GAR00J0005 | M 0 OHM, J, 1/16W | 1 | PAVCCZ |
| | | R085 | D0GAR00J0005 | M 0 OHM, J, 1/16W | 1 | PAVCCZ |
| | | R0902 | D0GA473JA039 | M 47K OHM, J, 1/16W | 1 | PAVCCZ |
| | | R0905 | D0GA272JA023 | M 2K7 OHM, J, 1/16W | 1 | PAVCCZ |
| | | R0906 | D0GA272JA023 | M 2K7 OHM, J, 1/16W | 1 | PAVCCZ |
| | | R0909 | D0GA272JA023 | M 2K7 OHM, J, 1/16W | 1 | PAVCCZ |
| | | R0910 | D0GA272JA023 | M 2K7 OHM, J, 1/16W | 1 | PAVCCZ |
| | | R0911 | D1H83324A042 | M 3K3 OHM, J, 1/16W | 1 | PAVCCZ |
| | | R0912 | D0GA101JA039 | M 100 OHM, J, 1/16W | 1 | PAVCCZ |
| | | R0913 | D0GA101JA039 | M 100 OHM, J, 1/16W | 1 | PAVCCZ |
| | | R0930 | D0GA470JA023 | M 47 OHM, J, 1/16W | 1 | PAVCCZ |
| | | R0931 | D0GA473JA039 | M 47K OHM, J, 1/16W | 1 | PAVCCZ |
| | | R0940 | D0GA470JA023 | M 47 OHM, J, 1/16W | 1 | PAVCCZ |
| | | R0945 | D0GA470JA023 | M 47 OHM, J, 1/16W | 1 | PAVCCZ |
| | | R0946 | D0GA470JA023 | M 47 OHM, J, 1/16W | 1 | PAVCCZ |
| | | R0952 | D0GA102JA039 | M 1K OHM, J, 1/16W | 1 | PAVCCZ |
| | | R0953 | D0GA101JA039 | M 100 OHM, J, 1/16W | 1 | PAVCCZ |
| | | R0954 | D0GA101JA039 | M 100 OHM, J, 1/16W | 1 | PAVCCZ |
| | | R0961 | D0GA272JA023 | M 2K7 OHM, J, 1/16W | 1 | PAVCCZ |
| | | R0962 | D0GA272JA023 | M 2K7 OHM, J, 1/16W | 1 | PAVCCZ |
| | | R0965 | D0GA470JA023 | M 47 OHM, J, 1/16W | 1 | PAVCCZ |
| | | R0966 | D0GA470JA023 | M 47 OHM, J, 1/16W | 1 | PAVCCZ |
| | | R0967 | D0GA470JA023 | M 47 OHM, J, 1/16W | 1 | PAVCCZ |
| | | R0968 | D0GA470JA023 | M 47 OHM, J, 1/16W | 1 | PAVCCZ |
| | | R0969 | D0GA470JA023 | M 47 OHM, J, 1/16W | 1 | PAVCCZ |
| | | R0970 | D0GAR00J0005 | M 0 OHM, J, 1/16W | 1 | PAVCCZ |
| | | R0971 | D0GAR00J0005 | M 0 OHM, J, 1/16W | 1 | PAVCCZ |
| | | R2004 | D0GA103JA039 | M 10K OHM, J, 1/16W | 1 | PAVCCZ |
| | | R2007 | D0GA680JA023 | M 68 OHM, J, 1/16W | 1 | PAVCCZ |
| | | R2008 | D0GA103JA039 | M 10K OHM, J, 1/16W | 1 | PAVCCZ |
| | | R2010 | D1BA7151A023 | M 7K15 OHM, F, 1/16W | 1 | PAVCCZ |
| | | R2011 | D0GA102JA039 | M 1K OHM, J, 1/16W | 1 | PAVCCZ |
| | | R2014 | D0GA472JA023 | M 4K7 OHM, J, 1/16W | 1 | PAVCCZ |
| | | R2015 | D0GA680JA023 | M 68 OHM, J, 1/16W | 1 | PAVCCZ |
| | | R2016 | D0GA103JA039 | M 10K OHM, J, 1/16W | 1 | PAVCCZ |
| | | R2017 | F1G1H102A946 | C 1000PF, K, 50V | 1 | PAVCCZ |
| | | R2040 | D0GA473JA039 | M 47K OHM, J, 1/16W | 1 | PAVCCZ |
| | | R2051 | D0GA680JA023 | M 68 OHM, J, 1/16W | 1 | PAVCCZ |
| | | R2152 | D0GA680JA023 | M 68 OHM, J, 1/16W | 1 | PAVCCZ |
| | | R2153 | D0GA680JA023 | M 68 OHM, J, 1/16W | 1 | PAVCCZ |
| | | R2154 | D0GA680JA023 | M 68 OHM, J, 1/16W | 1 | PAVCCZ |
| | | R2155 | D0GA103JA039 | M 10K OHM, J, 1/16W | 1 | PAVCCZ |
| | | R2156 | D0GA103JA039 | M 10K OHM, J, 1/16W | 1 | PAVCCZ |
| | | R2157 | D0GA103JA039 | M 10K OHM, J, 1/16W | 1 | PAVCCZ |
| | | R2158 | D0GA103JA039 | M 10K OHM, J, 1/16W | 1 | PAVCCZ |

## Model No. : TX-55AS650B+E Parts List

| Change | Safety | Ref. No. | Part No. | Part Name & Description | Q'ty | Remarks |
|---|---|---|---|---|---|---|
| | | R2159 | D0GA103JA039 | M 10K OHM, J, 1/16W | 1 | PAVCCZ |
| | | R2160 | D0GA103JA039 | M 10K OHM, J, 1/16W | 1 | PAVCCZ |
| | | R2161 | D0GA103JA039 | M 10K OHM, J, 1/16W | 1 | PAVCCZ |
| | | R2230 | D0GA102JA039 | M 1K OHM, J, 1/16W | 1 | PAVCCZ |
| | | R2240 | D0GA103JA039 | M 10K OHM, J, 1/16W | 1 | PAVCCZ |
| | | R2263 | D0GA470JA023 | M 47 OHM, J, 1/16W | 1 | PAVCCZ |
| | | R2267 | D0GAR00J0005 | M 0 OHM, J, 1/16W | 1 | PAVCCZ |
| | | R2273 | D0GA103JA039 | M 10K OHM, J, 1/16W | 1 | PAVCCZ |
| | | R2274 | D0GA473JA039 | M 47K OHM, J, 1/16W | 1 | PAVCCZ |
| | | R2275 | D0GAR00J0005 | M 0 OHM, J, 1/16W | 1 | PAVCCZ |
| | | R2276 | D0GA223JA023 | M 22K OHM, J, 1/16W | 1 | PAVCCZ |
| | | R2277 | D0GA473JA039 | M 47K OHM, J, 1/16W | 1 | PAVCCZ |
| | | R2278 | D0GAR00J0005 | M 0 OHM, J, 1/16W | 1 | PAVCCZ |
| | | R2804 | D0GBR00J0004 | M 0 OHM, J, 1/10W | 1 | PAVCCZ |
| | | R2807 | D0GBR00J0004 | M 0 OHM, J, 1/10W | 1 | PAVCCZ |
| | | R2820 | D0GB470JA065 | M 47 OHM, J, 1/10W | 1 | PAVCCZ |
| | | R2821 | D0GB332JA065 | M 3K3 OHM, J, 1/10W | 1 | PAVCCZ |
| | | R2822 | D0GD104JA052 | M 100K OHM, J, 1/8W | 1 | PAVCCZ |
| | | R2823 | D1BB4301A073 | M 4K3 OHM, F, 1/10W | 1 | PAVCCZ |
| | | R2824 | D1BB1001A073 | M 1K OHM, F, 1/10W | 1 | PAVCCZ |
| | | R2852 | D1BD1911A203 | M 1K91 OHM, F, 1/8W | 1 | PAVCCZ |
| | | R2853 | D1BD3091A203 | M 3K09 OHM, F, 1/8W | 1 | PAVCCZ |
| | | R2854 | D1BD6041A203 | M 6K04 OHM, F, 1/8W | 1 | PAVCCZ |
| | | R2855 | D1BD1692A203 | M 16K9 OHM, F, 1/8W | 1 | PAVCCZ |
| | | R3007 | D1HY2204A012 | M 22 OHM, J, 1/16W | 1 | PAVCCZ |
| | | R3011 | D0GAR00J0005 | M 0 OHM, J, 1/16W | 1 | PAVCCZ |
| | | R3012 | D1BD75R0A204 | M 75 OHM, F, 1/8W | 1 | PAVCCZ |
| | | R3013 | D1BD75R0A204 | M 75 OHM, F, 1/8W | 1 | PAVCCZ |
| | | R3014 | D1BD75R0A204 | M 75 OHM, F, 1/8W | 1 | PAVCCZ |
| | | R3015 | D1HY2204A012 | M 22 OHM, J, 1/16W | 1 | PAVCCZ |
| | | R3038 | D1BA1403A023 | M 140K OHM, F, 1/16W | 1 | PAVCCZ |
| | | R3041 | D0GA220JA023 | M 22 OHM, J, 1/16W | 1 | PAVCCZ |
| | | R3042 | D1BF75R0A073 | M 75 OHM, F, 1/4W | 1 | PAVCCZ |
| | | R3043 | D1BF75R0A073 | M 75 OHM, F, 1/4W | 1 | PAVCCZ |
| | | R3044 | D1BF75R0A073 | M 75 OHM, F, 1/4W | 1 | PAVCCZ |
| | | R3045 | D1BF75R0A073 | M 75 OHM, F, 1/4W | 1 | PAVCCZ |
| | | R3047 | D0GA470JA023 | M 47 OHM, J, 1/16W | 1 | PAVCCZ |
| | | R3053 | D0GA333JA023 | M 33K OHM, J, 1/16W | 1 | PAVCCZ |
| | | R3054 | D0GA333JA023 | M 33K OHM, J, 1/16W | 1 | PAVCCZ |
| | | R3056 | D1BA1403A023 | M 140K OHM, F, 1/16W | 1 | PAVCCZ |
| | | R3058 | D0GA101JA039 | M 100 OHM, J, 1/16W | 1 | PAVCCZ |
| | | R3060 | D0GA101JA039 | M 100 OHM, J, 1/16W | 1 | PAVCCZ |
| | | R3061 | D0GA304JA023 | M 300K OHM, J, 1/16W | 1 | PAVCCZ |
| | | R3062 | D0GA103JA039 | M 10K OHM, J, 1/16W | 1 | PAVCCZ |
| | | R3063 | D0GA104JA039 | M 100K OHM, J, 1/16W | 1 | PAVCCZ |
| | | R3064 | D0GAR00J0005 | M 0 OHM, J, 1/16W | 1 | PAVCCZ |
| | | R3068 | D1BA1403A023 | M 140K OHM, F, 1/16W | 1 | PAVCCZ |
| | | R3069 | D1BA1403A023 | M 140K OHM, F, 1/16W | 1 | PAVCCZ |
| | | R3070 | D0GA103JA039 | M 10K OHM, J, 1/16W | 1 | PAVCCZ |
| | | R3071 | D0GA102JA039 | M 1K OHM, J, 1/16W | 1 | PAVCCZ |
| | | R3072 | D0GA102JA039 | M 1K OHM, J, 1/16W | 1 | PAVCCZ |
| | | R3073 | D0GA152JA023 | M 1K5 OHM, J, 1/16W | 1 | PAVCCZ |
| | | R3074 | D0GA152JA023 | M 1K5 OHM, J, 1/16W | 1 | PAVCCZ |
| | | R3079 | D0GA101JA039 | M 100 OHM, J, 1/16W | 1 | PAVCCZ |
| | | R3080 | D0GA101JA039 | M 100 OHM, J, 1/16W | 1 | PAVCCZ |
| | | R3102 | D0GAR00J0005 | M 0 OHM, J, 1/16W | 1 | PAVCCZ |
| | | R3103 | D0GAR00J0005 | M 0 OHM, J, 1/16W | 1 | PAVCCZ |
| | | R3117 | D0GA102JA039 | M 1K OHM, J, 1/16W | 1 | PAVCCZ |
| | | R3118 | D0GA102JA039 | M 1K OHM, J, 1/16W | 1 | PAVCCZ |
| | | R3129 | D0GA471JA023 | M 470 OHM, J, 1/16W | 1 | PAVCCZ |
| | | R3132 | D0GA103JA039 | M 10K OHM, J, 1/16W | 1 | PAVCCZ |
| | | R3137 | D1BD75R0A204 | M 75 OHM, F, 1/8W | 1 | PAVCCZ |

## Model No. : TX-55AS650B+E Parts List

| Change | Safety | Ref. No. | Part No. | Part Name & Description | Q'ty | Remarks |
|---|---|---|---|---|---|---|
| | | R3167 | D0GA333JA023 | M 33K OHM, J, 1/16W | 1 | PAVCCZ |
| | | R3168 | D0GA333JA023 | M 33K OHM, J, 1/16W | 1 | PAVCCZ |
| | | R3202 | D1BF75R0A073 | M 75 OHM, F, 1/4W | 1 | PAVCCZ |
| | | R3231 | D0GA103JA039 | M 10K OHM, J, 1/16W | 1 | PAVCCZ |
| | | R3233 | D0GA203JA023 | M 20K OHM, J, 1/16W | 1 | PAVCCZ |
| | | R3234 | D0GA203JA023 | M 20K OHM, J, 1/16W | 1 | PAVCCZ |
| | | R3237 | D0GA103JA039 | M 10K OHM, J, 1/16W | 1 | PAVCCZ |
| | | R3238 | D0GA103JA039 | M 10K OHM, J, 1/16W | 1 | PAVCCZ |
| | | R3309 | D0GA331JA023 | M 330 OHM, J, 1/16W | 1 | PAVCCZ |
| | | R3310 | D0GA331JA023 | M 330 OHM, J, 1/16W | 1 | PAVCCZ |
| | | R3312 | D0GA103JA039 | M 10K OHM, J, 1/16W | 1 | PAVCCZ |
| | | R3314 | D0GA103JA039 | M 10K OHM, J, 1/16W | 1 | PAVCCZ |
| | | R3317 | D0GA104JA039 | M 100K OHM, J, 1/16W | 1 | PAVCCZ |
| | | R3318 | D0GA104JA039 | M 100K OHM, J, 1/16W | 1 | PAVCCZ |
| | | R3319 | D0GA272JA023 | M 2K7 OHM, J, 1/16W | 1 | PAVCCZ |
| | | R3320 | D0GA272JA023 | M 2K7 OHM, J, 1/16W | 1 | PAVCCZ |
| | | R3326 | D0GB272JA065 | M 2K7 OHM, J, 1/10W | 1 | PAVCCZ |
| | | R3327 | D0GB272JA065 | M 2K7 OHM, J, 1/10W | 1 | PAVCCZ |
| | | R3329 | D0GA473JA039 | M 47K OHM, J, 1/16W | 1 | PAVCCZ |
| | | R3330 | D0GA103JA039 | M 10K OHM, J, 1/16W | 1 | PAVCCZ |
| | | R4102 | D0GAR00J0005 | M 0 OHM, J, 1/16W | 1 | PAVCCZ |
| | | R4104 | D0GA103JA039 | M 10K OHM, J, 1/16W | 1 | PAVCCZ |
| | | R4106 | D0GA103JA039 | M 10K OHM, J, 1/16W | 1 | PAVCCZ |
| | | R4107 | D0GAR00J0005 | M 0 OHM, J, 1/16W | 1 | PAVCCZ |
| | | R4700 | D0GA103JA039 | M 10K OHM, J, 1/16W | 1 | PAVCCZ |
| | | R4701 | D0GA103JA039 | M 10K OHM, J, 1/16W | 1 | PAVCCZ |
| | | R4702 | D0GA103JA039 | M 10K OHM, J, 1/16W | 1 | PAVCCZ |
| | | R4703 | D0GA103JA039 | M 10K OHM, J, 1/16W | 1 | PAVCCZ |
| | | R4705 | D0GA102JA039 | M 1K OHM, J, 1/16W | 1 | PAVCCZ |
| | | R4706 | D0GA470JA023 | M 47 OHM, J, 1/16W | 1 | PAVCCZ |
| | | R4707 | D0GA680JA023 | M 68 OHM, J, 1/16W | 1 | PAVCCZ |
| | | R4708 | D0GA680JA023 | M 68 OHM, J, 1/16W | 1 | PAVCCZ |
| | | R4709 | D0GA680JA023 | M 68 OHM, J, 1/16W | 1 | PAVCCZ |
| | | R4710 | D0GA680JA023 | M 68 OHM, J, 1/16W | 1 | PAVCCZ |
| | | R4711 | D0GA103JA039 | M 10K OHM, J, 1/16W | 1 | PAVCCZ |
| | | R4712 | D0GA103JA039 | M 10K OHM, J, 1/16W | 1 | PAVCCZ |
| | | R4713 | D0GA103JA039 | M 10K OHM, J, 1/16W | 1 | PAVCCZ |
| | | R4715 | D0GA102JA039 | M 1K OHM, J, 1/16W | 1 | PAVCCZ |
| | | R4717 | D0GA473JA039 | M 47K OHM, J, 1/16W | 1 | PAVCCZ |
| | | R4718 | D0GA473JA039 | M 47K OHM, J, 1/16W | 1 | PAVCCZ |
| | | R4720 | D0GA473JA039 | M 47K OHM, J, 1/16W | 1 | PAVCCZ |
| | | R4721 | D0GA473JA039 | M 47K OHM, J, 1/16W | 1 | PAVCCZ |
| | | R4722 | D1BA1600A023 | M 160 OHM, F, 1/16W | 1 | PAVCCZ |
| | | R4723 | D1BA82R0A023 | M 82 OHM, F, 1/16W | 1 | PAVCCZ |
| | | R4751 | D0GA103JA039 | M 10K OHM, J, 1/16W | 1 | PAVCCZ |
| | | R4752 | D0GA103JA039 | M 10K OHM, J, 1/16W | 1 | PAVCCZ |
| | | R4753 | D0GA103JA039 | M 10K OHM, J, 1/16W | 1 | PAVCCZ |
| | | R4755 | D0GA102JA039 | M 1K OHM, J, 1/16W | 1 | PAVCCZ |
| | | R4757 | D0GA473JA039 | M 47K OHM, J, 1/16W | 1 | PAVCCZ |
| | | R4758 | D0GA473JA039 | M 47K OHM, J, 1/16W | 1 | PAVCCZ |
| | | R4759 | D0GA680JA023 | M 68 OHM, J, 1/16W | 1 | PAVCCZ |
| | | R4760 | D0GA680JA023 | M 68 OHM, J, 1/16W | 1 | PAVCCZ |
| | | R4798 | D0GA273JA023 | M 27K OHM, J, 1/16W | 1 | PAVCCZ |
| | | R4900 | D0GA103JA039 | M 10K OHM, J, 1/16W | 1 | PAVCCZ |
| | | R4901 | D0GFR00J0005 | M 0 OHM, J, 1/4W | 1 | PAVCCZ |
| | | R4902 | D1H86804A042 | M 68 OHM, J, 1/16W | 1 | PAVCCZ |
| | | R4903 | D0GA102JA039 | M 1K OHM, J, 1/16W | 1 | PAVCCZ |
| | | R4904 | D0GA102JA039 | M 1K OHM, J, 1/16W | 1 | PAVCCZ |
| | | R4909 | D0GA103JA039 | M 10K OHM, J, 1/16W | 1 | PAVCCZ |
| | | R4910 | D0GA473JA039 | M 47K OHM, J, 1/16W | 1 | PAVCCZ |
| | | R4913 | D0GA102JA039 | M 1K OHM, J, 1/16W | 1 | PAVCCZ |
| | | R5002 | D0GA683JA023 | M 68K OHM, J, 1/16W | 1 | PAVCCZ |

## Model No. : TX-55AS650B+E Parts List

| Change | Safety | Ref. No. | Part No. | Part Name & Description | Q'ty | Remarks |
|---|---|---|---|---|---|---|
| | | R5003 | D0GA103JA039 | M 10K OHM, J, 1/16W | 1 | PAVCCZ |
| | | R5006 | D0GA623JA023 | M 62K OHM, J, 1/16W | 1 | PAVCCZ |
| | | R5007 | D0GA243JA023 | M 24K OHM, J, 1/16W | 1 | PAVCCZ |
| | | R5009 | D1BA5602A023 | M 56K OHM, F, 1/16W | 1 | PAVCCZ |
| | | R5012 | D1BA2202A023 | M 22K OHM, F, 1/16W | 1 | PAVCCZ |
| | | R5015 | D0GAR00J0005 | M 0 OHM, J, 1/16W | 1 | PAVCCZ |
| | | R5018 | D0GA182JA023 | M 1K8 OHM, J, 1/16W | 1 | PAVCCZ |
| | | R5030 | D0GA103JA039 | M 10K OHM, J, 1/16W | 1 | PAVCCZ |
| | | R5100 | D0GA101JA039 | M 100 OHM, J, 1/16W | 1 | PAVCCZ |
| | | R5101 | D0GA473JA039 | M 47K OHM, J, 1/16W | 1 | PAVCCZ |
| | | R5102 | D0GA473JA039 | M 47K OHM, J, 1/16W | 1 | PAVCCZ |
| | | R5104 | D0GA103JA039 | M 10K OHM, J, 1/16W | 1 | PAVCCZ |
| | | R5152 | D0GA272JA023 | M 2K7 OHM, J, 1/16W | 1 | PAVCCZ |
| | | R5174 | D0GA103JA039 | M 10K OHM, J, 1/16W | 1 | PAVCCZ |
| | | R5175 | D0GA681JA023 | M 680 OHM, J, 1/16W | 1 | PAVCCZ |
| | | R5176 | D0GB101JA065 | M 100 OHM, J, 1/10W | 1 | PAVCCZ |
| | | R5312 | D0GA220JA023 | M 22 OHM, J, 1/16W | 1 | PAVCCZ |
| | | R5315 | D1BA1402A023 | M 14K OHM, F, 1/16W | 1 | PAVCCZ |
| | | R5316 | D1BA1001A023 | M 1K OHM, F, 1/16W | 1 | PAVCCZ |
| | | R5318 | D1BA2002A023 | M 20K OHM, F, 1/16W | 1 | PAVCCZ |
| | | R5707 | D0GBR00J0004 | M 0 OHM, J, 1/10W | 1 | PAVCCZ |
| | | R5715 | D1BA1502A023 | M 15K OHM, F, 1/16W | 1 | PAVCCZ |
| | | R5716 | D1BA6041A023 | M 6K04 OHM, F, 1/16W | 1 | PAVCCZ |
| | | R5717 | D0GA123JA023 | M 12K OHM, J, 1/16W | 1 | PAVCCZ |
| | | R5731 | D1BA1200A023 | M 120 OHM, F, 1/16W | 1 | PAVCCZ |
| | | R5732 | D1BA56R0A023 | M 56 OHM, F, 1/16W | 1 | PAVCCZ |
| | | R5736 | D0GA103JA039 | M 10K OHM, J, 1/16W | 1 | PAVCCZ |
| | | R6720 | D0GA221JA023 | M 220 OHM, J, 1/16W | 1 | PAVCCZ |
| | | R6721 | D0GA221JA023 | M 220 OHM, J, 1/16W | 1 | PAVCCZ |
| | | R6734 | D0GA103JA039 | M 10K OHM, J, 1/16W | 1 | PAVCCZ |
| | | R6804 | D0GA471JA023 | M 470 OHM, J, 1/16W | 1 | PAVCCZ |
| | | R6806 | D0GA103JA039 | M 10K OHM, J, 1/16W | 1 | PAVCCZ |
| | | R6809 | D0GAR00J0005 | M 0 OHM, J, 1/16W | 1 | PAVCCZ |
| | | R6810 | D0GAR00J0005 | M 0 OHM, J, 1/16W | 1 | PAVCCZ |
| | | R6811 | D0GAR00J0005 | M 0 OHM, J, 1/16W | 1 | PAVCCZ |
| | | R6815 | D0GA680JA023 | M 68 OHM, J, 1/16W | 1 | PAVCCZ |
| | | R6817 | D0GA680JA023 | M 68 OHM, J, 1/16W | 1 | PAVCCZ |
| | | R6818 | D0GAR00J0005 | M 0 OHM, J, 1/16W | 1 | PAVCCZ |
| | | R6819 | D0GAR00J0005 | M 0 OHM, J, 1/16W | 1 | PAVCCZ |
| | | R6821 | D0GA680JA023 | M 68 OHM, J, 1/16W | 1 | PAVCCZ |
| | | R6825 | D0GA332JA023 | M 3K3 OHM, J, 1/16W | 1 | PAVCCZ |
| | | R6828 | D0GA680JA023 | M 68 OHM, J, 1/16W | 1 | PAVCCZ |
| | | R6829 | D0GA680JA023 | M 68 OHM, J, 1/16W | 1 | PAVCCZ |
| | | R6830 | D0GA680JA023 | M 68 OHM, J, 1/16W | 1 | PAVCCZ |
| | | R6834 | D0GA680JA023 | M 68 OHM, J, 1/16W | 1 | PAVCCZ |
| | | R6835 | D0GA680JA023 | M 68 OHM, J, 1/16W | 1 | PAVCCZ |
| | | R6836 | D0GA680JA023 | M 68 OHM, J, 1/16W | 1 | PAVCCZ |
| | | R6837 | D0GA680JA023 | M 68 OHM, J, 1/16W | 1 | PAVCCZ |
| | | R6843 | D0GBR00J0004 | M 0 OHM, J, 1/10W | 1 | PAVCCZ |
| | | R6863 | D0GAR00J0005 | M 0 OHM, J, 1/16W | 1 | PAVCCZ |
| | | R6895 | D0GA332JA023 | M 3K3 OHM, J, 1/16W | 1 | PAVCCZ |
| | | R6896 | D0GA332JA023 | M 3K3 OHM, J, 1/16W | 1 | PAVCCZ |
| | | R6899 | D0GA680JA023 | M 68 OHM, J, 1/16W | 1 | PAVCCZ |
| | ⚠ | R7101 | D0GF474JA048 | M 470K OHM, J, 1/3W | 1 | PAVCCZ |
| | ⚠ | R7102 | D0GF474JA048 | M 470K OHM, J, 1/3W | 1 | PAVCCZ |
| | ⚠ | R7103 | D0GF474JA048 | M 470K OHM, J, 1/3W | 1 | PAVCCZ |
| | | R7104 | D0GD102JA052 | M 1K OHM, J, 1/8W | 1 | PAVCCZ |
| | | R7105 | D0GD102JA052 | M 1K OHM, J, 1/8W | 1 | PAVCCZ |
| | | R7201 | ERX1SJR22V | M R22 OHM, J, 1W | 1 | PAVCCZ |
| | | R7202 | ERX1SJR22V | M R22 OHM, J, 1W | 1 | PAVCCZ |
| | | R7203 | D1BB5602A143 | M 56K OHM, F, 1/10W | 1 | PAVCCZ |
| | | R7204 | D0GZ181JA020 | M 180 OHM, J, 1/2W | 1 | PAVCCZ |

| Change | Safety | Ref. No. | Part No. | Part Name & Description | Q'ty | Remarks |
|---|---|---|---|---|---|---|
| | | R7205 | D0GB101JA065 | M 100 OHM, J, 1/10W | 1 | PAVCCZ |
| | | R7206 | D0GD4R7JA059 | M 4R7 OHM, J, 1/4W | 1 | PAVCCZ |
| | | R7207 | D0GB103JA065 | M 10K OHM, J, 1/10W | 1 | PAVCCZ |
| | | R7209 | D0GB100JA065 | M 10 OHM, J, 1/10W | 1 | PAVCCZ |
| | | R7212 | D1BB6802A143 | M 68K OHM, F, 1/10W | 1 | PAVCCZ |
| | | R7219 | D0GB513JA065 | M 51K OHM, J, 1/10W | 1 | PAVCCZ |
| | | R7220 | D0GB223JA065 | M 22K OHM, J, 1/10W | 1 | PAVCCZ |
| | | R7224 | D1AB2704A023 | M 2M7 OHM, J, 1/4W | 1 | PAVCCZ |
| | | R7225 | D1AB2704A023 | M 2M7 OHM, J, 1/4W | 1 | PAVCCZ |
| | | R7226 | D1AB2404A023 | M 2M4 OHM, J, 1/4W | 1 | PAVCCZ |
| | | R7227 | D1AB3004A023 | M 3M OHM, J, 1/4W | 1 | PAVCCZ |
| | | R7230 | D1BB3302A143 | M 33K OHM, F, 1/10W | 1 | PAVCCZ |
| | | R7231 | D1BB3602A143 | M 36K OHM, F, 1/10W | 1 | PAVCCZ |
| | | R7245 | D0GF220JA048 | M 22 OHM, , 1/4W | 1 | PAVCCZ |
| | | R7246 | D0GZ181JA020 | M 180 OHM, J, 1/2W | 1 | PAVCCZ |
| | | R7302 | D0GF391JA048 | M 390 OHM, -, 1/3W | 1 | PAVCCZ |
| | | R7303 | D0GF391JA048 | M 390 OHM, -, 1/3W | 1 | PAVCCZ |
| | | R7304 | D0GF4R7JA048 | M 4R7 OHM, J, 1/4W | 1 | PAVCCZ |
| | | R7305 | D0GF121JA048 | M 120 OHM, J, 1/4W | 1 | PAVCCZ |
| | | R7306 | D0GD222JA052 | M 2K2 OHM, J, 1/8W | 1 | PAVCCZ |
| | | R7307 | D0GD562JA052 | M 5K6 OHM, J, 1/8W | 1 | PAVCCZ |
| | | R7308 | D0GD222JA052 | M 2K2 OHM, J, 1/8W | 1 | PAVCCZ |
| | ⚠ | R7311 | D0XB106JA018 | M 10M OHM, J, 1W | 1 | PAVCCZ |
| | | R7312 | D1BB1502A143 | M 15K OHM, F, 1/10W | 1 | PAVCCZ |
| | | R7314 | D0GB104JA065 | M 100K OHM, J, 1/10W | 1 | PAVCCZ |
| | | R7315 | D0GB222JA065 | M 2K2 OHM, J, 1/10W | 1 | PAVCCZ |
| | | R7317 | D0GB223JA065 | M 22K OHM, J, 1/10W | 1 | PAVCCZ |
| | | R7318 | D0GB473JA065 | M 47K OHM, J, 1/10W | 1 | PAVCCZ |
| | | R7319 | D0GB473JA065 | M 47K OHM, J, 1/10W | 1 | PAVCCZ |
| | | R7320 | D0GB103JA065 | M 10K OHM, J, 1/10W | 1 | PAVCCZ |
| | | R7321 | D0GF220JA048 | M 22 OHM, , 1/4W | 1 | PAVCCZ |
| | | R7322 | D0GF220JA048 | M 22 OHM, , 1/4W | 1 | PAVCCZ |
| | | R7323 | D0GB103JA065 | M 10K OHM, J, 1/10W | 1 | PAVCCZ |
| | | R7324 | D0GB103JA065 | M 10K OHM, J, 1/10W | 1 | PAVCCZ |
| | | R7385 | D0GF100JA048 | M 10 OHM, J, 1/10W | 1 | PAVCCZ |
| | | R7387 | D0GF4R7JA048 | M 4R7 OHM, J, 1/4W | 1 | PAVCCZ |
| | | R7401 | D0GB472JA065 | M 4K7 OHM, J, 1/10W | 1 | PAVCCZ |
| | | R7402 | D0GB103JA065 | M 10K OHM, J, 1/10W | 1 | PAVCCZ |
| | | R7403 | D0GB102JA065 | M 1K OHM, J, 1/10W | 1 | PAVCCZ |
| | | R7404 | D0GB224JA065 | M 220K OHM, J, 1/10W | 1 | PAVCCZ |
| | | R7405 | D0GD222JA052 | M 2K2 OHM, J, 1/8W | 1 | PAVCCZ |
| | | R7406 | D0GB332ZA038 | M 3K3 OHM, -, 1/10W | 1 | PAVCCZ |
| | | R7407 | D0GB223JA065 | M 22K OHM, J, 1/10W | 1 | PAVCCZ |
| | | R7408 | D1BB1742A143 | M 17K4 OHM, F, 1/10W | 1 | PAVCCZ |
| | | R7409 | D0GB104JA065 | M 100K OHM, J, 1/10W | 1 | PAVCCZ |
| | | R7410 | D0GB153JA065 | M 15K OHM, J, 1/10W | 1 | PAVCCZ |
| | | R7411 | D0GB224JA065 | M 220K OHM, J, 1/10W | 1 | PAVCCZ |
| | | R7412 | D0GB153JA065 | M 15K OHM, J, 1/10W | 1 | PAVCCZ |
| | | R7416 | D0GD103JA052 | M 10K OHM, J, 1/8W | 1 | PAVCCZ |
| | | R7417 | D0GD103JA052 | M 10K OHM, J, 1/8W | 1 | PAVCCZ |
| | | R7420 | D0GB473JA065 | M 47K OHM, J, 1/10W | 1 | PAVCCZ |
| | | R7421 | D0GD124JA052 | M 120K OHM, J, 1/8W | 1 | PAVCCZ |
| | | R7425 | ERX1SJ1R0V | M 1 OHM, J, 1W | 1 | PAVCCZ |
| | | R7427 | D0GB223JA065 | M 22K OHM, J, 1/10W | 1 | PAVCCZ |
| | | R7428 | D0GB154JA065 | M 150K OHM, J, 1/10W | 1 | PAVCCZ |
| | | R7429 | D0GB104JA065 | M 100K OHM, J, 1/10W | 1 | PAVCCZ |
| | | R7430 | D0GB104JA065 | M 100K OHM, J, 1/10W | 1 | PAVCCZ |
| | | R7504 | D0GD104JA052 | M 100K OHM, J, 1/8W | 1 | PAVCCZ |
| | | R7509 | D0GD224JA052 | M 220K OHM, J, 1/8W | 1 | PAVCCZ |
| | | R7533 | D1BB7872A106 | M 78K7 OHM, F, 1/10W | 1 | PAVCCZ |
| | | R7534 | D1BB1432A106 | M 14K3 OHM, F, 1/10W | 1 | PAVCCZ |
| | | R7535 | D0GB100JA065 | M 10 OHM, J, 1/10W | 1 | PAVCCZ |

## Model No. : TX-55AS650B+E Parts List

| Change | Safety | Ref. No. | Part No. | Part Name & Description | Q'ty | Remarks |
|---|---|---|---|---|---|---|
| | | R7536 | D0GB514JA065 | M 510K OHM, J, 1/10W | 1 | PAVCCZ |
| | | R7800 | D0GB103JA065 | M 10K OHM, J, 1/10W | 1 | PAVCCZ |
| | | R7801 | D0GB473JA065 | M 47K OHM, J, 1/10W | 1 | PAVCCZ |
| | | R7802 | D1BD2R40A066 | M 2R4 OHM, F, 1/8W | 1 | PAVCCZ |
| | | R7803 | D1BD2R40A066 | M 2R4 OHM, F, 1/8W | 1 | PAVCCZ |
| | | R7804 | D1BD2R40A066 | M 2R4 OHM, F, 1/8W | 1 | PAVCCZ |
| | | R7805 | D1BD2R40A066 | M 2R4 OHM, F, 1/8W | 1 | PAVCCZ |
| | | R7806 | D1BD2R40A066 | M 2R4 OHM, F, 1/8W | 1 | PAVCCZ |
| | | R7807 | D1BD2R40A066 | M 2R4 OHM, F, 1/8W | 1 | PAVCCZ |
| | | R7808 | D0GB473JA065 | M 47K OHM, J, 1/10W | 1 | PAVCCZ |
| | | R7809 | D1BB1203A143 | M 120K OHM, F, 1/10W | 1 | PAVCCZ |
| | | R7810 | D1BB4702A143 | M 47K OHM, F, 1/10W | 1 | PAVCCZ |
| | | R7811 | D0GB122JA065 | M 1K2 OHM, J, 1/10W | 1 | PAVCCZ |
| | | R7812 | D1BB1503A143 | M 150K OHM, F, 1/10W | 1 | PAVCCZ |
| | | R7815 | ERX1SJR22V | M R22 OHM, J, 1W | 1 | PAVCCZ |
| | | R7816 | ERX1SJR22V | M R22 OHM, J, 1W | 1 | PAVCCZ |
| | | R7817 | ERX1SJR22V | M R22 OHM, J, 1W | 1 | PAVCCZ |
| | | R7818 | ERX1SJR22V | M R22 OHM, J, 1W | 1 | PAVCCZ |
| | | R7820 | D1BB1403A143 | M 140K OHM, F, 1/10W | 1 | PAVCCZ |
| | | R7821 | D1BB1202A143 | M 120K OHM, F, 1/10W | 1 | PAVCCZ |
| | | R7822 | D0GB114JA065 | M 110K OHM, J, 1/10W | 1 | PAVCCZ |
| | | R7823 | D0GB203JA065 | M 20K OHM, J, 1/10W | 1 | PAVCCZ |
| | | R7824 | D0GD470JA059 | M 47 OHM, J, 1/4W | 1 | PAVCCZ |
| | | R7825 | D0GB473JA065 | M 47K OHM, J, 1/10W | 1 | PAVCCZ |
| | | R7827 | D0GD101JA052 | M 100 OHM, J, 1/8W | 1 | PAVCCZ |
| | | R7828 | D0GBR00J0004 | M 0 OHM, J, 1/10W | 1 | PAVCCZ |
| | | R7831 | D0GBR00J0004 | M 0 OHM, J, 1/10W | 1 | PAVCCZ |
| | | R7833 | D0GD100JA059 | M 10 OHM, J, 1/4W | 1 | PAVCCZ |
| | | R7834 | D0GBR00J0004 | M 0 OHM, J, 1/10W | 1 | PAVCCZ |
| | | R7838 | D0GB470JA065 | M 47 OHM, J, 1/10W | 1 | PAVCCZ |
| | | R7839 | D0GB473JA065 | M 47K OHM, J, 1/10W | 1 | PAVCCZ |
| | | R7840 | D0GB473JA065 | M 47K OHM, J, 1/10W | 1 | PAVCCZ |
| | | R7841 | D0GB473JA065 | M 47K OHM, J, 1/10W | 1 | PAVCCZ |
| | | R7842 | D0GB473JA065 | M 47K OHM, J, 1/10W | 1 | PAVCCZ |
| | | R7843 | D0GB473JA065 | M 47K OHM, J, 1/10W | 1 | PAVCCZ |
| | | R7846 | D0GB101JA065 | M 100 OHM, J, 1/10W | 1 | PAVCCZ |
| | | R7847 | D0GB101JA065 | M 100 OHM, J, 1/10W | 1 | PAVCCZ |
| | | R7848 | D0GB101JA065 | M 100 OHM, J, 1/10W | 1 | PAVCCZ |
| | | R7849 | D0GB101JA065 | M 100 OHM, J, 1/10W | 1 | PAVCCZ |
| | | R7850 | D0GB101JA065 | M 100 OHM, J, 1/10W | 1 | PAVCCZ |
| | | R7851 | D0GB101JA065 | M 100 OHM, J, 1/10W | 1 | PAVCCZ |
| | | R7857 | D1BB1403A143 | M 140K OHM, F, 1/10W | 1 | PAVCCZ |
| | | R7858 | D0GB473JA065 | M 47K OHM, J, 1/10W | 1 | PAVCCZ |
| | | R7861 | D0GB104JA065 | M 100K OHM, J, 1/10W | 1 | PAVCCZ |
| | | R7862 | D1BB1913A143 | M 191K OHM, F, 1/10W | 1 | PAVCCZ |
| | | R7863 | D0GB473JA065 | M 47K OHM, J, 1/10W | 1 | PAVCCZ |
| | | R7864 | D1BD2R40A066 | M 2R4 OHM, F, 1/8W | 1 | PAVCCZ |
| | | R7865 | D1BD2R40A066 | M 2R4 OHM, F, 1/8W | 1 | PAVCCZ |
| | | R7866 | D1BD2R40A066 | M 2R4 OHM, F, 1/8W | 1 | PAVCCZ |
| | | R7867 | D1BD2R40A066 | M 2R4 OHM, F, 1/8W | 1 | PAVCCZ |
| | | R7868 | D1BD2R40A066 | M 2R4 OHM, F, 1/8W | 1 | PAVCCZ |
| | | R7869 | D1BD2R40A066 | M 2R4 OHM, F, 1/8W | 1 | PAVCCZ |
| | | R7870 | D1BB6982A143 | M 69K8 OHM, F, 1/10W | 1 | PAVCCZ |
| | | R7871 | D1BD2R40A066 | M 2R4 OHM, F, 1/8W | 1 | PAVCCZ |
| | | R7872 | D1BD2R40A066 | M 2R4 OHM, F, 1/8W | 1 | PAVCCZ |
| | | R7873 | D1BD2R40A066 | M 2R4 OHM, F, 1/8W | 1 | PAVCCZ |
| | | R7874 | D1BD2R40A066 | M 2R4 OHM, F, 1/8W | 1 | PAVCCZ |
| | | R7875 | D1BD2R40A066 | M 2R4 OHM, F, 1/8W | 1 | PAVCCZ |
| | | R7876 | D1BD2R40A066 | M 2R4 OHM, F, 1/8W | 1 | PAVCCZ |
| | | R7877 | D1BD2R40A066 | M 2R4 OHM, F, 1/8W | 1 | PAVCCZ |
| | | R7878 | D1BD2R40A066 | M 2R4 OHM, F, 1/8W | 1 | PAVCCZ |
| | | R7879 | D1BD2R40A066 | M 2R4 OHM, F, 1/8W | 1 | PAVCCZ |

## Model No. : TX-55AS650B+E Parts List

| Change | Safety | Ref. No. | Part No. | Part Name & Description | Q'ty | Remarks |
|---|---|---|---|---|---|---|
| | | R7880 | D1BD2R40A066 | M 2R4 OHM, F, 1/8W | 1 | PAVCCZ |
| | | R7881 | D1BD2R40A066 | M 2R4 OHM, F, 1/8W | 1 | PAVCCZ |
| | | R7882 | D1BD2R40A066 | M 2R4 OHM, F, 1/8W | 1 | PAVCCZ |
| | | R8010 | D0GA511JA023 | M 510 OHM, J, 1/16W | 1 | PAVCCZ |
| | | R8012 | D0GA1R1JA023 | M 1R1 OHM, J, 1/16W | 1 | PAVCCZ |
| | | R8108 | D1BA4701A023 | M 4K7 OHM, F, 1/16W | 1 | PAVCCZ |
| | | R8109 | D1BA2002A023 | M 20K OHM, F, 1/16W | 1 | PAVCCZ |
| | | R8110 | D1BA1802A014 | M 18K OHM, F, 1/16W | 1 | PAVCCZ |
| | | R8200 | D1BA2400A023 | M 240 OHM, F, 1/16W | 1 | PAVCCZ |
| | | R8203 | D1BA2400A023 | M 240 OHM, F, 1/16W | 1 | PAVCCZ |
| | | R8206 | D1BA2400A023 | M 240 OHM, F, 1/16W | 1 | PAVCCZ |
| | | R8217 | D0GA221JA023 | M 220 OHM, J, 1/16W | 1 | PAVCCZ |
| | | R8218 | D0GA221JA023 | M 220 OHM, J, 1/16W | 1 | PAVCCZ |
| | | R8219 | D1BA2400A023 | M 240 OHM, F, 1/16W | 1 | PAVCCZ |
| | | R8220 | D1BA2400A023 | M 240 OHM, F, 1/16W | 1 | PAVCCZ |
| | | R8221 | D0GA103JA039 | M 10K OHM, J, 1/16W | 1 | PAVCCZ |
| | | R8230 | D1BA2400A023 | M 240 OHM, F, 1/16W | 1 | PAVCCZ |
| | | R8231 | D1BA2400A023 | M 240 OHM, F, 1/16W | 1 | PAVCCZ |
| | | R8232 | D1BA2400A023 | M 240 OHM, F, 1/16W | 1 | PAVCCZ |
| | | R8233 | D1BA2400A023 | M 240 OHM, F, 1/16W | 1 | PAVCCZ |
| | | R8234 | D1BA2400A023 | M 240 OHM, F, 1/16W | 1 | PAVCCZ |
| | | R8236 | D1BA2400A023 | M 240 OHM, F, 1/16W | 1 | PAVCCZ |
| | | R8239 | D1BA2400A023 | M 240 OHM, F, 1/16W | 1 | PAVCCZ |
| | | R8242 | D0GA111JA023 | M 110 OHM, J, 1/16W | 1 | PAVCCZ |
| | | R8244 | D1BA2400A023 | M 240 OHM, F, 1/16W | 1 | PAVCCZ |
| | | R8245 | D0GA103JA039 | M 10K OHM, J, 1/16W | 1 | PAVCCZ |
| | | R8250 | D1BA2400A023 | M 240 OHM, F, 1/16W | 1 | PAVCCZ |
| | | R8251 | D1BA2400A023 | M 240 OHM, F, 1/16W | 1 | PAVCCZ |
| | | R8300 | D0GA360JA023 | M 36 OHM, J, 1/16W | 1 | PAVCCZ |
| | | R8301 | D0GA360JA023 | M 36 OHM, J, 1/16W | 1 | PAVCCZ |
| | | R8302 | D0GA360JA023 | M 36 OHM, J, 1/16W | 1 | PAVCCZ |
| | | R8303 | D1BA6201A023 | M 6K2 OHM, F, 1/16W | 1 | PAVCCZ |
| | | R8304 | D0GA331JA023 | M 330 OHM, J, 1/16W | 1 | PAVCCZ |
| | | R8305 | D1HY2204A012 | M 22 OHM, J, 1/16W | 1 | PAVCCZ |
| | | R8306 | D1HY2204A012 | M 22 OHM, J, 1/16W | 1 | PAVCCZ |
| | | R8307 | D1HY2204A012 | M 22 OHM, J, 1/16W | 1 | PAVCCZ |
| | | R8308 | D1HY2204A012 | M 22 OHM, J, 1/16W | 1 | PAVCCZ |
| | | R8309 | D1HY2204A012 | M 22 OHM, J, 1/16W | 1 | PAVCCZ |
| | | R8313 | D1HY4704A012 | M 47 OHM, J, 1/16W | 1 | PAVCCZ |
| | | R8314 | D1HY4704A012 | M 47 OHM, J, 1/16W | 1 | PAVCCZ |
| | | R8315 | D1HY4704A012 | M 47 OHM, J, 1/16W | 1 | PAVCCZ |
| | | R8316 | D1HY4704A012 | M 47 OHM, J, 1/16W | 1 | PAVCCZ |
| | | R8317 | D1HY4704A012 | M 47 OHM, J, 1/16W | 1 | PAVCCZ |
| | | R8320 | D0GA330JA023 | M 33 OHM, J, 1/16W | 1 | PAVCCZ |
| | | R8321 | D0GA330JA023 | M 33 OHM, J, 1/16W | 1 | PAVCCZ |
| | | R8322 | D0GA220JA023 | M 22 OHM, J, 1/16W | 1 | PAVCCZ |
| | | R8323 | D0GA330JA023 | M 33 OHM, J, 1/16W | 1 | PAVCCZ |
| | | R8324 | D0GA330JA023 | M 33 OHM, J, 1/16W | 1 | PAVCCZ |
| | | R8325 | D0GA220JA023 | M 22 OHM, J, 1/16W | 1 | PAVCCZ |
| | | R8326 | D0GA330JA023 | M 33 OHM, J, 1/16W | 1 | PAVCCZ |
| | | R8327 | D0GA330JA023 | M 33 OHM, J, 1/16W | 1 | PAVCCZ |
| | | R8328 | D0GA470JA023 | M 47 OHM, J, 1/16W | 1 | PAVCCZ |
| | | R8329 | D0GA470JA023 | M 47 OHM, J, 1/16W | 1 | PAVCCZ |
| | | R8330 | D0GA470JA023 | M 47 OHM, J, 1/16W | 1 | PAVCCZ |
| | | R8331 | D0GA470JA023 | M 47 OHM, J, 1/16W | 1 | PAVCCZ |
| | | R8332 | D0GA470JA023 | M 47 OHM, J, 1/16W | 1 | PAVCCZ |
| | | R8403 | D1H86804A042 | M 68 OHM, J, 1/16W | 1 | PAVCCZ |
| | | R8404 | D1H86804A042 | M 68 OHM, J, 1/16W | 1 | PAVCCZ |
| | | R8405 | D1H86804A042 | M 68 OHM, J, 1/16W | 1 | PAVCCZ |
| | | R8406 | D1H86804A042 | M 68 OHM, J, 1/16W | 1 | PAVCCZ |
| | | R8407 | D1H86804A042 | M 68 OHM, J, 1/16W | 1 | PAVCCZ |
| | | R8408 | D1H86804A042 | M 68 OHM, J, 1/16W | 1 | PAVCCZ |

## Model No. : TX-55AS650B+E Parts List

| Change | Safety | Ref. No. | Part No. | Part Name & Description | Q'ty | Remarks |
|---|---|---|---|---|---|---|
| | | R8410 | D0GA680JA023 | M 68 OHM, J, 1/16W | 1 | PAVCCZ |
| | | R8411 | D1H86804A042 | M 68 OHM, J, 1/16W | 1 | PAVCCZ |
| | | R8412 | D0GA680JA023 | M 68 OHM, J, 1/16W | 1 | PAVCCZ |
| | | R8413 | D0GA470JA023 | M 47 OHM, J, 1/16W | 1 | PAVCCZ |
| | | R8414 | D0GA470JA023 | M 47 OHM, J, 1/16W | 1 | PAVCCZ |
| | | R8415 | D0GA470JA023 | M 47 OHM, J, 1/16W | 1 | PAVCCZ |
| | | R8417 | D1HY4704A012 | M 47 OHM, J, 1/16W | 1 | PAVCCZ |
| | | R8418 | D1HY4704A012 | M 47 OHM, J, 1/16W | 1 | PAVCCZ |
| | | R8425 | D1H8R0040016 | M 0 OHM, -, - | 1 | PAVCCZ |
| | | R8426 | D1H8R0040016 | M 0 OHM, -, - | 1 | PAVCCZ |
| | | R8427 | D1H8R0040016 | M 0 OHM, -, - | 1 | PAVCCZ |
| | | R8428 | D1H8R0040016 | M 0 OHM, -, - | 1 | PAVCCZ |
| | | R8429 | D0GAR00J0005 | M 0 OHM, J, 1/16W | 1 | PAVCCZ |
| | | R8430 | D1H8R0040016 | M 0 OHM, -, - | 1 | PAVCCZ |
| | | R8431 | D1H8R0040016 | M 0 OHM, -, - | 1 | PAVCCZ |
| | | R8432 | D1H8R0040016 | M 0 OHM, -, - | 1 | PAVCCZ |
| | | R8433 | D1H8R0040016 | M 0 OHM, -, - | 1 | PAVCCZ |
| | | R8434 | D1H8R0040016 | M 0 OHM, -, - | 1 | PAVCCZ |
| | | R8435 | D1H8R0040016 | M 0 OHM, -, - | 1 | PAVCCZ |
| | | R8436 | D1H8R0040016 | M 0 OHM, -, - | 1 | PAVCCZ |
| | | R8437 | D1H8R0040016 | M 0 OHM, -, - | 1 | PAVCCZ |
| | | R8438 | D1H86804A042 | M 68 OHM, J, 1/16W | 1 | PAVCCZ |
| | | R8439 | D1H86804A042 | M 68 OHM, J, 1/16W | 1 | PAVCCZ |
| | | R8440 | D1H81034A042 | M 10K OHM, J, 1/16W | 1 | PAVCCZ |
| | | R8441 | D1H81034A042 | M 10K OHM, J, 1/16W | 1 | PAVCCZ |
| | | R8443 | D1H86804A042 | M 68 OHM, J, 1/16W | 1 | PAVCCZ |
| | | R8445 | D0GAR00J0005 | M 0 OHM, J, 1/16W | 1 | PAVCCZ |
| | | R8447 | D0GA103JA039 | M 10K OHM, J, 1/16W | 1 | PAVCCZ |
| | | R8448 | D0GA103JA039 | M 10K OHM, J, 1/16W | 1 | PAVCCZ |
| | | R8452 | D0GA223JA023 | M 22K OHM, J, 1/16W | 1 | PAVCCZ |
| | | R8453 | D0GA103JA039 | M 10K OHM, J, 1/16W | 1 | PAVCCZ |
| | | R8454 | D1H86804A042 | M 68 OHM, J, 1/16W | 1 | PAVCCZ |
| | | R8455 | D0GA680JA023 | M 68 OHM, J, 1/16W | 1 | PAVCCZ |
| | | R8456 | D0GA473JA039 | M 47K OHM, J, 1/16W | 1 | PAVCCZ |
| | | R8457 | D0GA473JA039 | M 47K OHM, J, 1/16W | 1 | PAVCCZ |
| | | R8458 | D0GA680JA023 | M 68 OHM, J, 1/16W | 1 | PAVCCZ |
| | | R8459 | D0GA473JA039 | M 47K OHM, J, 1/16W | 1 | PAVCCZ |
| | | R8460 | D0GA473JA039 | M 47K OHM, J, 1/16W | 1 | PAVCCZ |
| | | R8461 | D0GA680JA023 | M 68 OHM, J, 1/16W | 1 | PAVCCZ |
| | | R8462 | D1H86804A042 | M 68 OHM, J, 1/16W | 1 | PAVCCZ |
| | | R8463 | D0GA103JA039 | M 10K OHM, J, 1/16W | 1 | PAVCCZ |
| | | R8464 | D0GA223JA023 | M 22K OHM, J, 1/16W | 1 | PAVCCZ |
| | | R8601 | D1BA75R0A023 | M 75 OHM, F, 1/16W | 1 | PAVCCZ |
| | | R8602 | D1BA75R0A023 | M 75 OHM, F, 1/16W | 1 | PAVCCZ |
| | | R8603 | D1BA75R0A023 | M 75 OHM, F, 1/16W | 1 | PAVCCZ |
| | | R8604 | D1BA75R0A023 | M 75 OHM, F, 1/16W | 1 | PAVCCZ |
| | | R8606 | D1BA6200A023 | M 620 OHM, F, 1/16W | 1 | PAVCCZ |
| | | R8609 | D0GA103JA039 | M 10K OHM, J, 1/16W | 1 | PAVCCZ |
| | | R8610 | D0GA103JA039 | M 10K OHM, J, 1/16W | 1 | PAVCCZ |
| | | R8613 | D0GA104JA039 | M 100K OHM, J, 1/16W | 1 | PAVCCZ |
| | | R8614 | D0GA103JA039 | M 10K OHM, J, 1/16W | 1 | PAVCCZ |
| | | R8615 | D0GAR00J0005 | M 0 OHM, J, 1/16W | 1 | PAVCCZ |
| | | R8616 | D0GA473JA039 | M 47K OHM, J, 1/16W | 1 | PAVCCZ |
| | | R8619 | D0GAR00J0005 | M 0 OHM, J, 1/16W | 1 | PAVCCZ |
| | | R8622 | D0GAR00J0005 | M 0 OHM, J, 1/16W | 1 | PAVCCZ |
| | | R8624 | D0GA470JA023 | M 47 OHM, J, 1/16W | 1 | PAVCCZ |
| | | R8625 | D0GA470JA023 | M 47 OHM, J, 1/16W | 1 | PAVCCZ |
| | | R8626 | D0GA470JA023 | M 47 OHM, J, 1/16W | 1 | PAVCCZ |
| | | R8627 | D0GA470JA023 | M 47 OHM, J, 1/16W | 1 | PAVCCZ |
| | | R8628 | D0GA470JA023 | M 47 OHM, J, 1/16W | 1 | PAVCCZ |
| | | R8629 | D0GA470JA023 | M 47 OHM, J, 1/16W | 1 | PAVCCZ |
| | | R8630 | D1H81034A042 | M 10K OHM, J, 1/16W | 1 | PAVCCZ |

| Change | Safety | Ref. No. | Part No. | Part Name & Description | Q'ty | Remarks |
|---|---|---|---|---|---|---|
| | | R8631 | D0GA103JA039 | M 10K OHM, J, 1/16W | 1 | PAVCCZ |
| | | R8632 | D1H86804A042 | M 68 OHM, J, 1/16W | 1 | PAVCCZ |
| | | R8634 | D1H86804A042 | M 68 OHM, J, 1/16W | 1 | PAVCCZ |
| | | R8636 | D0GA220JA023 | M 22 OHM, J, 1/16W | 1 | PAVCCZ |
| | | R8637 | D0GA272JA023 | M 2K7 OHM, J, 1/16W | 1 | PAVCCZ |
| | | R8638 | D0GA272JA023 | M 2K7 OHM, J, 1/16W | 1 | PAVCCZ |
| | | R8639 | D0GA103JA039 | M 10K OHM, J, 1/16W | 1 | PAVCCZ |
| | | R8640 | D0GA103JA039 | M 10K OHM, J, 1/16W | 1 | PAVCCZ |
| | | R8643 | D0GA272JA023 | M 2K7 OHM, J, 1/16W | 1 | PAVCCZ |
| | | R8648 | D1H8R0040016 | M 0 OHM, -, - | 1 | PAVCCZ |
| | | R8650 | D0GA472JA023 | M 4K7 OHM, J, 1/16W | 1 | PAVCCZ |
| | | R8651 | D0GA152JA023 | M 1K5 OHM, J, 1/16W | 1 | PAVCCZ |
| | | R8652 | D0GA103JA039 | M 10K OHM, J, 1/16W | 1 | PAVCCZ |
| | | R8654 | D0GA680JA023 | M 68 OHM, J, 1/16W | 1 | PAVCCZ |
| | | R8655 | D0GA680JA023 | M 68 OHM, J, 1/16W | 1 | PAVCCZ |
| | | R8656 | D0GA680JA023 | M 68 OHM, J, 1/16W | 1 | PAVCCZ |
| | | R8657 | D0GA680JA023 | M 68 OHM, J, 1/16W | 1 | PAVCCZ |
| | | R8658 | D0GA680JA023 | M 68 OHM, J, 1/16W | 1 | PAVCCZ |
| | | R8659 | D0GA680JA023 | M 68 OHM, J, 1/16W | 1 | PAVCCZ |
| | | R8660 | D0GA680JA023 | M 68 OHM, J, 1/16W | 1 | PAVCCZ |
| | | R8661 | D0GA680JA023 | M 68 OHM, J, 1/16W | 1 | PAVCCZ |
| | | R8662 | D0GA680JA023 | M 68 OHM, J, 1/16W | 1 | PAVCCZ |
| | | R8663 | D0GA680JA023 | M 68 OHM, J, 1/16W | 1 | PAVCCZ |
| | | R8664 | D0GA680JA023 | M 68 OHM, J, 1/16W | 1 | PAVCCZ |
| | | R8665 | D0GA680JA023 | M 68 OHM, J, 1/16W | 1 | PAVCCZ |
| | | R8666 | D0GA472JA023 | M 4K7 OHM, J, 1/16W | 1 | PAVCCZ |
| | | R8667 | D1H8R0040016 | M 0 OHM, -, - | 1 | PAVCCZ |
| | | R8668 | D0GA472JA023 | M 4K7 OHM, J, 1/16W | 1 | PAVCCZ |
| | | R8670 | D1BA2491A023 | M 2K49 OHM, F, 1/16W | 1 | PAVCCZ |
| | | R8671 | D0GA472JA023 | M 4K7 OHM, J, 1/16W | 1 | PAVCCZ |
| | | R8675 | D1H81034A042 | M 10K OHM, J, 1/16W | 1 | PAVCCZ |
| | | R8676 | D1BB1200A143 | M 120 OHM, F, 1/10W | 1 | PAVCCZ |
| | | R8677 | D1BB2000A143 | M 200 OHM, F, 1/10W | 1 | PAVCCZ |
| | | R8680 | D0GAR00J0005 | M 0 OHM, J, 1/16W | 1 | PAVCCZ |
| | | R8682 | D0GA680JA023 | M 68 OHM, J, 1/16W | 1 | PAVCCZ |
| | | R8683 | D0GA472JA023 | M 4K7 OHM, J, 1/16W | 1 | PAVCCZ |
| | | R8684 | D1BA2872A023 | M 28K7 OHM, F, 1/16W | 1 | PAVCCZ |
| | | R8687 | D0GA680JA023 | M 68 OHM, J, 1/16W | 1 | PAVCCZ |
| | | R8690 | D0GA472JA023 | M 4K7 OHM, J, 1/16W | 1 | PAVCCZ |
| | | R8694 | D1BA2872A023 | M 28K7 OHM, F, 1/16W | 1 | PAVCCZ |
| | | R8695 | D1BA1652A023 | M 16K5 OHM, F, 1/16W | 1 | PAVCCZ |
| | | R8699 | D0GA103JA039 | M 10K OHM, J, 1/16W | 1 | PAVCCZ |
| | | R8702 | D0GAR00J0005 | M 0 OHM, J, 1/16W | 1 | PAVCCZ |
| | | R8703 | D0GAR00J0005 | M 0 OHM, J, 1/16W | 1 | PAVCCZ |
| | | R8704 | D0GAR00J0005 | M 0 OHM, J, 1/16W | 1 | PAVCCZ |
| | | R8705 | D0GAR00J0005 | M 0 OHM, J, 1/16W | 1 | PAVCCZ |
| | | R8714 | D0GBR00J0004 | M 0 OHM, J, 1/10W | 1 | PAVCCZ |
| | | R8715 | D0GAR00J0005 | M 0 OHM, J, 1/16W | 1 | PAVCCZ |
| | | R8718 | D0GAR00J0005 | M 0 OHM, J, 1/16W | 1 | PAVCCZ |
| | | R8719 | D0GA103JA039 | M 10K OHM, J, 1/16W | 1 | PAVCCZ |
| | | R8720 | D0GA473JA039 | M 47K OHM, J, 1/16W | 1 | PAVCCZ |
| | | R8723 | D0GA680JA023 | M 68 OHM, J, 1/16W | 1 | PAVCCZ |
| | | R8730 | D0GAR00J0005 | M 0 OHM, J, 1/16W | 1 | PAVCCZ |
| | | R8741 | D0GA220JA023 | M 22 OHM, J, 1/16W | 1 | PAVCCZ |
| | | R8742 | D0GA223JA023 | M 22K OHM, J, 1/16W | 1 | PAVCCZ |
| | | R8746 | D1BA6802A023 | M 68K OHM, F, 1/16W | 1 | PAVCCZ |
| | | R8747 | D1BA2102A023 | M 21K OHM, F, 1/16W | 1 | PAVCCZ |
| | | R8751 | D1BB4301A074 | M 4K3 OHM, D, 1/10W | 1 | PAVCCZ |
| | | R8752 | D1BB7870A143 | M 787 OHM, F, 1/10W | 1 | PAVCCZ |
| | | R8753 | D1BA2402A023 | M 24K OHM, F, 1/16W | 1 | PAVCCZ |
| | | R8785 | D0GA103JA039 | M 10K OHM, J, 1/16W | 1 | PAVCCZ |
| | | R8788 | D0GA102JA039 | M 1K OHM, J, 1/16W | 1 | PAVCCZ |

| Change | Safety | Ref. No. | Part No. | Part Name & Description | Q'ty | Remarks |
|---|---|---|---|---|---|---|
| | | R8802 | D0GA103JA039 | M 10K OHM, J, 1/16W | 1 | PAVCCZ |
| | | R8803 | D0GA103JA039 | M 10K OHM, J, 1/16W | 1 | PAVCCZ |
| | | R8804 | D0GA473JA039 | M 47K OHM, J, 1/16W | 1 | PAVCCZ |
| | | R8805 | D0GA473JA039 | M 47K OHM, J, 1/16W | 1 | PAVCCZ |
| | | R8806 | D0GA473JA039 | M 47K OHM, J, 1/16W | 1 | PAVCCZ |
| | | R8807 | D0GA473JA039 | M 47K OHM, J, 1/16W | 1 | PAVCCZ |
| | | R8808 | D0GA473JA039 | M 47K OHM, J, 1/16W | 1 | PAVCCZ |
| | | R8809 | D0GA473JA039 | M 47K OHM, J, 1/16W | 1 | PAVCCZ |
| | | R8811 | D0GA473JA039 | M 47K OHM, J, 1/16W | 1 | PAVCCZ |
| | | R8812 | D0GA473JA039 | M 47K OHM, J, 1/16W | 1 | PAVCCZ |
| | | R8813 | D0GA473JA039 | M 47K OHM, J, 1/16W | 1 | PAVCCZ |
| | | R8814 | D0GA473JA039 | M 47K OHM, J, 1/16W | 1 | PAVCCZ |
| | | R8820 | D0GA103JA039 | M 10K OHM, J, 1/16W | 1 | PAVCCZ |
| | | R8821 | D0GA103JA039 | M 10K OHM, J, 1/16W | 1 | PAVCCZ |
| | | R8822 | D0GA103JA039 | M 10K OHM, J, 1/16W | 1 | PAVCCZ |
| | | R8831 | D0GA103JA039 | M 10K OHM, J, 1/16W | 1 | PAVCCZ |
| | | R8832 | D0GA103JA039 | M 10K OHM, J, 1/16W | 1 | PAVCCZ |
| | | R8851 | D0GA473JA039 | M 47K OHM, J, 1/16W | 1 | PAVCCZ |
| | | R8854 | D0GA102JA039 | M 1K OHM, J, 1/16W | 1 | PAVCCZ |
| | | R8859 | D0GA103JA039 | M 10K OHM, J, 1/16W | 1 | PAVCCZ |
| | | R8901 | D0GA103JA039 | M 10K OHM, J, 1/16W | 1 | PAVCCZ |
| | | R8903 | D0GA472JA023 | M 4K7 OHM, J, 1/16W | 1 | PAVCCZ |
| | | R8910 | D0GA103JA039 | M 10K OHM, J, 1/16W | 1 | PAVCCZ |
| | | R8911 | D0GA103JA039 | M 10K OHM, J, 1/16W | 1 | PAVCCZ |
| | | R8912 | D0GA103JA039 | M 10K OHM, J, 1/16W | 1 | PAVCCZ |
| | | R8913 | D0GA103JA039 | M 10K OHM, J, 1/16W | 1 | PAVCCZ |
| | | R8919 | D0GA103JA039 | M 10K OHM, J, 1/16W | 1 | PAVCCZ |
| | | R8920 | D1H86804A042 | M 68 OHM, J, 1/16W | 1 | PAVCCZ |
| | | R8921 | D1H86804A042 | M 68 OHM, J, 1/16W | 1 | PAVCCZ |
| | | R8922 | D0GA680JA023 | M 68 OHM, J, 1/16W | 1 | PAVCCZ |
| | | R8923 | D0GA680JA023 | M 68 OHM, J, 1/16W | 1 | PAVCCZ |
| | | R8924 | D0GA220JA023 | M 22 OHM, J, 1/16W | 1 | PAVCCZ |
| | | R8925 | D0GA103JA039 | M 10K OHM, J, 1/16W | 1 | PAVCCZ |
| | | R9050 | D0GA680JA023 | M 68 OHM, J, 1/16W | 1 | PAVCCZ |
| | | R9051 | D0GA680JA023 | M 68 OHM, J, 1/16W | 1 | PAVCCZ |
| | | R9052 | D0GA680JA023 | M 68 OHM, J, 1/16W | 1 | PAVCCZ |
| | | R9053 | D0GA680JA023 | M 68 OHM, J, 1/16W | 1 | PAVCCZ |
| | | R9054 | D0GA680JA023 | M 68 OHM, J, 1/16W | 1 | PAVCCZ |
| | | R9057 | D0GA680JA023 | M 68 OHM, J, 1/16W | 1 | PAVCCZ |
| | | R9058 | D0GA103JA039 | M 10K OHM, J, 1/16W | 1 | PAVCCZ |
| | | | | | | |
| | | RM2800 | B3RBB0000018 | IR RECEIVER | 1 | PAVCCZ |
| | | | | | | |
| | | SN2800 | B3JB00000219 | AI SENSOR IC | 1 | PAVCCZ |
| | | | | | | |
| | | SW2851 | EVQ11G05R | LIGHT TOUCH SWITCH | 1 | PAVCCZ |
| | | SW2852 | EVQ11G05R | LIGHT TOUCH SWITCH | 1 | PAVCCZ |
| | | SW2853 | EVQ11G05R | LIGHT TOUCH SWITCH | 1 | PAVCCZ |
| | | SW2854 | EVQ11G05R | LIGHT TOUCH SWITCH | 1 | PAVCCZ |
| | | SW2855 | EVQ11G05R | LIGHT TOUCH SWITCH | 1 | PAVCCZ |
| | | SW2857 | EVQ11G05R | LIGHT TOUCH SWITCH | 1 | PAVCCZ |
| | | | | | | |
| | | T7201 | G4DYA0000496 | TRANSFORMER | 1 | PAVCCZ |
| | ⚠ | T7302 | G4DYA0000449 | TRANSFORMER | 1 | PAVCCZ |
| | | T8601 | G5BYC0000040 | TRANSFORMER | 1 | PAVCCZ |
| | | | | | | |
| | ⚠ | TU6705 | J3ACAAC00012 | TUNER A/DVB-T/T2/C | 1 | PAVCCZ |
| | | | | | | |
| | | X6800 | H0J410500003 | CRYSTAL 41MHZ | 1 | PAVCCZ |
| | | X8300 | H0J250500109 | CRYSTAL 25MHZ | 1 | PAVCCZ |
| | | X8600 | H0J120500097 | CRYSTAL | 1 | PAVCCZ |
| | | | | | | |

## Model No. : TX-55AS650B+E Parts List

| Change | Safety | Ref. No. | Part No. | Part Name & Description | Q'ty | Remarks |
|---|---|---|---|---|---|---|
| | | ZA050 | K4AD01D00008 | TERMINAL | 1 | PAVCCZ |
| | | ZA052 | K4AD01D00011 | TERMINAL | 1 | PAVCCZ |
| | | ZA054 | K4AD01D00011 | TERMINAL | 1 | PAVCCZ |
| | | ZA055 | K4AD01D00011 | TERMINAL | 1 | PAVCCZ |
| | | ZA062 | K4AD01D00008 | TERMINAL | 1 | PAVCCZ |
| | | ZA063 | K4AD01D00008 | TERMINAL | 1 | PAVCCZ |
| | | ZA064 | K4AD01D00008 | TERMINAL | 1 | PAVCCZ |
| | | ZA066 | K4AD01D00008 | TERMINAL | 1 | PAVCCZ |
| | | ZA067 | K4AD01D00008 | TERMINAL | 1 | PAVCCZ |
| | | ZA068 | K4AD01D00008 | TERMINAL | 1 | PAVCCZ |
| | | ZA070 | K4AD01D00008 | TERMINAL | 1 | PAVCCZ |
| | | ZA071 | K4AD01D00008 | TERMINAL | 1 | PAVCCZ |
| | | ZA072 | K4AD01D00008 | TERMINAL | 1 | PAVCCZ |
| | | ZA073 | K4AD01D00008 | TERMINAL | 1 | PAVCCZ |
| | | ZA074 | K4AD01D00008 | TERMINAL | 1 | PAVCCZ |
| | | ZA076 | K4AD01D00008 | TERMINAL | 1 | PAVCCZ |
| | | ZA077 | K4AD01D00008 | TERMINAL | 1 | PAVCCZ |
| | | ZA079 | K4AD01D00008 | TERMINAL | 1 | PAVCCZ |
| | | ZA080 | K4AD01D00008 | TERMINAL | 1 | PAVCCZ |
| | | ZA081 | K4AD01D00008 | TERMINAL | 1 | PAVCCZ |
| | | ZA082 | K4AD01D00008 | TERMINAL | 1 | PAVCCZ |
| | | ZA100 | K4AD01D00008 | TERMINAL | 1 | PAVCCZ |
| | | ZA7101 | K4AD01A00004 | TERMINAL | 1 | PAVCCZ |
| | | ZA7102 | K4AD01A00004 | TERMINAL | 1 | PAVCCZ |
| | | ZA7103 | K4AD01A00004 | TERMINAL | 1 | PAVCCZ |
| | | ZA7104 | K4AD01A00004 | TERMINAL | 1 | PAVCCZ |
| | | ZA7106 | K4AD01A00004 | TERMINAL | 1 | PAVCCZ |

A0449

# Schematic Diagrams Note

**IMPORTANT SAFETY NOTICE**
Components identified by ⚠ mark have special characteristics important for safety. When replacing any of these components, use only manufacturers' specified parts.

## NOTE

1. RESISTOR
   All resistors are carbon ¼W resistor, unless marked otherwise.
   Unit of resistance is OHM (Ω) (k=1,000, M=1,000,000)
2. CAPACITORS
   All capacitors are ceramic 50V unless marked otherwise.
   Unit of capacitance is μF unless otherwise stated.
3. COIL
   Unit of inductance is μH, unless otherwise stated.

4. TEST POINT
   Test Point Position

5. EARTH SYMBOL
   Chassis Earth (Cold)
   Line Earth (Hot)

6. VOLTAGE MEASUREMENT
   Voltage is measured by a D.C. voltmeter.
   Measurement conditions are as follows:

| | |
|---|---|
| Power source | 220V-240V AC, 50/60 Hz |
| Receiving Signal | Colour Bar signal (RF) |
| All customer controls | Maximum position |

7.
   Indicates the Video signal path
   Indicates the Audio signal path

These schematic diagrams are the latest at time of printing and are subject to change without notice.

## REMARKS

a. Do not touch the hot part, or the hot and cold parts at the same time, as you are liable to a shock hazard.
b. Do not short circuit the hot and cold circuits as electrical components may be damaged.
c. Do not connect an instrument, such as an oscilloscope, to the hot and cold circuits simultaneously as this may cause fuse failure. Connect the earth of the instruments to the earth connection of the circuit being measured.
d. Make sure to disconnect the power plug before removing the chassis.

## NOTE

1. The Power Supply Circuit contains a circuit area, which uses a separate power supply to isolate the earth connection. The circuit is defined by HOT and COLD indications in the schematic diagram. All circuits, except the Power Circuit, are COLD.

A049860

A-BOARD (1/13)

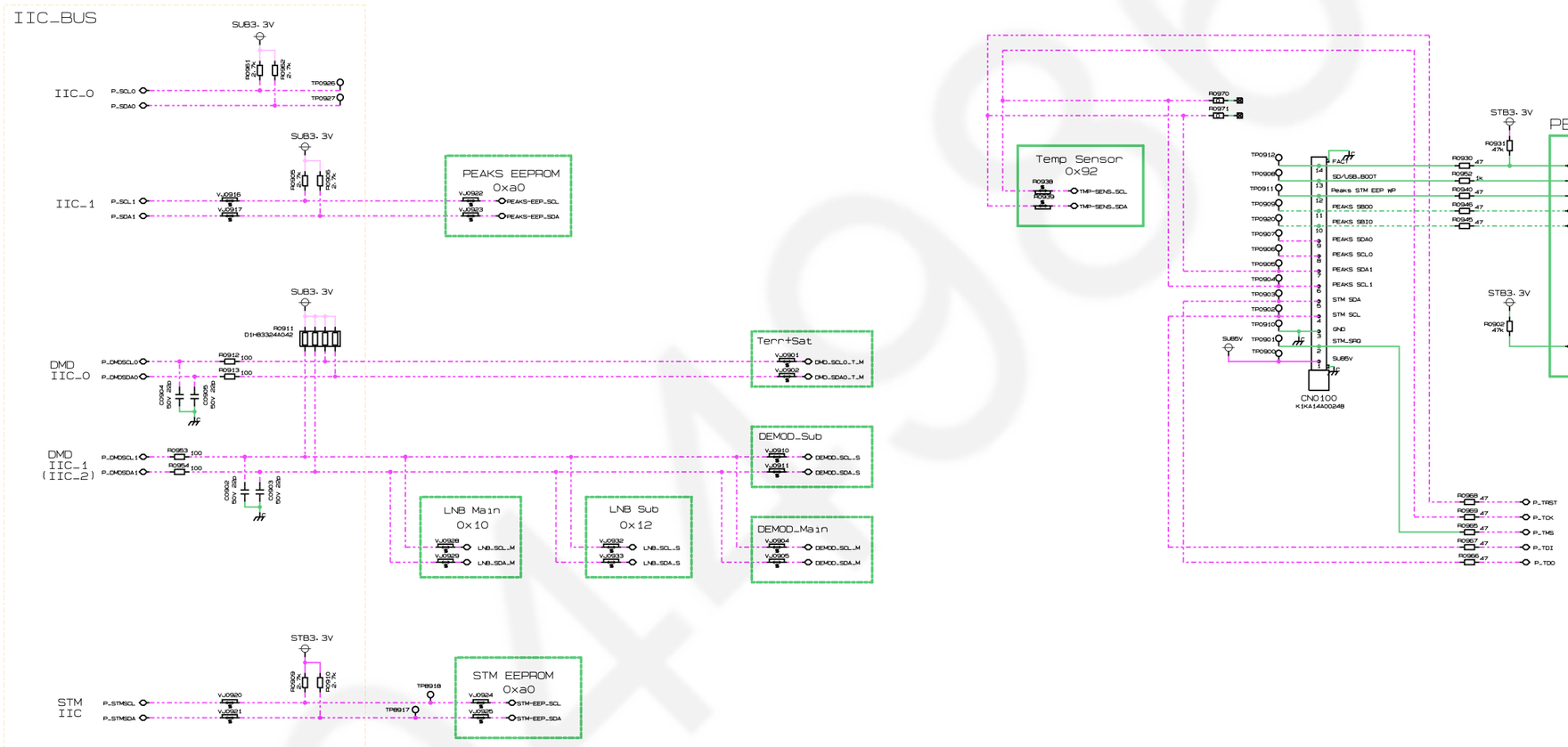
IIC_BUS
IIC_0
P_SCL0
P_SDA0
SUB3.3V
IIC_1
P_SCL1
P_SDA1
PEAKS EEPROM
0xa0
PEAKS-EEP_SCL
PEAKS-EEP_SDA
DMD
IIC_0
P_DMDSCL0
P_DMDSDA0
DMD
IIC_1
(IIC_2)
P_DMDSCL1
P_DMDSDA1
Terr+Sat
DMD_SCL0_T_M
DMD_SDA0_T_M
DEMOD_Sub
DEMOD_SCL_S
DEMOD_SDA_S
LNB Main
0x10
LNB_SCL_M
LNB_SDA_M
LNB Sub
0x12
LNB_SCL_S
LNB_SDA_S
DEMOD_Main
DEMOD_SCL_M
DEMOD_SDA_M
STB3.3V
STM
IIC
P_STMSCL
P_STMSDA
STM EEPROM
0xa0
STM-EEP_SCL
STM-EEP_SDA
Temp Sensor
0x92
TMP-SENS_SCL
TMP-SENS_SDA
PEAKS
P_STMGPIO3
P_ERXW
P_STMADIN2
P_SBDO
P_SBIO
P_STMDDCSDA4
P_TRST
P_TCK
P_TMS
P_TDI
P_TDO
CN0100
K1KA14A00248
SD/USB_BOOT
Peaks STM EEP WP
PEAKS SBDO
PEAKS SBIO
PEAKS SDA0
PEAKS SCL0
PEAKS SDA1
PEAKS SCL1
STM SDA
STM SCL
GND
STM_SRQ
SUB5V

A-BOARD (2/13)

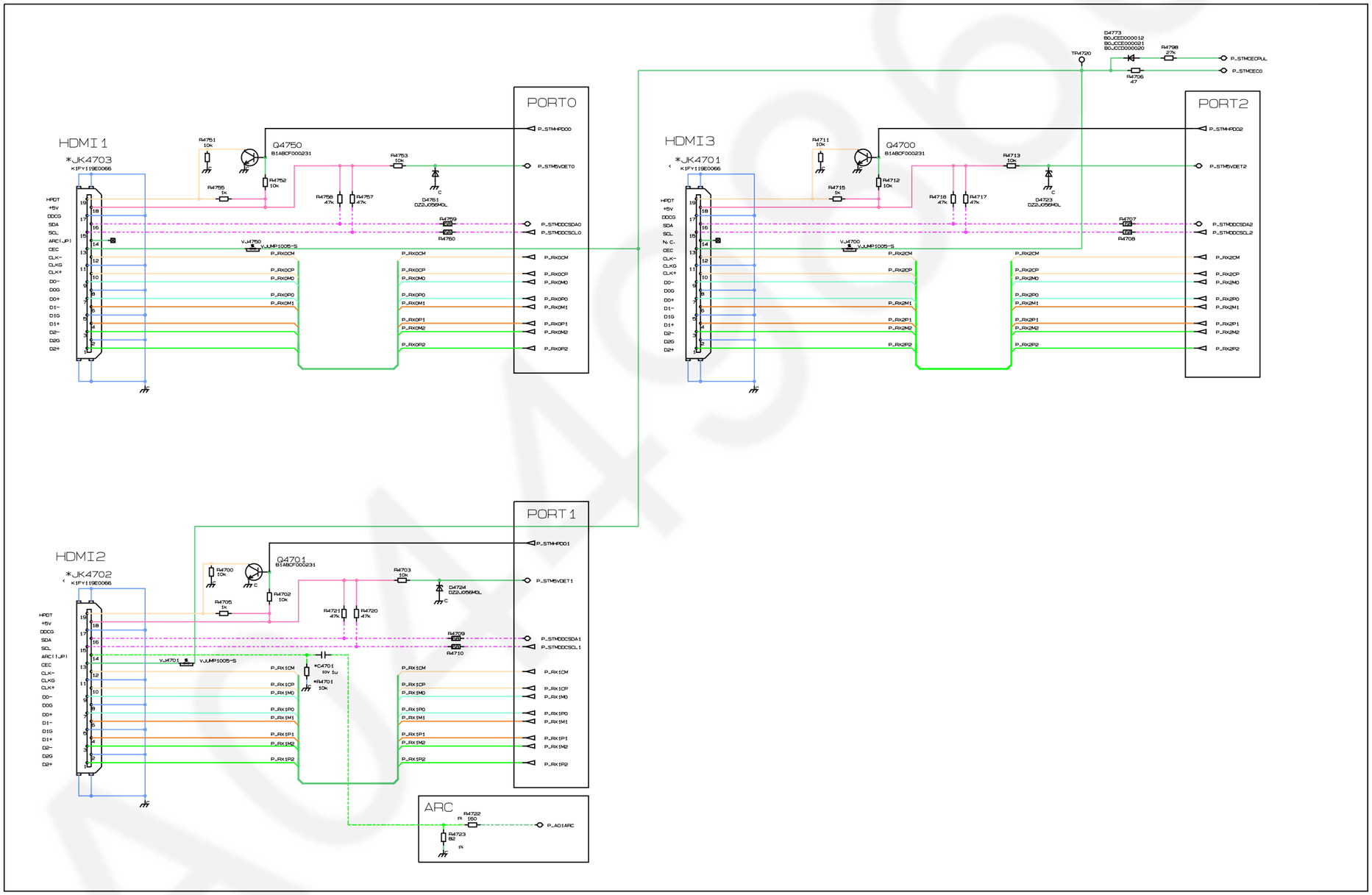
HDMI1
*JK4703
HDMI3
*JK4701
HDMI2
*JK4702
PORT0
PORT2
PORT1
ARC
Q4750
Q4700
Q4701
TP4720
D4773
R4708
R4706
P_STMCECPUL
P_STMCEC0
P_STM-PD00
P_STM5VDET0
P_STMDDCSDA0
P_STMDDCSCL0
P_STM-PD02
P_STM5VDET2
P_STMDDCSDA2
P_STMDDCSCL2
P_STM-PD01
P_STM5VDET1
P_STMDDCSDA1
P_STMDDCSCL1
P_AO1ARC

A-BOARD (3/13)

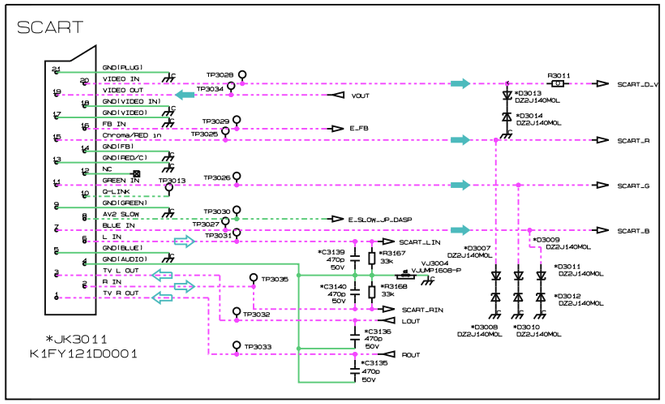
SCART
*JK3011
K1FY121D0001

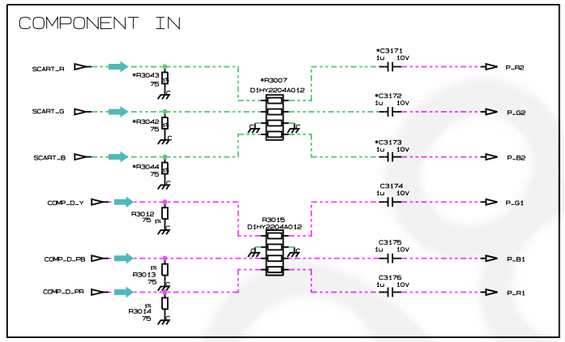
COMPONENT IN

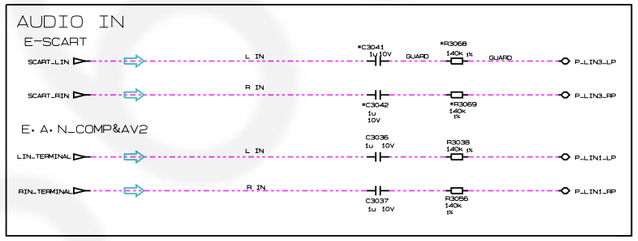
AUDIO IN
E-SCART
E.A.N_COMP&AV2

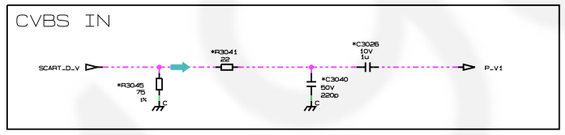
CVBS IN

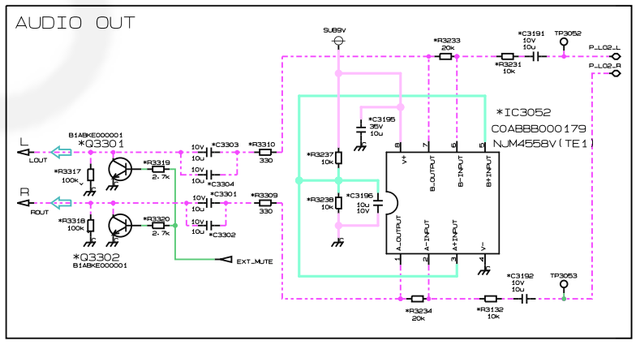
AUDIO OUT
*IC3052
COABBB000179
NJM4558V(TE1)

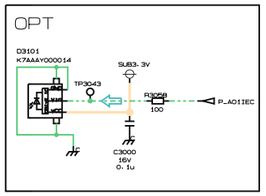
OPT

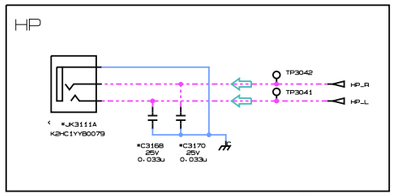
HP

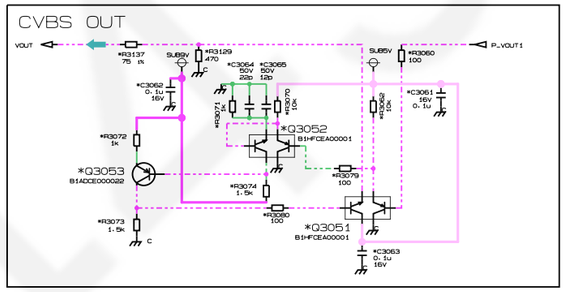
CVBS OUT
*Q3052
*Q3053
*Q3051

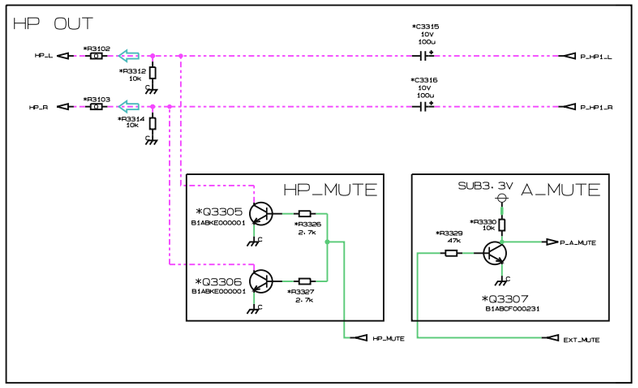
HP OUT
HP_MUTE
A_MUTE
*Q3305
*Q3306
*Q3307

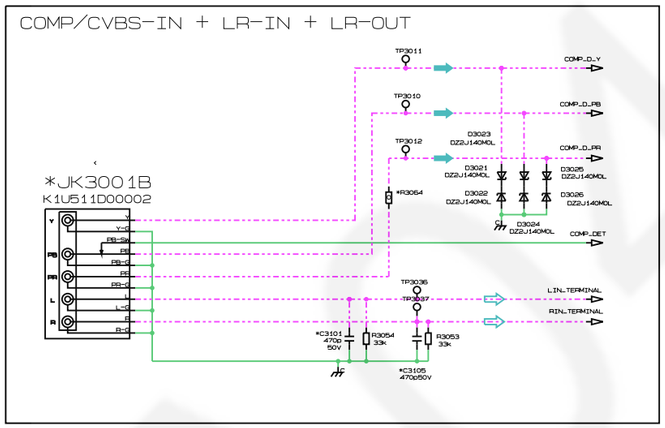
COMP/CVBS-IN + LR-IN + LR-OUT
*JK3001B
K1U511D00002

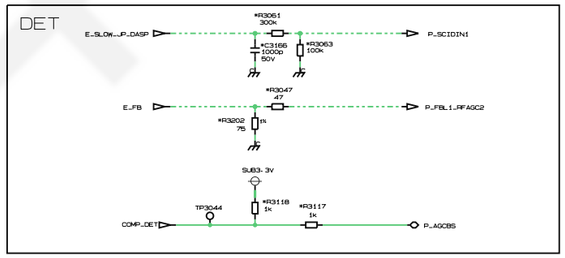
DET

A-BOARD (4/13)

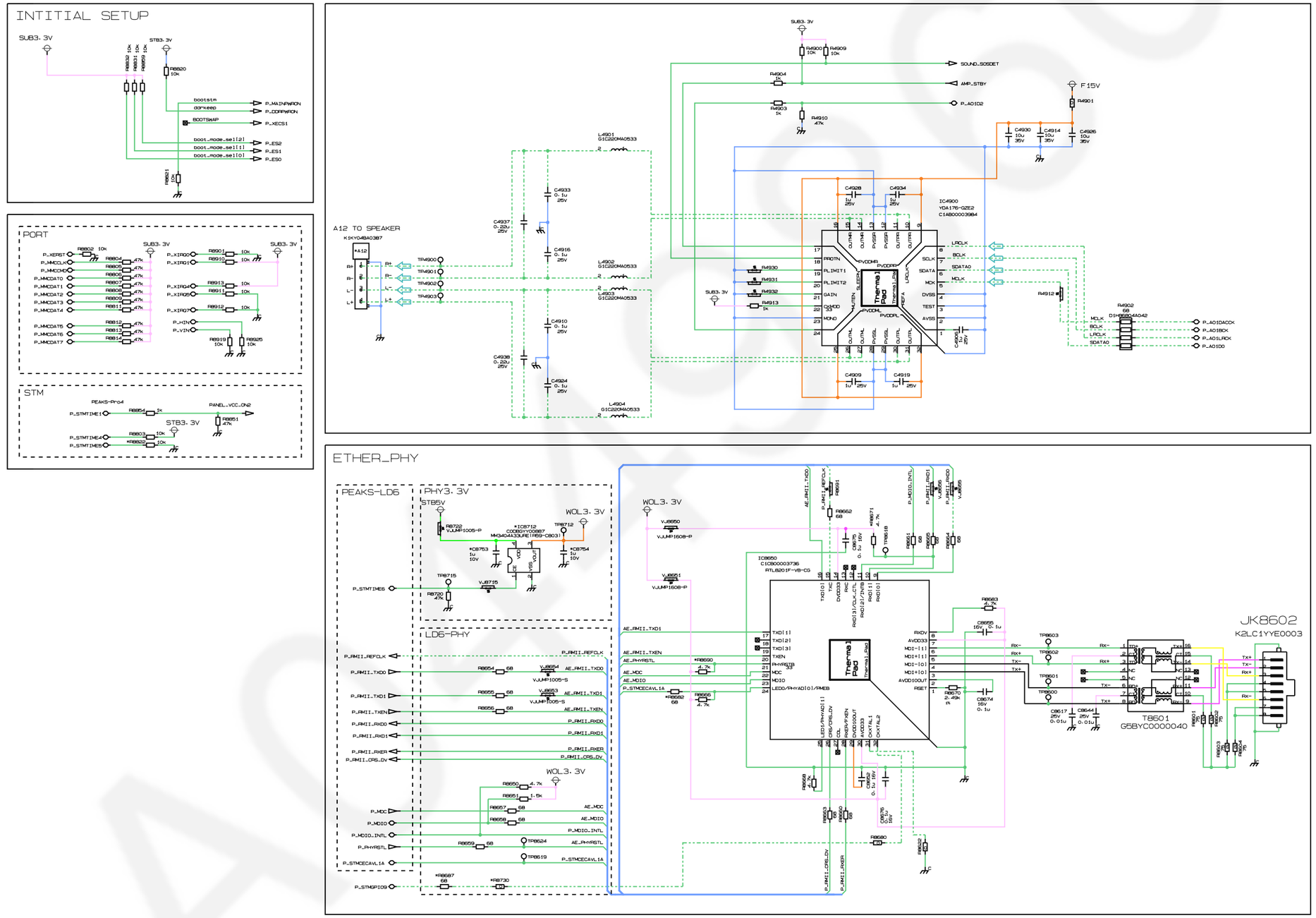
INTITIAL SETUP
PORT
STM
A12 TO SPEAKER
ETHER_PHY
PEAKS-LD6
PHY3.3V
LD6-PHY
JK8602
T8601

A-BOARD (5/13)

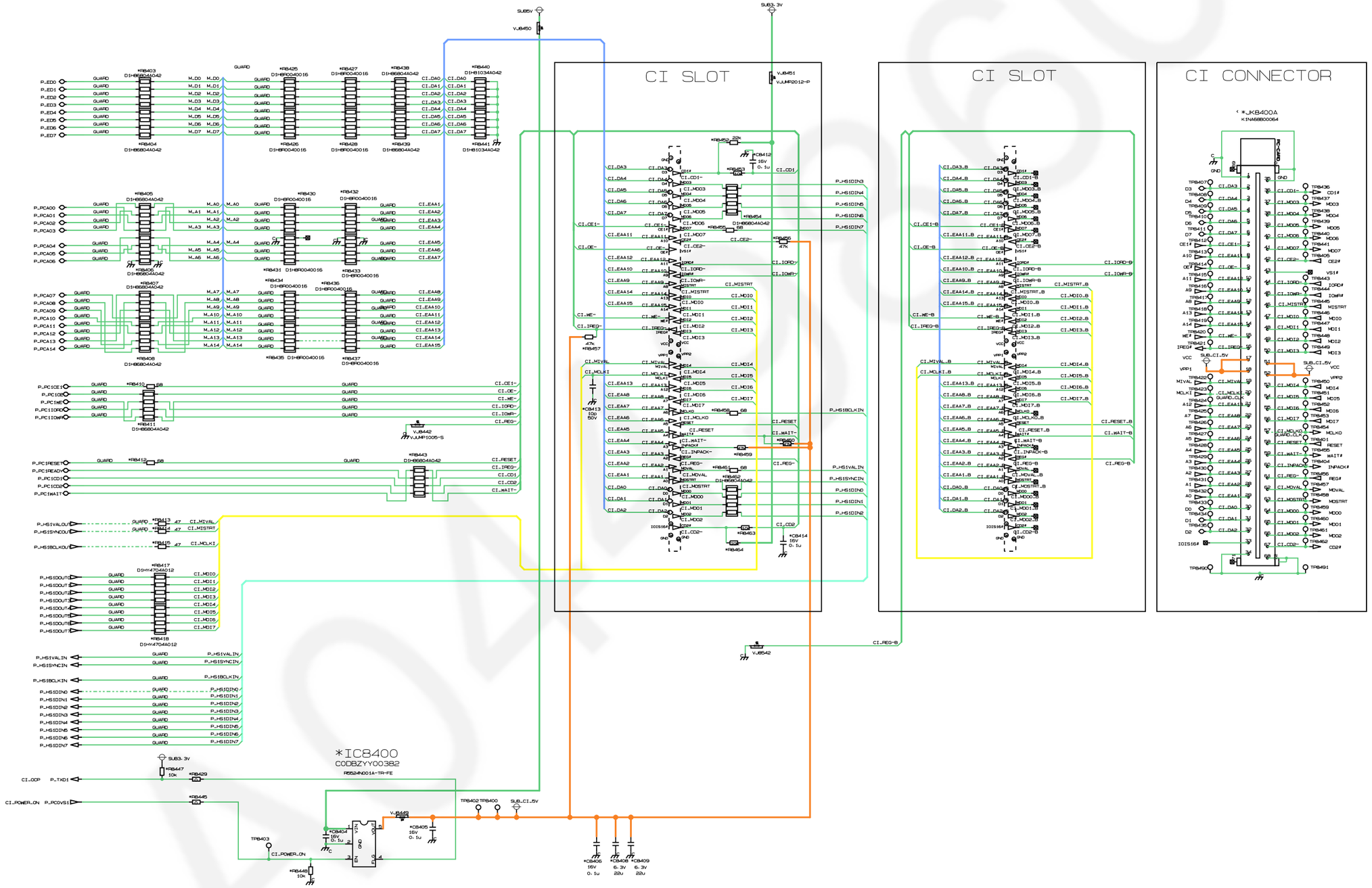

A-BOARD (6/13)

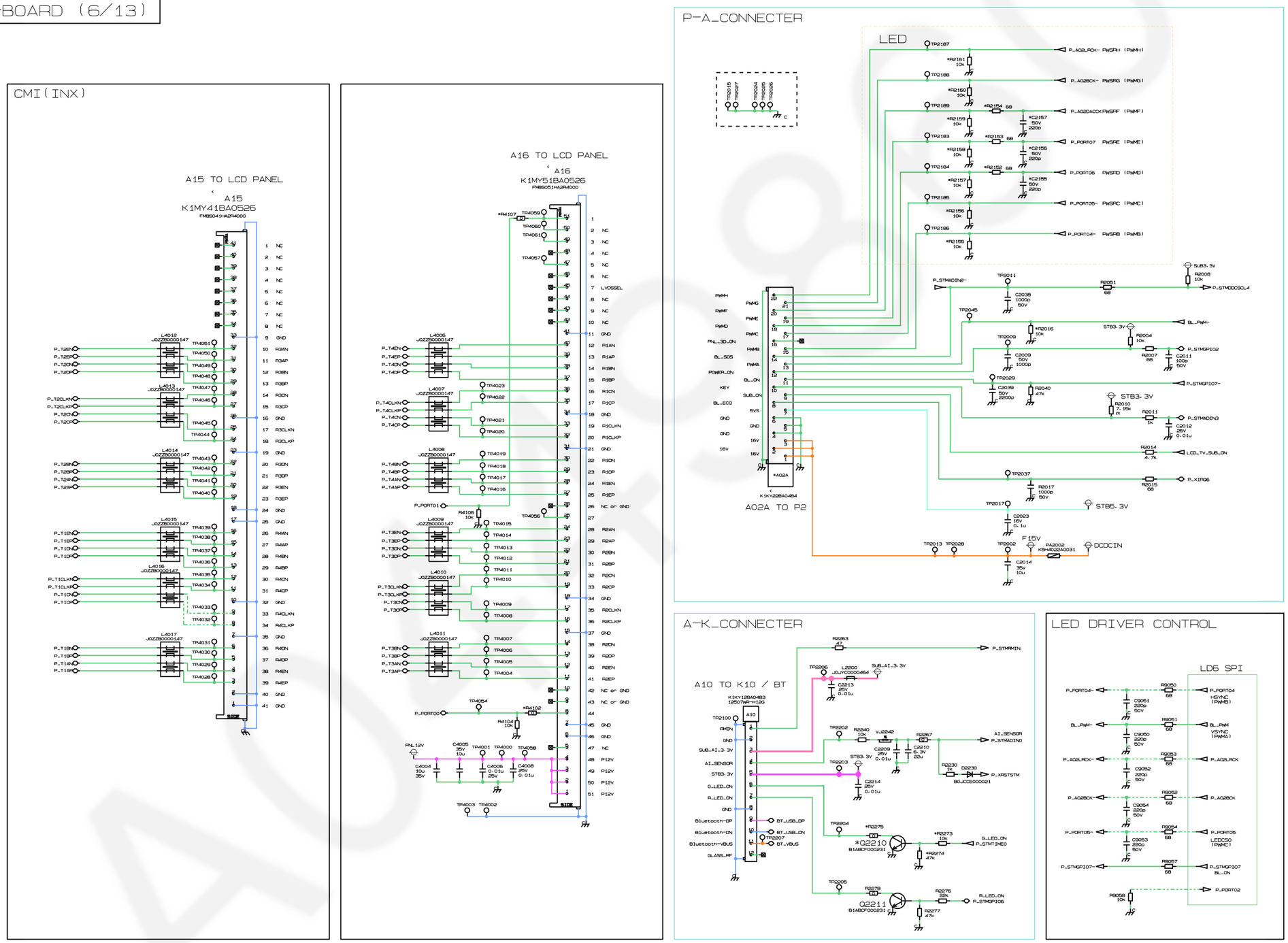
CMI(INX)
A15 TO LCD PANEL
A15
K1MY41BA0526
A16 TO LCD PANEL
A16
K1MY51BA0526
P-A_CONNECTER
LED
A02A TO P2
A-K_CONNECTER
A10 TO K10 / BT
LED DRIVER CONTROL
LD6 SPI

A-BOARD (7/13)

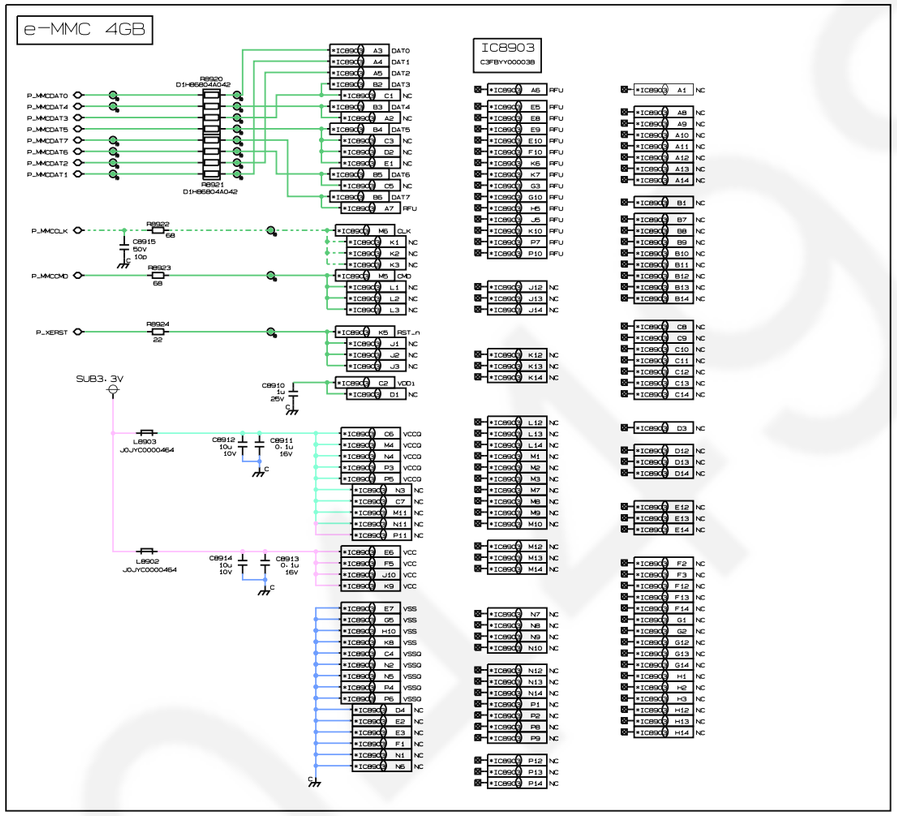
e-MMC 4GB
IC8903
C3FBYY00003B
R8920
D1H86804A042
R8921
D1H86804A042
P_MMCDAT0
P_MMCDAT4
P_MMCDAT3
P_MMCDAT5
P_MMCDAT7
P_MMCDAT6
P_MMCDAT2
P_MMCDAT1
P_MMCCLK
P_MMCCMD
P_XERST
R8922 68
C8915 50V 100
R8923 68
R8924 22
SUB3.3V
C8910 1u 25V
L8903 JOJYC0000464
L8902 JOJYC0000464
C8912 10u 10V
C8911 0.1u 16V
C8914 10u 10V
C8913 0.1u 16V
DAT0
DAT1
DAT2
DAT3
DAT4
DAT5
DAT6
DAT7
CLK
CMD
RST_n
VDD1
VCCQ
VCC
VSS
VSSQ
RFU
NC

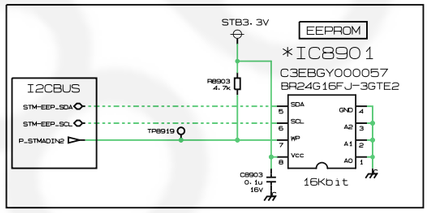
STB3.3V
EEPROM
*IC8901
C3EBGY000057
BR24G16FJ-3GTE2
I2CBUS
STM-EEP_SDA
STM-EEP_SCL
P_STMADIN2
R8903 4.7k
TP8919
C8903 0.1u 16V
SDA
SCL
WP
Vcc
GND
A2
A1
A0
16Kbit

A-BOARD (8/13)

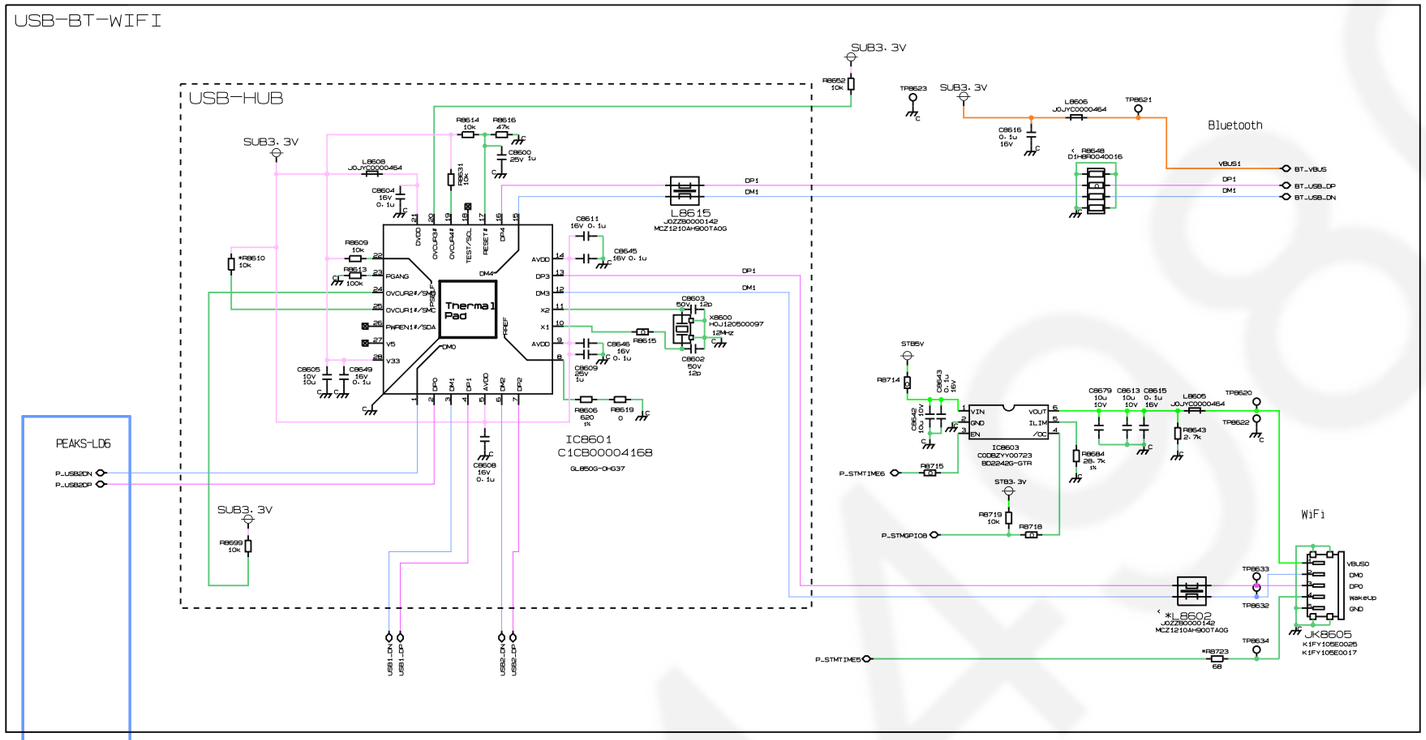
USB-BT-WIFI
USB-HUB
Thermal Pad
IC8501
C1CB00004168
L8515
Bluetooth
PEAKS-LD6
WiFi
JK8505
L8502

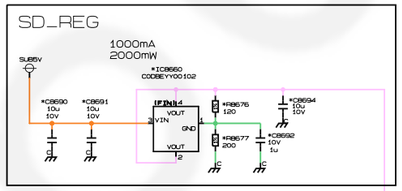
SD_REG
1000mA
2000mW

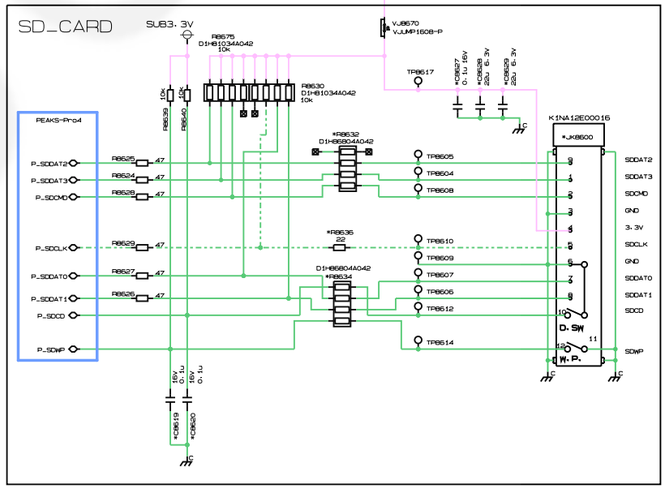
SD_CARD
PEAKS-Prod
D.SW
W.P.

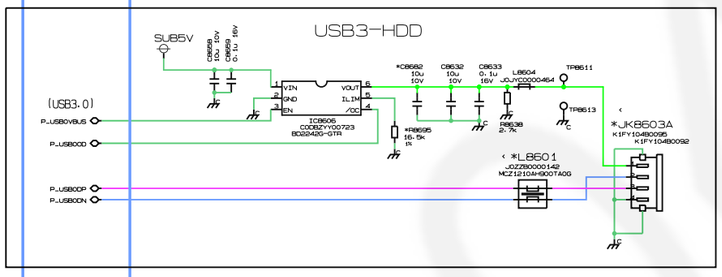
USB3-HDD
(USB3.0)
*JK8603A
*L8601

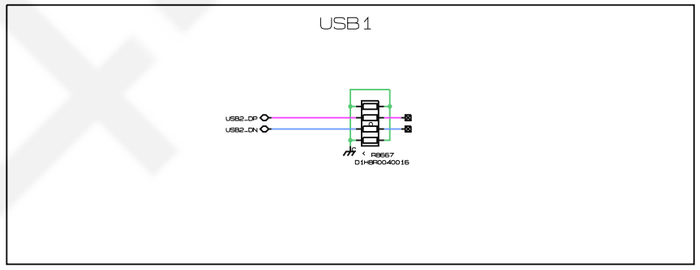
USB1

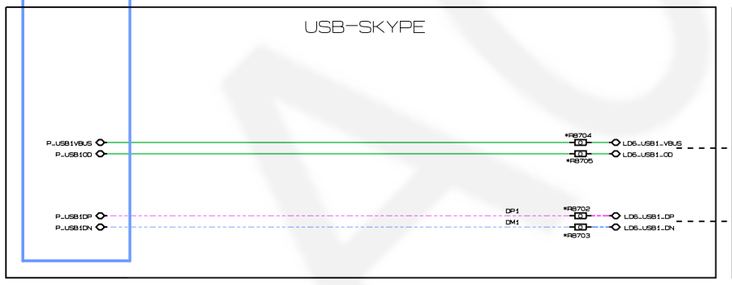
USB-SKYPE

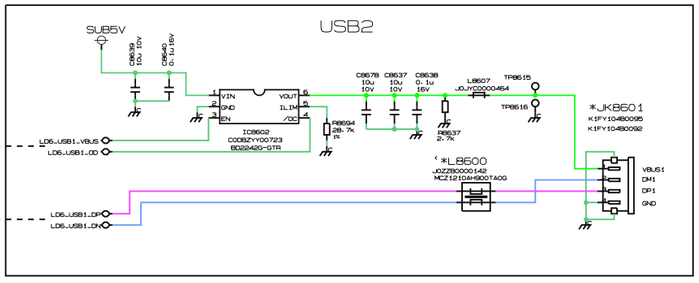
USB2
*JK8601
*L8600

A-BOARD (9/13)

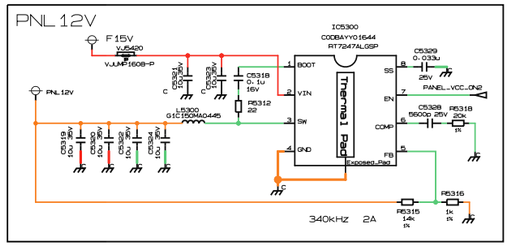
PNL12V
F15V
IC5300
C0DBAYY01644
RT7247ALGSP
Thermal Pad
340kHz 2A

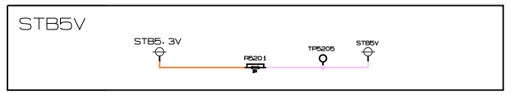
STB5V
STB5.3V
STB5V

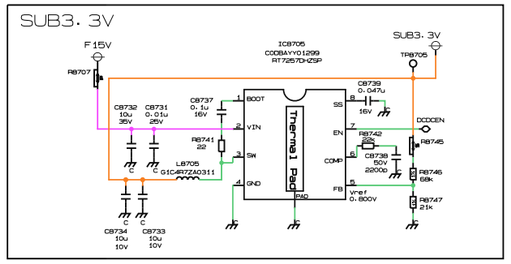
SUB3.3V
F15V
IC8705
C0DBAYY01299
RT7257D-GZSP
Thermal Pad
DCDCEN

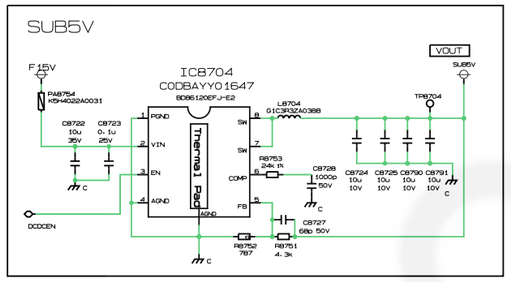
SUB5V
F15V
IC8704
C0DBAYY01647
BD86120EFJ-E2
Thermal Pad
VOUT
SUB5V
DCDCEN

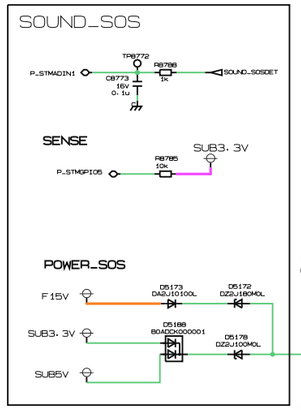
SOUND_SOS
P_STMADIN1
SOUND_SOSDET
SENSE
SUB3.3V
P_STMGPIO5
POWER_SOS
F15V
SUB3.3V
SUB5V

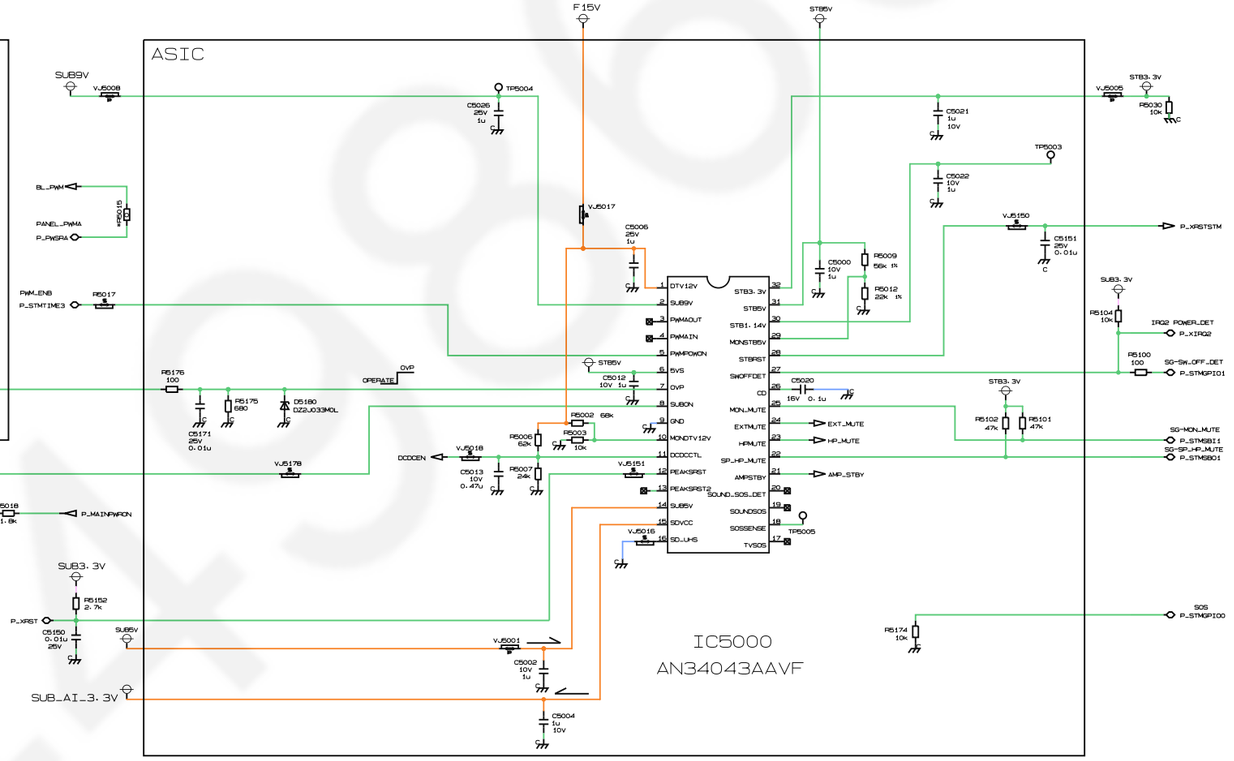
ASIC
F15V
STB5V
SUB9V
STB3.3V
IC5000
AN34043AAVF
SUB_AI_3.3V
P_XRST
P_XRSTSTM
IRQ2 POWER_DET
P_XIRQ2
SG-SW_OFF_DET
P_STMGPIO1
SG-MON_MUTE
P_STMSBI1
SG-SP_HP_MUTE
P_STMSBO1
SOS
P_STMGPIO0
P_STMRONA

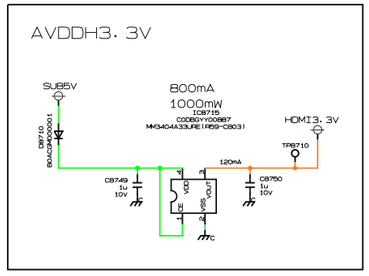
AVDDH3.3V
SUB5V
800mA
1000mW
HDMI3.3V

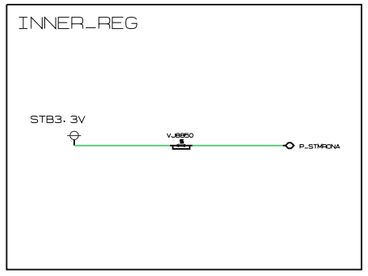
INNER_REG
STB3.3V

# A-BOARD (10/13)

IC8000
MN2WS0280FB

LOCK/LD6

CLK
AXI AN25 IC800 P_AXI
AXO AM25 IC800 P_AXO

STM RESET
XRSTSTM AG17 IC800 P_XRSTSTM

BE RESET
XRST AH17 IC800 P_XRST

JTAG I/F
TCK AG13 IC800 P_TCK
TMS AH13 IC800 P_TMS
TDI AJ13 IC800 P_TDI
TDO AG14 IC800 P_TDO
TRST AH14 IC800 P_TRST

STM REG CTRL
STMRGNA AL27 IC800 P_STMRGNA

REMOTE
STMRMIN AG21 IC800 P_STMRMIN

TIMER
STMTIME0 AJ23 IC800 P_STMTIME0
STMTIME1 AG23 IC800 P_STMTIME1
STMTIME2 AL22 IC800 P_STMTIME2
STMTIME3 AK22 IC800 P_STMTIME3
STMTIME4 AM21 IC800 P_STMTIME4
STMTIME5 AL21 IC800 P_STMTIME5
STMTIME6 AK21 IC800 P_STMTIME6

STM SERIAL
STMSB00 AH22 IC800 P_STMSB00
STMSB10 AJ22 IC800 P_STMSB10
STMSB70 AH23 IC800 P_STMSB70
STMSB01 AH21 IC800 P_STMSB01
STMSB11 AJ21 IC800 P_STMSB11

STM I2C
STMSDA AM22 IC800 P_STMSDA
STMSCL AN22 IC800 P_STMSCL

HDMI I/F
STMCEC0 AM20 IC800 P_STMCEC0
STMCECPUL AN20 IC800 P_STMCECPUL
STMCECAVL1A AM19 IC800 P_STMCECAVL1A
STMHPD00 AJ17 IC800 P_STMHPD00
STM5VDET0 AK17 IC800 P_STM5VDET0
STMDDCSDA0 AL18 IC800 P_STMDDCSDA0
STMDDCSCL0 AK18 IC800 P_STMDDCSCL0
STMHPD01 AJ18 IC800 P_STMHPD01
STM5VDET1 AJ19 IC800 P_STM5VDET1
STMDDCSDA1 AL19 IC800 P_STMDDCSDA1
STMDDCSCL1 AK19 IC800 P_STMDDCSCL1
STMHPD02 AG19 IC800 P_STMHPD02
STM5VDET2 AH19 IC800 P_STM5VDET2
STMDDCSDA2 AJ20 IC800 P_STMDDCSDA2
STMDDCSCL2 AH20 IC800 P_STMDDCSCL2
STMDDCSDA4 AL20 IC800 P_STMDDCSDA4
STMDDCSCL4 AK20 IC800 P_STMDDCSCL4

BE POWER CTRL
MAINPWRON AL23 IC800 P_MAINPWRON

DDR POWER CTRL
DDRPWRON AK23 IC800 P_DDRPWRON

ANALOG INPUT
STMADIN0 AH26 IC800 P_STMADIN0
STMADIN1 AG25 IC800 P_STMADIN1
STMADIN2 AK26 IC800 P_STMADIN2
STMADIN3 AJ26 IC800 P_STMADIN3

STM COMMON I/O & IRQ
STMGPIO0 AL26 IC800 P_STMGPIO0
STMGPIO1 AK25 IC800 P_STMGPIO1
STMGPIO2 AJ25 IC800 P_STMGPIO2
STMGPIO3 AH25 IC800 P_STMGPIO3
STMGPIO4 AM24 IC800 P_STMGPIO4

STM COMMON I/O
STMGPIO5 AL24 IC800 P_STMGPIO5
STMGPIO6 AM24 IC800 P_STMGPIO6
STMGPIO7 AH24 IC800 P_STMGPIO7
STMGPIO8 AJ24 IC800 P_STMGPIO8
STMGPIO9 AM27 IC800 P_STMGPIO9

SYSTEM BUS
ED0 G7 IC800 P_ED0
ED1 E5 IC800 P_ED1
ED2 F6 IC800 P_ED2
ED3 D5 IC800 P_ED3
ED4 E6 IC800 P_ED4
ED5 D6 IC800 P_ED5
ED6 F7 IC800 P_ED6
ED7 E7 IC800 P_ED7
XERWE0 E4 IC800 P_XERWE0
XERWE1 D3 IC800 P_XERWE1
ERXW B5 IC800 P_ERXW
ES0 C5 IC800 P_ES0
ES1 C4 IC800 P_ES1
ES2 D4 IC800 P_ES2
XECS1 F5 IC800 P_XECS1

CI ADDRESS
PCA00 E3 IC800 P_PCA00
PCA01 E2 IC800 P_PCA01
PCA02 F4 IC800 P_PCA02
PCA03 F2 IC800 P_PCA03
PCA04 F1 IC800 P_PCA04
PCA05 F3 IC800 P_PCA05
PCA06 G4 IC800 P_PCA06
PCA07 G3 IC800 P_PCA07
PCA08 J4 IC800 P_PCA08
PCA09 J2 IC800 P_PCA09
PCA10 J3 IC800 P_PCA10
PCA11 J1 IC800 P_PCA11
PCA12 H4 IC800 P_PCA12
PCA13 H2 IC800 P_PCA13
PCA14 H3 IC800 P_PCA14

NAND FLASH I/F
XNFRE F9 IC800 P_XNFRE
XNFWE G8 IC800 P_XNFWE
NFALE F8 IC800 P_NFALE
NFCLE E9 IC800 P_NFCLE
XNFWP C9 IC800 P_XNFWP
XNFCE0 E8 IC800 P_XNFCE0
NANDRYBY0 A6 IC800 P_NANDRYBY0
XNFCE1 F10 IC800 P_XNFCE1
NANDRYBY1 G9 IC800 P_NANDRYBY1
NFD0 D9 IC800 P_NFD0
NFD1 C8 IC800 P_NFD1
NFD2 D8 IC800 P_NFD2
NFD3 C7 IC800 P_NFD3
NFD4 B7 IC800 P_NFD4
NFD5 D7 IC800 P_NFD5
NFD6 B6 IC800 P_NFD6
NFD7 C6 IC800 P_NFD7

eMMC CARD I/F
XERST G12 IC800 P_XERST
MMCCLK G11 IC800 P_MMCCLK
MMCCMD F11 IC800 P_MMCCMD
MMCDAT0 C10 IC800 P_MMCDAT0
MMCDAT1 B10 IC800 P_MMCDAT1
MMCDAT2 D10 IC800 P_MMCDAT2
MMCDAT3 E10 IC800 P_MMCDAT3
MMCDAT4 D11 IC800 P_MMCDAT4
MMCDAT5 D10 IC800 P_MMCDAT5
MMCDAT6 B9 IC800 P_MMCDAT6
MMCDAT7 A9 IC800 P_MMCDAT7

SD CARD I/F
SDCLK AH5 IC800 P_SDCLK
SDCMD AG5 IC800 P_SDCMD
SDDAT0 AH4 IC800 P_SDDAT0
SDDAT1 AH5 IC800 P_SDDAT1
SDDAT2 AF6 IC800 P_SDDAT2
SDDAT3 AF7 IC800 P_SDDAT3
SDCD AJ5 IC800 P_SDCD
SDWP AG5 IC800 P_SDWP

USB POWER CTRL
USB0VBUS AA3 IC800 P_USB0VBUS
USB0OD AB1 IC800 P_USB0OD
USB1VBUS AB2 IC800 P_USB1VBUS
USB1OD AA2 IC800 P_USB1OD
USB2VBUS V3 IC800 P_USB2VBUS
USB2OD V4 IC800 P_USB2OD

CI #0 I/F
PCCREADY H5 IC800 P_PCCREADY
PCCCD1 L6 IC800 P_PCCCD1
PCCCD2 G6 IC800 P_PCCCD2
PCCWAIT H7 IC800 P_PCCWAIT
PCCVS1 J5 IC800 P_PCCVS1
PCCRESET H5 IC800 P_PCCRESET
PCCCE1 L7 IC800 P_PCCCE1
PCCCE2 K6 IC800 P_PCCCE2
PCCREG G5 IC800 P_PCCREG
PCCWE J7 IC800 P_PCCWE
PCCOE K5 IC800 P_PCCOE
PCCIOWR J6 IC800 P_PCCIOWR
PCCIORD K7 IC800 P_PCCIORD
PCCCDE K4 IC800 P_PCCCDE
PCCBUFCTL2 K3 IC800 P_PCCBUFCTL2

TS PARALLEL #0 INPUT
HS0BCLKIN P4 IC800 P_HS0BCLKIN
HS0SYNCIN P1 IC800 P_HS0SYNCIN
HSOVALIN P3 IC800 P_HSOVALIN
HSODIN0 P2 IC800 P_HSODIN0
HSODIN1 N3 IC800 P_HSODIN1
HSODIN2 N2 IC800 P_HSODIN2
HSODIN3 P5 IC800 P_HSODIN3
HSODIN4 P6 IC800 P_HSODIN4
HSODIN5 N5 IC800 P_HSODIN5
HSODIN6 N4 IC800 P_HSODIN6
HSODIN7 P7 IC800 P_HSODIN7

TS PARALLEL #0 OUTPUT
HS0BCLKOUT M6 IC800 P_HS0BCLKOUT
HS0SYNCOUT M4 IC800 P_HS0SYNCOUT
HSOVALOUT N7 IC800 P_HSOVALOUT
HSODOUT0 M2 IC800 P_HSODOUT0
HSODOUT1 M1 IC800 P_HSODOUT1
HSODOUT2 L4 IC800 P_HSODOUT2
HSODOUT3 N6 IC800 P_HSODOUT3
HSODOUT4 M7 IC800 P_HSODOUT4
HSODOUT5 M3 IC800 P_HSODOUT5
HSODOUT6 M5 IC800 P_HSODOUT6
HSODOUT7 L5 IC800 P_HSODOUT7

CI #1 I/F
PC1READY U5 IC800 P_PC1READY
PC1CD1 R7 IC800 P_PC1CD1
PC1CD2 W6 IC800 P_PC1CD2
PC1WAIT V7 IC800 P_PC1WAIT
PC1VS1 U4 IC800 P_PC1VS1
PC1RESET V6 IC800 P_PC1RESET
PC1CE1 U7 IC800 P_PC1CE1
PC1CE2 T7 IC800 P_PC1CE2
PC1REG W7 IC800 P_PC1REG
PC1WE V5 IC800 P_PC1WE
PC1OE T6 IC800 P_PC1OE
PC1IOWR U6 IC800 P_PC1IOWR
PC1IORD T5 IC800 P_PC1IORD
PC1CDE R6 IC800 P_PC1CDE
PC1BUFCTL2 R6 IC800 P_PC1BUFCTL2

TS PARALLEL #1 INPUT
HS1BCLKIN AD5 IC800 P_HS1BCLKIN
HS1SYNCIN AF5 IC800 P_HS1SYNCIN
HS1VALIN AD6 IC800 P_HS1VALIN
HS1DIN0 AE5 IC800 P_HS1DIN0
HS1DIN1 AD7 IC800 P_HS1DIN1
HS1DIN2 AE7 IC800 P_HS1DIN2
HS1DIN3 AD6 IC800 P_HS1DIN3
HS1DIN4 AC7 IC800 P_HS1DIN4
HS1DIN5 AB7 IC800 P_HS1DIN5
HS1DIN6 AC5 IC800 P_HS1DIN6
HS1DIN7 AE6 IC800 P_HS1DIN7

TS PARALLEL #1 OUTPUT
HS1BCLKOUT AA4 IC800 P_HS1BCLKOUT
HS1SYNCOUT Y4 IC800 P_HS1SYNCOUT
HS1VALOUT AA6 IC800 P_HS1VALOUT
HS1DOUT0 Y5 IC800 P_HS1DOUT0
HS1DOUT1 W5 IC800 P_HS1DOUT1
HS1DOUT2 Y7 IC800 P_HS1DOUT2
HS1DOUT3 Y6 IC800 P_HS1DOUT3
HS1DOUT4 AA5 IC800 P_HS1DOUT4
HS1DOUT5 AB6 IC800 P_HS1DOUT5
HS1DOUT6 AA7 IC800 P_HS1DOUT6
HS1DOUT7 AB5 IC800 P_HS1DOUT7

TS PARALLEL #2 INPUT
HS2BCLKIN AM8 IC800 P_HS2BCLKIN
HS2SYNCIN AK8 IC800 P_HS2SYNCIN
HS2VALIN AL8 IC800 P_HS2VALIN
HS2DIN0 AL7 IC800 P_HS2DIN0
HS2DIN1 AL6 IC800 P_HS2DIN1
HS2DIN2 AM6 IC800 P_HS2DIN2
HS2DIN3 AH10 IC800 P_HS2DIN3
HS2DIN4 AJ9 IC800 P_HS2DIN4
HS2DIN5 AJ10 IC800 P_HS2DIN5
HS2DIN6 AG10 IC800 P_HS2DIN6
HS2DIN7 AK9 IC800 P_HS2DIN7

TS PARALLEL #3 INPUT
HS3BCLKIN AG7 IC800 P_HS3BCLKIN
HS3SYNCIN AG9 IC800 P_HS3SYNCIN
HS3VALIN AG8 IC800 P_HS3VALIN
HS3DIN0 AH8 IC800 P_HS3DIN0
HS3DIN1 AJ8 IC800 P_HS3DIN1
HS3DIN2 AH9 IC800 P_HS3DIN2
HS3DIN3 AK6 IC800 P_HS3DIN3
HS3DIN4 AK7 IC800 P_HS3DIN4
HS3DIN5 AJ6 IC800 P_HS3DIN5
HS3DIN6 AH7 IC800 P_HS3DIN6
HS3DIN7 AJ7 IC800 P_HS3DIN7

TUNER CTRL
AGCI AJ11 IC800 P_AGCI
AGCBS AJ12 IC800 P_AGCBS

AUDIO OUTPUT
A_MUTE AG28 IC800 P_A_MUTE
AO1IEC AJ31 IC800 P_AO1IEC
AO1ARC AN5 IC800 P_AO1ARC
AO1DACK AK29 IC800 P_AO1DACK
AO1BCK AG29 IC800 P_AO1BCK
AO1LRCK AH30 IC800 P_AO1LRCK
AO1D0 AH28 IC800 P_AO1D0
AO1D1 AJ29 IC800 P_AO1D1
AO1D2 AF27 IC800 P_AO1D2
AO1D3 AH29 IC800 P_AO1D3
AO2DACK AK31 IC800 P_AO2DACK
AO2BCK AK30 IC800 P_AO2BCK
AO2LRCK AL30 IC800 P_AO2LRCK
AO2D0 AJ30 IC800 P_AO2D0

BE I2C
SDA0 AD30 IC800 P_SDA0
SCL0 AD31 IC800 P_SCL0
SDA1 AC30 IC800 P_SDA1
SCL1 AC31 IC800 P_SCL1

DEMOD I2C
DMDSDA0 AG12 IC800 P_DMDSDA0
DMDSCL0 AH12 IC800 P_DMDSCL0
DMDSDA1 AG11 IC800 P_DMDSDA1
DMDSCL1 AH11 IC800 P_DMDSCL1

BE SERIAL
SB00 E11 IC800 P_SB00
SB10 F12 IC800 P_SB10

HIGH SPEED SERIAL
TXD1 AH33 IC800 P_TXD1
RXD1 AJ32 IC800 P_RXD1

VIDEO (PC) INPUT
HIN AK14 IC800 P_HIN
VIN AK13 IC800 P_VIN

PANEL PWM
PWSRA AE33 IC800 P_PWSRA

BE COMMON PORT & IRQ
XIRQ0 C11 IC800 P_XIRQ0
XIRQ1 F24 IC800 P_XIRQ1
XIRQ2 AF29 IC800 P_XIRQ2
XIRQ3 AH31 IC800 P_XIRQ3
XIRQ4 AH32 IC800 P_XIRQ4
XIRQ5 AE27 IC800 P_XIRQ5
XIRQ6 AG30 IC800 P_XIRQ6
XIRQ7 AG31 IC800 P_XIRQ7
XIRQ8 AF30 IC800 P_XIRQ8

BE COMMON PORT
PORT00 AE31 IC800 P_PORT00
PORT01 AF28 IC800 P_PORT01
PORT02 AF32 IC800 P_PORT02
PORT03 AE28 IC800 P_PORT03
PORT04 AE32 IC800 P_PORT04
PORT05 AF31 IC800 P_PORT05
PORT06 AE30 IC800 P_PORT06
PORT07 AE29 IC800 P_PORT07

LAN PHY I/F
RMII_RXD0 AK28 IC800 P_RMII_RXD0
RMII_RXD1 AJ28 IC800 P_RMII_RXD1
RMII_CRS_DV AM28 IC800 P_RMII_CRS_DV
RMII_RXER AL29 IC800 P_RMII_RXER
RMII_REFCLK AM29 IC800 P_RMII_REFCLK
RMII_TXD0 AH27 IC800 P_RMII_TXD0
RMII_TXD1 AJ27 IC800 P_RMII_TXD1
RMII_TXEN AG27 IC800 P_RMII_TXEN
MDC AK27 IC800 P_MDC
MDIO AG26 IC800 P_MDIO
MDIO_INTL AL28 IC800 P_MDIO_INTL
PHYRSTL AN28 IC800 P_PHYRSTL

LOCK/LD6

DCDC FEEDBACK
AFB L2 IC800 P_AFB

DDR3 POWER CTRL
LPCTL D31 IC800 P_LPCTL

LOCK/LD6

DDR3 CH0 I/F
MK0CK B20 IC800 P_MK0CK
MK0CK A20 IC800 P_MK0CK
MD0D0 B23 IC800 P_MD0D0
MD0D1 C23 IC800 P_MD0D1
MD0D2 C24 IC800 P_MD0D2
MD0D3 D24 IC800 P_MD0D3
MD0D4 C29 IC800 P_MD0D4
MD0D5 B29 IC800 P_MD0D5
MD0D6 D28 IC800 P_MD0D6
MD0D7 C28 IC800 P_MD0D7
MD0D8 A28 IC800 P_MD0D8
MD0D9 C28 IC800 P_MD0D9
MD0D10 C26 IC800 P_MD0D10
MD0D11 C21 IC800 P_MD0D11
MD0D12 B21 IC800 P_MD0D12
MD0D13 B26 IC800 P_MD0D13
MD0D14 A22 IC800 P_MD0D14
MD0D15 B22 IC800 P_MD0D15
P_MD0D[0:15]
MD0D16 C16 IC800 P_MD0D16
MD0D17 A17 IC800 P_MD0D17
MD0D18 D18 IC800 P_MD0D18
MD0D19 D16 IC800 P_MD0D19
MD0D20 C13 IC800 P_MD0D20
MD0D21 C12 IC800 P_MD0D21
MD0D22 B12 IC800 P_MD0D22
MD0D23 A12 IC800 P_MD0D23
MD0D24 C14 IC800 P_MD0D24
MD0D25 B14 IC800 P_MD0D25
MD0D26 A14 IC800 P_MD0D26
MD0D27 D15 IC800 P_MD0D27
MD0D28 C19 IC800 P_MD0D28
MD0D29 B18 IC800 P_MD0D29
MD0D30 C18 IC800 P_MD0D30
MD0D31 D19 IC800 P_MD0D31
P_MD0D[16:31]
MD0DQS0 B25 IC800 P_MD0DQS0
MD0DQS1 D27 IC800 P_MD0DQS1
MD0DQS2 B17 IC800 P_MD0DQS2
MD0DQS3 C15 IC800 P_MD0DQS3
MD0DQS0 A25 IC800 P_MD0XDQS0
MD0DQS1 C27 IC800 P_MD0XDQS1
MD0DQS2 C17 IC800 P_MD0XDQS2
MD0DQS3 B15 IC800 P_MD0XDQS3
MD0CM0 C30 IC800 P_MD0CM0
MD0CM1 C22 IC800 P_MD0CM1
MD0CM2 B13 IC800 P_MD0CM2
MD0CM3 D20 IC800 P_MD0CM3
MD0A0 F17 IC800 P_MD0A0
MD0A1 F24 IC800 P_MD0A1
MD0A2 F25 IC800 P_MD0A2
MD0A3 F23 IC800 P_MD0A3
MD0A4 E15 IC800 P_MD0A4
MD0A5 E25 IC800 P_MD0A5
MD0A6 E14 IC800 P_MD0A6
MD0A7 F26 IC800 P_MD0A7
MD0A8 E26 IC800 P_MD0A8
MD0A9 E16 IC800 P_MD0A9
MD0A10 E22 IC800 P_MD0A10
MD0A11 F16 IC800 P_MD0A11
MD0A12 F15 IC800 P_MD0A12
MD0A13 D25 IC800 P_MD0A13
MD0A14 E13 IC800 P_MD0A14
MD0A15 E24 IC800 P_MD0A15
MD0BA0 D23 IC800 P_MD0BA0
MD0BA1 F14 IC800 P_MD0BA1
MD0BA2 E23 IC800 P_MD0BA2
MD0XCS0 F18 IC800 P_MD0XCS0
MD0XCS1 E17 IC800 P_MD0XCS1
MD0XRAS E21 IC800 P_MD0XRAS
MD0XCAS F19 IC800 P_MD0XCAS
MD0XWE F22 IC800 P_MD0XWE
MD0CKE0 E20 IC800 P_MD0CKE0
MD0CKE1 E18 IC800 P_MD0CKE1
MD0ODT0 F21 IC800 P_MD0ODT0
MD0ODT1 F20 IC800 P_MD0ODT1
MD0XRESET D13 IC800 P_MD0XRESET
MD0ZQ E27 IC800 P_MD0ZQ

DDR3 CH0 REF
MD0VREF0 G21 IC800 P_MD0VREF
MD0VREF1 G15 IC800 P_MD0VREF
MD0VREF2 G19 IC800 P_MD0VREF

LVDS I/F
T1AP P33 IC800 P_T1AP
T1AN P32 IC800 P_T1AN
T1BP P31 IC800 P_T1BP
T1BN P30 IC800 P_T1BN
T1CP R31 IC800 P_T1CP
T1CN T30 IC800 P_T1CN
T1DP U33 IC800 P_T1DP
T1DN U32 IC800 P_T1DN
T1EP U31 IC800 P_T1EP
T1EN V32 IC800 P_T1EN
T1CLKP T31 IC800 P_T1CLKP
T1CLKN U30 IC800 P_T1CLKN
T2AP T28 IC800 P_T2AP
T2AN U29 IC800 P_T2AN
T2BP V28 IC800 P_T2BP
T2BN U29 IC800 P_T2BN
T2CP V30 IC800 P_T2CP
T2CN V29 IC800 P_T2CN
T2DP V29 IC800 P_T2DP
T2DN V28 IC800 P_T2DN
T2EP V30 IC800 P_T2EP
T2EN W29 IC800 P_T2EN
T2CLKP W27 IC800 P_T2CLKP
T2CLKN W28 IC800 P_T2CLKN

DDR3 CH1 I/F
MK1CK J33 IC800 P_MK1CK
MK1CK J32 IC800 P_MK1CK
MD1D0 G30 IC800 P_MD1D0
MD1D1 H30 IC800 P_MD1D1
MD1D2 N31 IC800 P_MD1D2
MD1D3 N32 IC800 P_MD1D3
MD1D4 M33 IC800 P_MD1D4
MD1D5 M32 IC800 P_MD1D5
MD1D6 G31 IC800 P_MD1D6
MD1D7 G32 IC800 P_MD1D7
MD1D8 M30 IC800 P_MD1D8
MD1D9 K31 IC800 P_MD1D9
MD1D10 F31 IC800 P_MD1D10
MD1D11 M31 IC800 P_MD1D11
MD1D12 F32 IC800 P_MD1D12
MD1D13 K32 IC800 P_MD1D13
MD1D14 E31 IC800 P_MD1D14
MD1D15 E32 IC800 P_MD1D15
P_MD1D[0:15]
MD1DQS0 J30 IC800 P_MD1DQS0
MD1DQS1 L31 IC800 P_MD1DQS1
MD1XDQS0 H31 IC800 P_MD1XDQS0
MD1XDQS1 L30 IC800 P_MD1XDQS1
MD1CM0 P30 IC800 P_MD1CM0
MD1CM1 F33 IC800 P_MD1CM1
MD1A0 H28 IC800 P_MD1A0
MD1A1 K28 IC800 P_MD1A1
MD1A2 G28 IC800 P_MD1A2
MD1A3 G26 IC800 P_MD1A3
MD1A4 K29 IC800 P_MD1A4
MD1A5 G29 IC800 P_MD1A5
MD1A6 J28 IC800 P_MD1A6
MD1A7 F27 IC800 P_MD1A7
MD1A8 J29 IC800 P_MD1A8
MD1A9 G27 IC800 P_MD1A9
MD1A10 M28 IC800 P_MD1A10
MD1A11 K30 IC800 P_MD1A11
MD1A12 L28 IC800 P_MD1A12
MD1A13 F29 IC800 P_MD1A13
MD1A14 H29 IC800 P_MD1A14
MD1A15 N29 IC800 P_MD1A15
MD1BA0 N28 IC800 P_MD1BA0
MD1BA1 M29 IC800 P_MD1BA1
MD1BA2 N30 IC800 P_MD1BA2
MD1XCS0 P28 IC800 P_MD1XCS0
MD1XRAS R29 IC800 P_MD1XRAS
MD1XCAS P29 IC800 P_MD1XCAS
MD1XWE T29 IC800 P_MD1XWE
MD1CKE0 R30 IC800 P_MD1CKE0
MD1ODT0 R27 IC800 P_MD1ODT0
MD1XRESET P28 IC800 P_MD1XRESET
MD1ZQ E30 IC800 P_MD1ZQ

DDR3 CH1 REF
MD1VREF0 J27 IC800 P_MD1VREF
MD1VREF2 L27 IC800 P_MD1VREF

LVDS I/F
T3AP V31 IC800 P_T3AP
T3AN W30 IC800 P_T3AN
T3BP W31 IC800 P_T3BP
T3BN V31 IC800 P_T3BN
T3CP Y33 IC800 P_T3CP
T3CN Y32 IC800 P_T3CN
T3DP AB33 IC800 P_T3DP
T3DN AB33 IC800 P_T3DN
T3EP AB31 IC800 P_T3EP
T3EN AC32 IC800 P_T3EN
T3CLKP AA31 IC800 P_T3CLKP
T3CLKN AA32 IC800 P_T3CLKN
T4AP AA30 IC800 P_T4AP
T4AN AA29 IC800 P_T4AN
T4BP AA28 IC800 P_T4BP
T4BN AA27 IC800 P_T4BN
T4CP AB27 IC800 P_T4CP
T4CN AC27 IC800 P_T4CN
T4DP AC29 IC800 P_T4DP
T4DN AC28 IC800 P_T4DN
T4EP AD28 IC800 P_T4EP
T4EN AD29 IC800 P_T4EN
T4CLKP AB30 IC800 P_T4CLKP
T4CLKN AB29 IC800 P_T4CLKN

TUNER I/F
FEAINP AN17 IC800 P_FEAINP
FEAINN AM17 IC800 P_FEAINN
BSIG_I AL16 IC800 P_BSIG_I
BSIG_Q AM16 IC800 P_BSIG_Q

LOCK/LD6

USB I/F
USB0DP U1 IC800 P_USB0DP
USB0DN U2 IC800 P_USB0DN
USB0TXP V2 IC800 P_USB0TXP
USB0TXN V1 IC800 P_USB0TXN
USB0RXP W2 IC800 P_USB0RXP
USB0RXN W3 IC800 P_USB0RXN
USB1DP T3 IC800 P_USB1DP
USB1DN T2 IC800 P_USB1DN
USB2DP R3 IC800 P_USB2DP
USB2DN R4 IC800 P_USB2DN

HDMI INPUT
RX0CP AL5 IC800 P_RX0CP
RX0CM AM5 IC800 P_RX0CM
RX0P0 AK4 IC800 P_RX0P0
RX0M0 AL4 IC800 P_RX0M0
RX0P1 AJ3 IC800 P_RX0P1
RX0M1 AK3 IC800 P_RX0M1
RX0P2 AH1 IC800 P_RX0P2
RX0M2 AJ2 IC800 P_RX0M2
RX1CP AH3 IC800 P_RX1CP
RX1CM AH2 IC800 P_RX1CM
RX1P0 AG3 IC800 P_RX1P0
RX1M0 AG2 IC800 P_RX1M0
RX1P1 AF3 IC800 P_RX1P1
RX1M1 AF4 IC800 P_RX1M1
RX1P2 AE3 IC800 P_RX1P2
RX1M2 AE4 IC800 P_RX1M2
RX2CP AE2 IC800 P_RX2CP
RX2CM AE1 IC800 P_RX2CM
RX2P0 AD3 IC800 P_RX2P0
RX2M0 AD2 IC800 P_RX2M0
RX2P1 AC3 IC800 P_RX2P1
RX2M1 AC4 IC800 P_RX2M1
RX2P2 AB3 IC800 P_RX2P2
RX2M2 AB4 IC800 P_RX2M2

VIDEO INPUT
V1 AL15 IC800 P_V1
R1 AM14 IC800 P_R1
G1 AN14 IC800 P_G1
B1 AL14 IC800 P_B1
R2 AK12 IC800 P_R2
G2 AM13 IC800 P_G2
B2 AL13 IC800 P_B2

LOCK/LD6
VC1_N AJ16 IC800 P_VC1_N
VC2_N AK15 IC800 P_VC2_N
VC4_N AJ15 IC800 P_VC4_N
SCIDIN1 AH15 IC800 P_SCIDIN1
FBL1_RFAGC2 AJ14 IC800 P_FBL1_RFAGC2

VIDEO OUTPUT
VOUT1 AH16 IC800 P_VOUT1

AUDIO INPUT
LIN1_LP AL12 IC800 P_LIN1_LP
LIN1_RP AN12 IC800 P_LIN1_RP
LIN2_LP AL10 IC800 P_LIN2_LP
LIN2_RP AK11 IC800 P_LIN2_RP
LIN3_LP AL11 IC800 P_LIN3_LP
LIN3_RP AM11 IC800 P_LIN3_RP

AUDIO OUTPUT
LO2_L AL9 IC800 P_LO2_L
LO2_R AK10 IC800 P_LO2_R
HP1_L AM9 IC800 P_HP1_L
HP1_R AN9 IC800 P_HP1_R

LOCK/LD6

V-DAC REF
VCOMP AG16 IC800 P_VCOMP

LOCK/LD6

A-ADC REF
VREF1V5 AM12 IC800 P_VREF1V5

LOCK/LD6

USB REF
USBRREF U3 IC800 P_USBRREF

TEST
FREN Y23 IC800
TESTSEL Y20 IC800

NC
NC T4 IC800
NC AG18 IC800
NC AH18 IC800

LOCK/LD6

STM POWER 3.3V
VDDSTM33 AG20 IC800 P_VDDSTM33
STMADAVDD33 AG22 IC800 STB3.3V

STM REGULATOR OUTPUT 1.1V
VDDSTM11 AG24 IC800 P_VDDSTM11

BE POWER 1.1V
VDD11 L3 IC800 SUB1.1V
VDD11 L11 IC800
VDD11 L12 IC800
VDD11 L14 IC800
VDD11 L15 IC800
VDD11 L16 IC800
VDD11 L18 IC800
VDD11 L20 IC800
VDD11 M11 IC800
VDD11 M12 IC800
VDD11 M13 IC800
VDD11 M15 IC800
VDD11 M17 IC800
VDD11 M19 IC800
VDD11 N11 IC800
VDD11 N12 IC800
VDD11 N14 IC800
VDD11 N15 IC800
VDD11 N16 IC800
VDD11 N18 IC800
VDD11 N20 IC800
VDD11 P11 IC800
VDD11 P12 IC800
VDD11 P13 IC800
VDD11 P14 IC800
VDD11 P15 IC800
VDD11 P17 IC800
VDD11 P18 IC800
VDD11 P19 IC800
VDD11 R14 IC800
VDD11 R16 IC800
VDD11 R18 IC800
VDD11 R20 IC800
VDD11 T14 IC800
VDD11 T15 IC800
VDD11 T17 IC800
VDD11 T19 IC800
VDD11 T21 IC800
VDD11 U16 IC800
VDD11 U18 IC800
VDD11 U20 IC800
VDD11 V17 IC800
VDD11 V19 IC800
VDD11 W13 IC800
VDD11 W16 IC800
VDD11 W18 IC800
VDD11 W20 IC800
VDD11 Y11 IC800
VDD11 Y12 IC800
VDD11 Y19 IC800
LVDD11 W21 IC800 SUB1.1V
LVDD11 W22 IC800 LVDSSS V21 IC800
LVDD11 W23 IC800 LVDSSS V22 IC800
LVDSSS V23 IC800
AVDDUSB30_11 U14 IC800 P_AVDDUSB30_11
DVDDUSB30_11 T13 IC800 P_DVDDUSB30_11

VADC REGULATOR OUTPUT 1.1V
AVDDVAD11 AA17 IC800 P_AVDDVAD11
AVDDVAD11 AB17 IC800
AVDDVAD11 AC17 IC800

BE POWER 1.5V
VDDIO15 D14 IC800 SUB1.5V
VDDIO15 D17 IC800
VDDIO15 D21 IC800
VDDIO15 D26 IC800
VDDIO15 F13 IC800
VDDIO15 G14 IC800
VDDIO15 G17 IC800
VDDIO15 G23 IC800
VDDIO15 G25 IC800
VDDIO15 H27 IC800
VDDIO15 L29 IC800
VDDIO15 N27 IC800
VDDIO15 R28 IC800
VDDIO15 D29 IC800 P_VDDIO15
VDDIO15 E29 IC800

DIO REG OUTPUT 1.5V
DDR3VOUT D30 IC800 P_DDR3VOUT

BE POWER 3.3V
VDD33 P21 IC800 SUB3.3V
VDD33 P22 IC800
VDD33 R21 IC800
VDD33 R22 IC800
LVDD33 L21 IC800 P_LVDD33
LVDD33 L22 IC800 LVSS L27 IC800
LVDD33 L23 IC800 LVSS V27 IC800
DPAVDD33 N21 IC800 SUB3.3V

VSS GND
VSS G20 IC800
VSS G25 IC800
VSS D22 IC800
VSS E12 IC800
VSS E19 IC800
VSS E28 IC800
VSS F30 IC800
VSS G13 IC800
VSS G16 IC800
VSS G18 IC800
VSS G20 IC800
VSS G22 IC800
VSS G24 IC800
VSS H8 IC800
VSS J31 IC800
VSS K27 IC800
VSS L13 IC800
VSS L17 IC800
VSS L19 IC800
VSS L21 IC800
VSS L22 IC800
VSS L23 IC800
VSS M14 IC800
VSS M16 IC800
VSS M18 IC800
VSS M20 IC800
VSS M21 IC800
VSS M22 IC800
VSS M23 IC800
VSS M27 IC800
VSS N13 IC800
VSS N17 IC800
VSS N19 IC800
VSS N22 IC800
VSS N23 IC800
VSS P16 IC800
VSS P20 IC800
VSS P23 IC800
VSS P27 IC800
VSS R15 IC800
VSS R17 IC800
VSS R19 IC800
VSS R23 IC800
VSS T11 IC800
VSS T12 IC800
VSS T16 IC800
VSS T18 IC800
VSS T20 IC800
VSS T22 IC800
VSS T23 IC800
VSS T27 IC800
VSS U15 IC800
VSS U17 IC800
VSS U19 IC800
VSS V11 IC800
VSS V12 IC800
VSS V14 IC800
VSS V15 IC800
VSS V16 IC800
VSS V18 IC800
VSS V20 IC800
VSS W14 IC800
VSS W15 IC800
VSS W17 IC800
VSS W19 IC800
VSS Y15 IC800
VSS Y16 IC800
VSS Y18 IC800
VSS Y21 IC800
VSS Y22 IC800
VSS Y27 IC800
VSS AA11 IC800
VSS AA12 IC800
VSS AA18 IC800
VSS AA19 IC800
VSS AA20 IC800
VSS AA22 IC800
VSS AA23 IC800
VSS AB11 IC800
VSS AB12 IC800
VSS AB15 IC800
VSS AB18 IC800
VSS AB19 IC800
VSS AB20 IC800
VSS AB22 IC800
VSS AB23 IC800
VSS AB28 IC800
VSS AC11 IC800
VSS AC12 IC800
VSS AC15 IC800
VSS AC18 IC800
VSS AC19 IC800
VSS AC20 IC800
VSS AC22 IC800
VSS AC23 IC800
VSS AD4 IC800
VSS AD27 IC800
VSS AG4 IC800
VSS AG15 IC800
VSS AJ4 IC800
VSS AK5 IC800
VSS AK16 IC800
VSS AL17 IC800
VSS AL25 IC800

BE POWER HDMI 3.3V
AVDD33 V13 IC800 HDMI3.3V
AVDD33 W11 IC800
AVDD33 W12 IC800

BE POWER WOL 3.3V
VDDWOL33 AA21 IC800 WOL3.3V
VDDWOL33 AB21 IC800
VDDWOL33 AC21 IC800

BE POWER ANALOG 3.3V
AVDDEVE33 AA15 IC800 P_AVDDEVE33
AVDDEVE33 AB16 IC800
AVDDEVE33 AC16 IC800
AVDD-P33 AA13 IC800 P_AVDD33
AVDD-P33 AB13 IC800
AVDD-P33 AC13 IC800
AVDDPLL33 V13 IC800 P_AVDD33
AVDD33 V14 IC800 P_AVDD33
AVDDDM33 V17 IC800 P_AVDDDM33
AVDDADA33 AA14 IC800 P_AVDDADA33
AVDDADA33 AB14 IC800 AVSSADA AA15 IC800
AVDDADA33 AC14 IC800
AVDDUSB20_33 R11 IC800 P_AVDD33
AVDDUSB20_33 R12 IC800
AVDDUSB20_33 R13 IC800
AVDDUSB30_33 U11 IC800 P_AVDDUSB30_33
AVDDUSB30_33 U12 IC800 AVSSUSB30 W4 IC800
AVDDUSB30_33 U13 IC800 AVSSUSB30 Y3 IC800

A-BOARD (11/13)

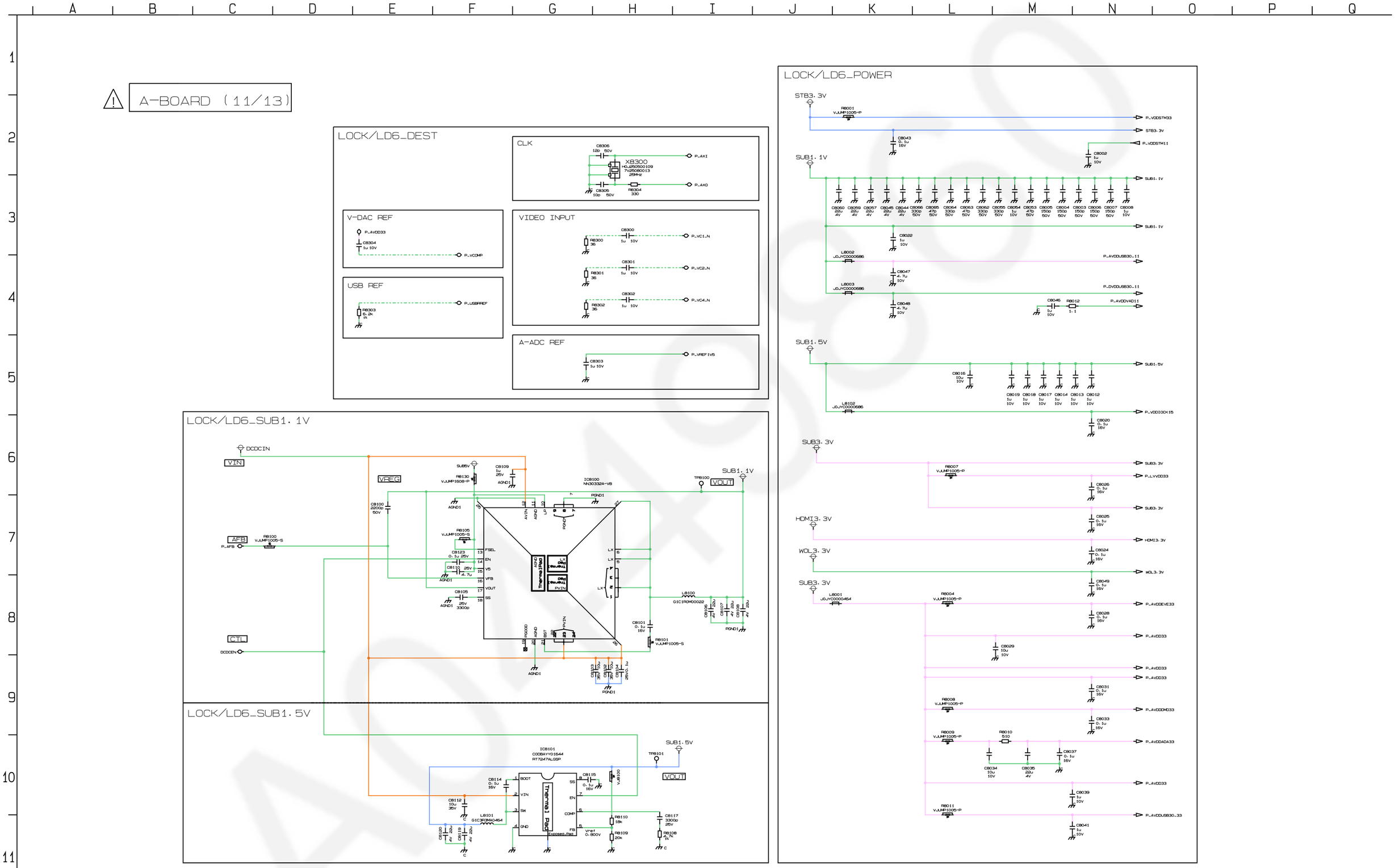
LOCK/LD6_DEST
CLK
X8300
V-DAC REF
USB REF
VIDEO INPUT
A-ADC REF
LOCK/LD6_SUB1.1V
LOCK/LD6_SUB1.5V
LOCK/LD6_POWER
STB3.3V
SUB1.1V
SUB1.5V
SUB3.3V
HDMI3.3V
WOL3.3V
VIN
VREG
VOUT
AFB
CTL
DCDCIN
ICB100
ICB101
Thermal Pad

A-BOARD (12/13)

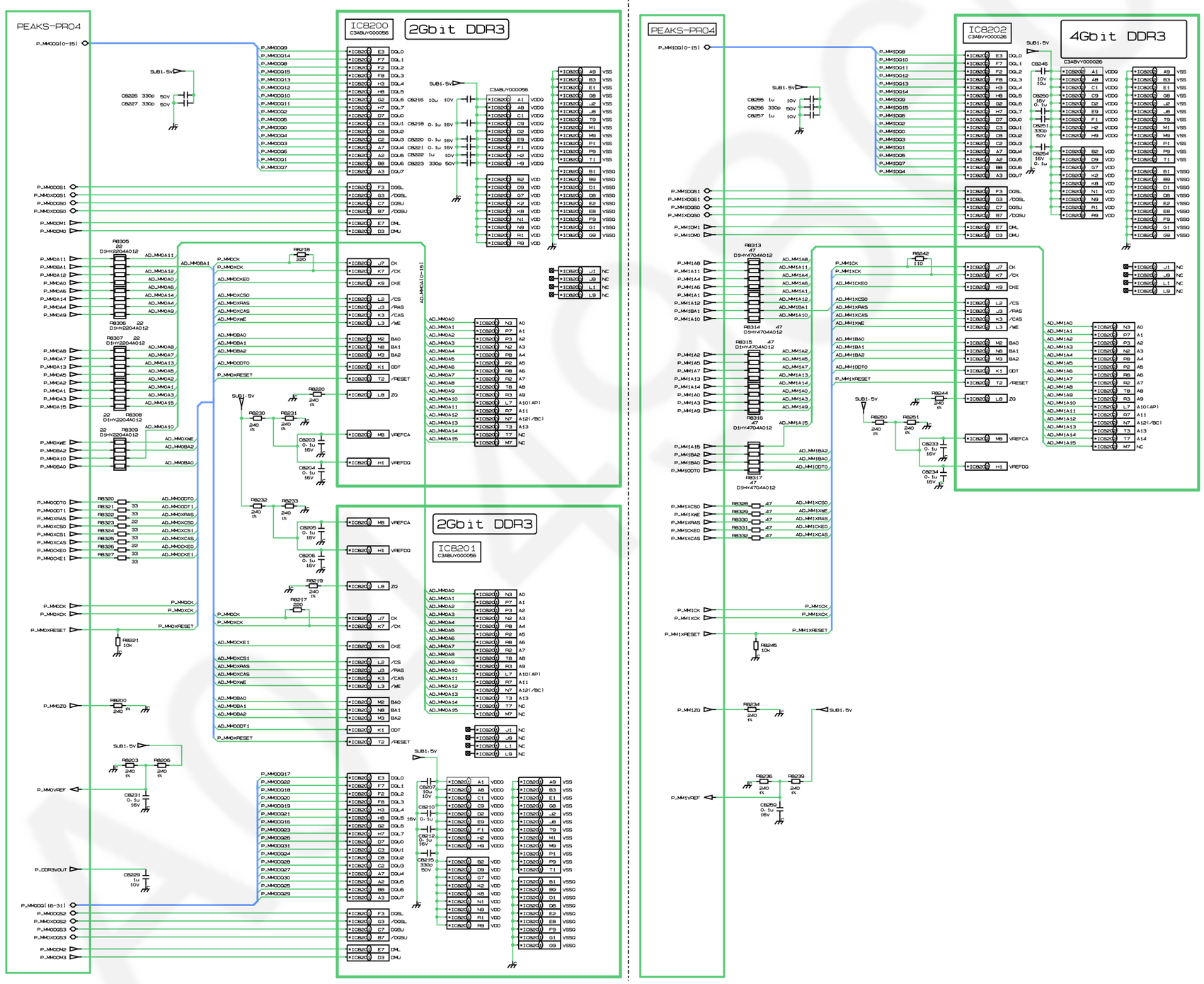
PEAKS-PR04
IC8200
C3ABUY000056
2Gbit DDR3
IC8201
C3ABUY000056
2Gbit DDR3
IC8202
C3ABVY000026
4Gbit DDR3
PEAKS-PR04

A-BOARD (13/13)

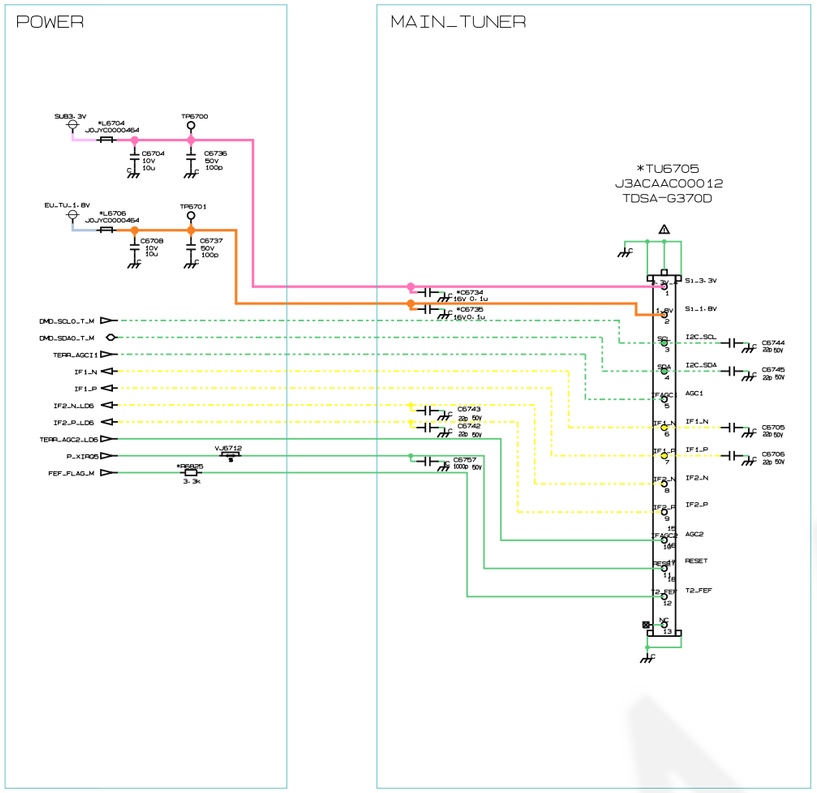
POWER
MAIN_TUNER
*TU6705
J3ACAAC00012
TDSA-G370D

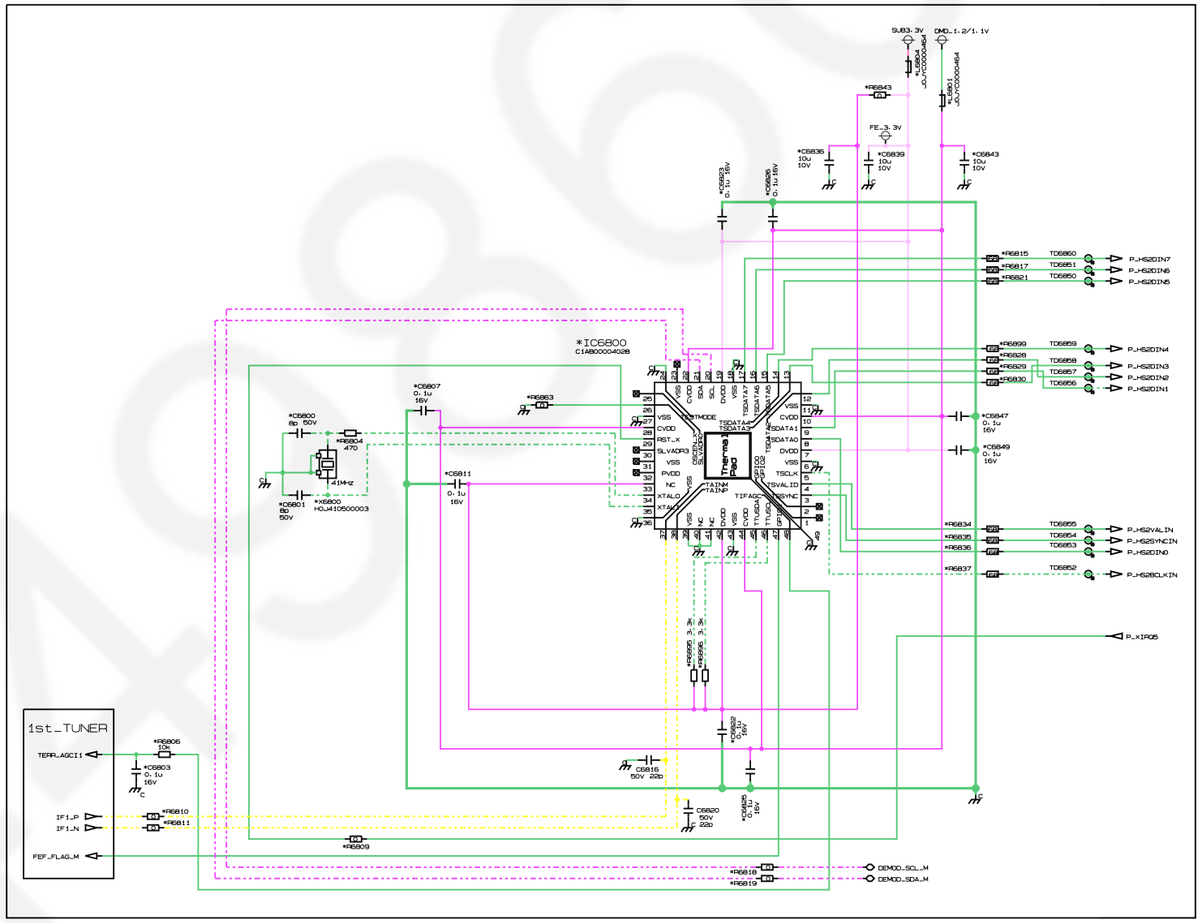
*IC6800
C1AB000004028
1st_TUNER

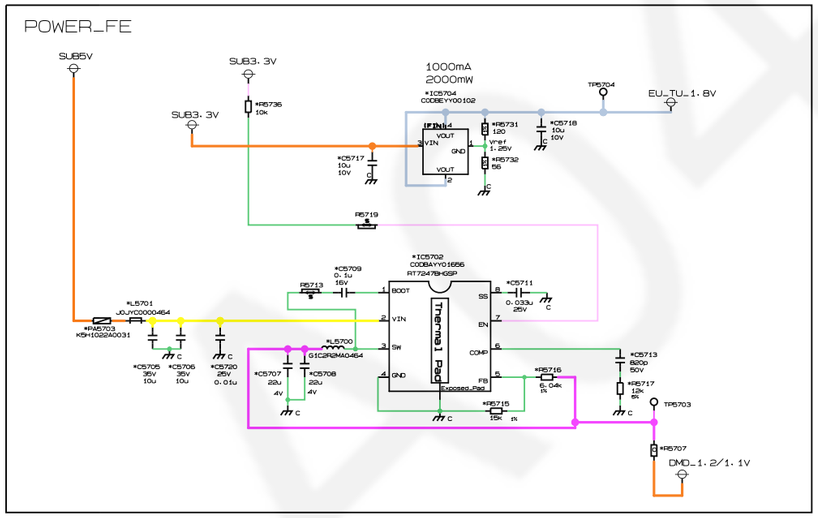
POWER_FE
1000mA
2000mW

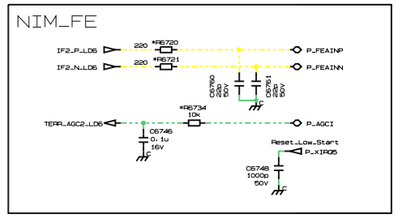
NIM_FE

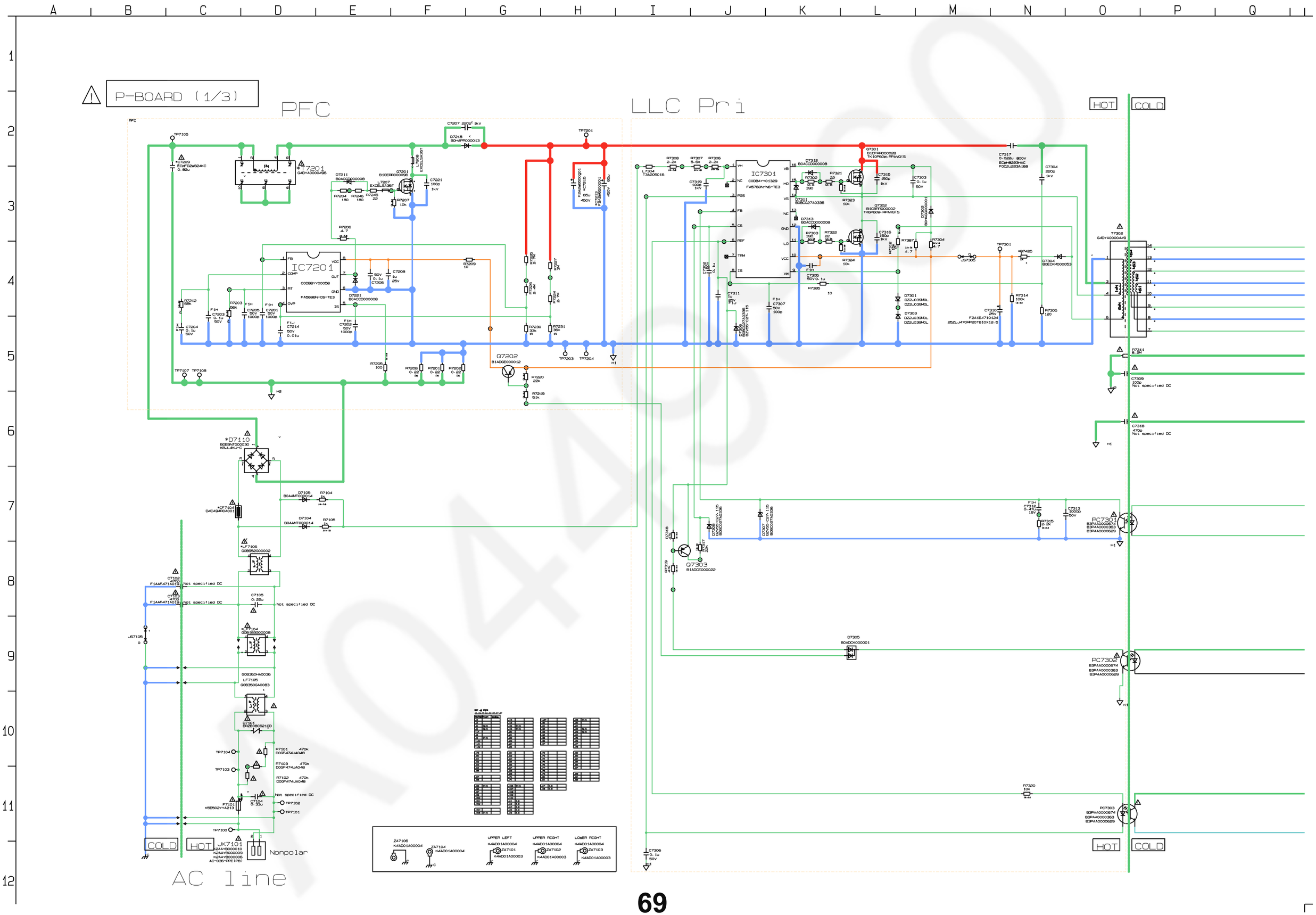
P-BOARD (1/3)
PFC
LLC Pri
HOT
COLD
IC7201
IC7301
T7201
T7302
Q7202
Q7301
Q7302
Q7303
PC7301
PC7302
PC7303
D7110
JK7101
Nonpolar
AC line

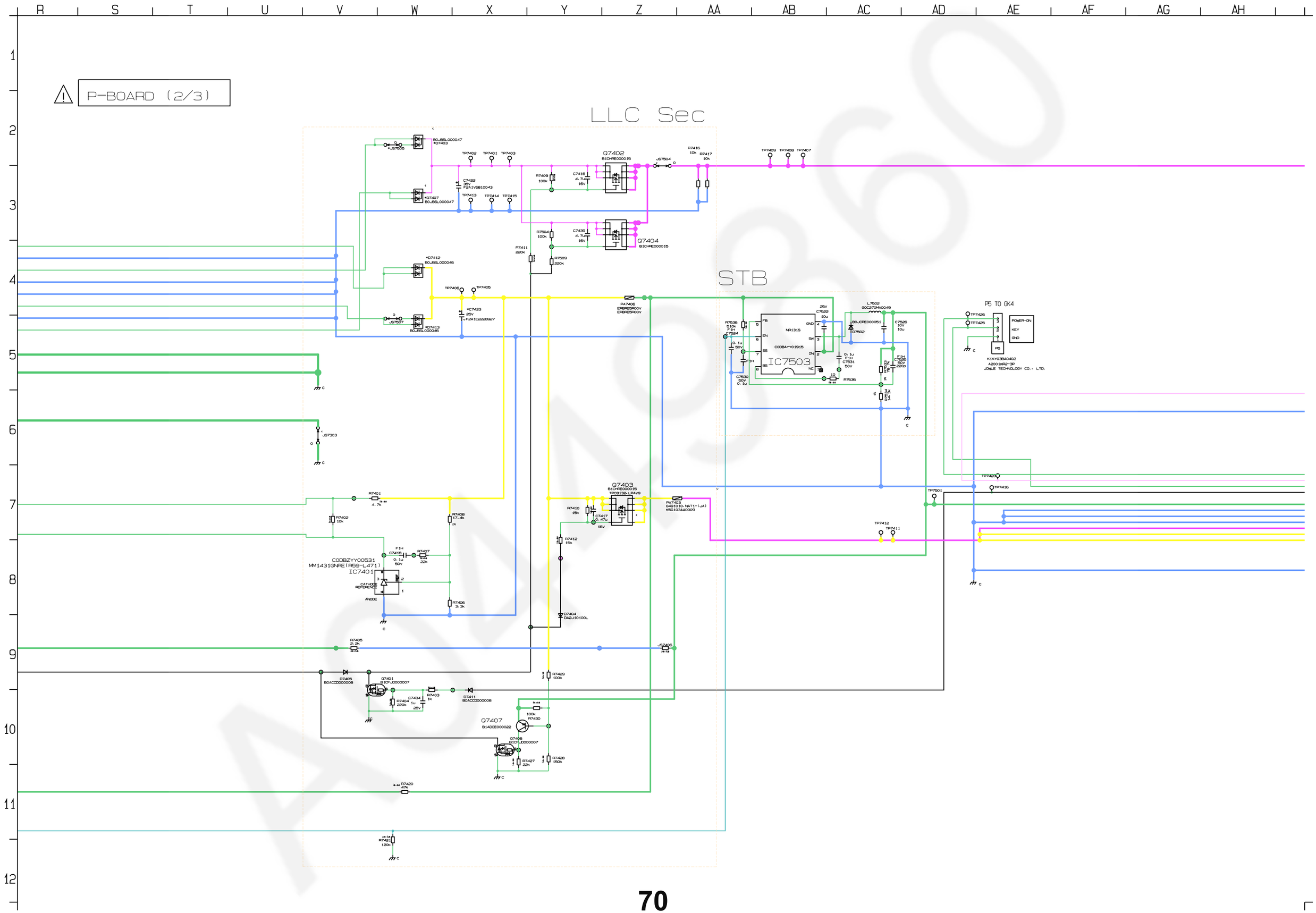
P-BOARD (2/3)
LLC Sec
STB
Q7402
Q7404
Q7403
Q7407
IC7503
IC7401
P5 TO GK4
POWER-ON
KEY
GND

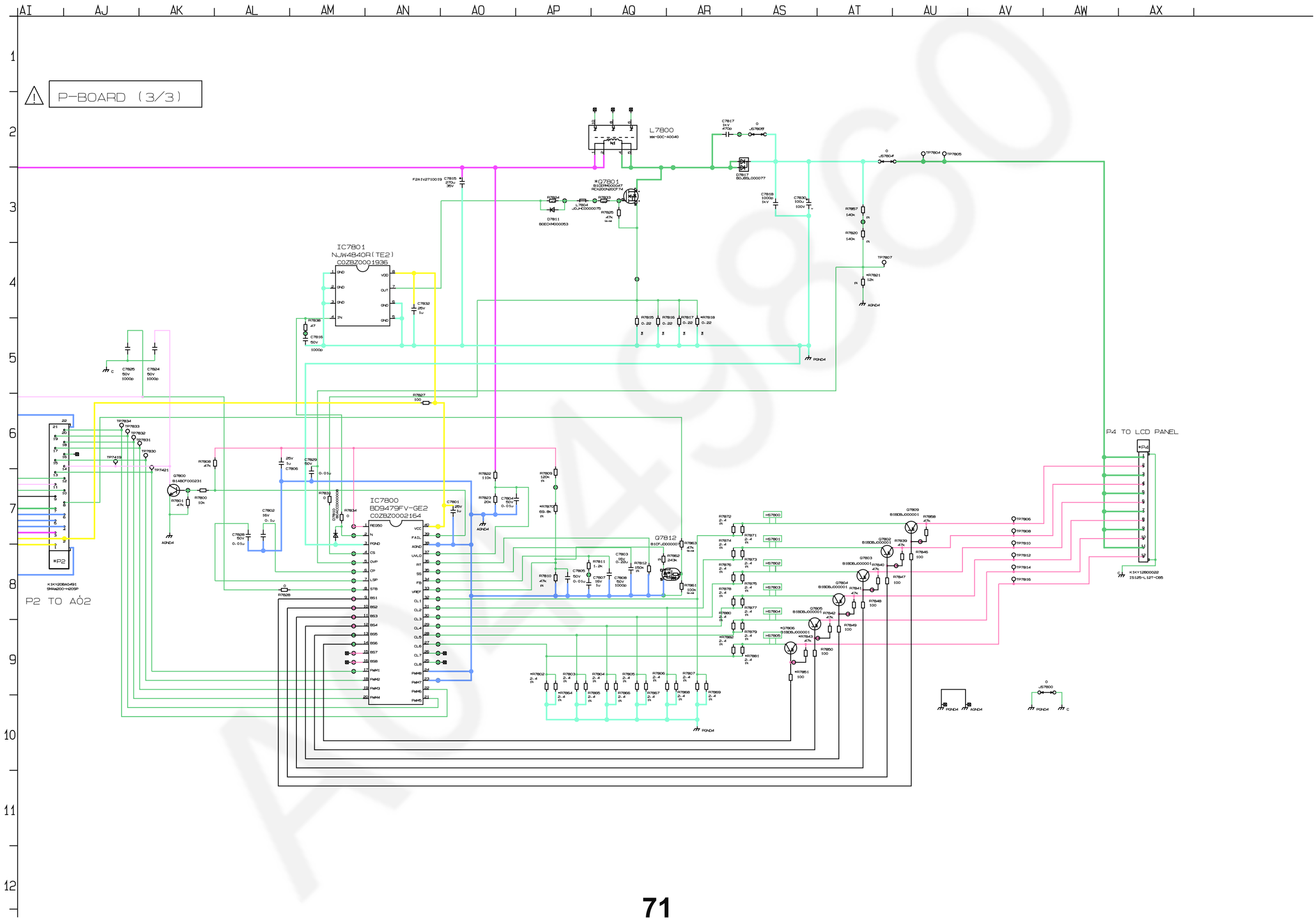
P-BOARD (3/3)
L7800
WK-GGC-A0040
IC7801
NJW4840R(TE2)
C0ZBZ0001936
IC7800
BD9479FV-GE2
C0ZBZ0002164
*Q7801
Q7812
P2 TO AO2
P4 TO LCD PANEL
*P2
*P4
PGND4
AGND4

K-BOARD

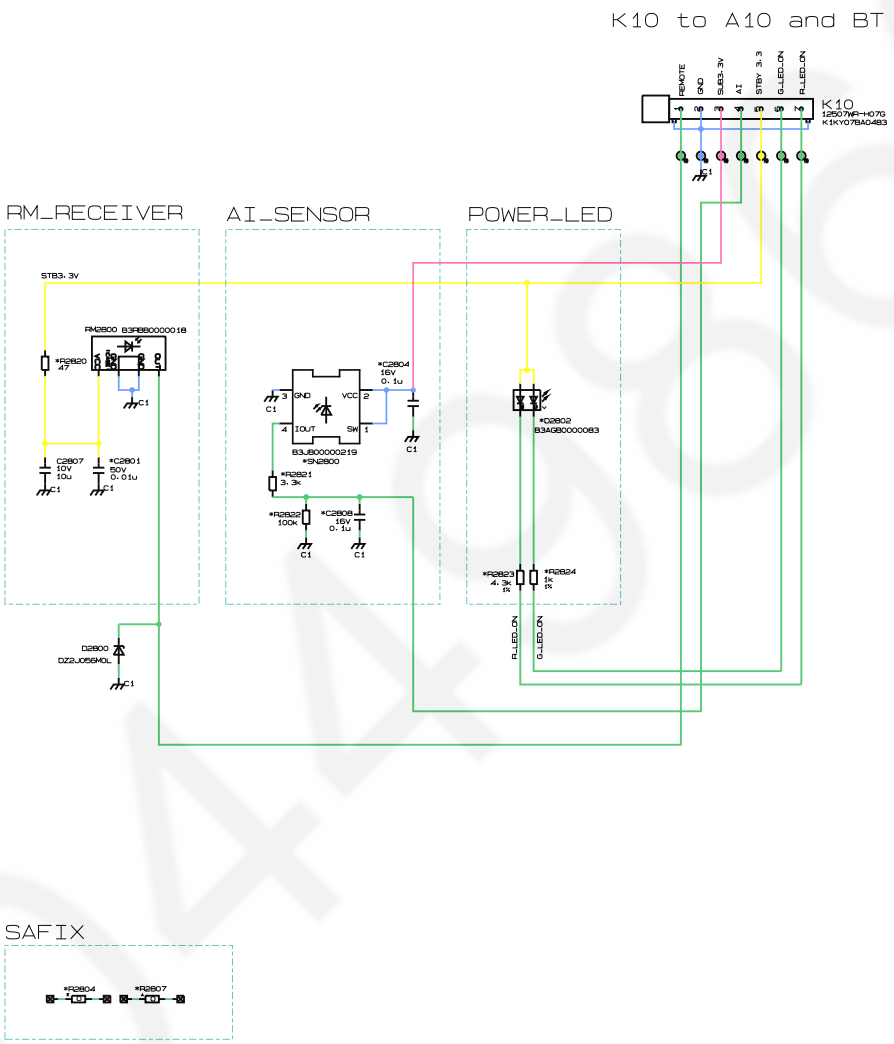
K10 to A10 and BT
REMOTE
GND
SUB3.3V
AI
STBY 3.3
G_LED_ON
R_LED_ON
K10
12507WR-H07G
K1KY07BA0483
RM_RECEIVER
AI_SENSOR
POWER_LED
STB3.3V
RM2800 B3RB8000018
*R2820
47
C2807
10V
10u
*C2801
50V
0.01u
D2800
DZ2J056M0L
GND
VCC
IOUT
SW
B3JB0000219
*SN2800
*C2804
16V
0.1u
*R2821
3.3k
*R2822
100k
*C2808
16V
0.1u
*C2802
B3AGB0000083
*R2823
4.3k
1%
*R2824
1k
1%
R_LED_ON
G_LED_ON
SAFIX
*R2804
*R2807

GK-BOARD

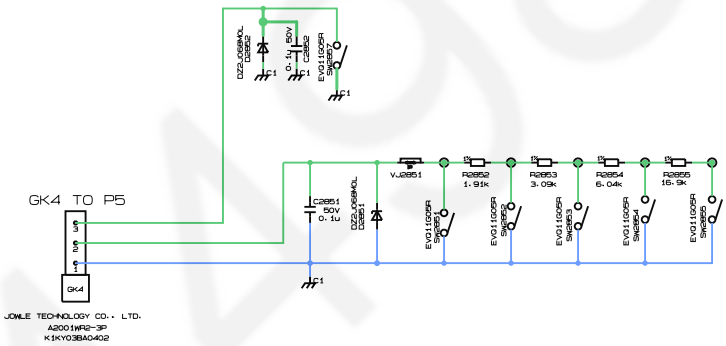
GK4 TO P5
GK4
JOMLE TECHNOLOGY CO., LTD.
A2001WR2-3P
K1KY03BA0402
DZ2-068WKL
DZ8862
0.1μ
50V
C8862
EVQ11G05R
SW887
C2851
50V
0.1V
DZ2-068WKL
DZ8861
V.2851
R2852
1.91k
R2853
3.09k
R2854
6.04k
R2855
16.9k
EVQ11G05R
SW852
SW853
SW854
SW855

# Conductor Views

## A-BOARD - TOP

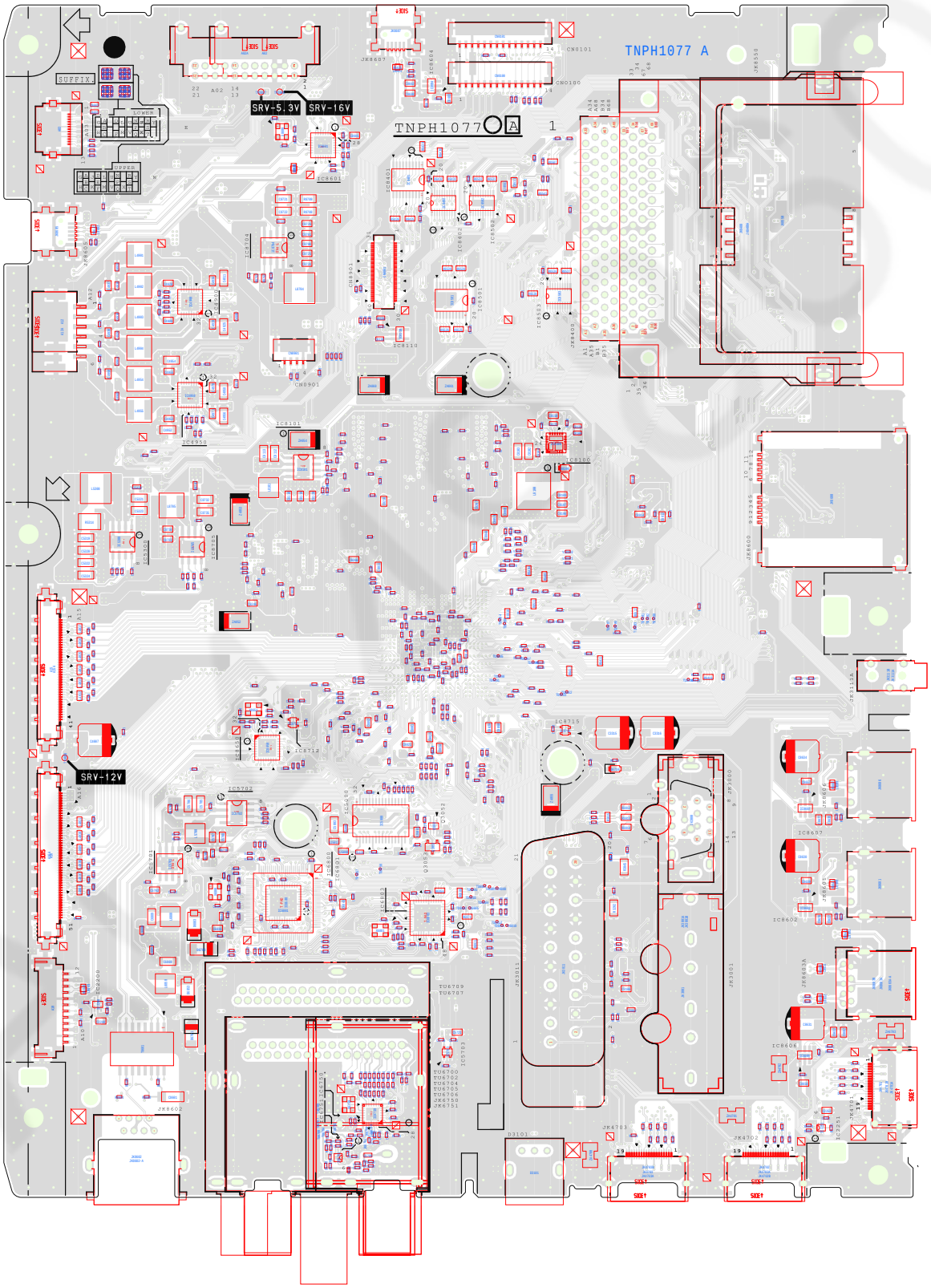

## A-BOARD - BOTTOM

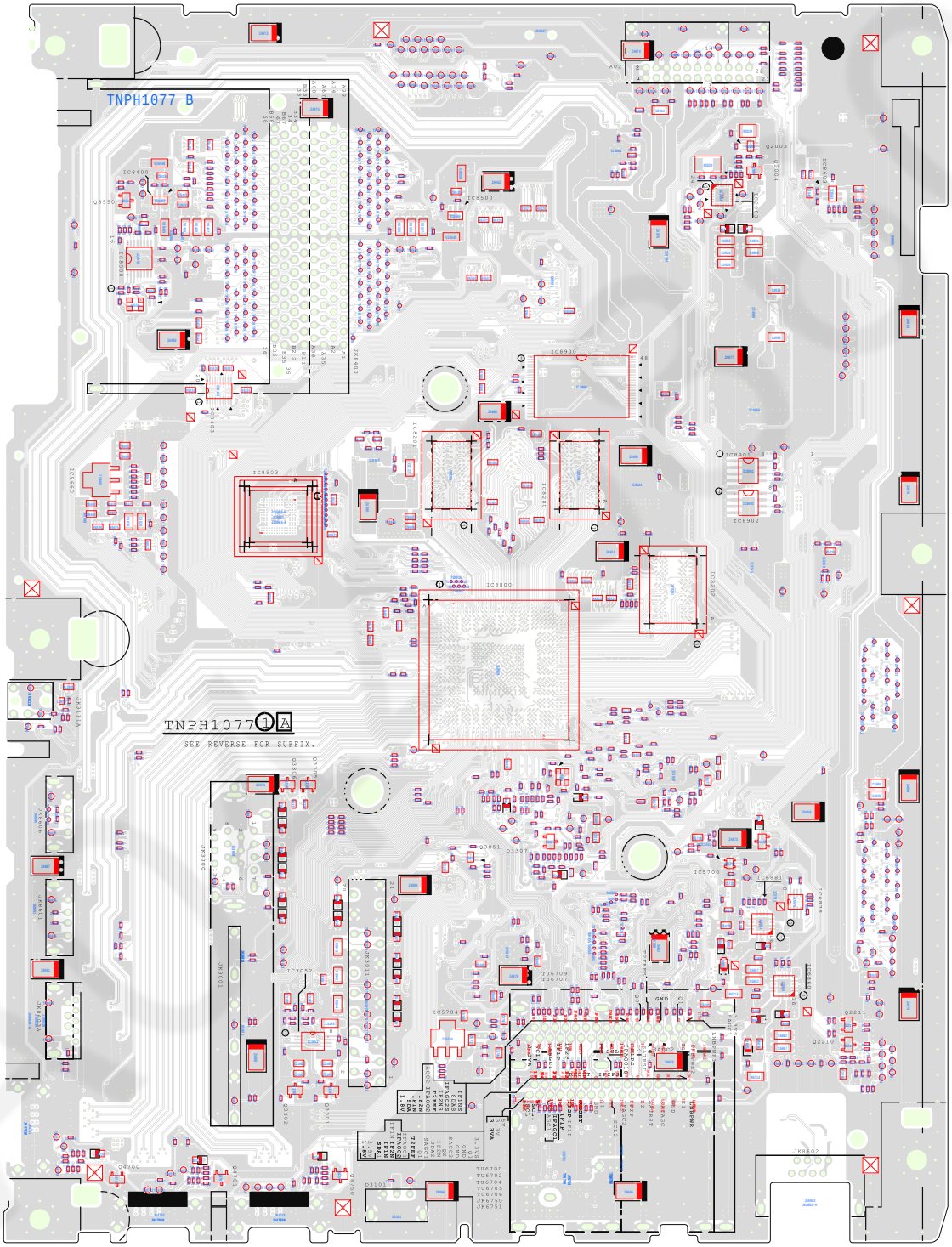

## P-BOARD - TOP

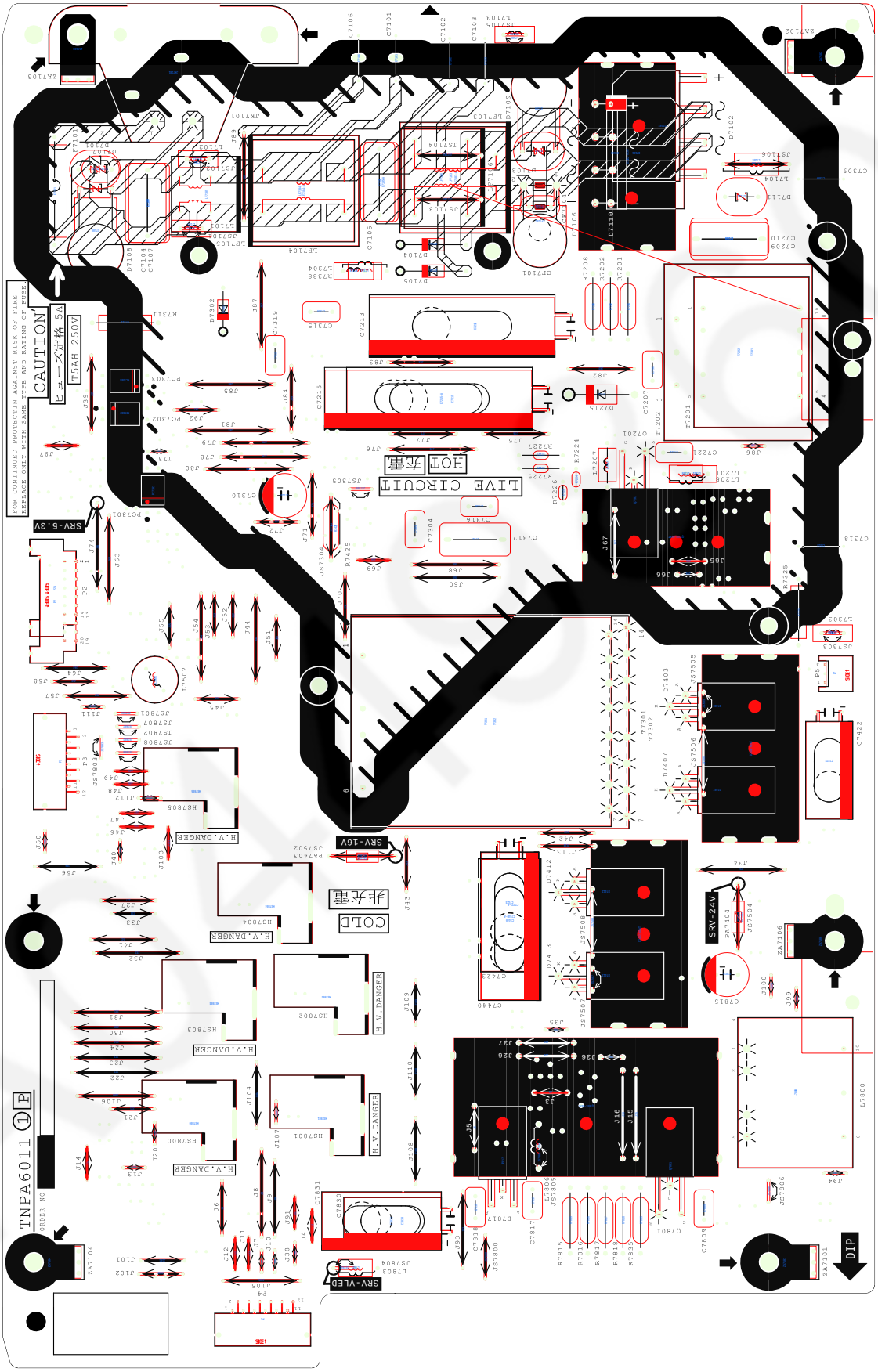
CAUTION
FOR CONTINUED PROTECTION AGAINST RISK OF FIRE
REPLACE ONLY WITH SAME TYPE AND RATING OF FUSE
T5AH 250V
LIVE CIRCUIT
HOT 热
COLD 非热
H.V.DANGER
SRV-5.3V
SRV-16V
SRV-24V
SRV-VLED
DIP
TNPA6011 1P

## P-BOARD - BOTTOM

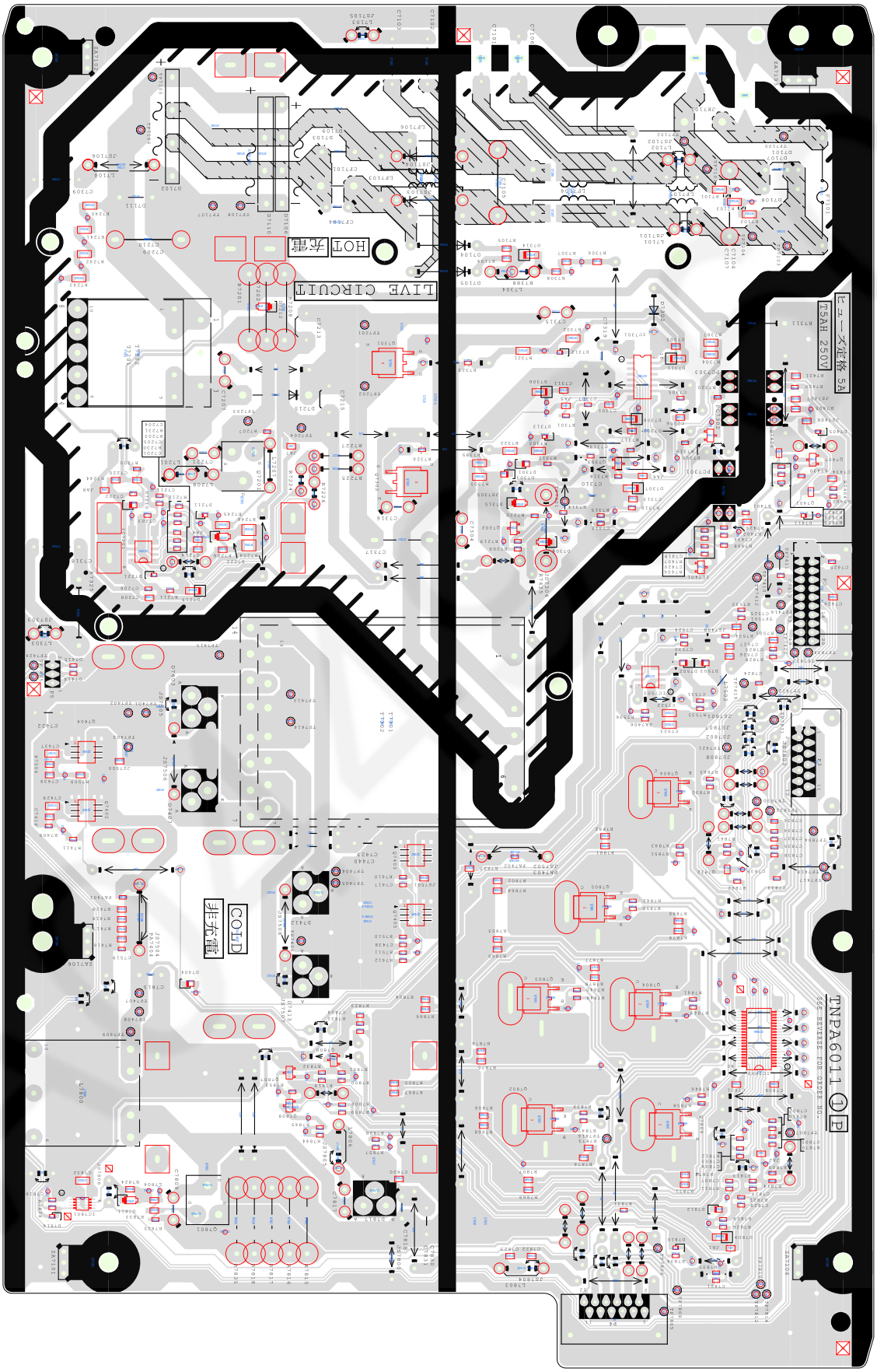

## K-BOARD

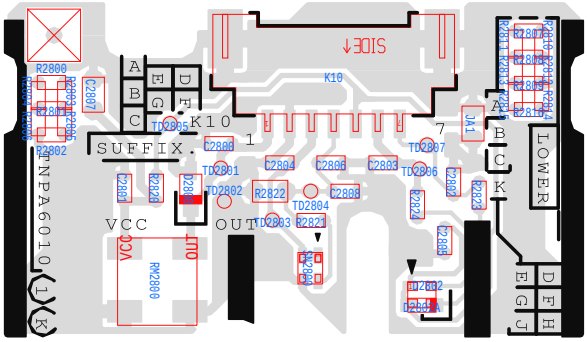
R2800
C2807
C2805
C2806
R2802
TNPA6010
1
2
A
B
C
E
G
D
F
K10
SUFFIX.
TD2805
C2808
TD2801
TD2802
R2822
C2804
C2806
C2803
TD2804
TD2803
R2823
VCC
OUT
RM2800
TD2806
TD2807
R2824
C2802
R2829
C2809
TD2802
SIDE↑
K10
7
DA1
A
B
C
K
LOWER
E
G
J
D
F
H

## GK-BOARD - TOP

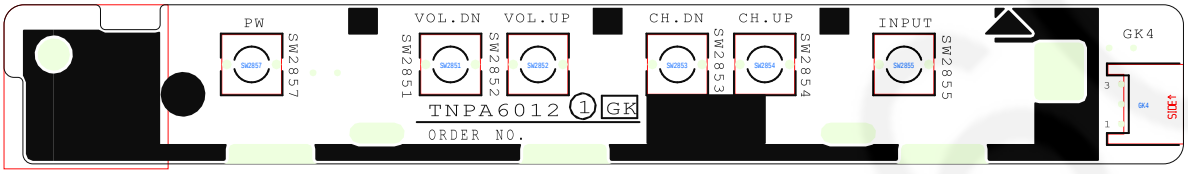

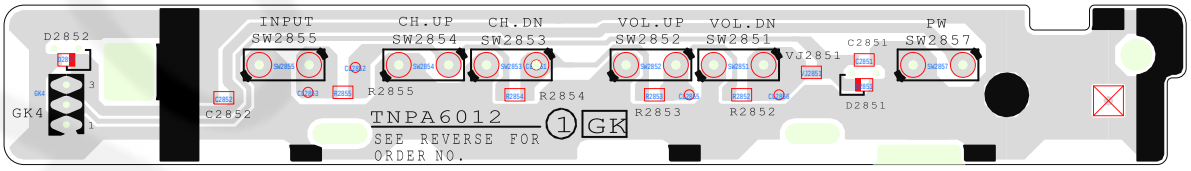
## GK-BOARD - BOTTOM