ORDER NO.PAVCTH1203006CE

Service Manual

Plasma Television

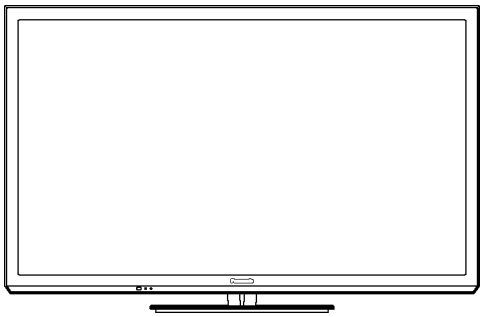

Model No. **TH-P50UT50A**
TH-P50UT50D
TH-P50UT50G
TH-P50UT50K
TH-P50UT50M
TH-P50UT50P
TH-P50UT50S
TH-P50UT50V
TH-P50UT50Z

GPF15-A Chassis

⚠ WARNING

This service information is designed for experienced repair technicians only and is not designed for use by the general public.
It does not contain warnings or cautions to advise non-technical individuals of potential dangers in attempting to service a product.
Products powered by electricity should be serviced or repaired only by experienced professional technicians. Any attempt to service or repair the product or products dealt with in this service information by anyone else could result in serious injury or death.

IMPORTANT SAFETY NOTICE

There are special components used in this equipment which are important for safety. These parts are marked by ⚠ in the Schematic Diagrams, Circuit Board Diagrams, Exploded Views and Replacement Parts List. It is essential that these critical parts should be replaced with manufacturer's specified parts to prevent shock, fire or other hazards. Do not modify the original design without permission of manufacturer.

Panasonic®

© Panasonic Corporation 2012.
Unauthorized copying and distribution is a violation of law.

TABLE OF CONTENTS

PAGE

1 Safety Precautions ---------- 3
1.1. General Guidelines ---------- 3
1.2. Touch-Current Check ---------- 3
2 Warning ---------- 4
2.1. Prevention of Electrostatic Discharge (ESD) to Electrostatically Sensitive (ES) Devices ---------- 4
2.2. About lead free solder (PbF) ---------- 5
3 Service Navigation ---------- 6
3.1. PCB Layout ---------- 6
3.2. Applicable signals ---------- 7
4 Specifications ---------- 8
5 Technical Descriptions ---------- 10
5.1. Specification of KEY for DTCP-IP, One-to-One, Widevine and Netflix ---------- 10
5.2. USB HDD Recording (A/Z only) ---------- 10
5.3. Panel-Type setting ---------- 10
6 Service Mode ---------- 11
6.1. How to enter into Service Mode ---------- 11
6.2. Option - Mirror ---------- 13
6.3. Service tool mode ---------- 13
6.4. DRV Check - USB HDD Check ---------- 14
6.5. Hotel mode ---------- 14
6.6. Data Copy by SD Card ---------- 15
7 Troubleshooting Guide ---------- 18
7.1. Check of the IIC bus lines ---------- 18
7.2. Power LED Blinking timing chart ---------- 19
7.3. No Power ---------- 20
7.4. No Picture ---------- 21
7.5. Local screen failure ---------- 22
8 Service Fixture & Tools ---------- 23
8.1. SC jig ---------- 23
9 Disassembly and Assembly Instructions ---------- 24
9.1. Disassembly Flow Chart for the Unit ---------- 24
9.2. Disassembly Procedure for the Unit ---------- 25
10 Measurements and Adjustments ---------- 30
10.1. Adjustment ---------- 30
11 Block Diagram ---------- 33
11.1. Main Block Diagram ---------- 33
11.2. Block (1/4) Diagram ---------- 34
11.3. Block (2/4) Diagram ---------- 35
11.4. Block (3/4) Diagram ---------- 36
11.5. Block (4/4) Diagram ---------- 37
12 Wiring Connection Diagram ---------- 39
12.1. Caution statement. ---------- 39
12.2. Wiring (1) ---------- 39
12.3. Wiring (2) ---------- 40
12.4. Wiring (3) ---------- 40
12.5. Wiring (4) ---------- 41
13 Schematic Diagram
14 Printed Circuit Board
15 Exploded View

1 Safety Precautions

1.1. General Guidelines

1. When conducting repairs and servicing, do not attempt to modify the equipment, its parts or its materials.
2. When wiring units (with cables, flexible cables or lead wires) are supplied as repair parts and only one wire or some of the wires have been broken or disconnected, do not attempt to repair or re-wire the units. Replace the entire wiring unit instead.
3. When conducting repairs and servicing, do not twist the Fasten connectors but plug them straight in or unplug them straight out.
4. When servicing, observe the original lead dress. If a short circuit is found, replace all parts which have been overheated or damaged by the short circuit.
5. After servicing, see to it that all the protective devices such as insulation barriers, insulation papers shields are properly installed.
6. After servicing, make the following leakage current checks to prevent the customer from being exposed to shock hazards.

1.2. Touch-Current Check

1. Plug the AC cord directly into the AC outlet. Do not use an isolation transformer for this check.
2. Connect a measuring network for touch currents between each exposed metallic part on the set and a good earth ground such as a water pipe, as shown in Figure 1.
3. Use Leakage Current Tester (Simpson 228 or equivalent) to measure the potential across the measuring network.
4. Check each exposed metallic part, and measure the voltage at each point.
5. Reserve the AC plug in the AC outlet and repeat each of the above measure.
6. The potential at any point (TOUCH CURRENT) expressed as voltage U_1 and U_2, does not exceed the following values:

   For a. c.: U_1 = 35 V (peak) and U_2 = 0.35 V (peak);

   For d. c.: U_1 = 1.0 V,

   Note:

   The limit value of U_2 = 0.35 V (peak) for a. c. and U_1 = 1.0 V for d. c. correspond to the values 0.7 mA (peak) a. c. and 2.0 mA d. c.

   The limit value U_1 = 35 V (peak) for a. c. correspond to the value 70 mA (peak) a. c. for frequencies greater than 100 kHz.
7. In case a measurement is out of the limits specified, there is a possibility of a shock hazard, and the equipment should be repaired and rechecked before it is returned to the customer.

Measuring network for TOUCH CURRENTS

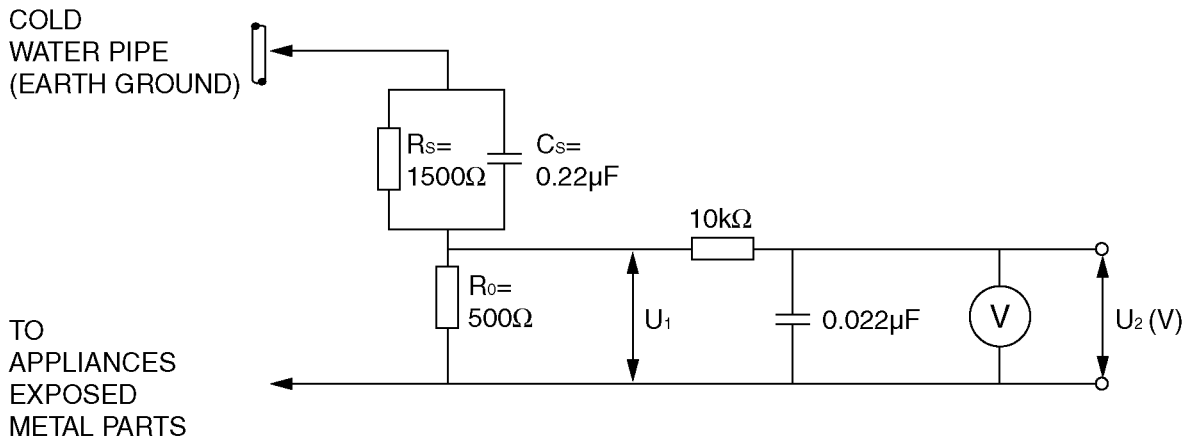

Resistance values in ohms (Ω)

V: Voltmeter or oscilloscope
(r.m.s. or peak reading)

Input resistance: ≥ 1 MΩ
Input capacitance: ≤ 200 pF
Frequency range: 15 Hz to 1 MHz and d.c. respectively

NOTE - Appropriate measures should be taken to obtain the correct value in case of non-sinusoidal waveforms.

Figure 1

2 Warning

2.1. Prevention of Electrostatic Discharge (ESD) to Electrostatically Sensitive (ES) Devices

Some semiconductor (solid state) devices can be damaged easily by static electricity. Such components commonly are called Electrostatically Sensitive (ES) Devices. Examples of typical ES devices are integrated circuits and some field-effect transistors and semiconductor [chip] components. The following techniques should be used to help reduce the incidence of component damage caused by electrostatic discharge (ESD).

1. Immediately before handling any semiconductor component or semiconductor-equipped assembly, drain off any ESD on your body by touching a known earth ground. Alternatively, obtain and wear a commercially available discharging ESD wrist strap, which should be removed for potential shock reasons prior to applying power to the unit under test.
2. After removing an electrical assembly equipped with ES devices, place the assembly on a conductive surface such as aluminum foil, to prevent electrostatic charge buildup or exposure of the assembly.
3. Use only a grounded-tip soldering iron to solder or unsolder ES devices.
4. Use only an anti-static solder removal device. Some solder removal devices not classified as [anti-static (ESD protected)] can generate electrical charge sufficient to damage ES devices.
5. Do not use freon-propelled chemicals. These can generate electrical charges sufficient to damage ES devices.
6. Do not remove a replacement ES device from its protective package until immediately before you are ready to install it. (Most replacement ES devices are packaged with leads electrically shorted together by conductive foam, aluminum foil or comparable conductive material).
7. Immediately before removing the protective material from the leads of a replacement ES device, touch the protective material to the chassis or circuit assembly into which the device will be installed.
   Caution
   Be sure no power is applied to the chassis or circuit, and observe all other safety precautions.
8. Minimize bodily motions when handling unpackaged replacement ES devices. (Otherwise ham less motion such as the brushing together of your clothes fabric or the lifting of your foot from a carpeted floor can generate static electricity (ESD) sufficient to damage an ES device).

2.2. About lead free solder (PbF)

Note: Lead is listed as (Pb) in the periodic table of elements.
In the information below, Pb will refer to Lead solder, and PbF will refer to Lead Free Solder.
The Lead Free Solder used in our manufacturing process and discussed below is (Sn+Ag+Cu).
That is Tin (Sn), Silver (Ag) and Copper (Cu) although other types are available.

This model uses Pb Free solder in it's manufacture due to environmental conservation issues. For service and repair work, we'd suggest the use of Pb free solder as well, although Pb solder may be used.

PCBs manufactured using lead free solder will have the PbF within a leaf Symbol **PbF** stamped on the back of PCB.

Caution

- Pb free solder has a higher melting point than standard solder. Typically the melting point is 50 ~ 70 °F (30~40 °C) higher. Please use a high temperature soldering iron and set it to 700 ± 20 °F (370 ± 10 °C).
- Pb free solder will tend to splash when heated too high (about 1100 °F or 600 °C).
  If you must use Pb solder, please completely remove all of the Pb free solder on the pins or solder area before applying Pb solder. If this is not practical, be sure to heat the Pb free solder until it melts, before applying Pb solder.
- After applying PbF solder to double layered boards, please check the component side for excess solder which may flow onto the opposite side. (see figure below)

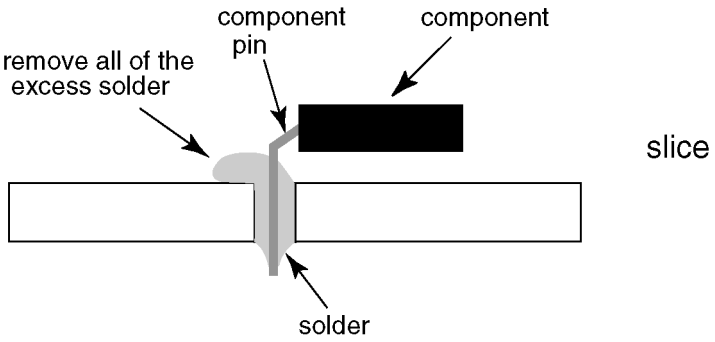

Suggested Pb free solder

There are several kinds of Pb free solder available for purchase. This product uses Sn+Ag+Cu (tin, silver, copper) solder. However, Sn+Cu (tin, copper), Sn+Zn+Bi (tin, zinc, bismuth) solder can also be used.

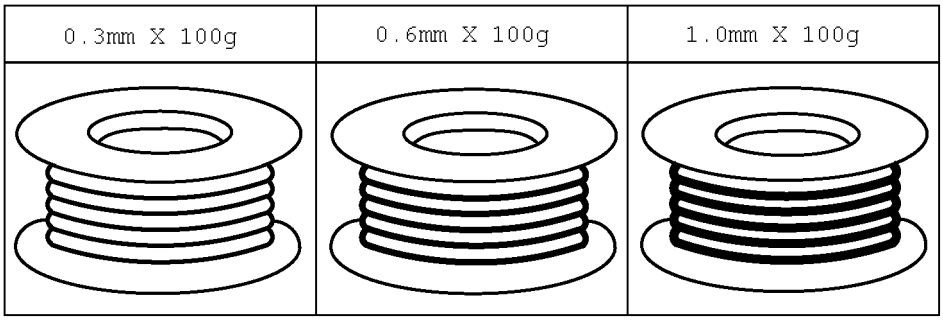

3 Service Navigation

3.1. PCB Layout

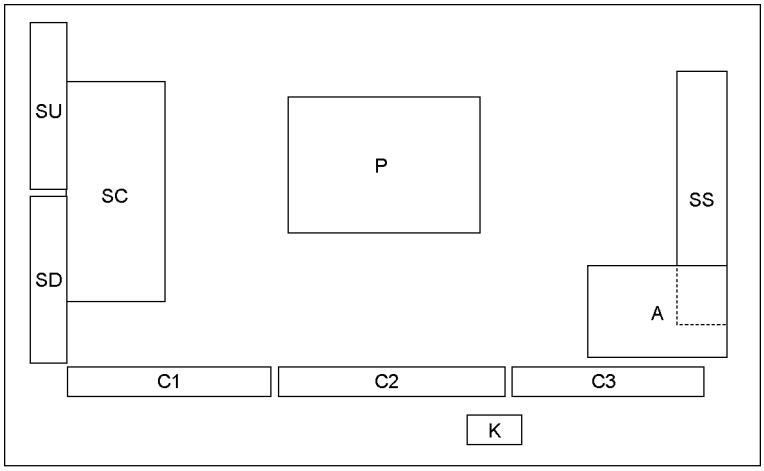

Board Name	Function
P	Power Supply Non serviceable. P-Board should be exchanged for service.
A	Main AV input, processing
K	Remote receiver, Power LED, C.A.T.S sensor
C1	Data Driver (Lower Right)
C2	Data Driver (Lower Center)
C3	Data Driver (Lower Left)
SC	Scan Drive
SS	Sustain Drive
SU	Scan out (Upper) Non serviceable. SU-Board should be exchanged for service.
SD	Scan out (Lower) Non serviceable. SD-Board should be exchanged for service.

3.2. Applicable signals

■ **COMPONENT (Y, P_B, P_R) (from AV2 terminal), HDMI**

Signal name	COMPONENT	HDMI
525 (480) / 60i, 60p	*	*
625 (576) / 50i, 50p	*	*
750 (720) / 60p, 50p	*	*
1,125 (1,080) / 60i, 50i	*	*
1,125 (1,080) / 60p, 50p, 24p		*

* Mark: Applicable input signal

■ **PC (from D-sub 15P)**

Signal name	Horizontal frequency (kHz)	Vertical frequency (Hz)
640 × 480 @60 Hz	31.47	59.94
800 × 600 @60 Hz	37.88	60.32
852 × 480 @60 Hz	31.44	59.89
1,024 × 768 @60 Hz	48.36	60.00
1,280 × 1,024 @60 Hz	63.98	60.02
1,280 × 768 @60 Hz	47.70	60.00
1,366 × 768 @60 Hz	48.39	60.04

Applicable input signal for PC is basically compatible to VESA standard timing.

■ **PC (from HDMI terminal)**

Signal name	Horizontal frequency (kHz)	Vertical frequency (Hz)
640 × 480 @60 Hz	31.47	60.00
1,280 × 720 @60 Hz	45.00	60.00
1,920 × 1,080 @60 Hz	67.50	60.00

Applicable input signal for PC is basically compatible to HDMI standard timing.

Note

- Signals other than above may not be displayed properly.
- The above signals are reformatted for optimal viewing on your display.
- PC signal is magnified or compressed for display, so that it may not show fine detail with sufficient clarity.

4 Specifications

Sound

Speaker	(160 mm × 40 mm) × 2, 8Ω
Audio output	20 W (10 W + 10 W)
Headphones	M3 (3.5 mm) stereo mini Jack × 1

Receiving systems / Band name (A/Z)

PAL B/G	Reception of Off air broadcasts
Digital TV	7 MHz VHF/UHF (Australia) free-to-air TV broadcast reception (A) 8 MHz UHF (New Zealand) free-to-air TV broadcast reception (Z)
PAL 60 Hz	Playback of NTSC tape from some PAL Video recorders (VCR)
M.NTSC	Playback from M.NTSC Video recorders (VCR)
NTSC	Playback from NTSC Video recorders (VCR)

Receiving systems / Band name (Except A/Z)

	17 Systems	Function
1	PAL B, G, H	Reception of broadcast transmissions and Playback from Video Cassette Tape Recorders
2	PAL I	
3	PAL D, K	
4	SECAM B, G	
5	SECAM D, K	
6	SECAM K1	
7	NTSC M (NTSC 3.58/4.5 MHz)	

	17 Systems	Function
8	NTSC 4.43/5.5 MHz	Playback from Special VCR's or DVD
9	NTSC 4.43/6.0 MHz	
10	NTSC 4.43/6.5 MHz	
11	NTSC 3.58/5.5 MHz	
12	NTSC 3.58/6.0 MHz	
13	NTSC 3.58/6.5 MHz	
14	SECAM I	
15	PAL 60 Hz/5.5 MHz	Playback from Special Disc Players and Special VCR's or DVD
16	PAL 60 Hz/6.0 MHz	
17	PAL 60 Hz/6.5 MHz	

Receiving Channels (Except A/Z)

VHF BAND

2-12 (PAL/SECAM B, K1)	0-12 (PAL B AUST.)
1-9 (PAL B N.Z.)	1-12 (PAL/SECAM D)
1-12 (NTSC M Japan)	2-13 (NTSC M USA)

UHF BAND

21-69 (PAL G, H, I/SECAM G, K, K1)	
28-69 (PAL B AUST.)	13-57 (PAL D, K)
13-62 (NTSC M Japan)	14-69 (NTSC M USA)

CATV

S1-S20 (OSCAR)	1-125 (USA CATV)
C13-C49 (JAPAN)	S21-S41 (HYPER)
Z1-Z37 (CHINA)	5A, 9A (AUST.)

Aerial - Rear	Standard Belling & Lee connector (A) VHF / UHF (Except A)	
Operating Conditions		
	Temperature:	0 °C - 40 °C
	Humidity:	20 % - 80 % RH (non-condensing)
Connection terminals		
AV1 IN		
AUDIO L - R	RCA PIN Type × 2	0.5 V [rms]
VIDEO	RCA PIN Type × 1	1.0 V [p-p] (75 Ω)
AUDIO OUT		
AUDIO L-R	RCA PIN Type × 2	0.5 V [rms] (high impedance)
AV2 IN		
AUDIO L - R	RCA PIN Type × 2	0.5 V [rms]
COMPONENT	Y	1.0 V [p-p] (including synchronization)
	P_B/C_B, P_R/C_R	± 0.35 V [p-p]
VIDEO	RCA PIN Type × 1	1.0 V [p-p] (75 Ω)
HDMI 1 / 2 input	TYPE A Connectors • This TV supports "HDAVI control 5" function.	
PC	HIGH-DENSITY D-SUB 15PIN	
	R,G, B:	0.7 V [p-p] (75 Ω)
	HD, VD:	TTL Level 2.0 - 5.0 V [p-p] (high impedance)
	• Applicable input signals:	VGA, SVGA, WVGA, XGA SXGA, WXGA ..... (compressed) Horizontal scanning frequency 31 - 69 kHz Vertical scanning frequency 59 - 86 Hz
Card slot	SD Card slot × 1	
ETHERNET	10BASE-T / 100BASE-TX	
USB 1 / 2	USB 2.0 TYPE A Connectors DC 5 V, Max. 500 mA	
DIGITAL AUDIO OUT	PCM / Dolby Digital / DTS, Fiber optic	
Bluetooth wireless technology*1		
Standard Compliance	Bluetooth 3.0	

Frequency Range	2.402 GHz - 2.480 GHz

*1: Not all the Bluetooth compatible devices are available with this TV.

Power Consumption (A/Z)	
Power rating	AC 220-240 V, 50 / 60 Hz 1.7 A
Normal (Home) mode	137 W
Standby condition	0.4 W
Power Source (Except A/Z)	AC 220 - 240 V, 50 / 60 Hz (Except P) AC 110 - 240 V, 50 / 60 Hz (P)
Power Consumption (Except A/Z)	
Power Rating	330 W
Standby condition	0.4 W
Display panel	
Panel system	Plasma panel
Visible screen size (diagonal)	127 cm / 50 inches
Number of pixels	2,073,600 (1,920 (W) × 1,080 (H)), [5,760 × 1,080 dots]
Dimensions (W × H × D)	1,186 mm × 764 mm × 335 mm (With Pedestal) 1,186 mm × 717 mm × 84 mm (TV only)
Mass	26.0 kg Net (With Pedestal) 23.0 kg Net (TV only)

■ **3D Eyewear (A/Z)**

Dimensions (W × H × D)	167.7 mm × 42.2 mm × 170.7 mm
Mass	Approx. 31 g
Lens type	Liquid Crystal Shutter
Usage temperature range	0 °C - 40 °C
Battery*	Coin-shaped lithium battery CR2025 Operation time: Approx. 75 hours in continuous use of the battery made by Panasonic
Viewing range*	Within 3.2 m from front surface of the TV
Materials	Main body: Resin Lens section: Liquid crystal glass
Communication system	2.4 GHz band FH-SS (Frequency Hopping Spread Spectrum)

* There are differences in the viewing range of the 3D Eyewear among individuals.
- The 3D Eyewear may not operate correctly at the outside of the viewing range.

Note

- Design and Specifications are subject to change without notice. Mass and Dimensions shown are approximate.

5 Technical Descriptions

5.1. Specification of KEY for DTCP-IP, One-to-One, Widevine and Netflix

5.1.1. General information:

1. EEPROM (IC8902) for spare parts has the seed of KEY for each.
2. The final KEY data will be generated by Peaks IC (IC8000) when SELF CHECK was done and are stored in both Peaks IC (IC8000) and EEPROM (IC8902).
   Four KEY are not generated for all models.
   The necessary KEY are only generated and stored depend on the feature of models.

5.1.2. Replacement of ICs:

When Peaks IC (IC8000) is replaced, EEPROM (IC8902) should be also replaced with new one the same time.
When EEPROM (IC8902) is replaced, Peaks IC (IC8000) is not necessary to be replaced the same time.
After the replacement of IC, SELF CHECK should be done to generate the final KEY data.
How to SELF CHECK: While pressing [VOLUME (-)] button on the main unit, press [MENU] button on the remote control for more than 3 seconds.
TV will be forced to the factory shipment setting after this SELF CHECK.

5.1.3. Model and Keys:

Model No.	Keys			
	One-to-One (For USB Rec.)	DTCP-IP	Widevine	Netflix
TH-P50UT50D/G/K/M/P/S/V	None	None	Yes	Yes
TH-P50UT50A/Z	Yes	Yes	Yes	Yes

5.2. USB HDD Recording (A/Z only)

5.2.1. General information:

Digital TV programmes can be recorded in USB HDD.
A One-to-One key generated in A-board by SELF CHECK binds TV and USB-HDD for communication.
That key is only one key for them. If the key is difference, TV can not access USB-HDD.

Caution:

New key will be generated by following SELF CHECK and previous TV programmes recorded in USB HDD will not be viewed.
SELF CHECK: While pressing [VOLUME (-)] button on the main unit, press [MENU] button on the remote control for more than 3 seconds.

5.3. Panel-Type setting

Panel-Type setting is required after exchange the A-board.
A-board for spare parts is common use for different inch size in same series.
Go into Service Mode and confirm/select Panel-Type in OPTION to correct inch size.

6 Service Mode

6.1. How to enter into Service Mode

6.1.1. Purpose

After exchange parts, check and adjust the contents of adjustment mode.

While pressing [VOLUME (-)] button of the main unit, press [i] button of the remote control three times within 2 seconds.

Note:

Service Mode can not be entered when 3D signal input.
Input 2D signal to enter Service Mode.

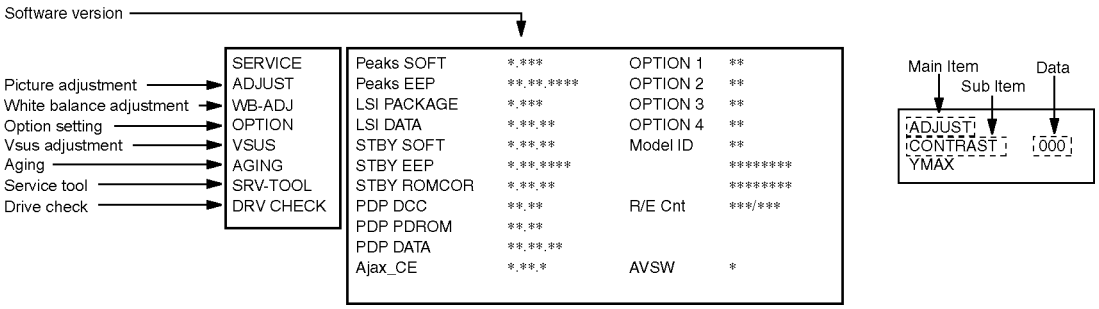

6.1.2. Key command

[1] button...Main items Selection in forward direction
[2] button...Main items Selection in reverse direction
[3] button...Sub items Selection in forward direction
[4] button...Sub items Selection in reverse direction
[RED] button...All Sub items Selection in reverse direction
[GREEN] button...All Sub items Selection in forward direction
[VOL] button...Value of sub items change in forward direction (+), in reverse direction (-)

6.1.3. How to exit

Switch off the power with the [POWER] button on the main unit or the [POWER] button on the remote control.

6.1.4. Contents of adjustment mode

- Value is shown as a hexadecimal number.
- Preset value differs depending on models.
- After entering the adjustment mode, take note of the value in each item before starting adjustment.

Main item	Sub item	Sample Data	Remark
ADJUST	CONTRAST	225	
	COLOR	36	
	TINT	00	
	SUB-BRT	800	
	H-POS	0	
	H-AMP	0	
	V-POS	0	
	V-AMP	0	
WB-ADJ	R-CUT	80	
	G-CUT	80	
	B-CUT	80	
	R-DRV	FF	
	G-DRV	F6	
	B-DRV	B9	
	ALL-CUT	80	
	ALL-DRV	FF	
OPTION	Panel-Type	50FHD	Factory Preset
	Boot	ROM	
	STBY-SET	00	
	EMERGENCY	ON	
	CLK MODE	00	
	CLOCK	000	
	Y/C Delay		
	OPT 1	10110000	
	OPT 2	11100110	
	OPT 3	00001001	
	OPT 4	00010000	
	EDID-CLK	MID	
	MIRROR	00 (See Option-Mirror)	
	AMR-SELECT	OFF	
VSUS		LOW	See Vsus selection
AGING	ALL WHITE		Built-in test patterns can be displayed.
	MIDDLE BLUE WITH MAGENTA OUTSIDE FRAME		
	MIDDLE STEP GREEN		
	MIDDLE STEP RED		
	LOW STEP WHITE		
	ALL BLUE		
	ALL GREEN		
	ALL RED		
	WHITE DIAGONAL STRIPE		
	RED DIAGONAL STRIPE		
	GREEN DIAGONAL STRIPE		
	BLUE DIAGONAL STRIPE		
	A-ZONE & B-ZONE		
	1% WINDOW		
	COLOR BAR		
	9 POINTS BRIGHT MEASURE		
	2 DOT OUTSIDE FRAME		
	DOUBLE FIXED 1% WINDOW		
	VERTICAL LINE SCROLL		
	ON/OFF		
	R/G/B/W ROTATION WITH COUNT DISPLAY		
	HALF FIXED ALL WHITE		
	ALL WHITE WITH COUNT DISPLAY		
SRV-TOOL		00	See Service tool mode
DRV CHECK	USBHDD CHECK	00	See DRV Check-USBHDD Check

6.2. Option - Mirror

Picture can be reversed left and right or up and down.
00 : Default (Normal picture is displayed)
01 : Picture is reversed left and right.
02 : Picture is reversed up and down.

00

01

02

Hint : If the defective symptom (e.g. Vertical bar or Horizontal bar) is moved by selection of this mirror, the possible cause is in A-board.

6.3. Service tool mode

6.3.1. How to access

1. Select [SRV-TOOL] in Service Mode.
2. Press [OK] button on the remote control.

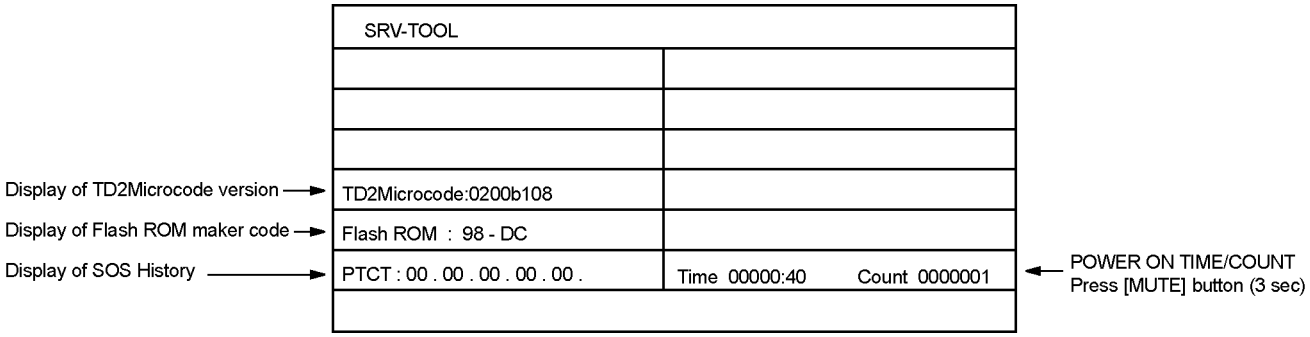

6.3.2. Display of SOS History

SOS History (Number of LED blinking) indication.
From left side; Last SOS, before Last, three occurrence before, 2nd occurrence after shipment, 1st occurrence after shipment.
This indication except 2nd and 1st occurrence after shipment will be cleared by [Self-check indication and forced to factory shipment setting].

6.3.3. POWER ON TIME/COUNT

Note : To display TIME/COUNT menu, highlight position, then press MUTE for 3 sec.
Time : Cumulative power on time, indicated hour : minute by decimal
Count : Number of ON times by decimal
Note : This indication will not be cleared by either of the self-checks or any other command.

6.3.4. Exit

1. Disconnect the AC cord from wall outlet.

6.4. DRV Check - USB HDD Check

1. Select [DRV Check - USBHDD Check] in Service Mode.
2. Press [OK] button on the remote control for more than 3 seconds.

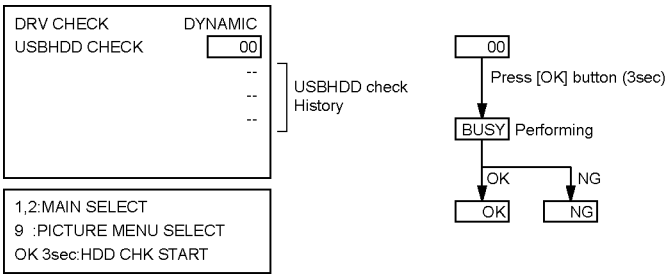

6.5. Hotel mode

1. Purpose
   Restrict a function for hotels.
2. Access command to the Hotel mode setup menu
   In order to display the Hotel mode setup menu:
   While pressing [VOLUME (-)] button of the main unit, press [AV] button of the remote control three times within 2 seconds.

   Then, the Hotel mode setup menu is displayed.

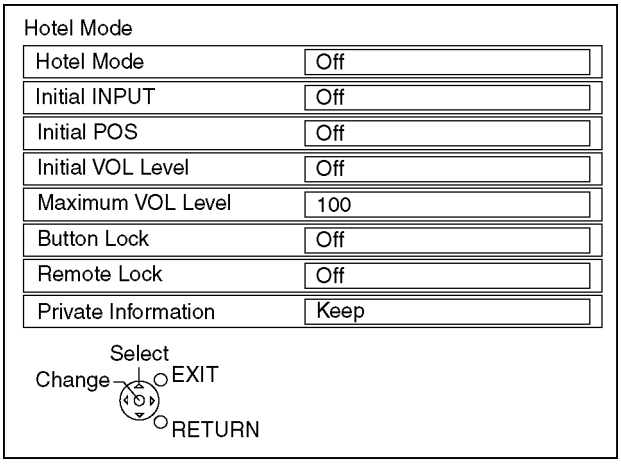

3. To exit the Hotel mode setup menu
   Disconnect AC power cord from wall outlet.
4. Explain the Hotel mode setup menu

Item	Function
Hotel Mode	Select hotel mode On/Off
Initial INPUT	Select input signal modes. Set the input, when each time power is switched on. Selection : Off,TV,AV1,AV2,PC,HDMI1,HDMI2 • Off: give priority to a last memory.
Initial POS	Select programme number. Selection : Off/0 to 99 • Off: give priority to a last memory
Initial VOL Level	Adjust the volume when each time power is switched on. Selection/Range : Off/0 to 100 • Off: give priority to a last memory
Maximum VOL Level	Adjust maximum volume. Range : 0 to 100
Button Lock	Select local key conditions. Selection : Off/SETUP/MENU/ALL • Off: altogether valid • SETUP: only F-key is invalid (Tuning guide (menu) can not be selected.) • MENU: only F-key is invalid (only Volume/Mute can be selected.) • ALL: altogether invalid.
Remote Lock	Select remote control key conditions. Selection : Off/SETUP/MENU • Off: altogether valid • SETUP: only Setup menu is invalid • MENU: Picture/Sound/Setup menu are invalid
Private Information	Select private information for VIERA Cast is Keep or Reset if Hotel mode is set to [On] when TV power on. Selection : Keep/Reset • Keep: private information for VIERA Cast is keep • Reset: private information for VIERA Cast is reset

6.6. Data Copy by SD Card

6.6.1. Purpose

(a) Board replacement (Copy the data when exchanging A-board):

When exchanging A-board, the data in original A-board can be copied to SD card and then copy to new A-board.

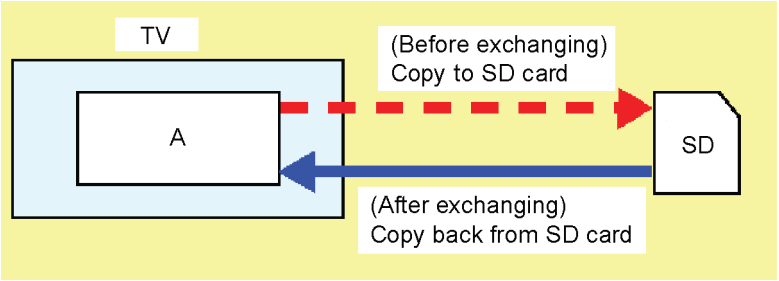

Following data can be copied.
User setting data
(incl. Hotel mode setting data)
Channel scan data
Adjustment and factory preset data

(b) Hotel (Copy the data when installing a number of units in hotel or any facility):

When installing a number of units in hotel or any facility, the data in master TV can be copied to SD card and then copy to other TVs.

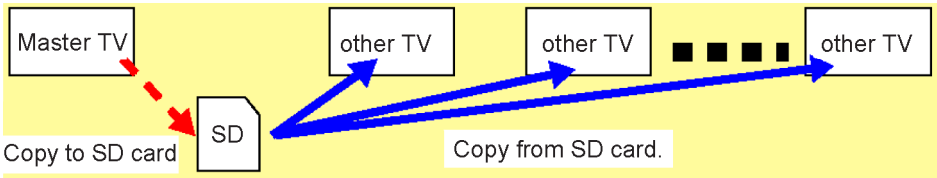

Following data can be copied.
User setting data
(incl. Hotel mode setting data)
Channel scan data

6.6.2. Preparation

Make pwd file as startup file for (a) or (b) in a empty SD card.

1. Insert a empty SD card to your PC.
2. Right-click a blank area in a SD card window, point to New, and then click text document. A new file is created by default (New Text Document.txt).
3. Right-click the new text document that you just created and select rename, and then change the name and extension of the file to the following file name for (a) or (b) and press ENTER.

File name:

(a) For Board replacement : boardreplace.pwd
(b) For Hotel : hotel.pwd

Note:

Please make only one file to prevent the operation error.

No any other file should not be in SD card.

6.6.3. Data copy from TV set to SD Card

1. Turn on the TV set.
2. Insert SD card with a startup file (pwd file) to SD slot.
   On-screen Display will be appeared according to the startup file automatically.
3. Input a following password for (a) or (b) by using remote control.
   (a) For Board replacement : 2770
   (b) For Hotel : 4850
   Data will be copied from TV set to SD card.
   It takes around 2 to 6 minutes maximum for copying.
4. After the completion of copying to SD card, remove SD card from TV set.
5. Turn off the TV set.

Note:

Following new folder will be created in SD card for data from TV set.
(a) For Board replacement : user_setup
(b) For Hotel : hotel

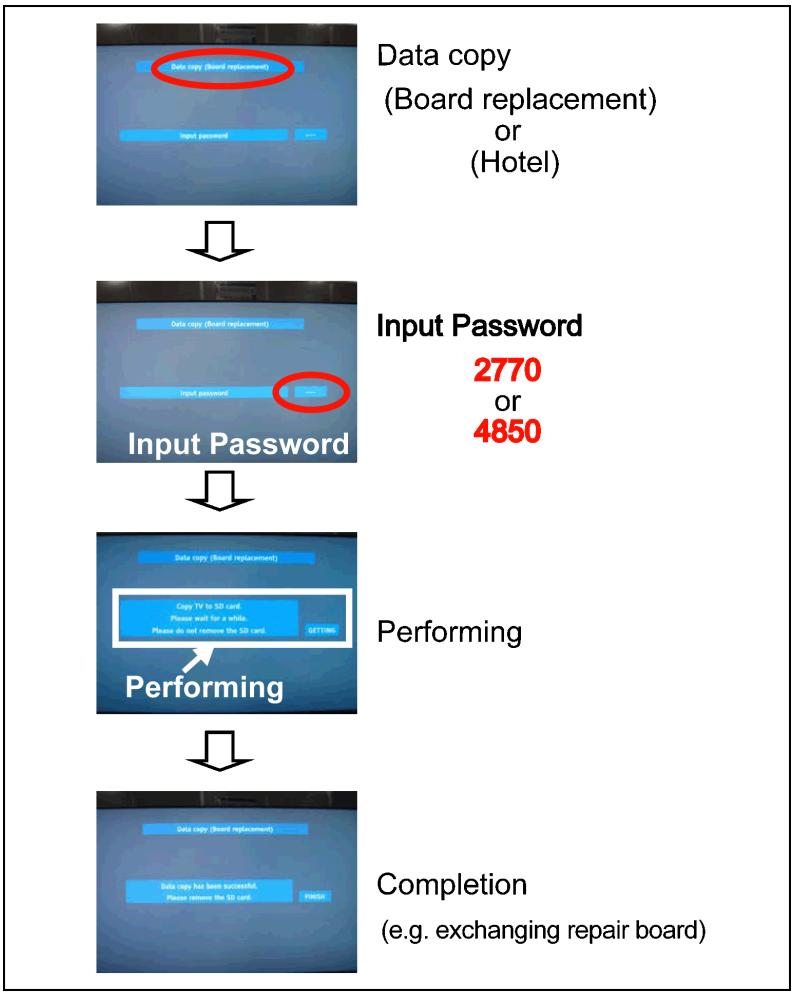

6.6.4. Data copy from SD Card to TV set

1. Turn on the TV set.
2. Insert SD card with Data to SD slot.
   On-screen Display will be appeared according to the Data folder automatically.
3. Input a following password for (a) or (b) by using remote control.
   (a) For Board replacement : 2771
   (b) For Hotel : 4851
   Data will be copied from SD card to TV set.
4. After the completion of copying to SD card, remove SD card from TV set.
   (a) For Board replacement : Data will be deleted after copying (Limited one copy).
   (b) For Hotel : Data will not be deleted and can be used for other TVs.
5. Turn off the TV set.

Note:

1. Depending on the failure of boards, function of Data copy for board replacement does not work.
2. This function can be effective among the same model numbers.

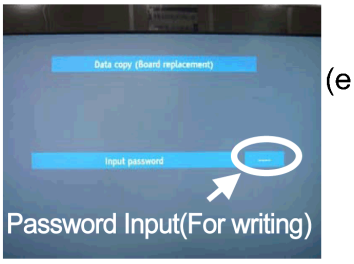

(e.g. For exchanging repair board)

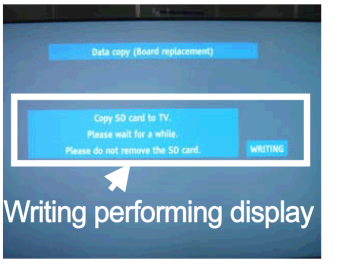

Performing

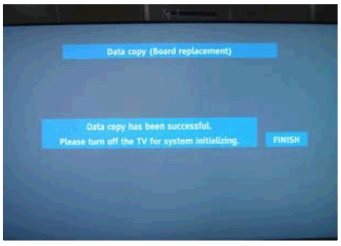

Completion

7 Troubleshooting Guide

Use the self-check function to test the unit.

1. Checking the IIC bus lines
2. Power LED Blinking timing

7.1. Check of the IIC bus lines

7.1.1. How to access

7.1.1.1. Self-check indication only:

Produce TV reception screen, and while pressing [VOLUME (-)] button on the main unit, press [OK] button on the remote control for more than 3 seconds.

7.1.1.2. Self-check indication and forced to factory shipment setting:

Caution:

New key will be generated and previous TV programmes recorded in USB HDD will not be viewed. (See USB HDD Recording) (A/Z only)

Produce TV reception screen, and while pressing [VOLUME (-)] button on the main unit, press [MENU] button on the remote control for more than 3 seconds.

7.1.2. Screen display

```
50FHD                    Panasonic  2012PDP
SET
                         SELF CHECK COMPLETE
                         SYS SELECT : Asia/M.East

TUN      OK      PEAKS-SOFT        *.***      SUM            ****
STBY     OK      PEAKS-EEP      **.**.****
MEM1     OK      LSI-PACKAGE         *.***    MODEL ID          **
MEM2     OK      LSI-RELEASE           *.**                 ********
PANEL    OK      STBY-SOFT         *.**.**                  ********
TEMP     OK      STBY-EEP       *.**.****
LAN      OK      STBY-ROMCORR      *.**.**
ID2      OK      PDP-DCC             **.**
BT       OK      PDP-PDROM           **.**
                 PDP-DATA        **.**.**
```

7.1.3. Check Point

Confirm the following parts if NG was displayed.

DISPLAY	Check Ref. No.	Description	Check Point
TUN	TU6705	TUNER	A-BOARD
STBY	IC8000	PEAKS-LD4(STM)	A-BOARD
MEM1	IC8902	PEAKS EEPROM	A-BOARD
MEM2	IC8900	NAND FLASH	A-BOARD
PANEL	IC9300	PD6H	A-BOARD
TEMP	IC2001	TEMP SENSOR	A-BOARD
LAN	IC8650	ETHERPHY	A-BOARD
ID2			A-BOARD
BT	IC8000, A50	BLUETOOTH	A-BOARD/BLUETOOTH

7.1.4. Exit

Disconnect the AC cord from wall outlet or switch off the power with [Power] button on the main unit.

7.2. Power LED Blinking timing chart

1. Subject
   Information of LED Flashing timing chart.
2. Contents
   When an abnormality has occurred the unit, the protection circuit operates and reset to the stand by mode. At this time, the defective block can be identified by the number of blinks of the Power LED on the front panel of the unit.

Blinking Times	Contents	Check point
1	Panel information SOS PD Start SOS	-
2	P+15V SOS	A-Board P-Board
3	IROM BOOT PROGRAM SOS	A-Board P-Board
4	Power SOS	P-Board
6	Driver SOS1 (SC Energy recovery circuit) (A-SC FPC DET)	SC-Board A-SC FPC
7	Driver SOS2 (SU/SD Connector DET) (SU/SD Scan and Logic IC)	SU-Board SD-Board *
8	Driver SOS3 (SS FPC DET) (SS Energy recovery circuit)	SS-Board SS FPC
9	Discharge Control SOS	A-Board
10	Sub 3.3V SOS Tuner power SOS BE SOS	A-Board SC-Board SS-Board P-Board
12	Sound SOS	A-Board Speaker Woofer
13	Emergency SOS	A-Board
20	2nd BOOT PROGRAM SOS (Watchdog timer over flow)	A-Board
21	2nd BOOT PROGRAM SOS (System error)	A-Board
22	2nd BOOT PROGRAM SOS (Main system bus freeze)	A-Board
23	2nd BOOT PROGRAM SOS (Accidental interrupt signal)	A-Board
24	2nd BOOT PROGRAM SOS (NAND Flash memory data transfer error finish)	A-Board
25	2nd BOOT PROGRAM SOS (Unsupported NAND Flash memory)	A-Board

*Use SC jig to isolate the board.

7.3. No Power

First check point

There are following 3 states of No Power indication by power LED.

1. No lit
2. Green is lit then turns red blinking a few seconds later. (See Power LED Blinking timing chart)
3. Only red is lit.

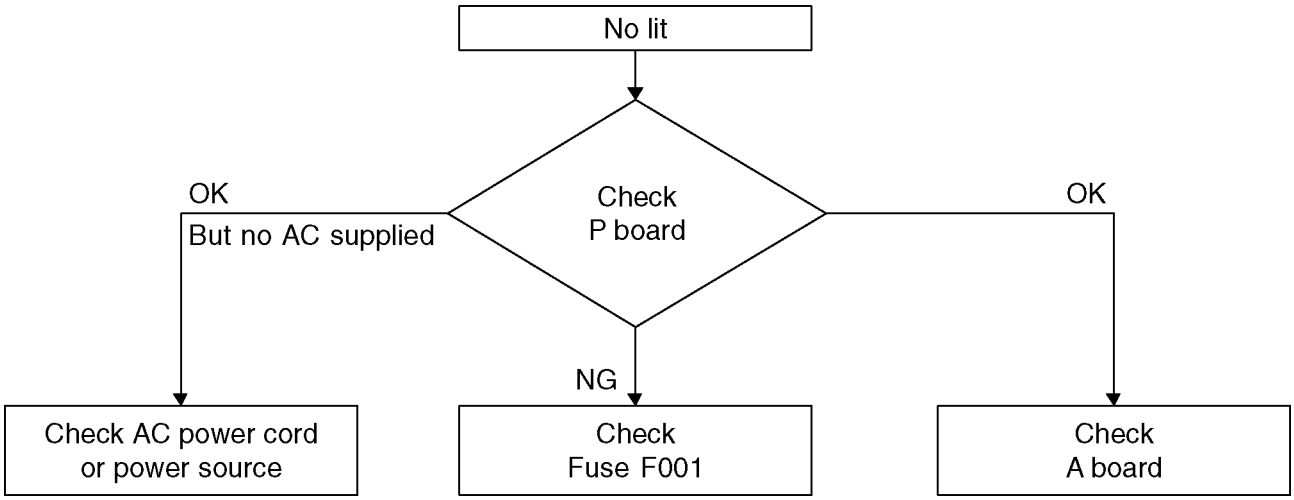

7.4. No Picture

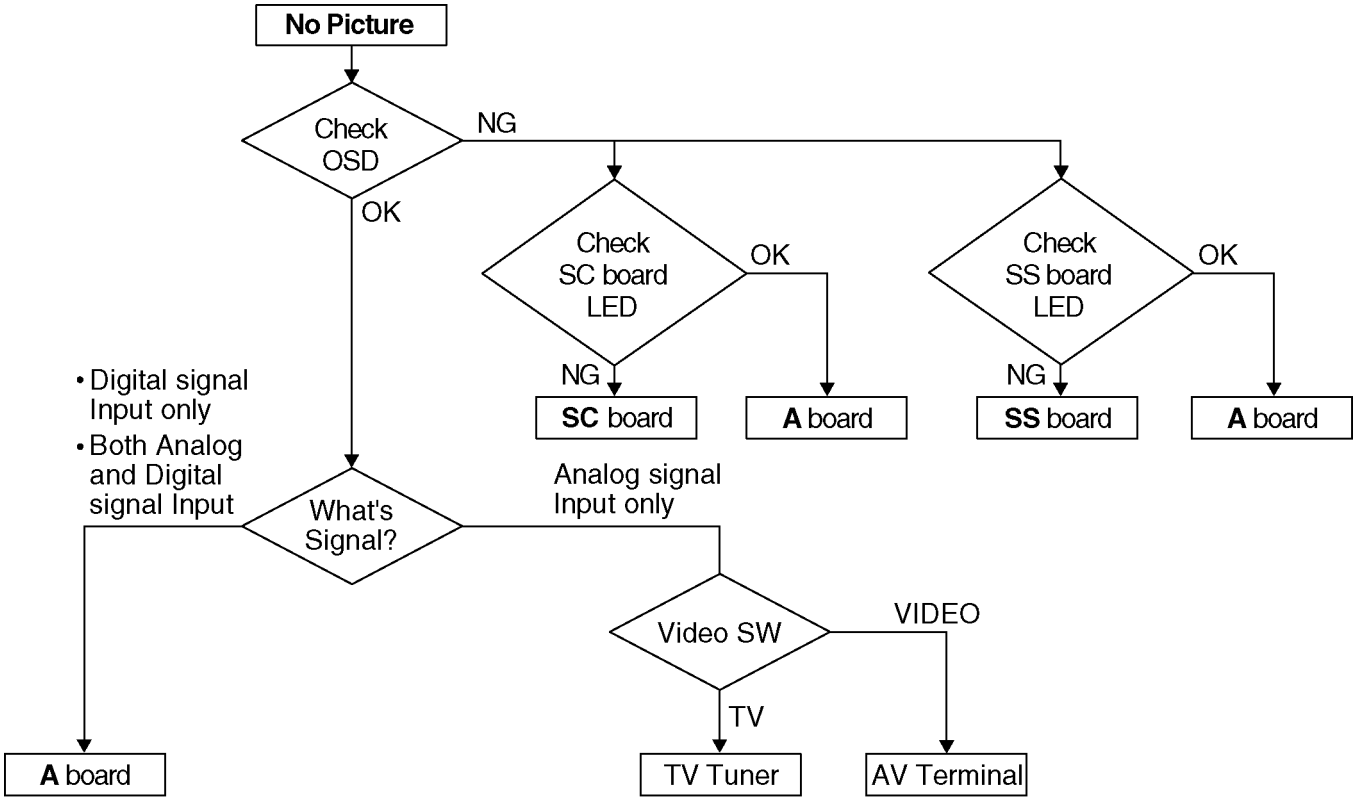

Drive circuits LED indicator

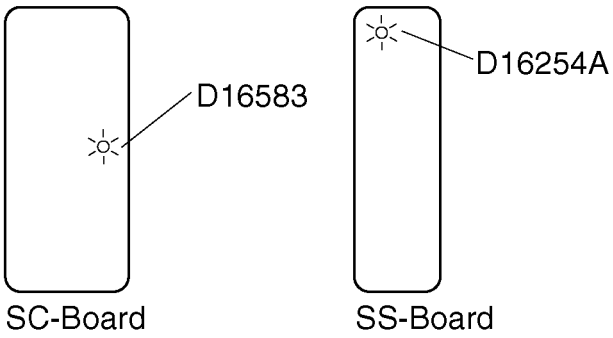

7.5. Local screen failure

Plasma display may have local area failure on the screen. Fig-1 is the possible defect P.C.B. for each local area.

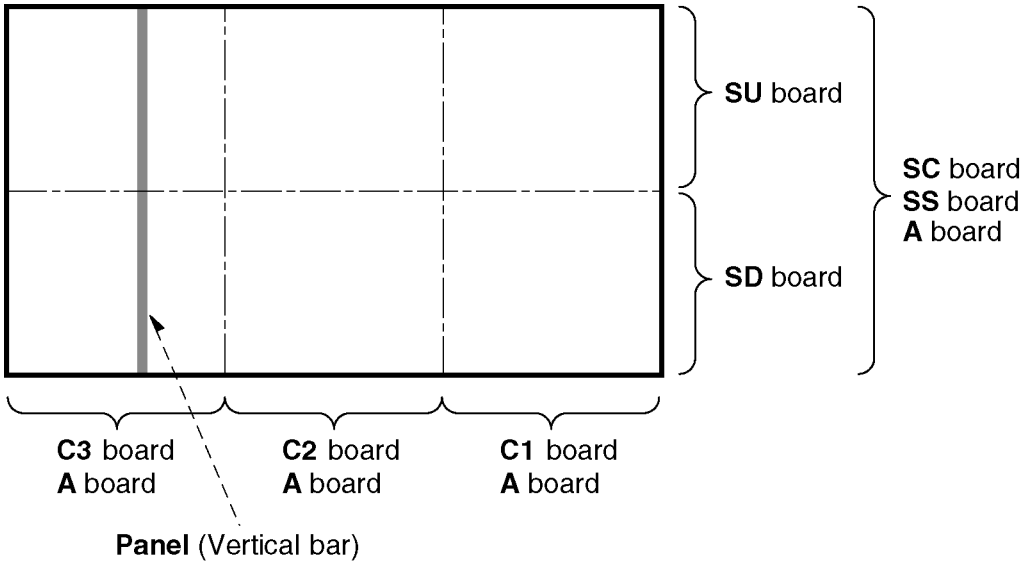

<Local screen failure chart>

Fig-1

8 Service Fixture & Tools

8.1. SC jig

Purpose:
To find the failure board (SC or SU/SD) when the power LED is blinking 7 times.
SC jig:
Jumper connector to connect to SC50 connector on SC board
Part number:
TZSC09187
How to use:
Caution: Remove SC jig from SC board after inspection.

1. Remove all connector between SC board and SU/SD board to isolate SC board from both SU and SD board electrically.
   Note: The board will be damaged if all connector is not removed (for example; remove connector only for SU board and stay connecting with SD board. The board will be damaged.)
2. Connect SC jig to connector SC50 at left bottom side of SC board
3. Turn on the TV/Display Unit and confirm the power LED blinking.
   LED blinking: Possible cause of failure is in SC board
   No LED blinking (Lighting or no lighting): Possible cause of failure is in SU or SD board
4. After inspection, turn off the TV/Display Unit and wait a few minutes to discharge.
5. Remove SC jig from SC board.

Remark: This SC jig can be used for all 2012 Plasma TV and Plasma Display.

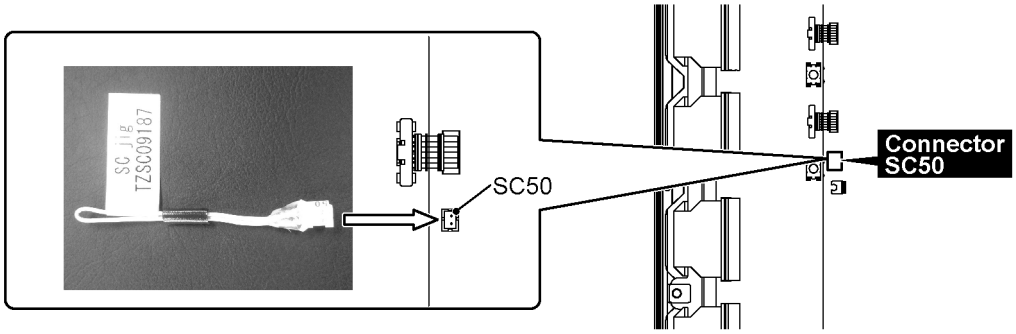

9 Disassembly and Assembly Instructions

9.1. Disassembly Flow Chart for the Unit

This is a disassembly chart.
When assembling, perform this chart conversely.

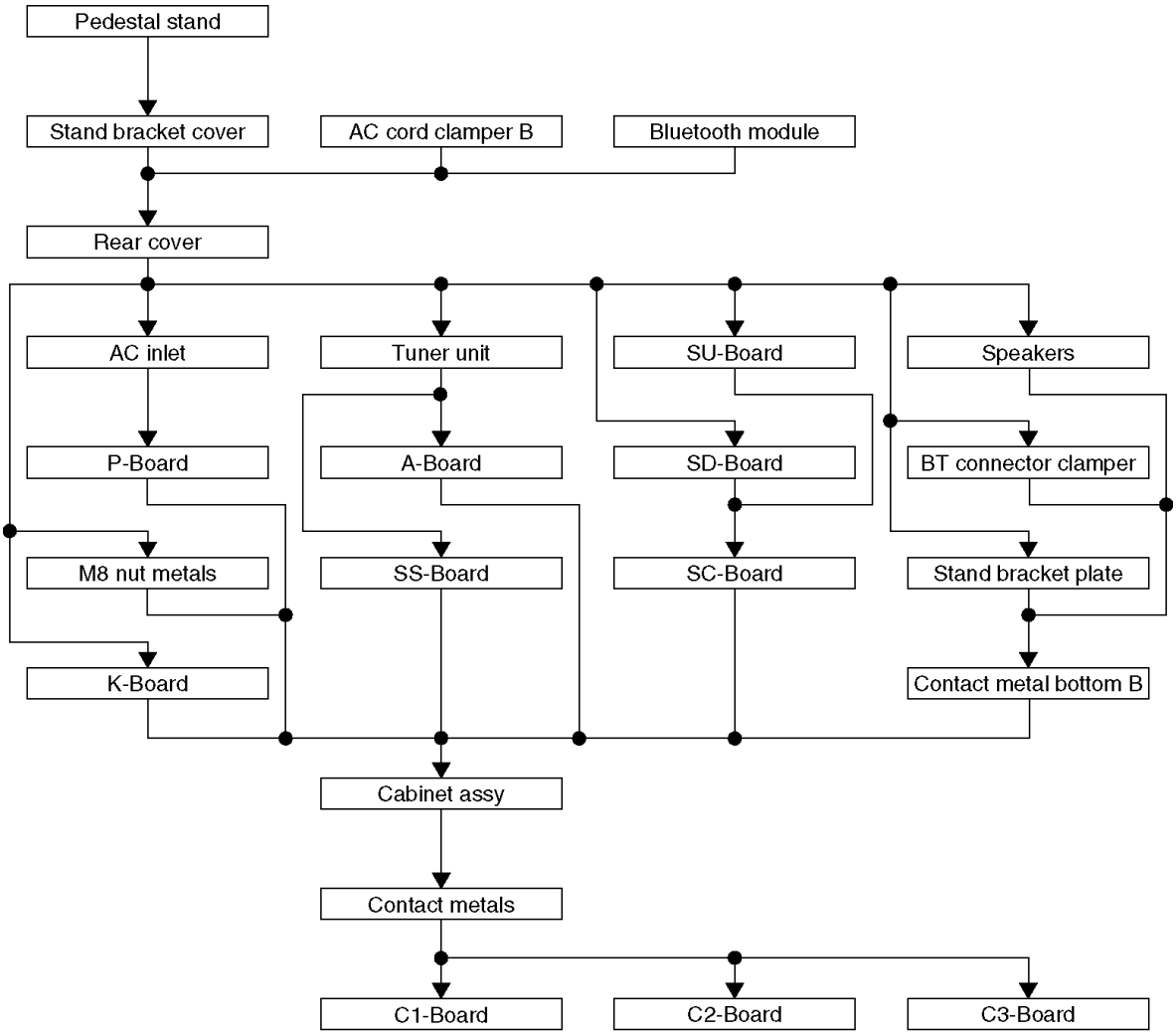

9.2. Disassembly Procedure for the Unit

9.2.1. Remove the Pedestal stand

1. Remove the Plasma panel section from the servicing stand and lay on a flat surface such as a table (covered by a soft cloth) with the Plasma panel surface facing downward.
2. Remove the screws (×4 ➡).
3. Slide the Pedestal stand to the downside and remove the Pedestal stand.

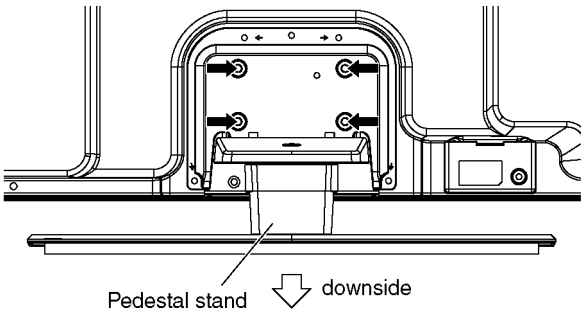

9.2.2. Remove the Stand bracket cover

1. Remove the screws (×4 ➡) and remove the Stand bracket cover.

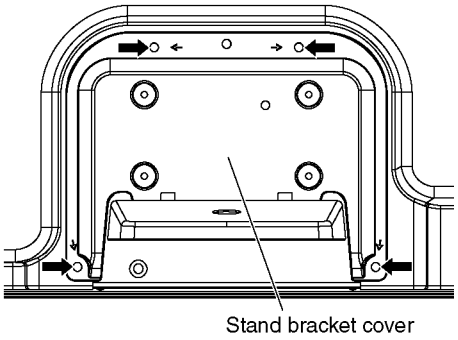

9.2.3. Remove the AC cord clamper B

1. Remove the screws (×2 ➡) and remove the AC cord clamper B.

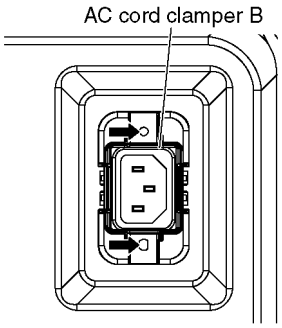

9.2.4. Remove the Bluetooth module

1. Remove the screw (×1 ➡) and remove the Bluetooth module.

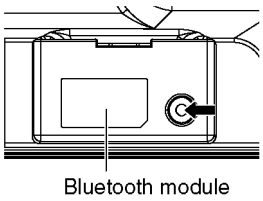

9.2.5. Remove the Rear cover

1. Remove the screws (×12 ➡, ×10 ⇨, ×2 ➡).
2. Remove the M8 caps (×4 ➡).
3. Remove the Rear cover.

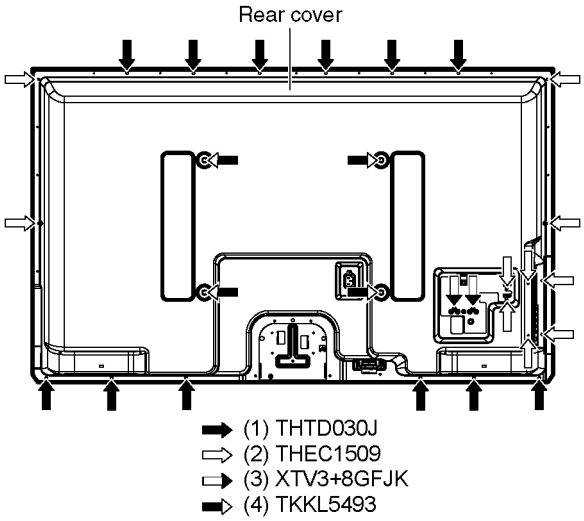

9.2.6. Remove the AC inlet

Caution:

To remove AC inlet wait 1 minute after power was off for discharge from electrolysis capacitors.

1. Disconnect the connector (P9).
2. Remove the screws (×1 ➡, ×1 ⇨) and remove the AC inlet.

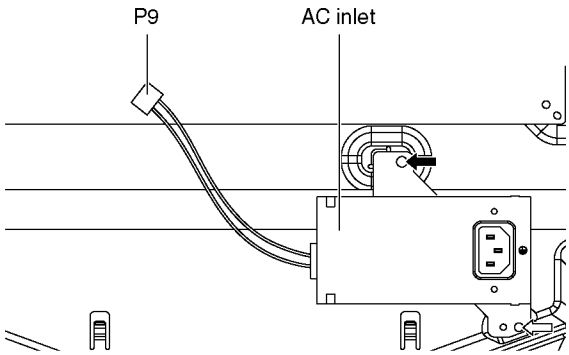

9.2.7. Remove the P-Board

Caution:

To remove P.C.B. wait 1 minute after power was off for discharge from electrolysis capacitors.

1. Unlock the cable clampers and the tapes to free the cable.
2. Disconnect the connectors (P2, P6, P11 and P35).
3. Remove the screws (×5 ➡) and remove the P-Board.

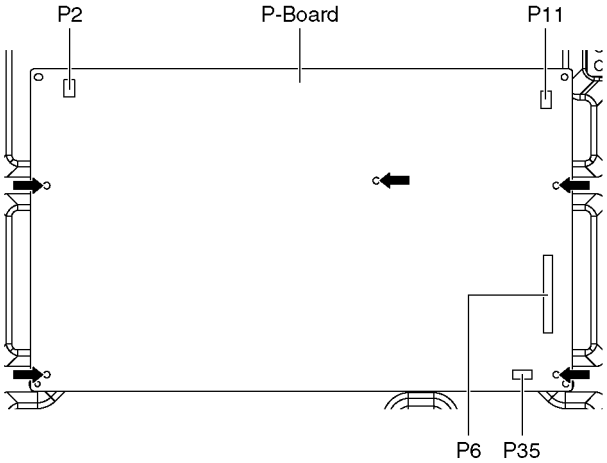

9.2.8. Remove the Tuner unit

1. Unlock the cable clampers and the tapes to free the cables.
2. Disconnect the connectors (A1, A6, A12 and A50).
3. Disconnect the flexible cables (A20, A31, A32 and A33).
4. Remove the screws (×4 ➡) and remove the Tuner unit.

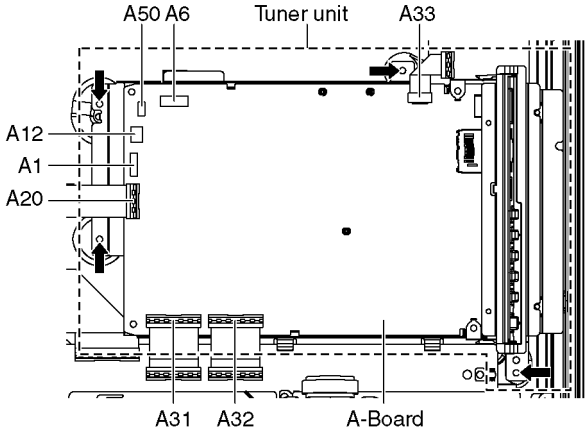

9.2.9. Remove the A-Board

1. Remove the screws (×4 ➡).
2. Remove the claws (×2 ⇨).
3. Remove the Side terminal cover and the Side shield metal.
4. Remove the A-Board.

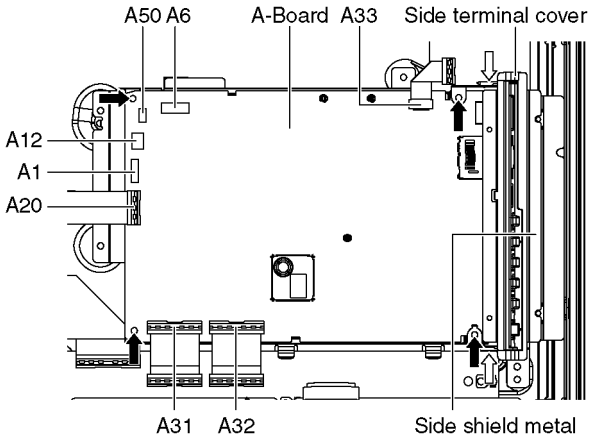

9.2.10. Remove the Speakers

1. Unlock the cable clampers and the tapes to free the cables.
2. Disconnect the Speaker terminal.
3. Remove the screws (×2 ➡ each) and remove the Speakers (L, R).

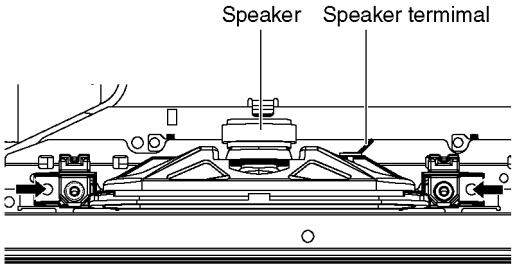

9.2.11. Remove the SU-Board

1. Disconnect the flexible cables (SU1, SU2, SU3, SU4 and SU5) connected to the SU-Board.
2. Disconnect the flexible cable (SU11-SD11) and the bridge connector (SC41-SU41).
3. Remove the screws (×2 ➡, ×2 ⇨) and remove the SU-Board.

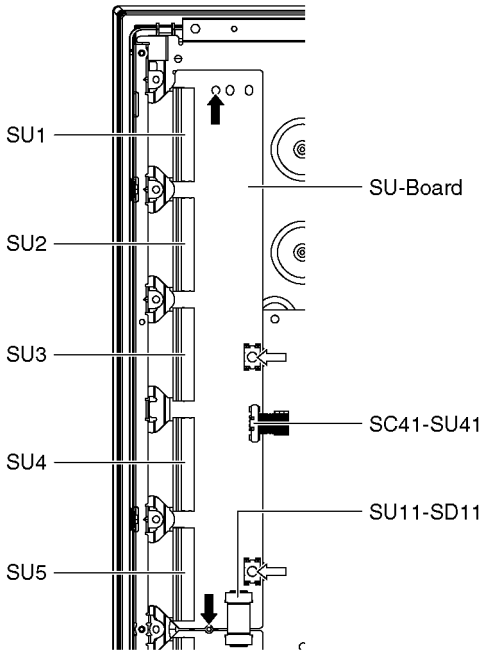

9.2.12. Remove the SD-Board

1. Disconnect the flexible cables (SD1, SD2, SD3, SD4 and SD5) connected to the SD-Board.
2. Disconnect the flexible cable (SU11-SD11) and the bridge connectors (SC42-SD42 and SC46-SD46).
3. Remove the screws (×2 ➡, ×2 ⇨) and remove the SD-Board.

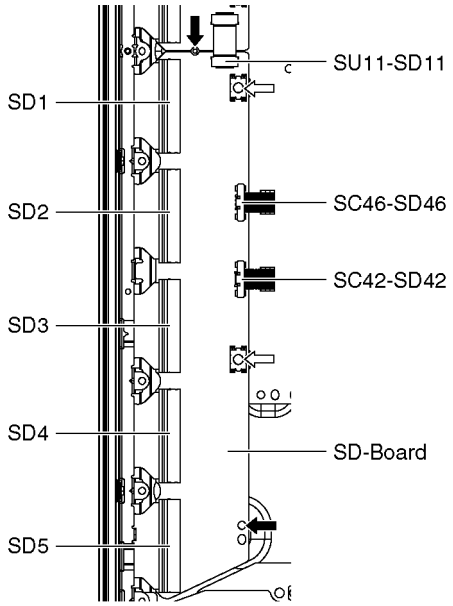

9.2.13. Remove the SC-Board

1. Disconnect the connector (SC2).
2. Disconnect the flexible cable (SC20).
3. Remove the screws (×6 ➡) and remove the SC-Board.

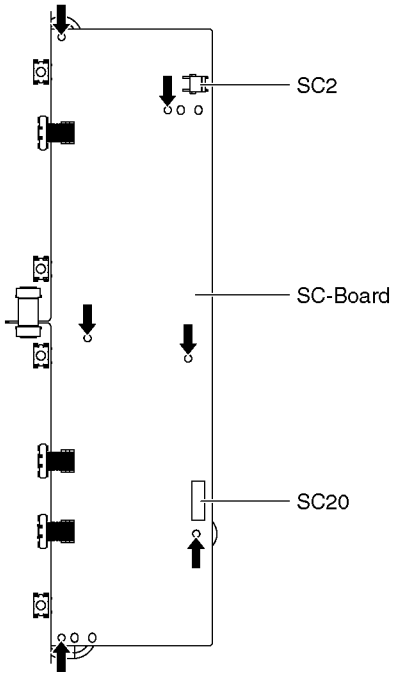

9.2.14. Remove the SS-Board

1. Disconnect the connector (SS11).
2. Disconnect the flexible cable (SS33).
3. Disconnect the flexible cables (SS52, SS54, SS55 and SS57).
4. Remove the screws (×5 ➡) and remove the SS-Board.

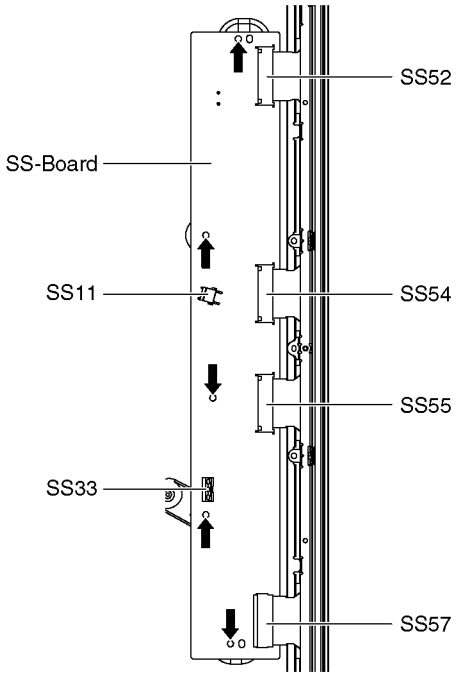

9.2.15. Remove the BT connector clamper

1. Unlock the cable clampers and the tapes to free the cables.
2. Remove the claws (×2 ➡) and remove the BT cable.
3. Disconnect the connector (K1) and remove the A1-K1 cable.
4. Remove the claws (×2 ⇨) and remove the BT connector clamper.

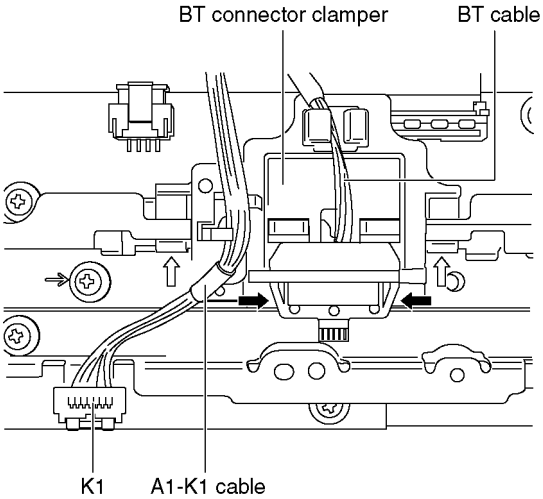

9.2.16. Remove the Stand bracket plate

1. Remove the Stand bracket fastening screws (×4 ➡, ×2 ⇨, ×2 ➡) and remove the Stand bracket plate.

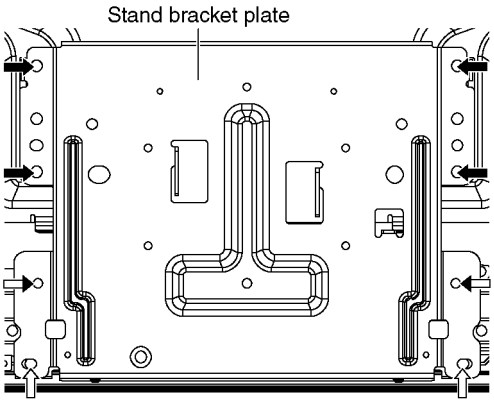

9.2.17. Remove the M8 nut metals

1. Remove the screw (×1 ➡ each) and remove the M8 nut metals.

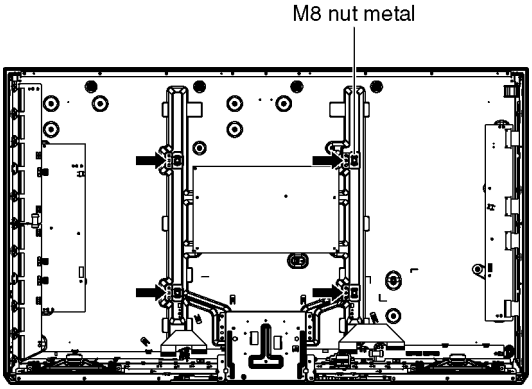

9.2.18. Remove the K-Board

1. Remove the screw (×1 ➡).
2. Disconnect the connector (K1) and remove the K-Board from the LED panel.

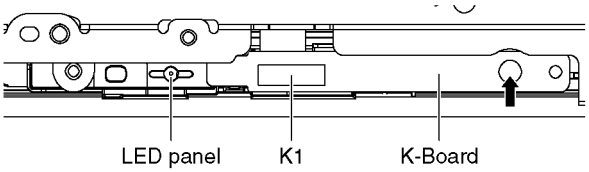

9.2.19. Remove the Contact metal bottom B

1. Remove the screws (×6 ➡, ×1 ⇨).
2. Remove the Contact metal bottom B.

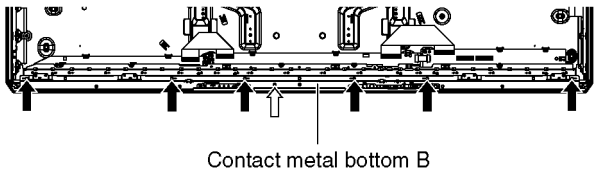

9.2.20. Remove the Cabinet assy from the Plasma panel section

1. Place the Cabinet assy on a flat surface of a table (covered by a soft cloth) and a cushion.

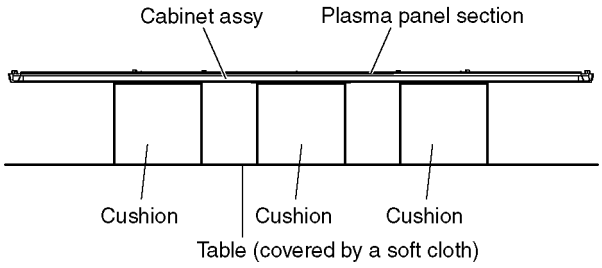

2. Remove the screws (×8 ➡).

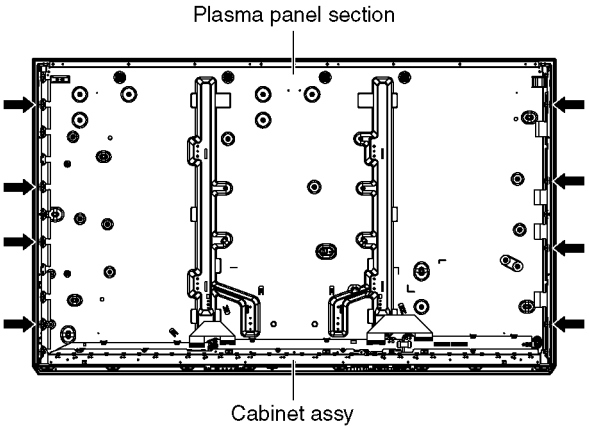

3. Remove the Cabinet assy from the Plasma panel section.

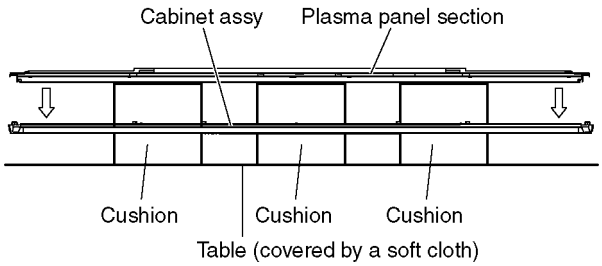

9.2.21. Remove the Contact metals

1. Remove the screws (×6 ➡).
2. Remove the Contact metal side (L, R).
3. Remove the screws (×15 ⇨).
4. Remove the Contact metal bottom A.

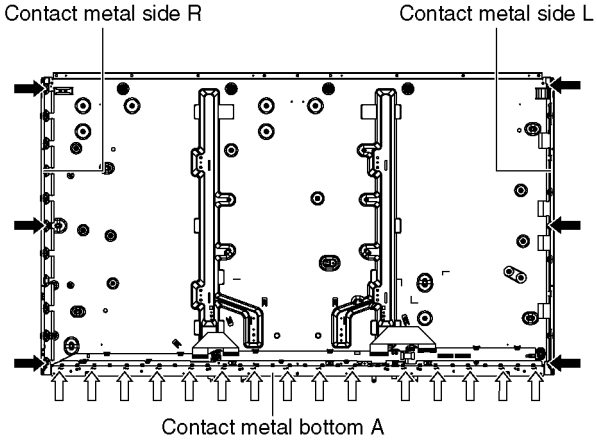

9.2.22. Remove the C1-Board

1. Disconnect the flexible cables (CB1, CB2, CB3, CB4 and CB5).
2. Disconnect the flexible cable (C10).
3. Remove the screws (×3 ➡) and remove the C1-Board.

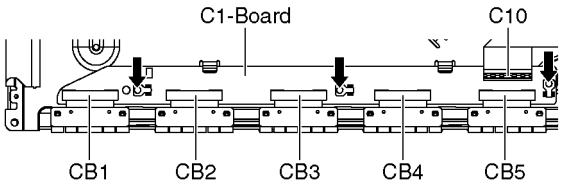

9.2.23. Remove the C2-Board

1. Disconnect the flexible cables (CB6, CB7, CB8, CB9, CB10 and CB11).
2. Disconnect the flexible cables (C20, C26 and C27).
3. Disconnect the connector (C25).
4. Remove the screws (×4 ➡) and remove the C2-Board.

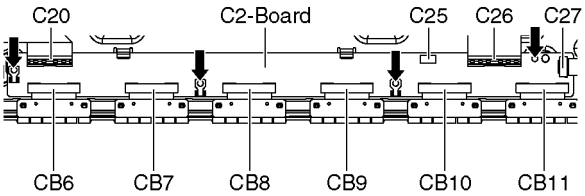

9.2.24. Remove the C3-Board

1. Disconnect the flexible cables (CB12, CB13, CB14 and CB15).
2. Disconnect the flexible cables (C31, C32, C36 and C37).
3. Remove the screws (×3 ➡) and remove the C3-Board.

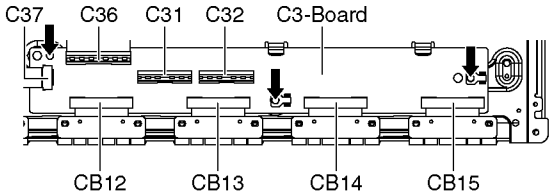

9.2.25. Replace the Plasma panel

Caution:

Place the Plasma panel on a flat surface of a table (covered by a soft cloth) and a cushion.

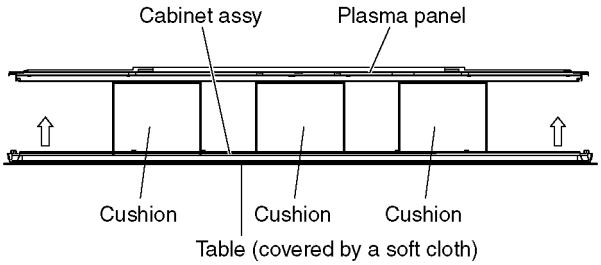

A new Plasma panel itself without Contact metals is fragile. To avoid the damage to new Plasma panel, carry a new Plasma panel taking hold of the Contact metals.

1. Place a carton box packed a new Plasma panel on the flat surface of the work bench.
2. Open a box and without taking a new Plasma panel.
3. Attach the Cabinet assy and each P.C.Board and so on, to the new Plasma panel.

10 Measurements and Adjustments

10.1. Adjustment

10.1.1. Vsus selection

Caution:

When Plasma panel or A-board is replaced, Vsus should be set to LOW or HIGH.

Procedure

1. Go into main item [VSUS] in Service Mode. LOW or HIGH will be displayed.
2. Press [OK] button to go to TEST stage.
   White pattern without On-Screen Display will be displayed during TEST and CONF stage. Press [5] button to display the On-Screen Display.
3. Press [VOL (-)] button to set to LOW.
4. In LOW setting
   a. If no several dead pixel is visible remarkably in white pattern, press [3] button to go to CONF stage.
   b. If the several dead pixels are visible remarkably in white pattern, Set to HIGH by press [VOL (+)] button. Press [3] button to go to CONF stage if the symptom is improved.
5. Press [OK] button in CONF stage to store LOW or HIGH.
6. Exit Service Mode by pressing [Power] button.

Notes:

Do not overwrite because data is written in Peaks-EEPROM after executing adjustment of V-SUS Voltage.

Vsus selection in Service mode

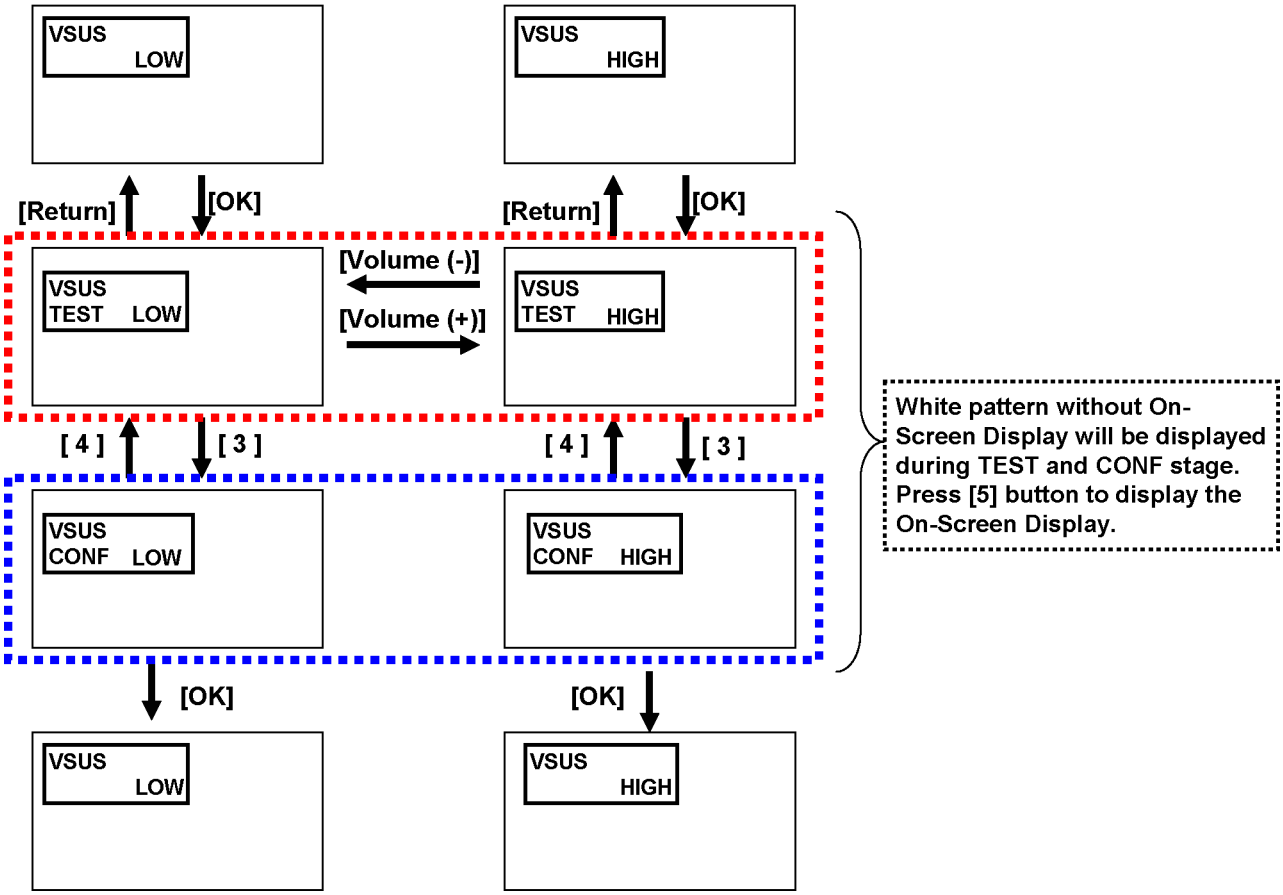

10.1.2. White balance adjustment

Name of measuring instrument	Remarks
Color analyzer (Minolta CS-2000 or equivalent)	
Procedure	**Remarks**

1. Enter the Service mode.
2. Receive the Analog-RF (except for no signal) or set CVBS/YUV/HDMI (no signal is available).
3. Select [WB-ADJ] by using [1] and [2] key in the remote controller.
4. Check that the colour balance and the viewing mode is the values written in table1 and 2.
5. [INNER PATTERN] is displayed by using [5] key by using [5] key in the remote controller.
6. Select [G-CUTOFF] by using the [3] and [4] key in the remote controller, and set the value to [80] by using the volume [+] and [-] key.
   Also, [B-CUTOFF] and [R-CUTOFF] set to [80]
7. Set [G-DRIVE] value to the initial data (ex. D0).
8. Set the color analyzer and adjust color point to the values written in table1 by using [B-DRIVE] and [R-DRIVE]
9. Increase RGB-DRIVE value so that the maximum drive value of one of R-DRIVE or G-DRIVE or B-DRIVE should become [FF]
   ([ALL-DRIVE] set to [FF].)

Table 1 : White Balance Target value

COOL		NORMAL		WARM	
x	y	x	y	x	y
0.267	0.269	0.288	0.296	0.313	0.326

Table2 : Setting of Viewing Mode

Colour Balance	Viewing Mode
Cool	Dynamic
Normal	Dynamic
Warm	Cinema

11 Block Diagram

11.1. Main Block Diagram

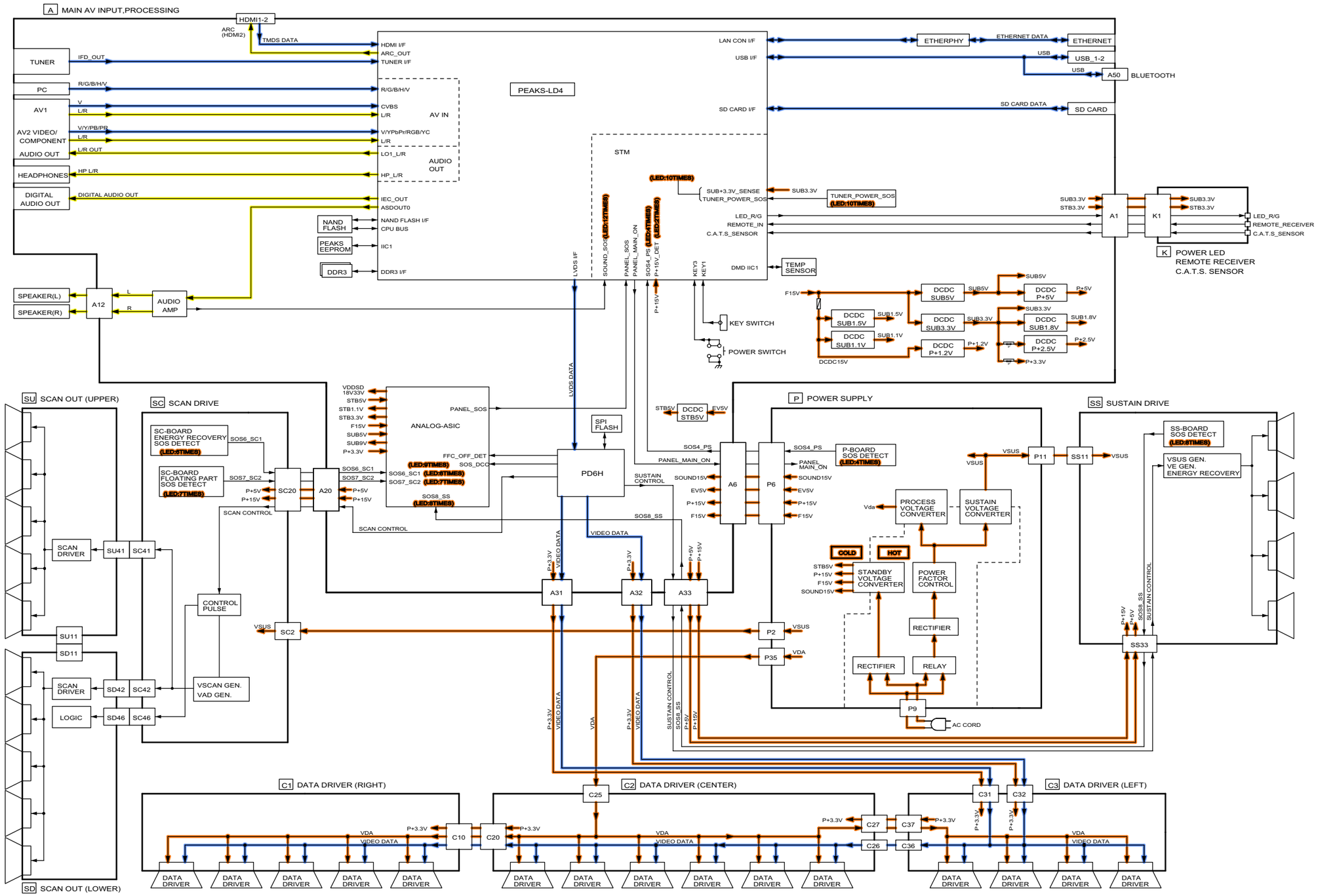

11.2. Block (1/4) Diagram

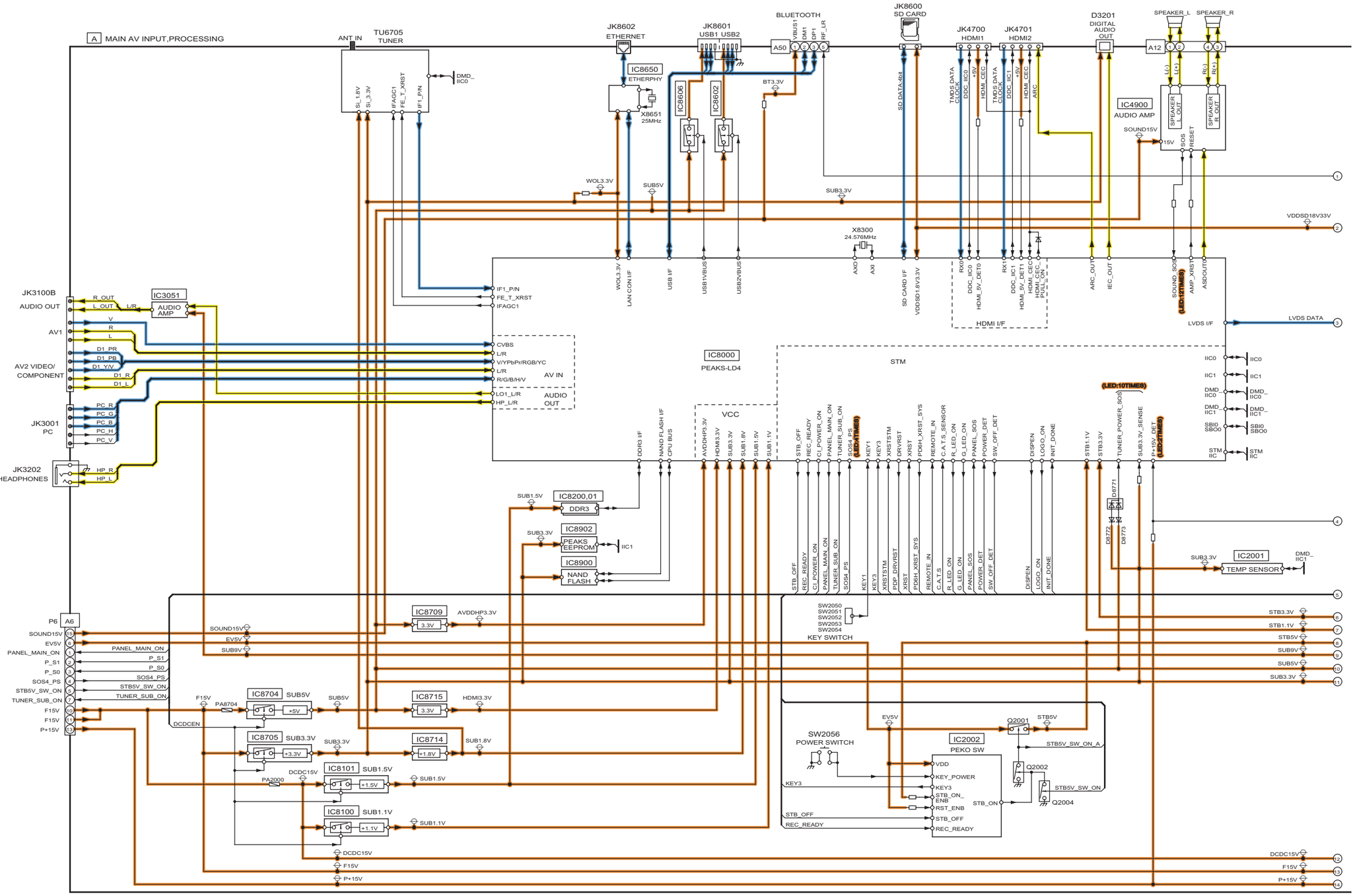

11.3. Block (2/4) Diagram

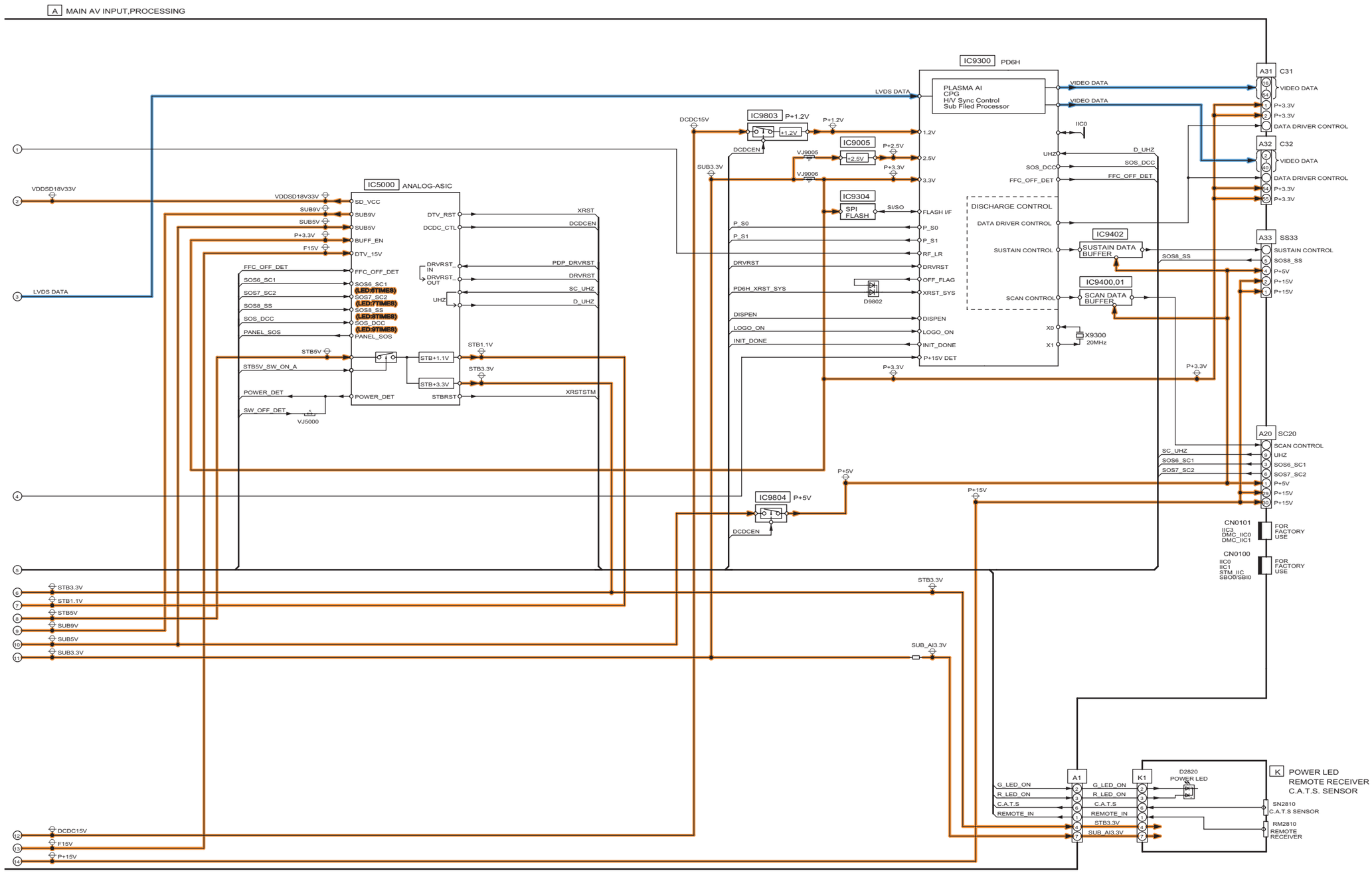

11.4. Block (3/4) Diagram

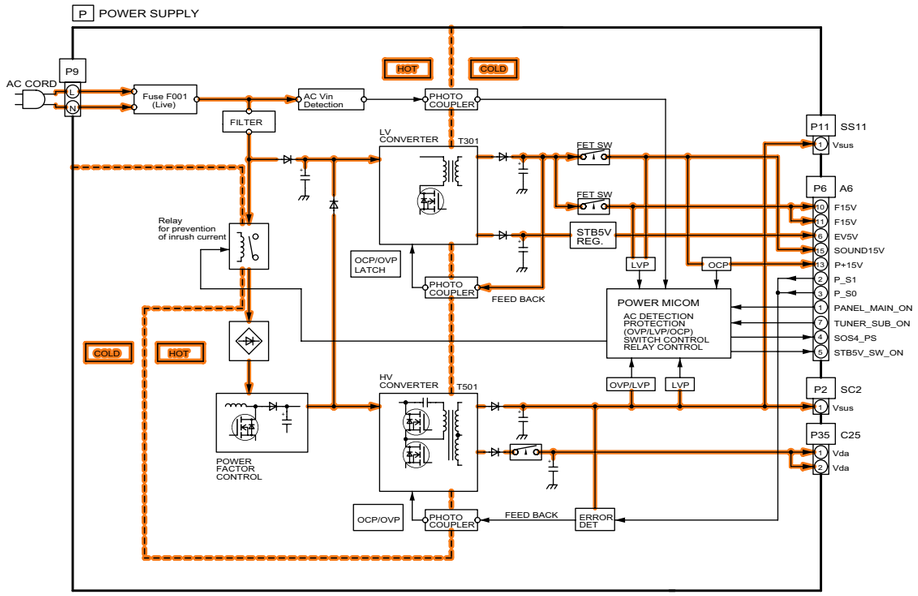

11.5. Block (4/4) Diagram

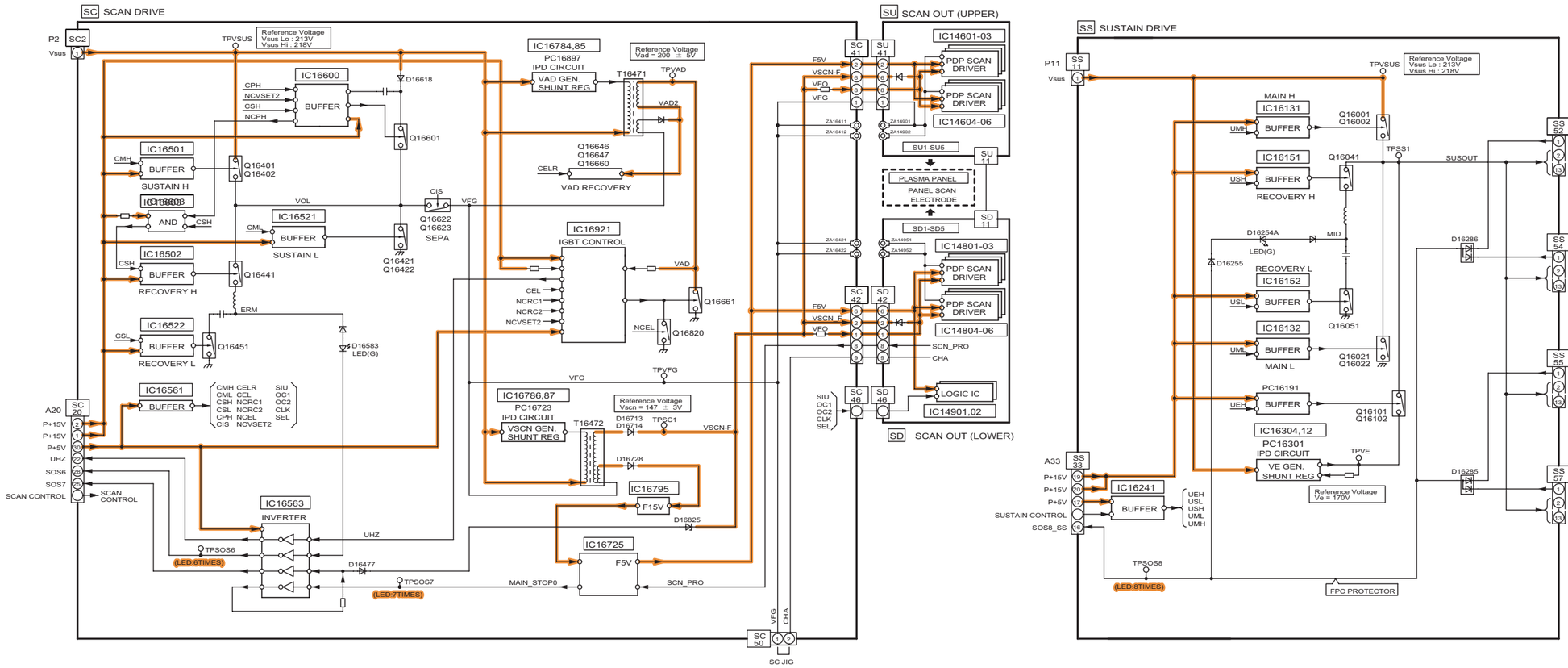

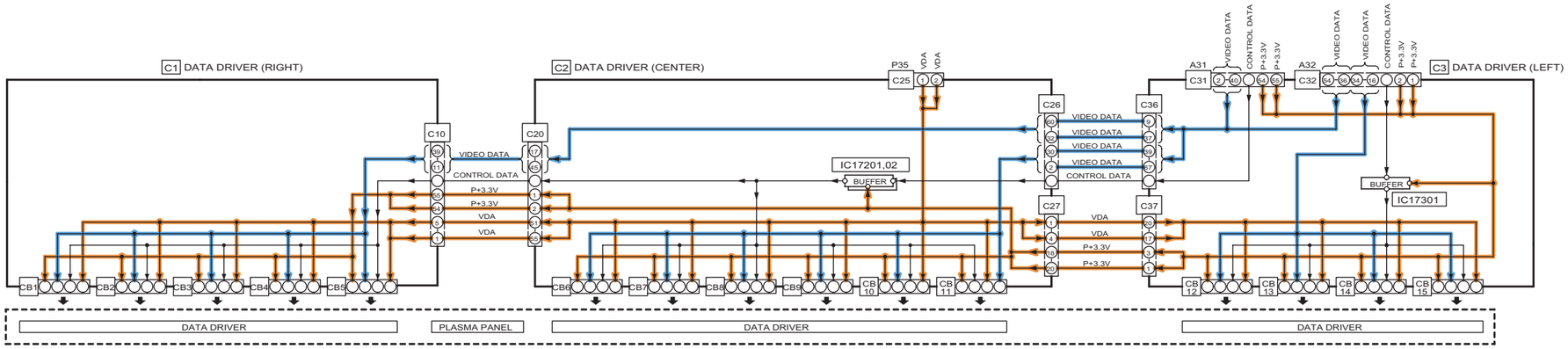

12 Wiring Connection Diagram

12.1. Caution statement.

Caution:

Please confirm that all flexible cables are assembled correctly.
Also make sure that they are locked in the connectors.
Verify by giving the flexible cables a very slight pull.

12.2. Wiring (1)

As Drawing Below:

1. Wire Connector :
   - Connector : P6-A6 , P2-SC2 , P11-SS11 , P35-C25
2. Connector Flex :
   - Connector : A31-C31/A32-C32 , A33-SS33 ,A20-SC20 , C10-C20 , C26-C36 , SU11-SD11/C27-C37

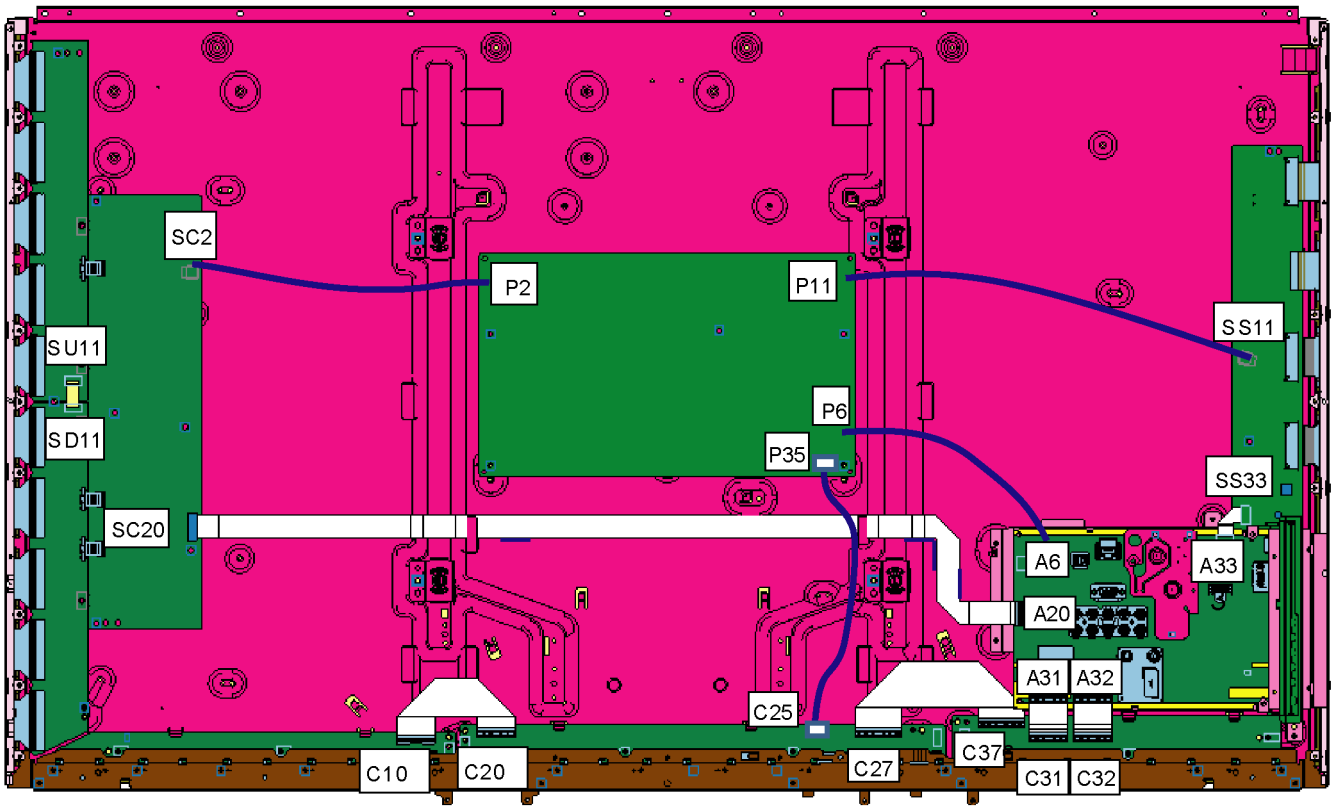

CONNECTOR No. and NAME	
A20	SN20
A31	C31
A32	C32
A33	SS33
A6	P6
P35	C25
C10	C20

12.3. Wiring (2)

C10 - C20 FFC T4FP1505Q : 0.06 (TAPE 60mm X 1)
C26 - C36 FFC T4FP1505Q : 0.06 (TAPE 60mm X 1)

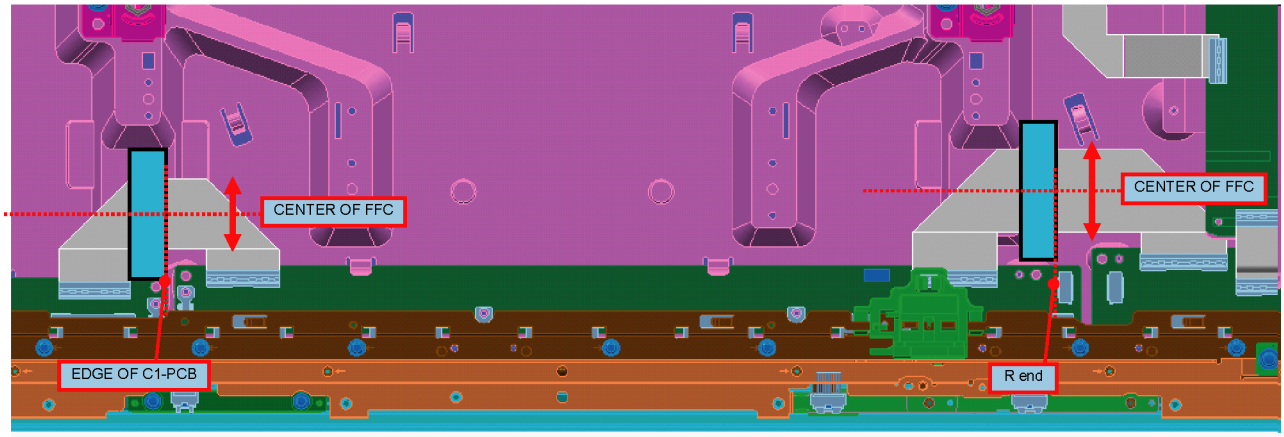

12.4. Wiring (3)

A20 - SC20 FFC T4FP1505Q : 0.36 (TAPE 60mm X 6)
C25 - P35 WIRE T4FP1505Q : 0.12 (TAPE 60mm X 2)

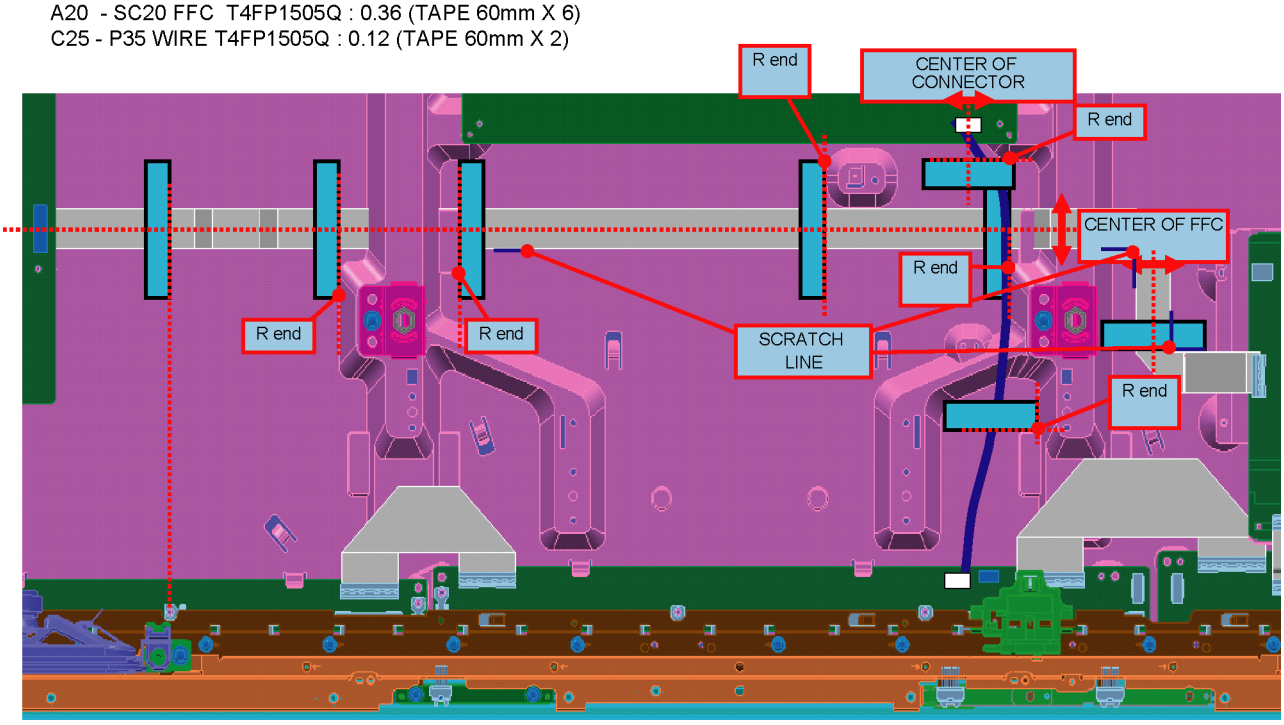

12.5. Wiring (4)

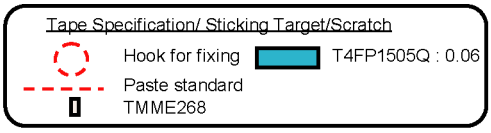

As drawing below :
1.Connector each wire.
2. Insert wire to hook of FE-chassis. Show the below.

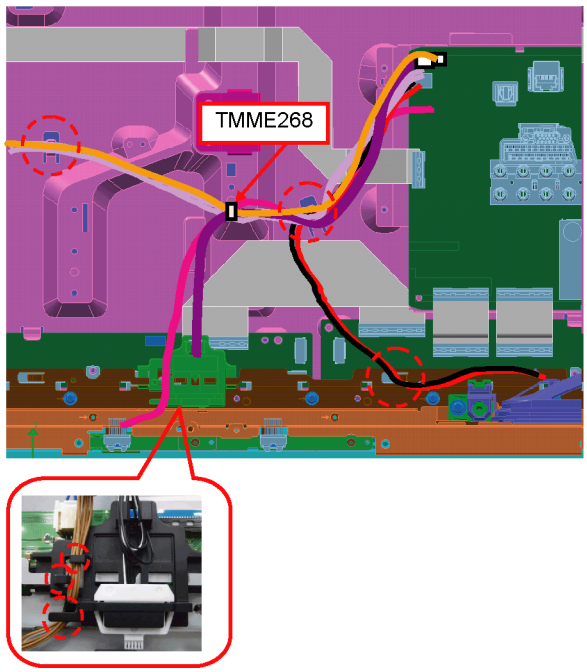

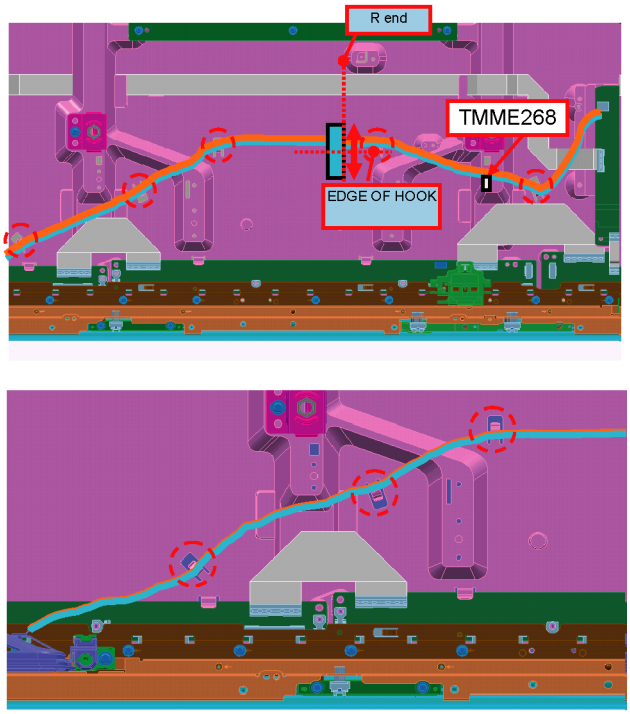

Notes:

1. Resistor
   Unit of resistance is OHM [Ω] (K=1,000, M=1,000,000).
2. Capacitor
   Unit of capacitance is μF, unless otherwise noted.
3. Coil
   Unit of inductance is H, unless otherwise noted.
4. Test Point
   : Test Point position
5. Earth Symbol
   : Chassis Earth (Cold) : Line Earth (Hot)
6. Voltage Measurement
   Voltage is measured by a DC voltmeter.
   Conditions of the measurement are the following:
   Power Source ..... AC 110-240 V, 50/60Hz (P)
   AC 220-240 V, 50/60Hz (Except P)
   Receiving Signal ..... Colour Bar signal (RF)
   All customer's controls ..... Maximum positions
7. When arrow mark (↗) is found, connection is easily found from the direction of arrow.
8. Indicates the major signal flow. : Video ➡ Audio ⇨
9. This schematic diagram is the latest at the time of printing and subject to change without

Notice: Use the parts number indicated on the Replacement parts List.

Remarks:

1. The Power Circuit contains a circuit area which uses a separate power supply to isolate the earth connection.
   The circuit is defined by HOT and COLD indications in the schematic diagram. Take the follwing precautions.
   All circuits, except the Power Circuit, are cold.
   Precautions
   a. Do not touch the hot part or the hot and cold parts at the same time or you may be shocked.
   b. Do not short- circuit the hot and cold circuits or a fuse may blow and parts may break.
   c. Do not connect an instrument, such as an oscilloscope, to the hot and cold circuits simultaneously or a fuse may blow.
   Connect the earth of instruments to the earth connection of the circuit being measured.
   d. Make sure to disconnect the power plug before removing the chassis.

Note: All parts except parts mentioned [PAVCTH] in the Remarks column are supplied by AVC-CSPC.
Parts mentioned [PAVCTH] are supplied by PAVCTH.

Notice: Be sure to make your orders of replacement parts according to this list.

RTL (Retention Time Limited)

Note: The marking (RTL) indicates that the Retention Time is Limited for this item.
After the discontinuation of this assembly in production, the item will continue to be available for a specific period of time. The retention period of availability is dependant on the type of assembly, and in accordance with the laws governing part and product retention. After the end of this period, the assembly will no longer be available.

Abbreviation of part name and description

1. Resistor

Example:

ERD25TJ104 C 100KOHM, J, 1/4W

Type Allowance

2. Capacitor

Example:

ECKF1H103ZF C 0.01UF, Z, 50V

Type Allowance

Type	Allowance
C : Carbon F : Fuse M : Metal Oxide Metal FIlm S : Solid W : Wire Wound	F : ±1% G : ±2% J : ±5% K : ±10% M : ±20%

Type	Allowance
C : Ceramic E : Electrolytic P : Polyester Polypropylene T : Tantalum	C : ±0.25pF D : ±0.5pF F : ±1pF G : ±3pF J : ±5pF K : ±10pF L : ±15pF M : ±20pF P : +100%, -0% Z : +80%, -20%

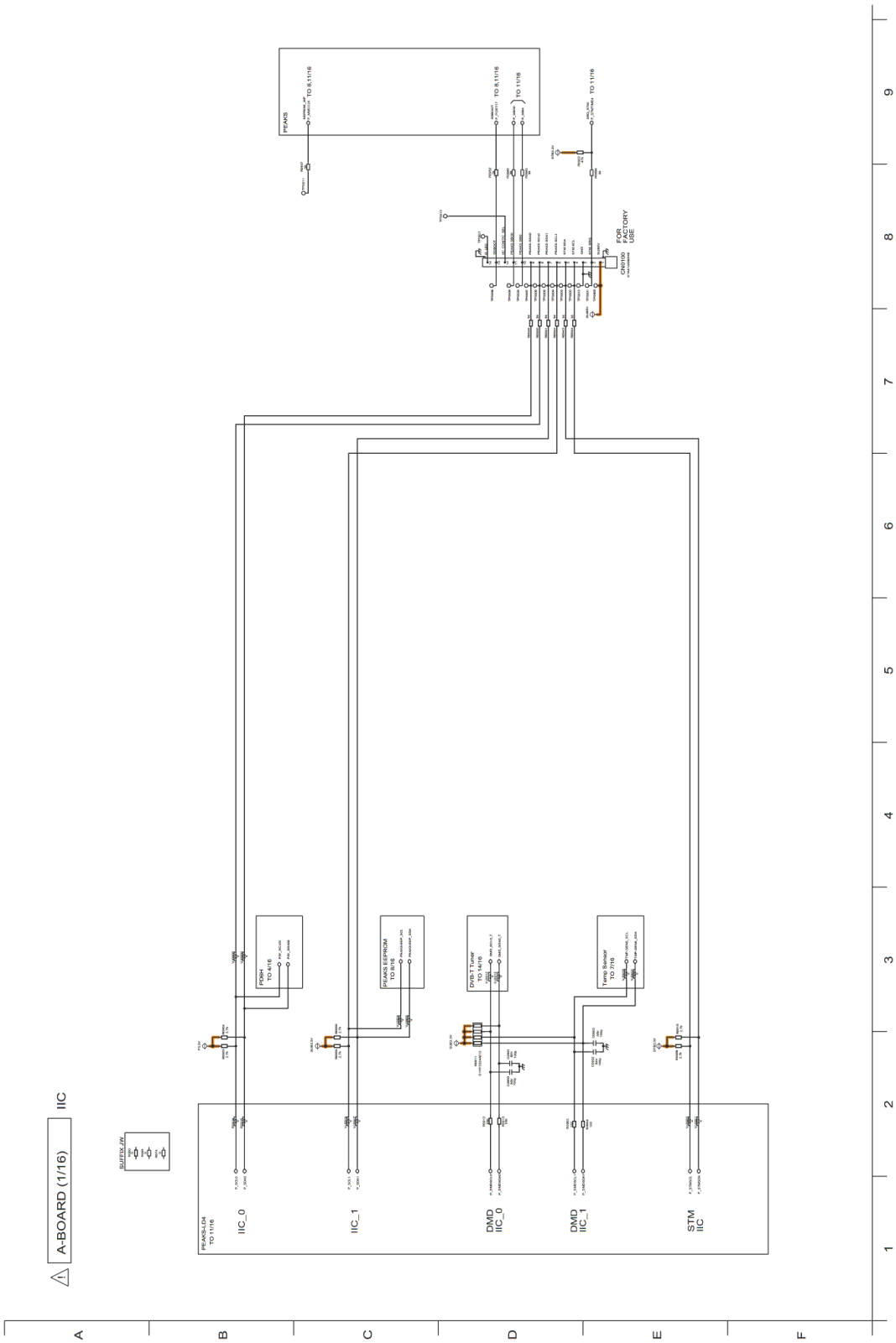
A-BOARD (1/16)
IIC
SUPER-JW
PEAKS-L04
TO 11/16
IIC_0
IIC_1
DMD
IIC_0
DMD
IIC_1
STM
IIC
PDIH
TO 4/16
PEAKS EEPROM
TO 5/16
DVB-T Tuner
TO 14/16
Temp Sensor
TO 7/16
PEAKS
TO 8,11/16
TO 11/16
TO 11/16
FOR
FACTORY
USE
CN0100
A
B
C
D
E
F
1
2
3
4
5
6
7
8
9

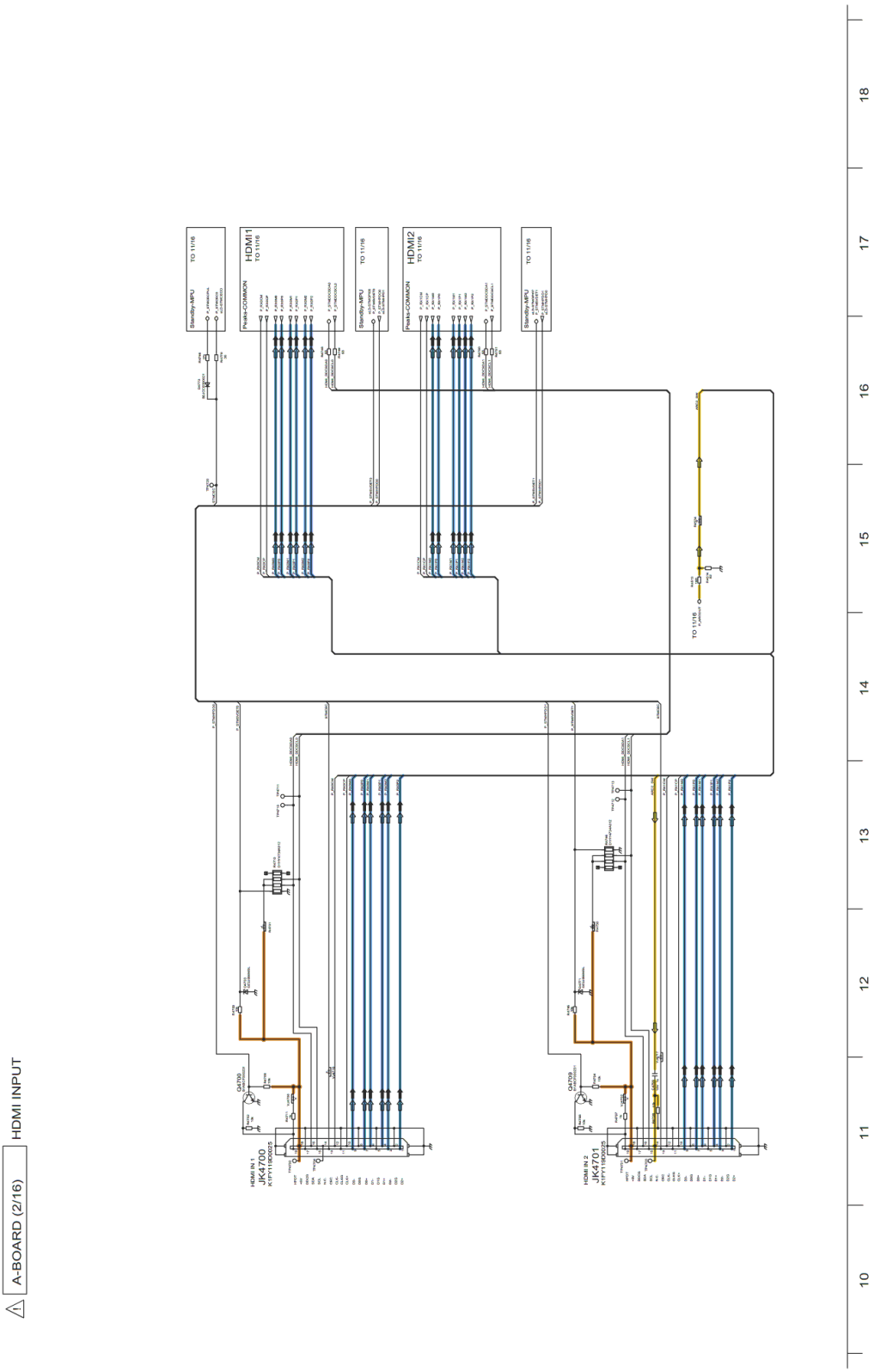
A-BOARD (2/16)
HDMI INPUT
Standby-MPU
TO 11/16
HDMI1
TO 11/16
Peaks-COMMON
HDMI2
TO 11/16
HDMI IN 1
JK4700
K1FY115D0025
HDMI IN 2
JK4701
K1FY115D0025
10
11
12
13
14
15
16
17
18

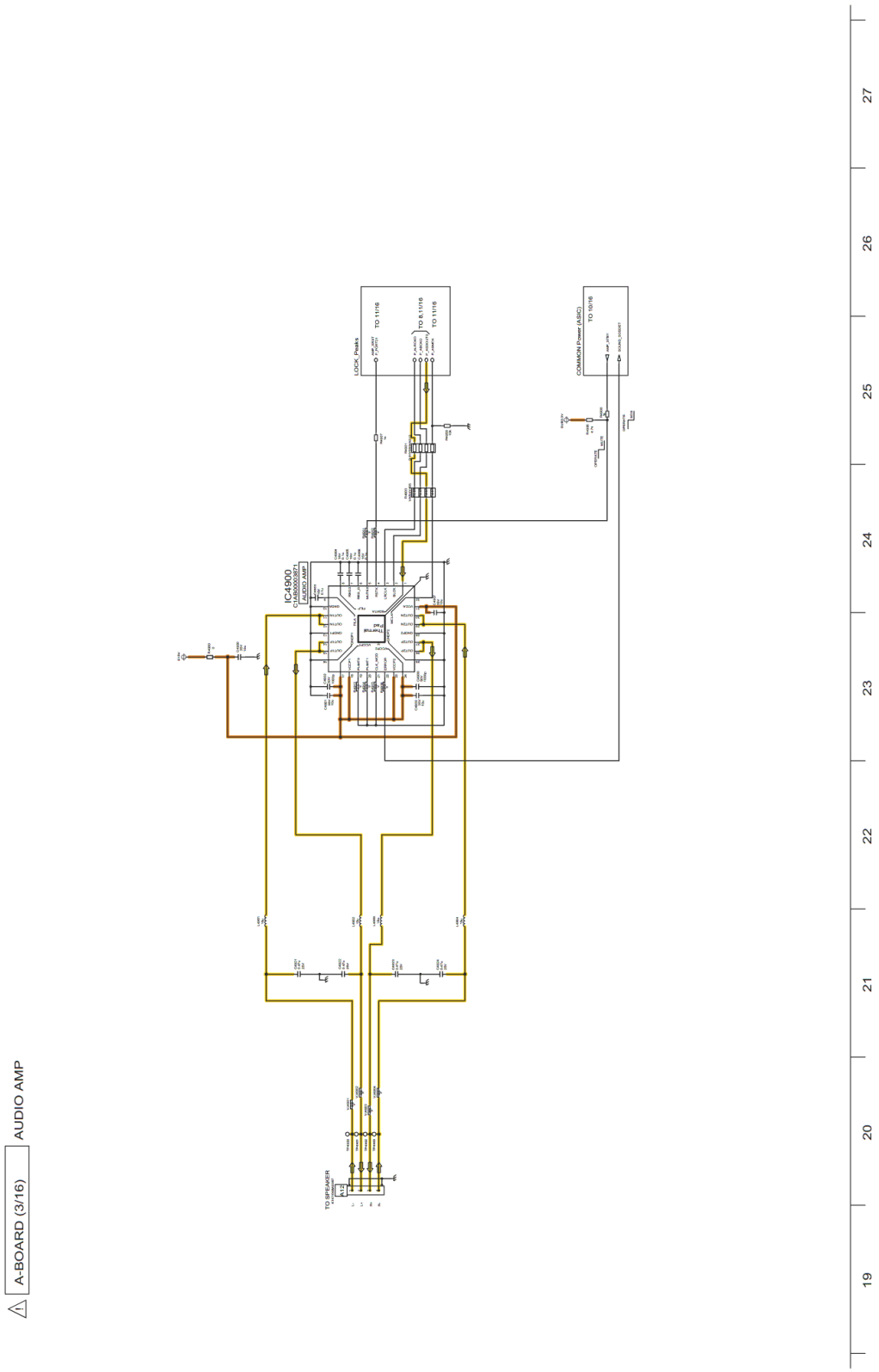
A-BOARD (3/16)
AUDIO AMP
IC4900
LA6500UR1
AUDIO AMP
LOCK_Peaks
TO 11/16
TO 11/16
TO 11/16
COMMON Power (ASIC)
TO 10/16
TO SPEAKER
19
20
21
22
23
24
25
26
27

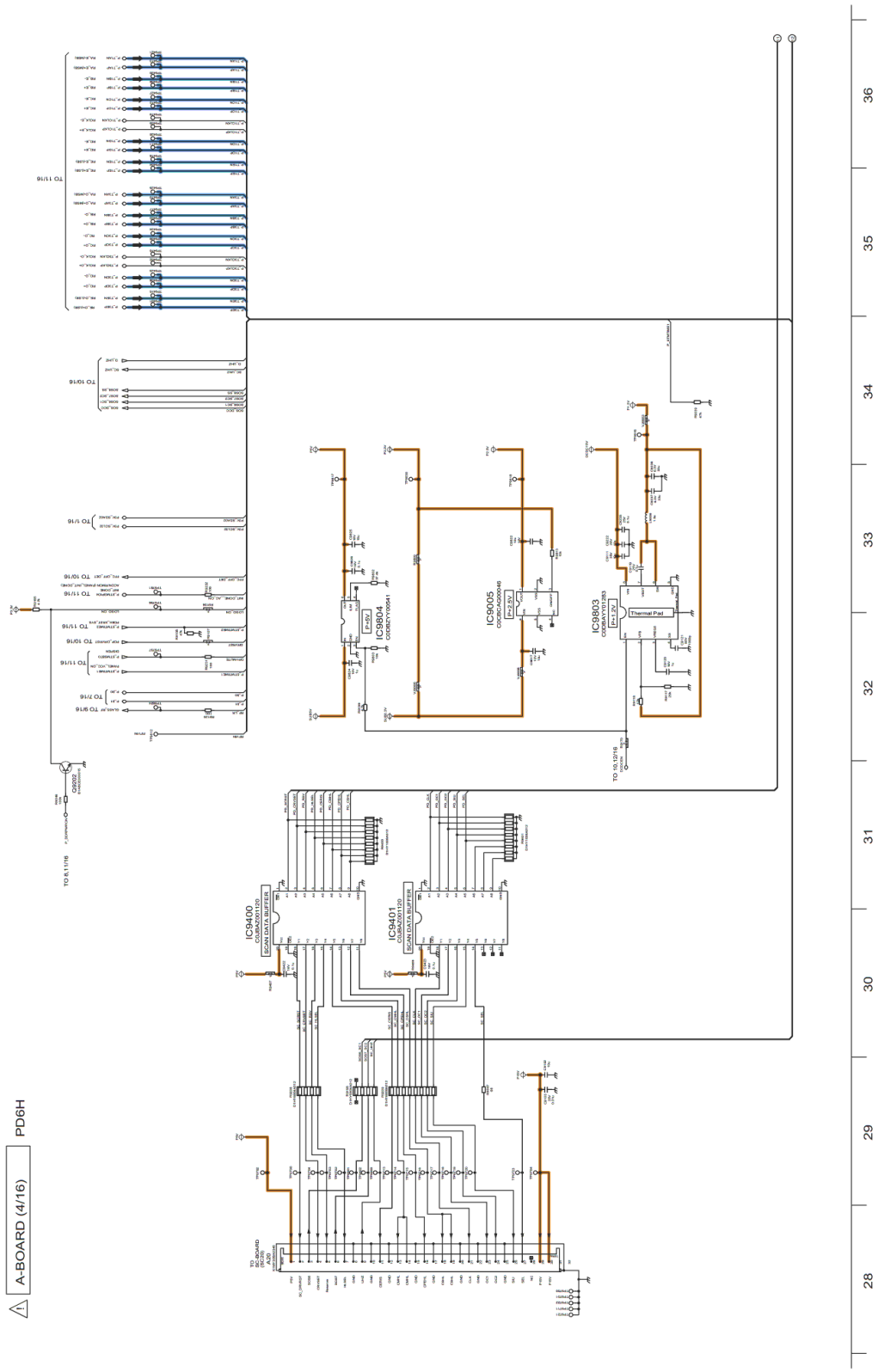
A-BOARD (4/16)
PD6H
IC9400
SCAN DATA BUFFER
IC9401
SCAN DATA BUFFER
IC9804
IC9005
IC9803
Thermal Pad
TO 1/16
TO 10/16
TO 11/16
TO 7/16
TO 8/16
TO 6,11/16
TO 10,12/16
28
29
30
31
32
33
34
35
36

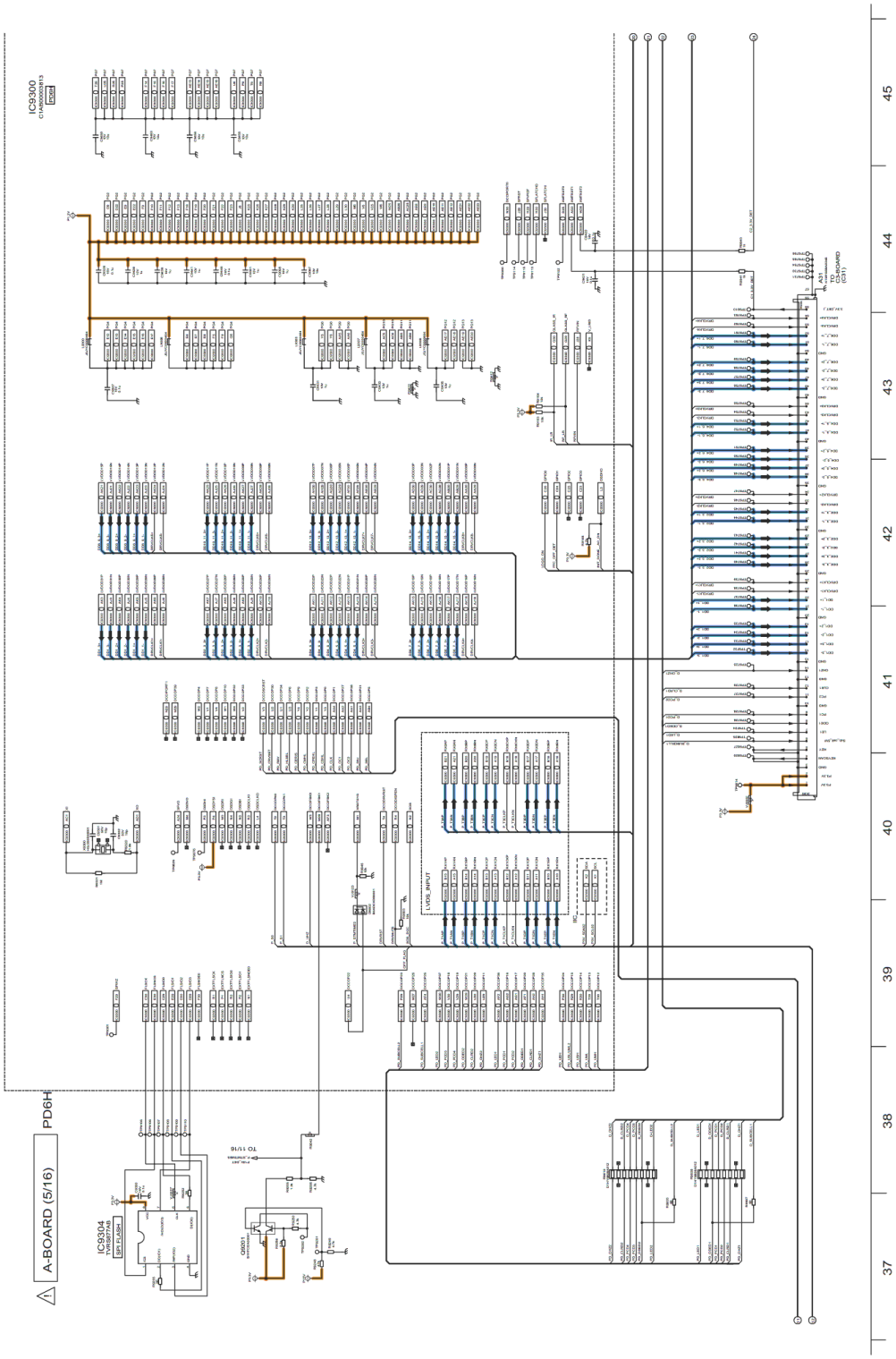
A-BOARD (5/16)
PD6H
IC9300
IC9304
LVDS_INPUT
TO 11/16
45
44
43
42
41
40
39
38
37

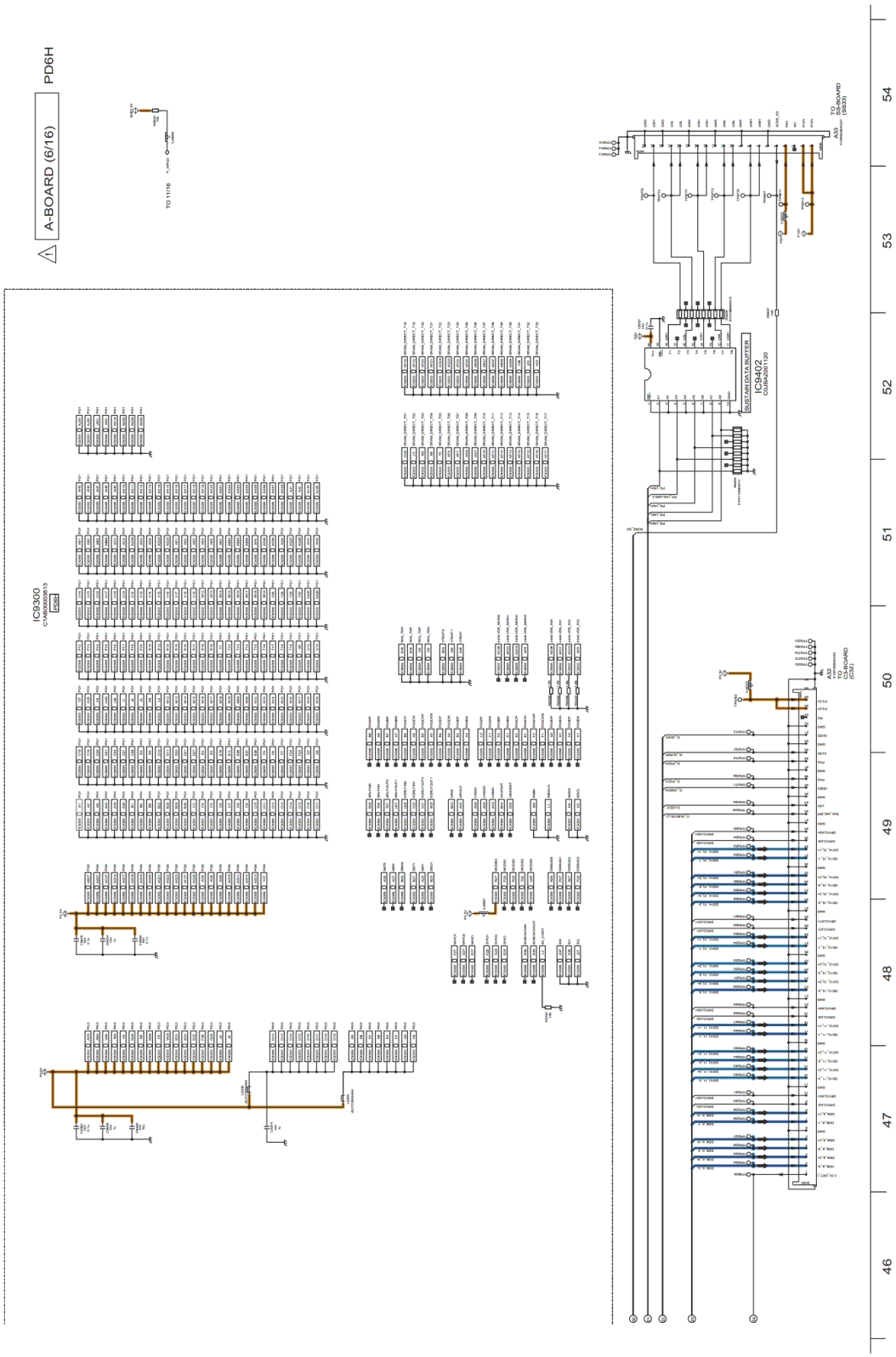
A-BOARD (6/16)
PD6H
IC9300
IC9402
SUSTAIN DATA BUFFER
TO 11/16
TO T-BOARD (SS33)
TO CS-BOARD (CS6)
54
53
52
51
50
49
48
47
46

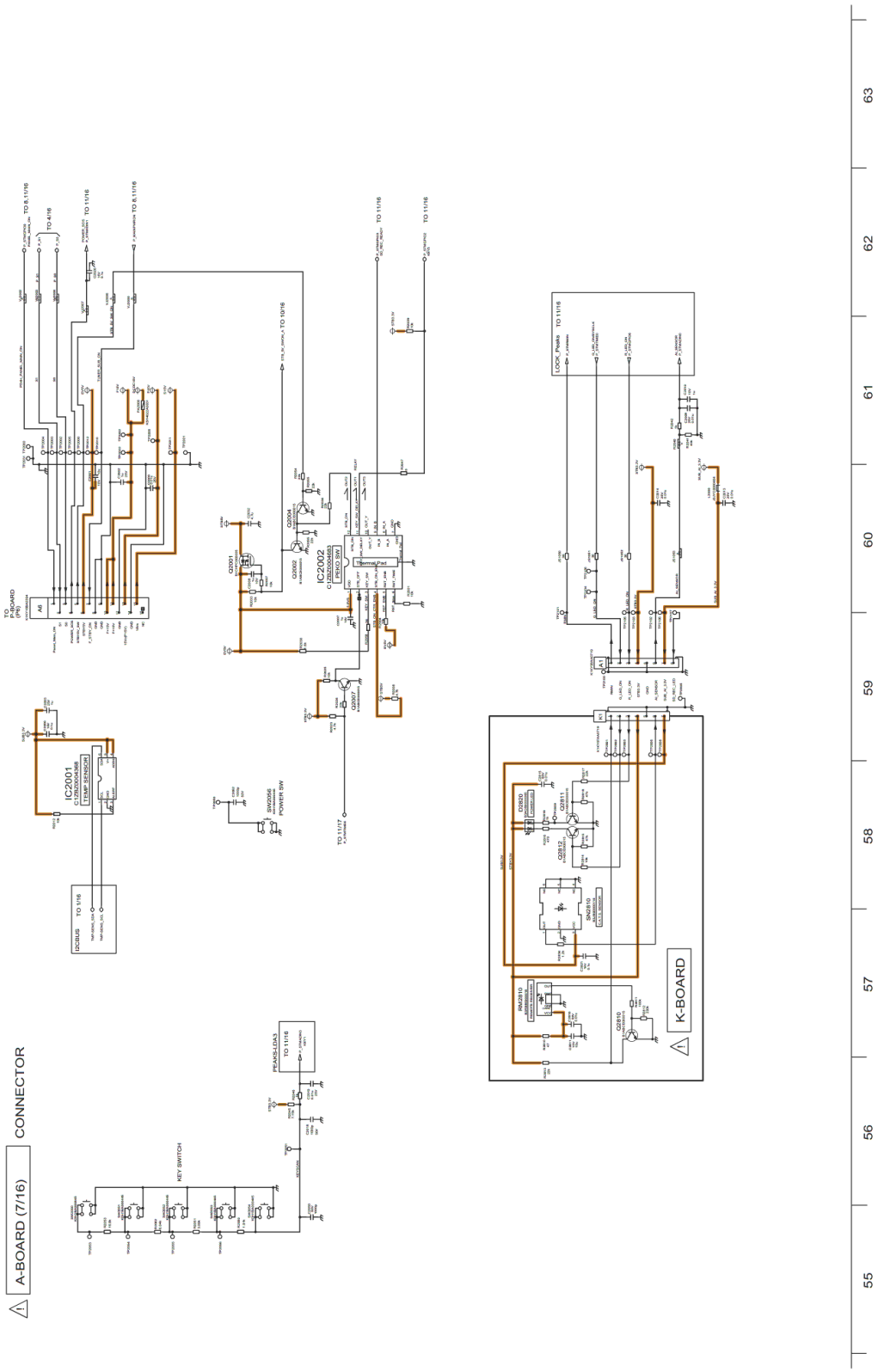
A-BOARD (7/16)
CONNECTOR
KEY SWITCH
IC2001
IC2002
POWER SW
K-BOARD
55
56
57
58
59
60
61
62
63

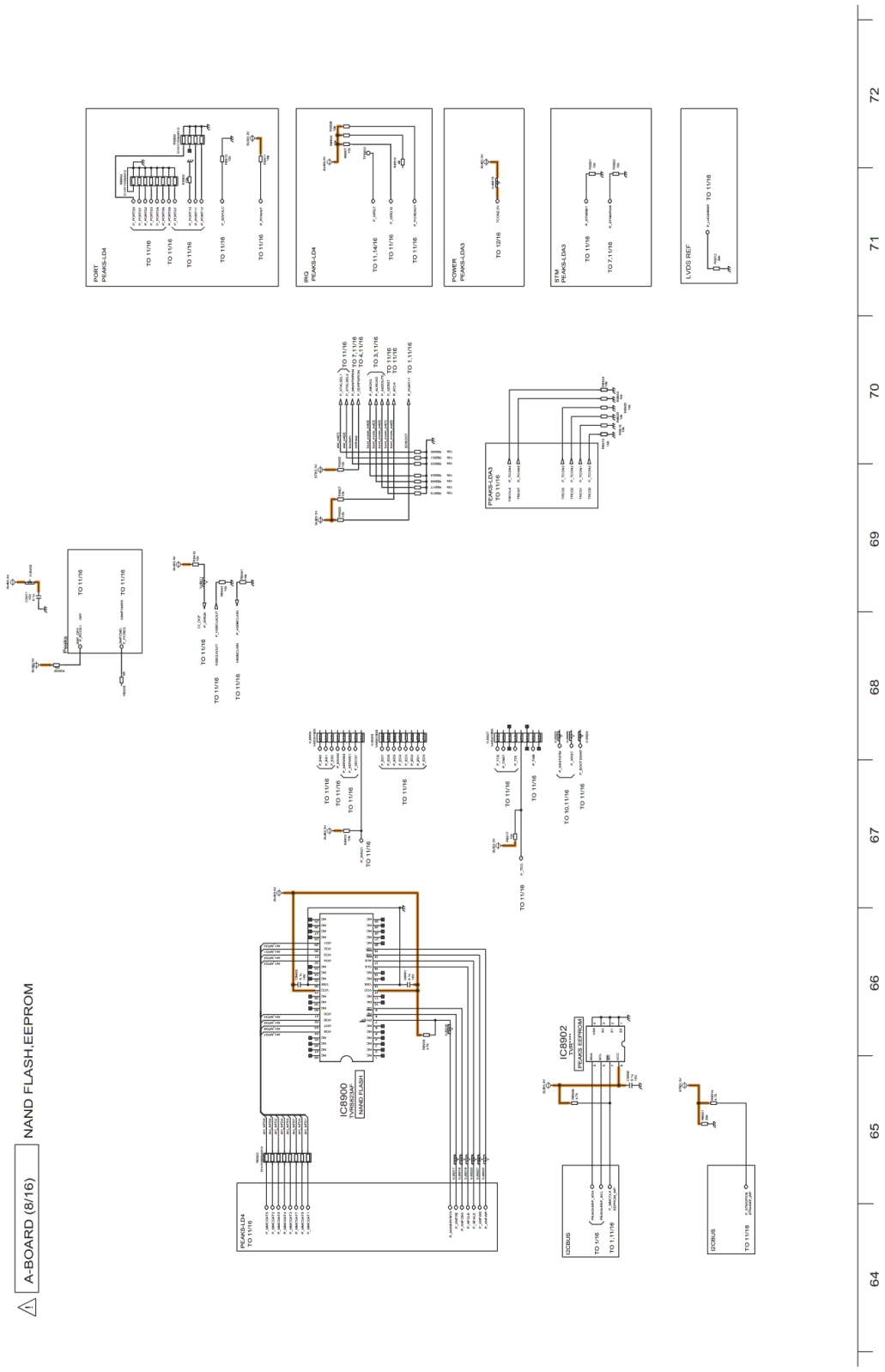
A-BOARD (8/16)
NAND FLASH,EEPROM
IC8900
NAND FLASH
IC8902
EEPROM
PEAKS-LD4
PEAKS-LD3
I2CBUS
POST
IRQ
POWER
STM
LVDS REF
64
65
66
67
68
69
70
71
72

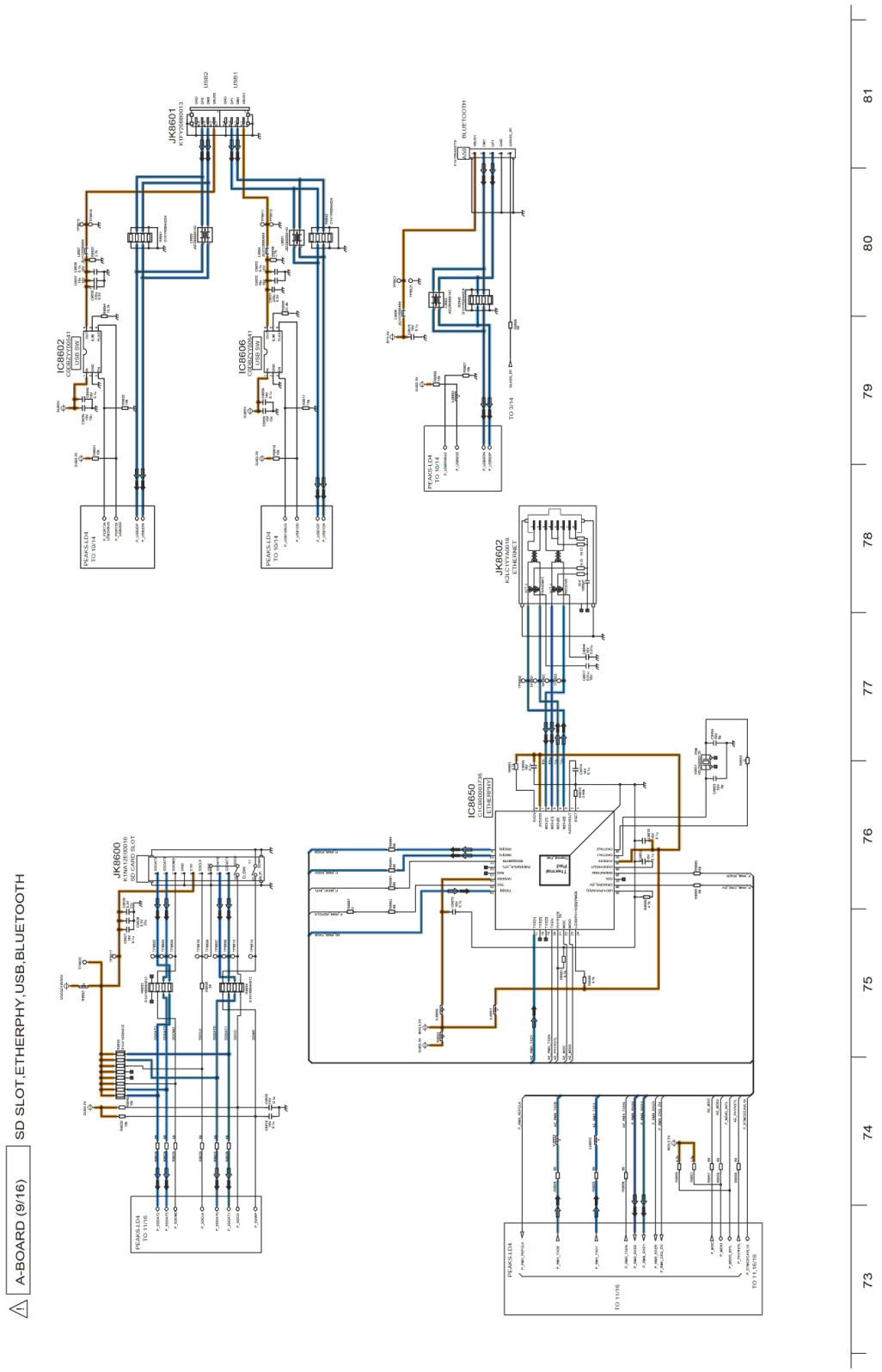
A-BOARD (9/16)
SD SLOT,ETHERPHY,USB,BLUETOOTH
JK8600
JK8601
JK8602
IC8602
IC8606
IC8650
BLUETOOTH
73
74
75
76
77
78
79
80
81

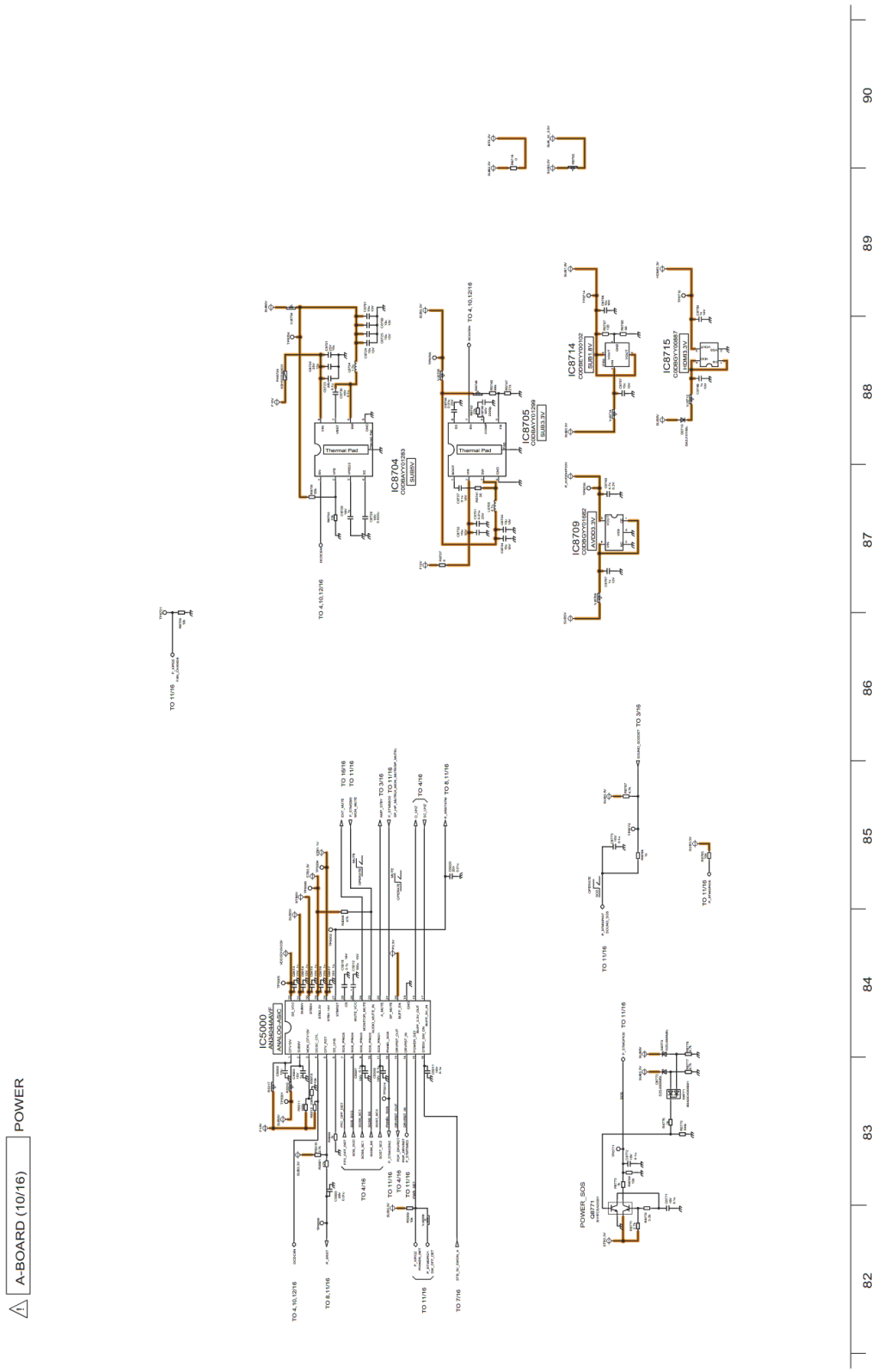
A-BOARD (10/16)
POWER
IC5000
AN38048AKF
IC8704
IC8705
IC8709
IC8714
IC8715
POWER_SOS
Thermal Pad
82
83
84
85
86
87
88
89
90

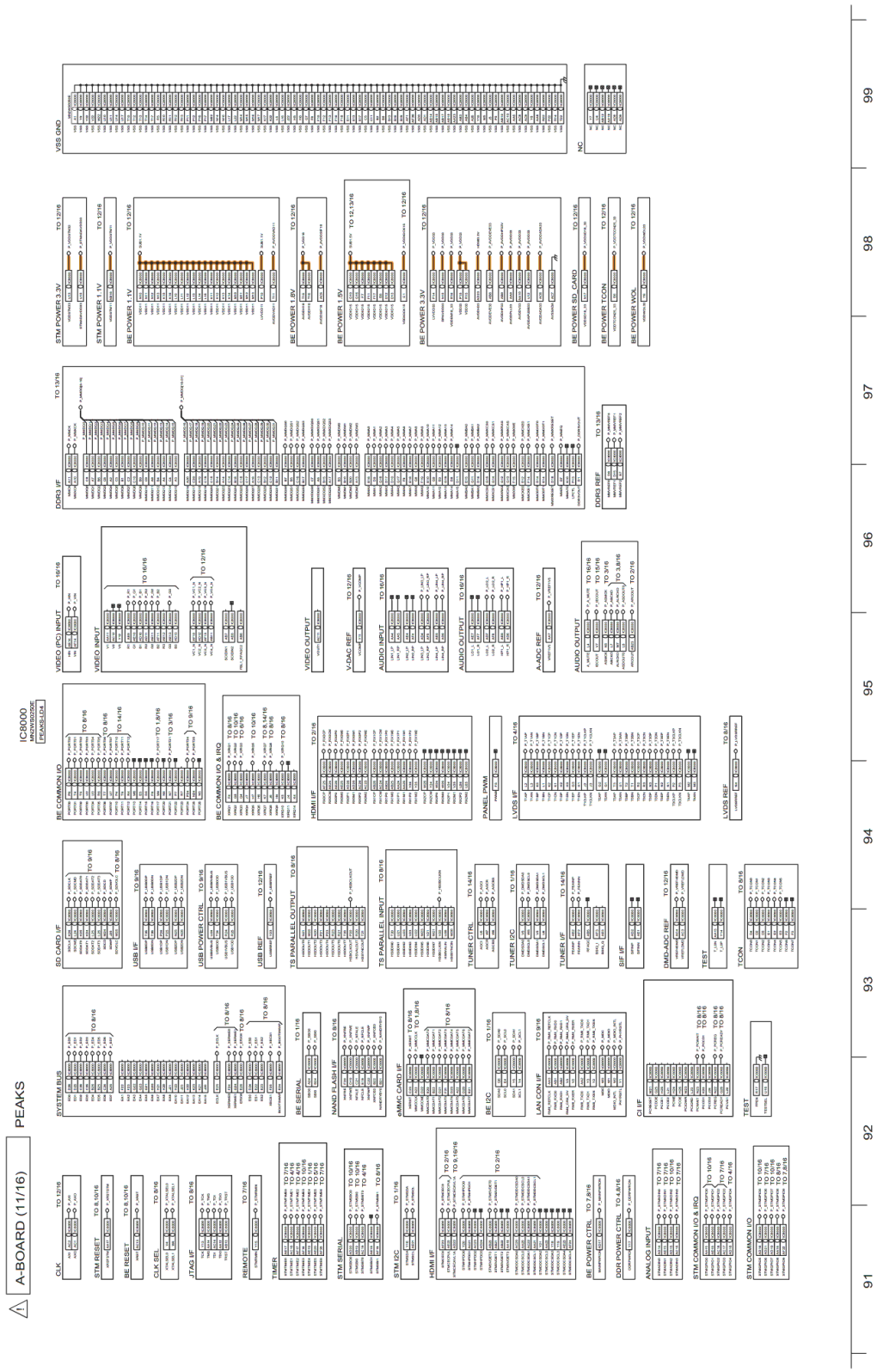
A-BOARD (11/16)
PEAKS
IC8000
MN2WS0250R
PEAKS-LC4
CLK
STM RESET
BE RESET
CLK SEL
JTAG I/F
REMOTE
TIMER
STM SERIAL
STM I2C
HDMI I/F
BE POWER CTRL
DDR POWER CTRL
ANALOG INPUT
STM COMMON I/O & IRQ
STM COMMON I/O
SYSTEM BUS
BE SERIAL
NAND FLASH I/F
eMMC CARD I/F
BE I2C
LAN CON I/F
CI I/F
TEST
SD CARD I/F
USB I/F
USB POWER CTRL
USB REF
TS PARALLEL OUTPUT
TS PARALLEL INPUT
TUNER CTRL
TUNER I2C
TUNER I/F
SIF I/F
DMD-ADC REF
TEST
TCON
BE COMMON I/O
BE COMMON I/O & IRQ
HDMI I/F
PANEL PWM
LVDS I/F
LVDS REF
VIDEO (PC) INPUT
VIDEO INPUT
VIDEO OUTPUT
V-DAC REF
AUDIO INPUT
AUDIO OUTPUT
A-ADC REF
AUDIO OUTPUT
DDR3 I/F
DDR3 REF
STM POWER 3.3V
STM POWER 1.1V
BE POWER 1.1V
BE POWER 1.8V
BE POWER 1.5V
BE POWER 3.3V
BE POWER SD_CARD
BE POWER TCON
BE POWER WOL
VSS GND
NC
91
92
93
94
95
96
97
98
99

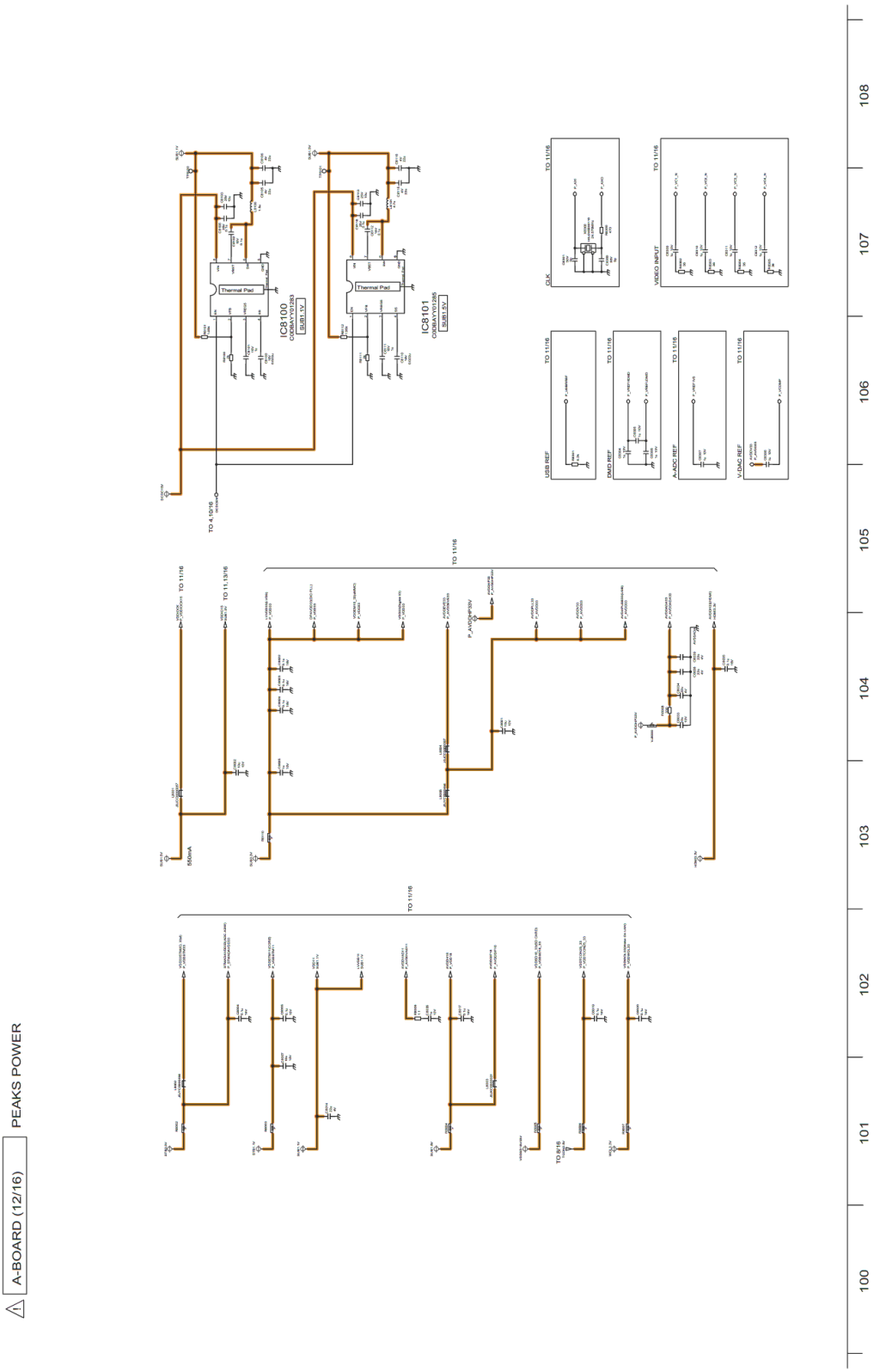
A-BOARD (12/16)
PEAKS POWER
IC8100
IC8101
Thermal Pad
USB REF
DMD REF
A-ADC REF
V-DAC REF
CLK
VIDEO INPUT
TO 11/16
TO 4,10/16
TO 11,13/16
TO 8/16
100
101
102
103
104
105
106
107
108

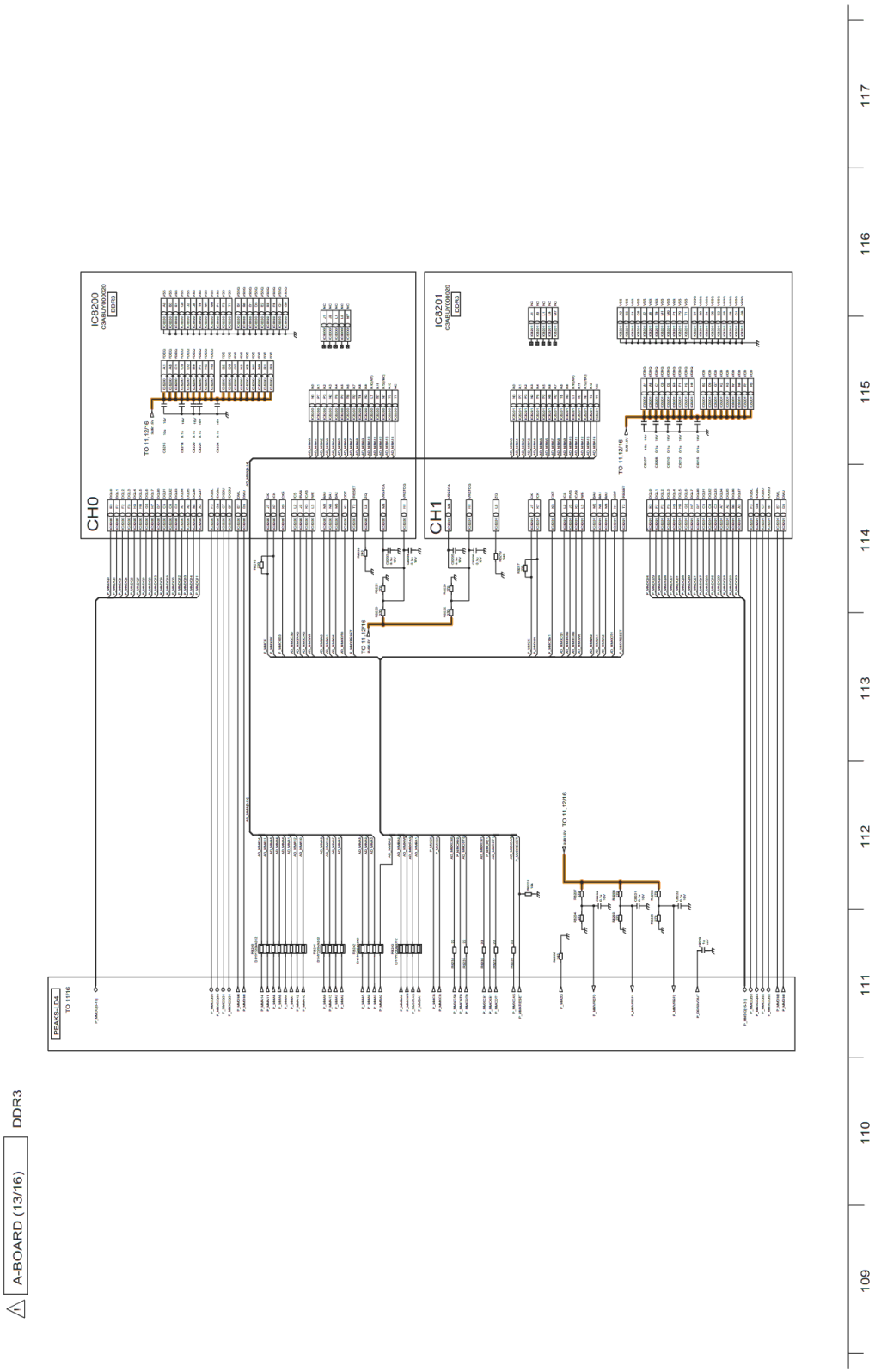
A-BOARD (13/16)
DDR3
CH0
CH1
IC8200
IC8201
DDR3
DDR3
PEAKSLD4
TO 11/16
TO 11,12/16
109
110
111
112
113
114
115
116
117

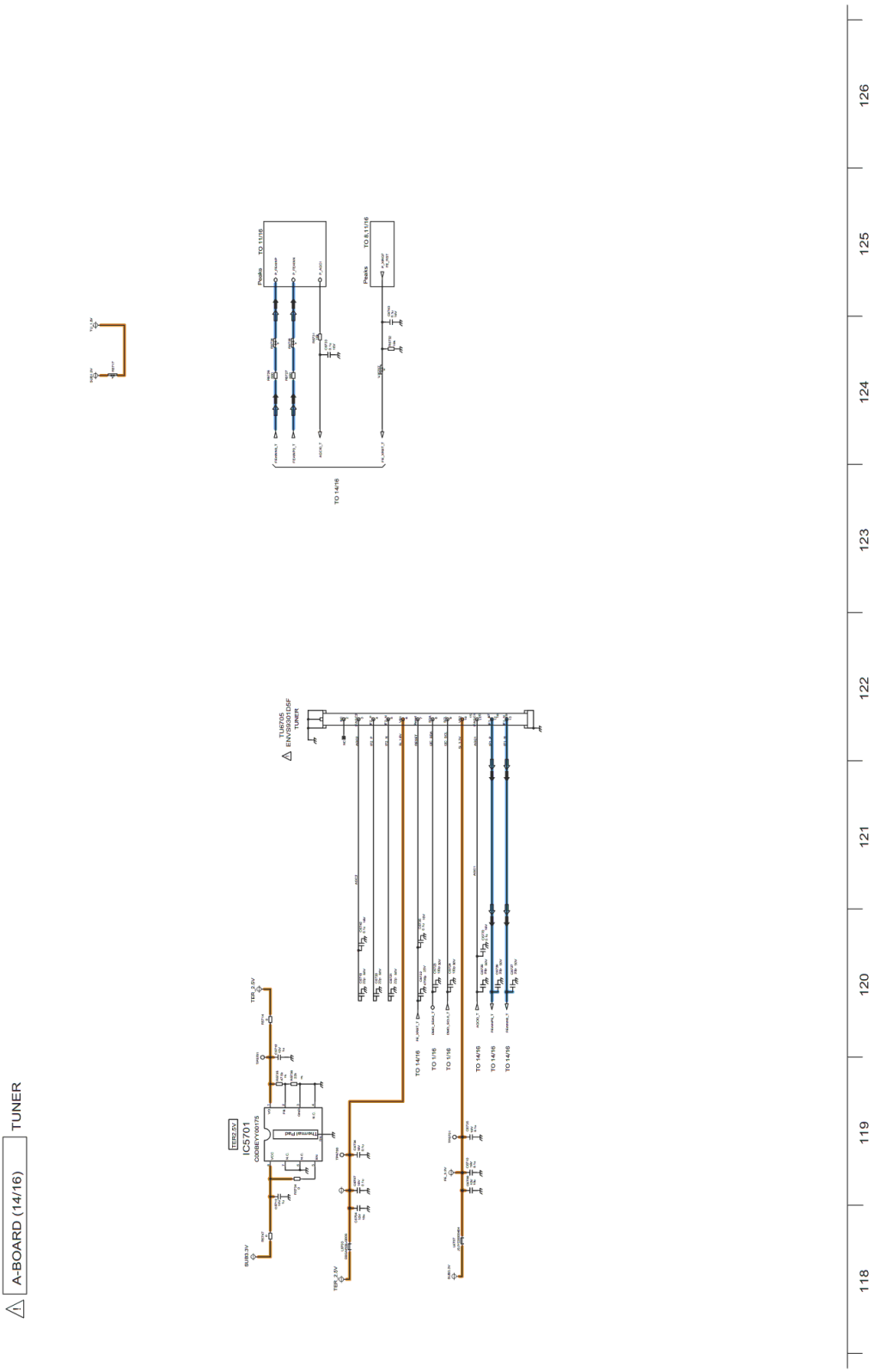
A-BOARD (14/16)
TUNER
IC5701
TU5705
TO 14/16
TO 1/16
TO 8,11/16
126
125
124
123
122
121
120
119
118

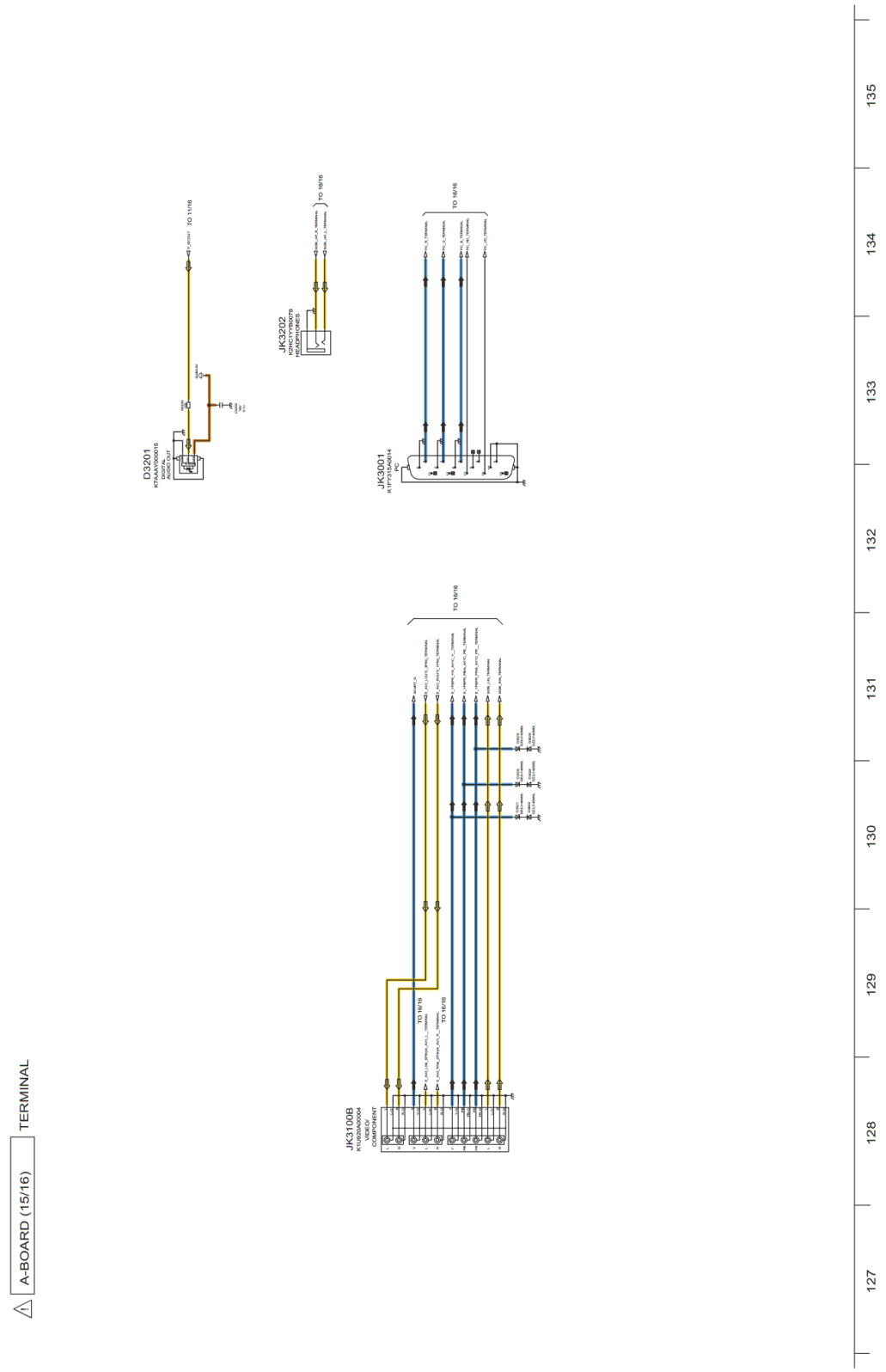
A-BOARD (15/16)
TERMINAL
D3201
JK3202
JK3001
JK3100B
TO 15/16
TO 16/16
127
128
129
130
131
132
133
134
135

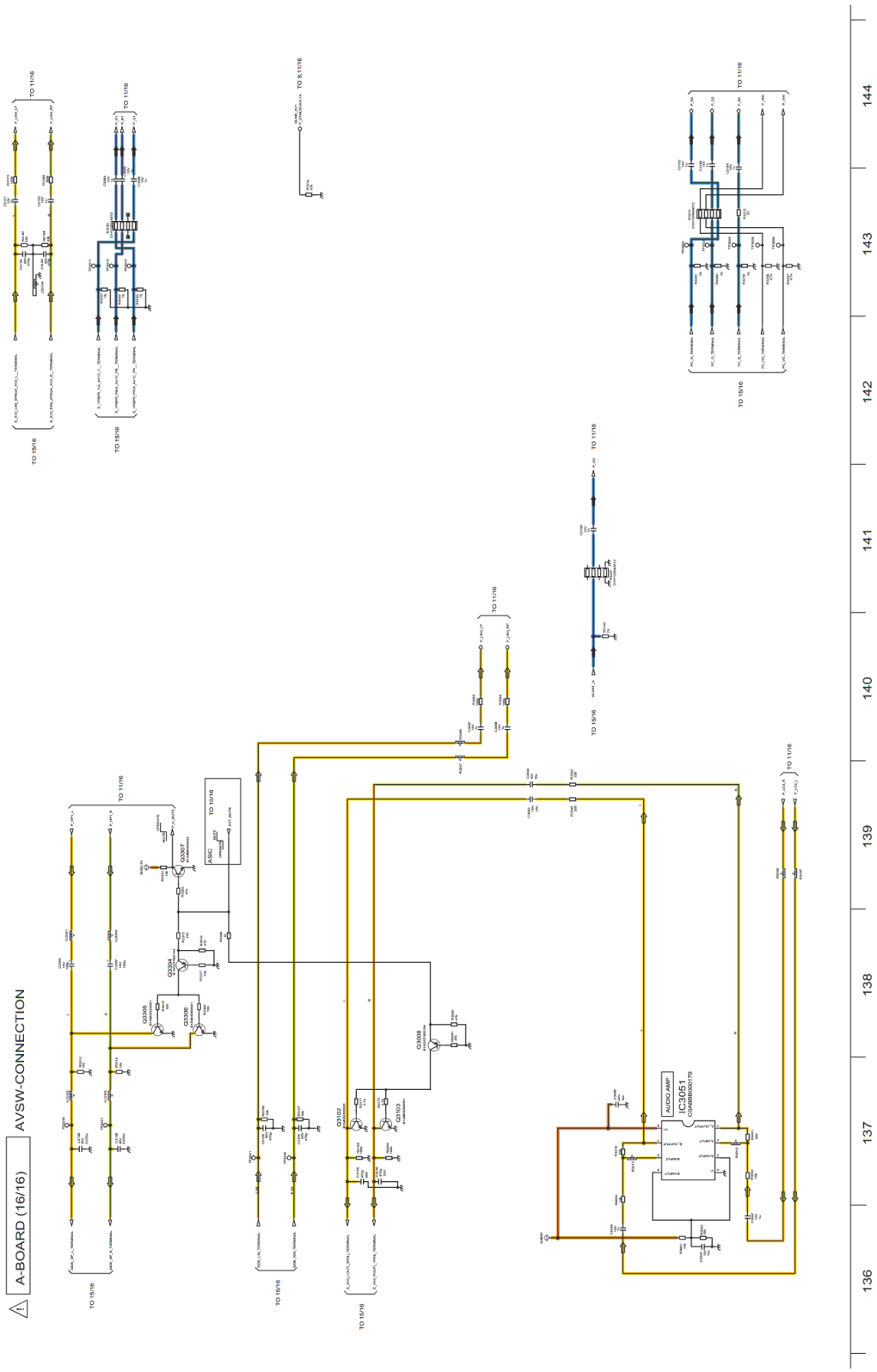
A-BOARD (16/16)
AVSW-CONNECTION
136
137
138
139
140
141
142
143
144
TO 15/16
TO 11/16
TO 10/16
ASIC
AUDIO AMP
IC3051
Q3305
Q3306
Q3307
Q3304
Q3308
Q3102
Q3103

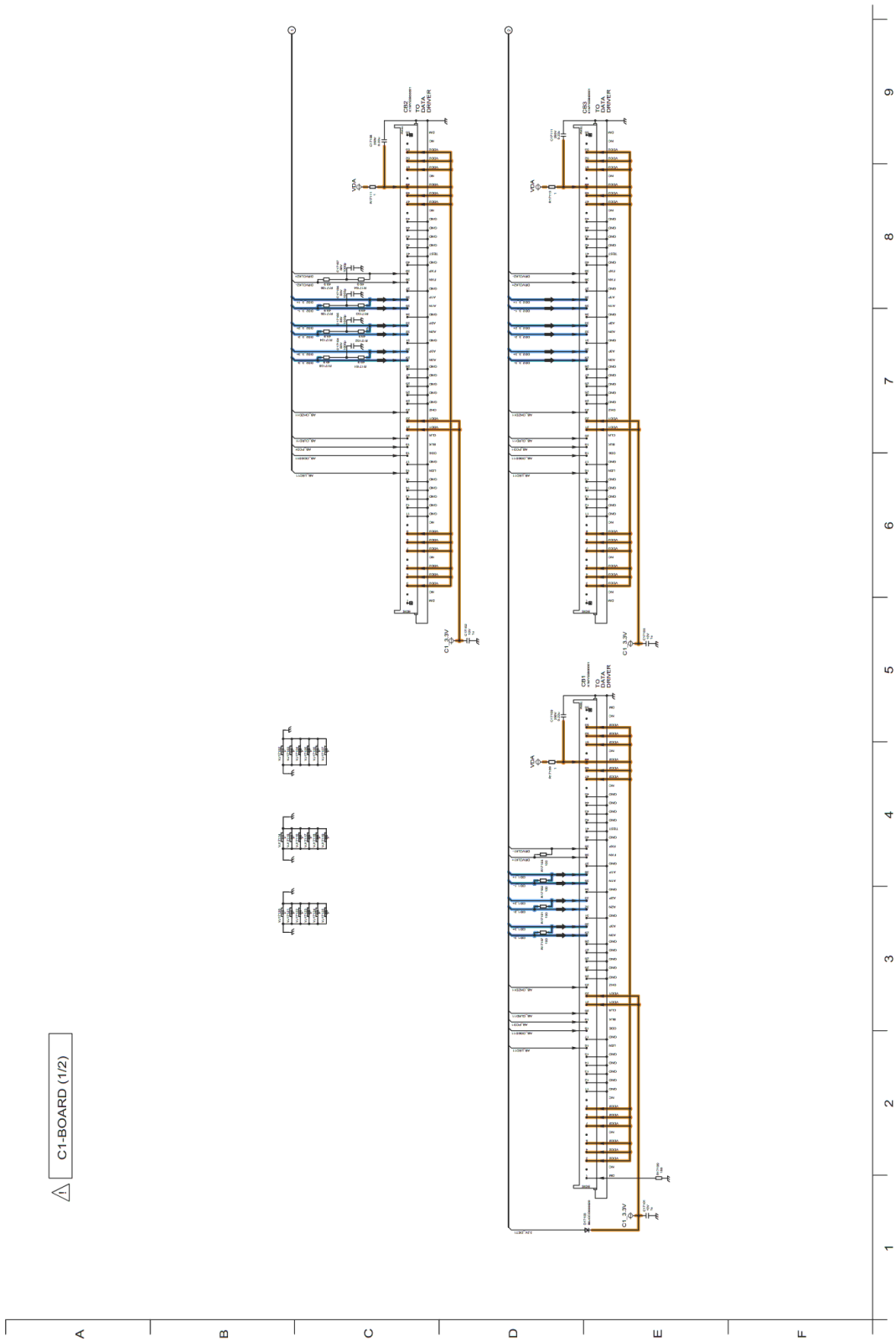
C1-BOARD (1/2)
CN82
TO
DATA
DRIVER
CN83
TO
DATA
DRIVER
CN81
TO
DATA
DRIVER
VDA
C1_3.3V
A
B
C
D
E
F
1
2
3
4
5
6
7
8
9

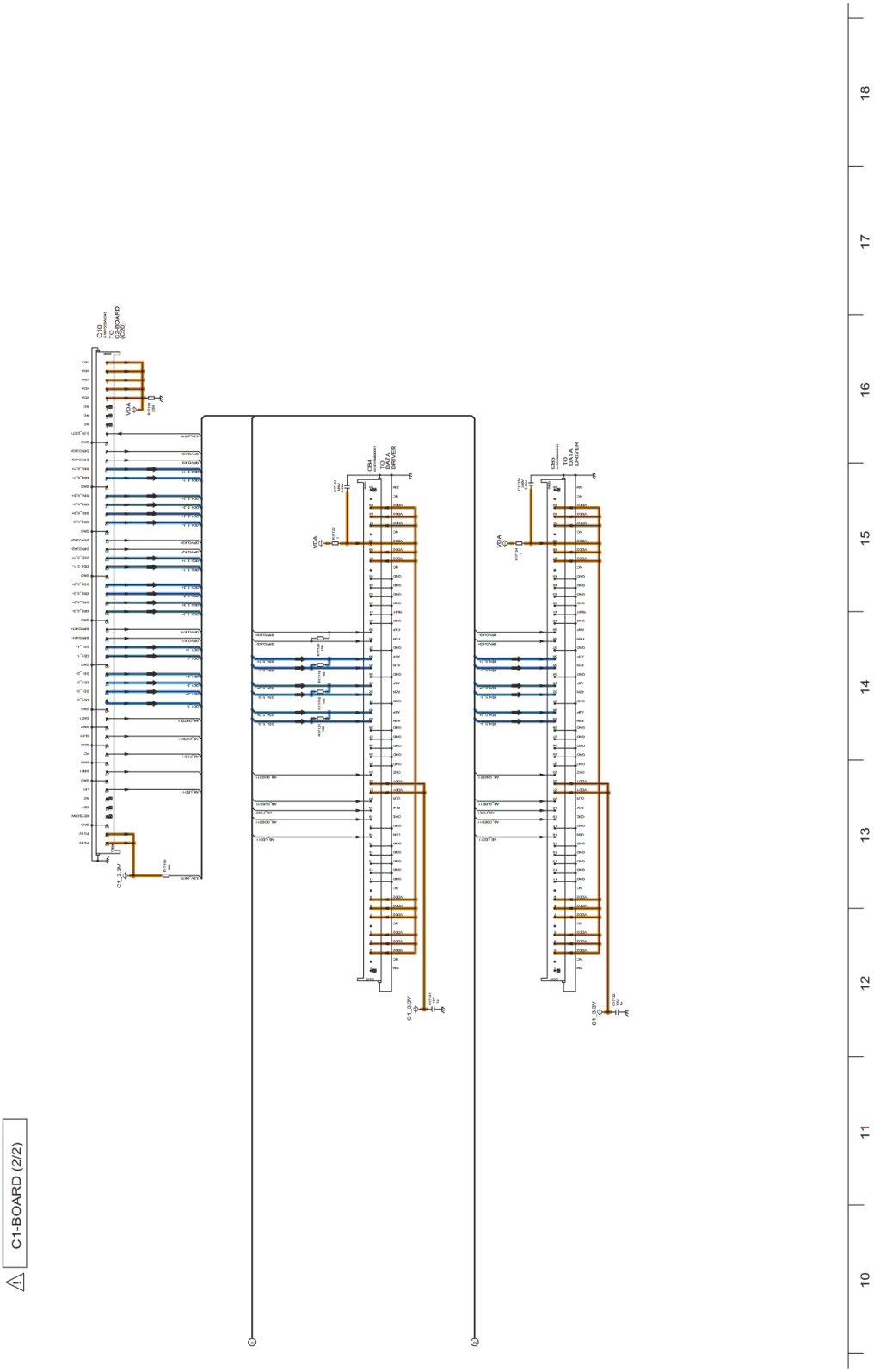
C1-BOARD (2/2)
C10
TO
C1-BOARD
(C20)
VDA
C1_3.3V
CS4
TO
DATA
DRIVER
CS5
TO
DATA
DRIVER
10
11
12
13
14
15
16
17
18

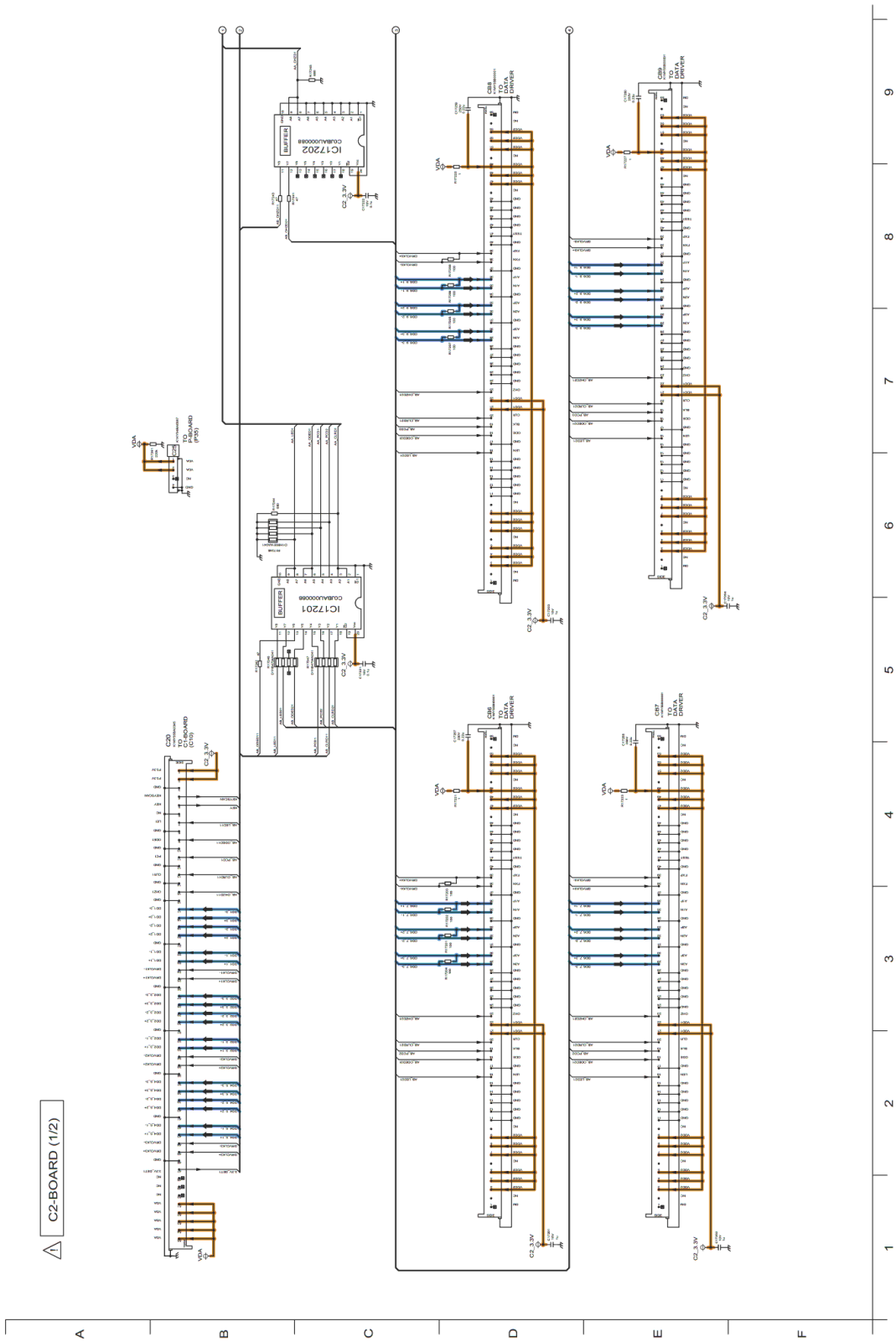
C2-BOARD (1/2)
IC1720 1
IC1720 2
BUFFER
C20
TO
C1-BOARD
(C10)
C2_3.3V
VDA
C2B
TO
DATA
DRIVER
C2F
TO
DATA
DRIVER
A
B
C
D
E
F
1
2
3
4
5
6
7
8
9

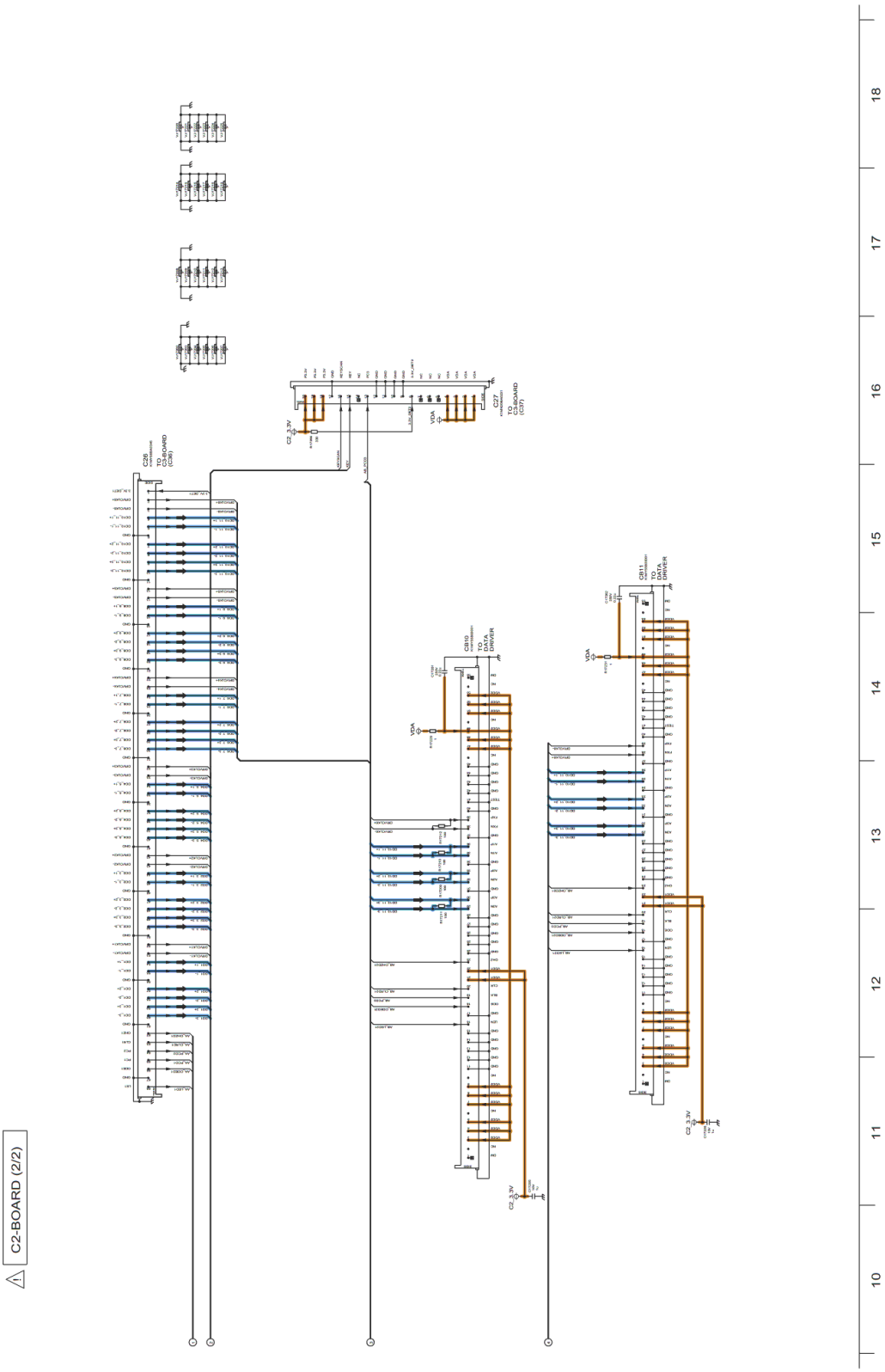
C2-BOARD (2/2)
C26
TO
C2-BOARD
(C36)
C27
TO
C2-BOARD
(C37)
CB10
TO
DATA
DRIVER
CB11
TO
DATA
DRIVER
VDA
C2_3V
10
11
12
13
14
15
16
17
18

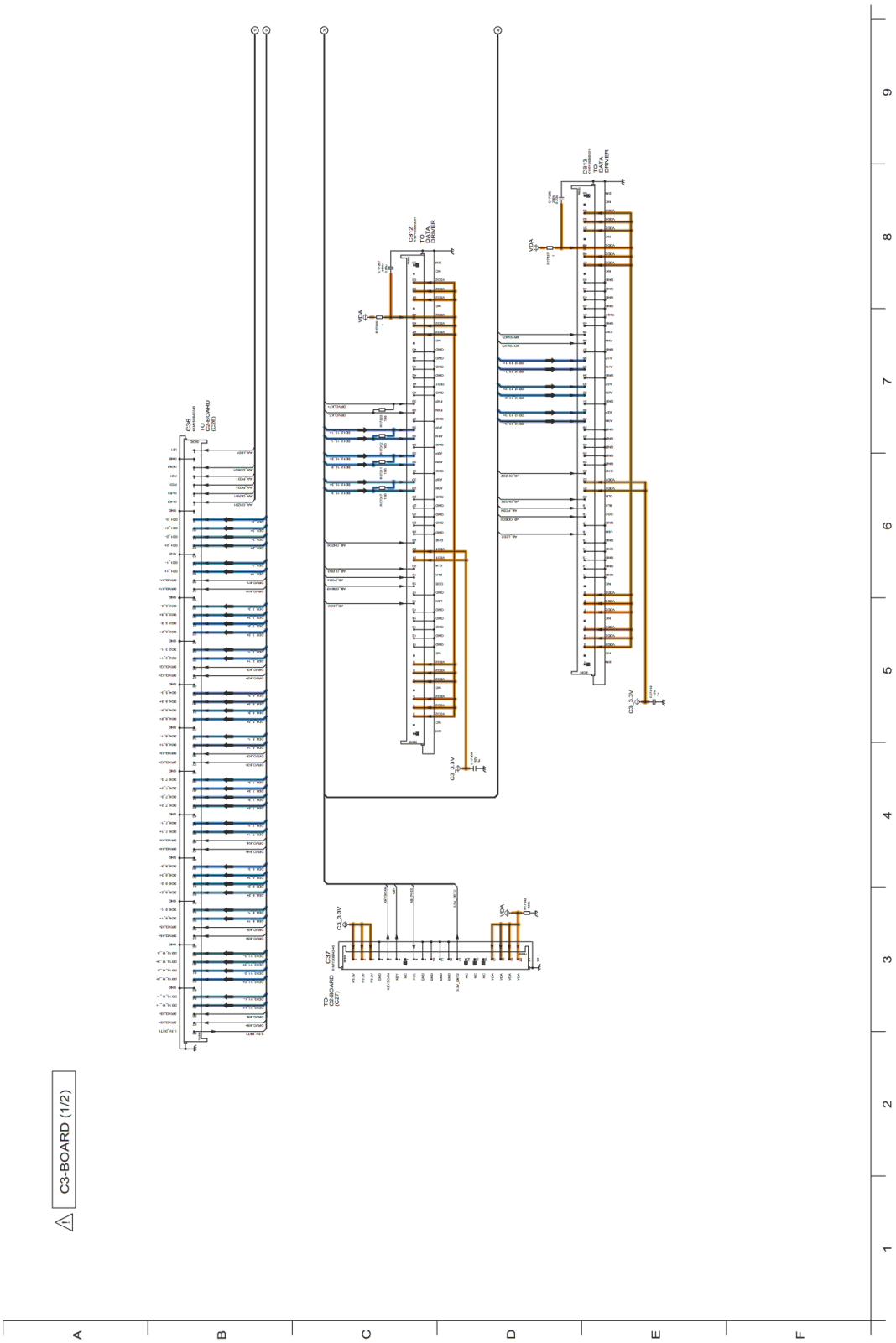
C3-BOARD (1/2)
C36
TO C1-BOARD (C36)
CB12
TO DATA DRIVER
CB13
TO DATA DRIVER
C37
TO C2-BOARD (C27)
C3_3V
VDA
A
B
C
D
E
F
1
2
3
4
5
6
7
8
9

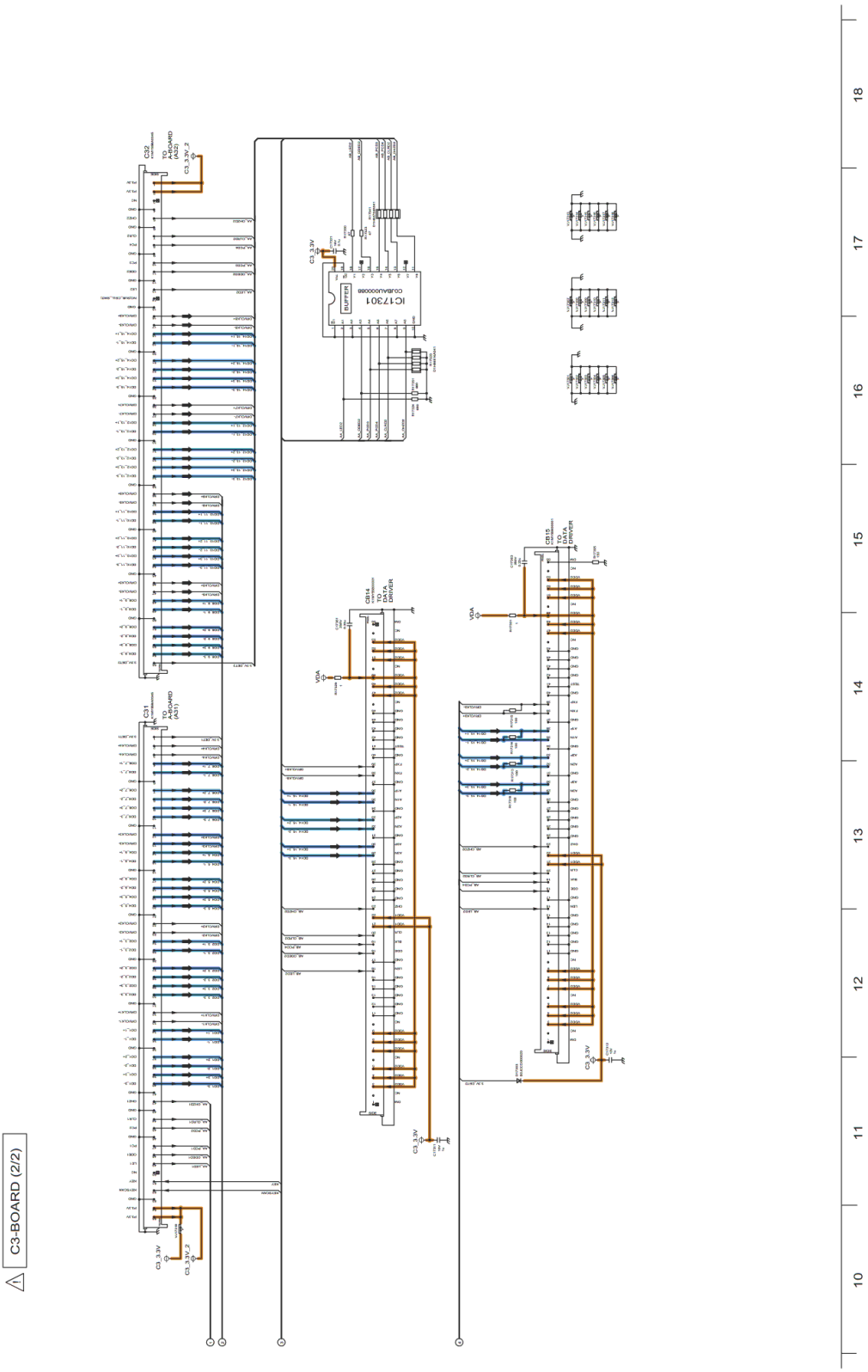
C3-BOARD (2/2)
C32
TO MAINBOARD (A32)
C31
TO MAINBOARD (A31)
C3_3.3V
C3_3.3V_2
IC17301
BUFFER
CD14
DATA DRIVER
CD15
DATA DRIVER
VGA
10
11
12
13
14
15
16
17
18

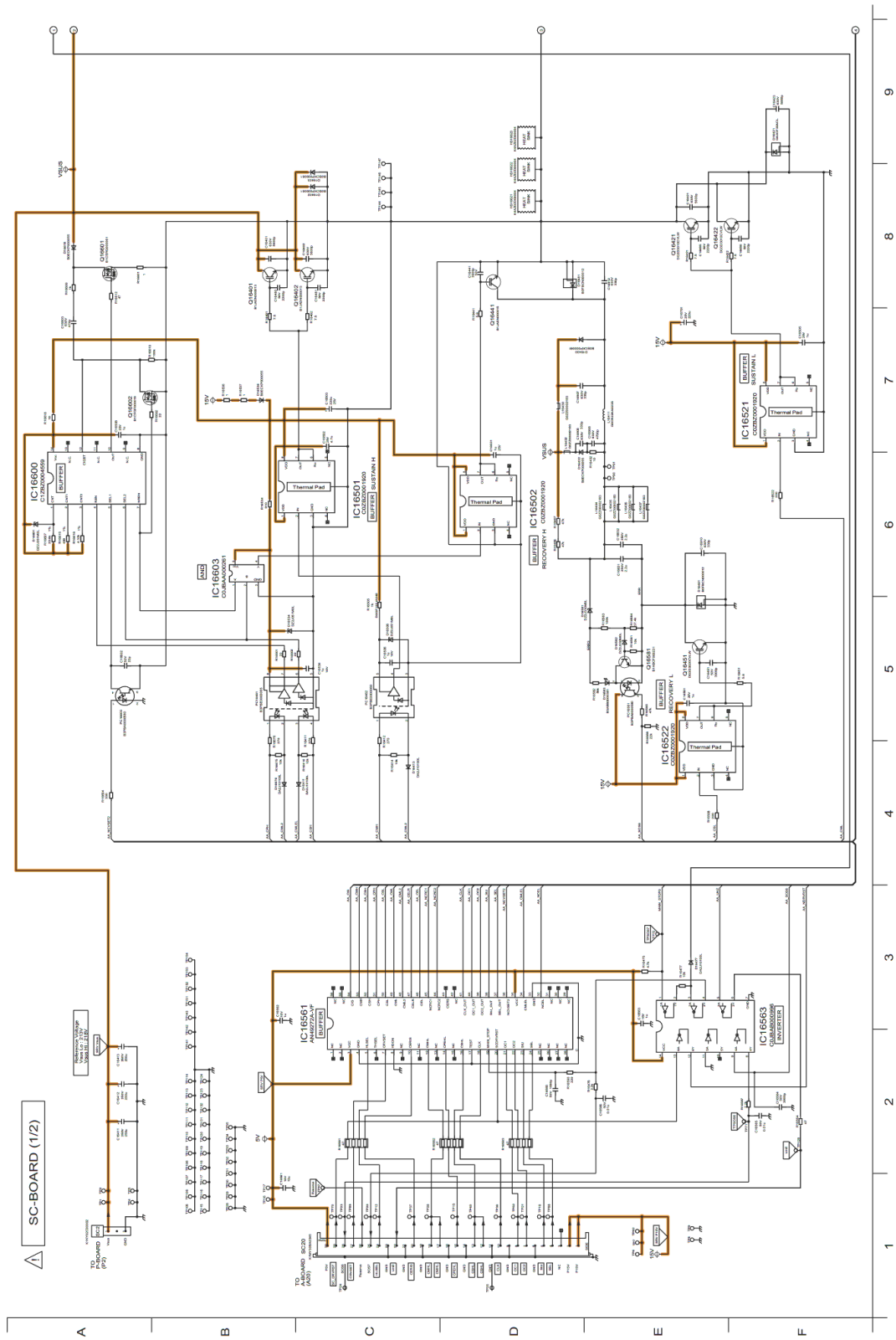
SC-BOARD (1/2)
IC16600
IC16601
IC16602
IC16603
IC16521
IC16522
IC16561
IC16563
Thermal Pad
BUFFER
INVERTER
SUSTAIN H
SUSTAIN L
RECOVERY H
RECOVERY L
TO P-BOARD (P2)
TO A-BOARD (A31)
A
B
C
D
E
F
1
2
3
4
5
6
7
8
9

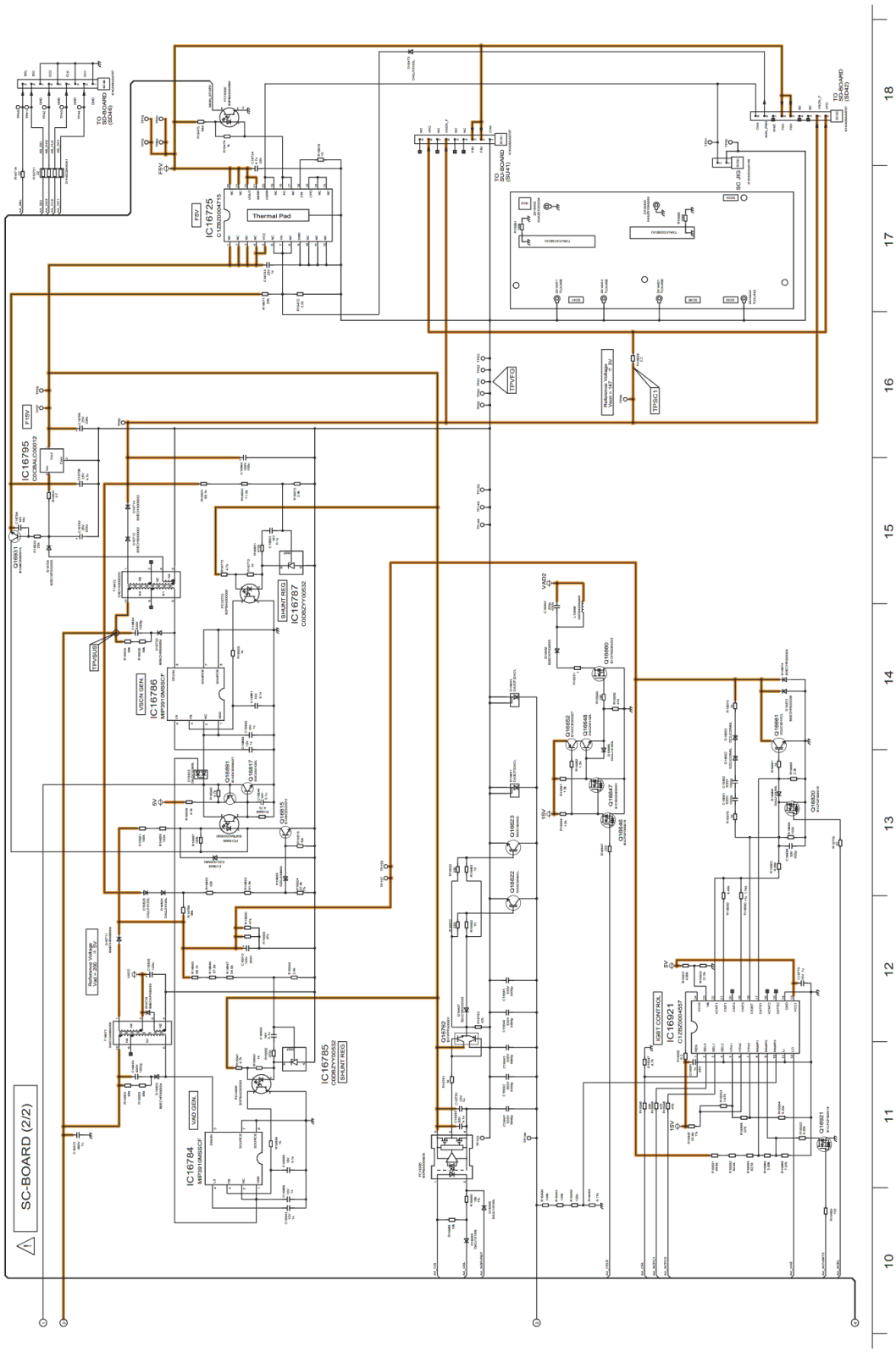
SC-BOARD (2/2)
IC16795
IC16786
IC16787
IC16785
IC16784
IC16725
IC16921
Thermal Pad
VSCN GEN.
VAD GEN.
SHUNT REG.
GATE CONTROL
TO SC-BOARD (SD46)
TO SC-BOARD (SD41)
TO SC-BOARD (SD42)
10
11
12
13
14
15
16
17
18

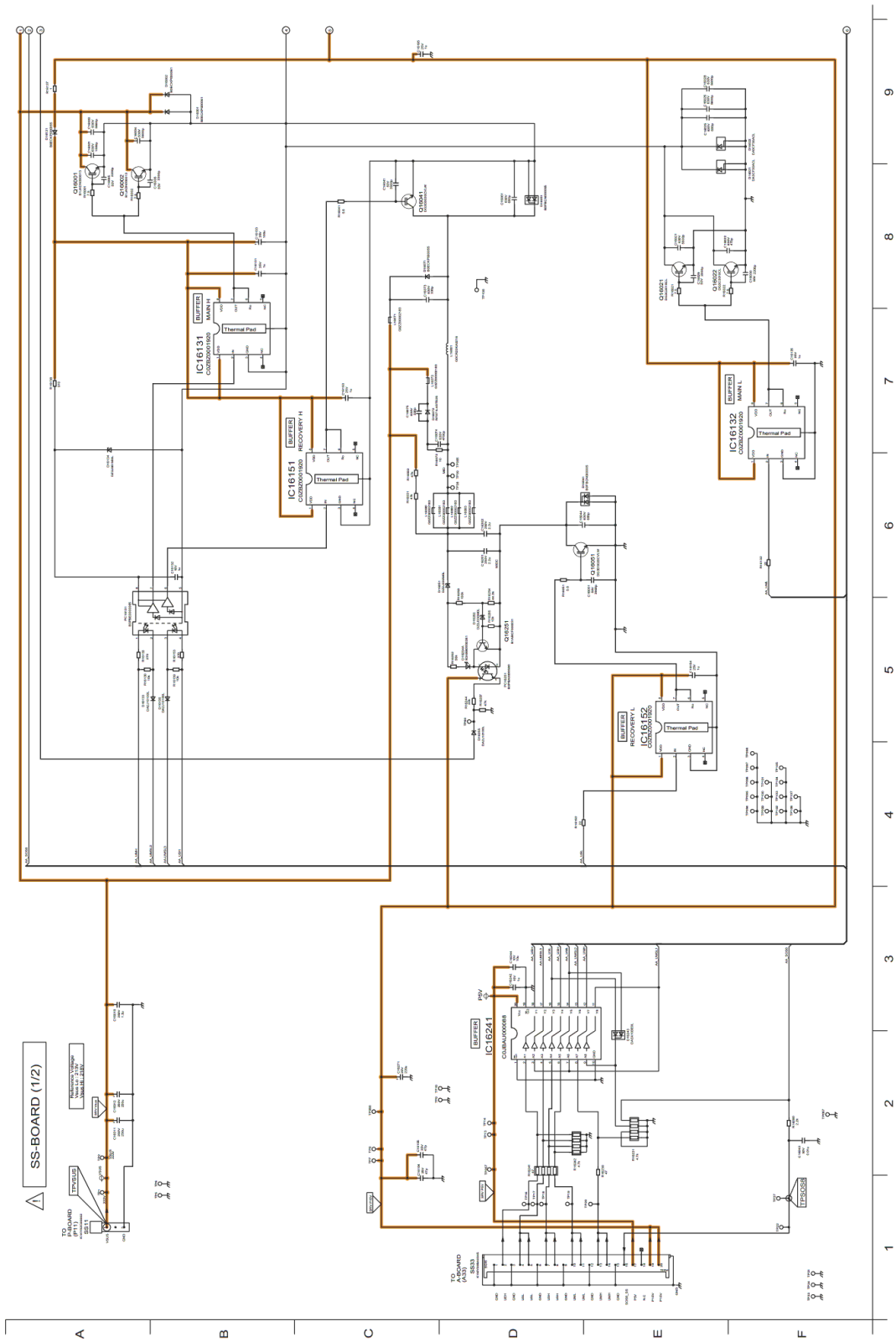
SS-BOARD (1/2)
IC16131
IC16151
IC16132
IC16152
IC16241
BUFFER
Thermal Pad
TO P-BOARD (PF11)
TO A-BOARD (CN3)
A
B
C
D
E
F
1
2
3
4
5
6
7
8
9

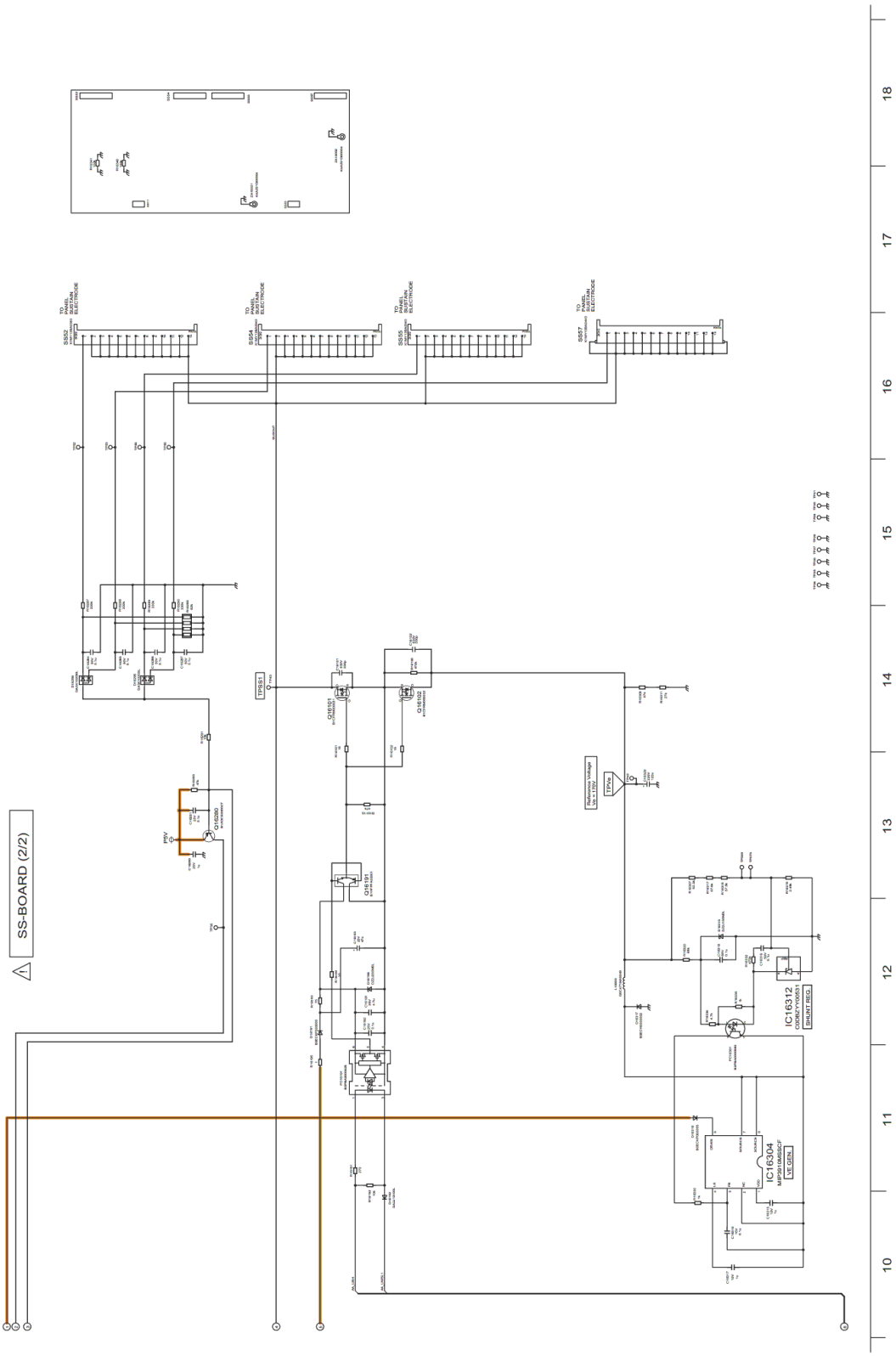
SS-BOARD (2/2)
SS02
SS04
SS05
SS07
Q16101
Q16102
Q16103
Q16200
IC16312
IC16304

Model No. : TH-P50UT50A/D/G/K/M/P/S/V/Z A-Board (Foil Side)

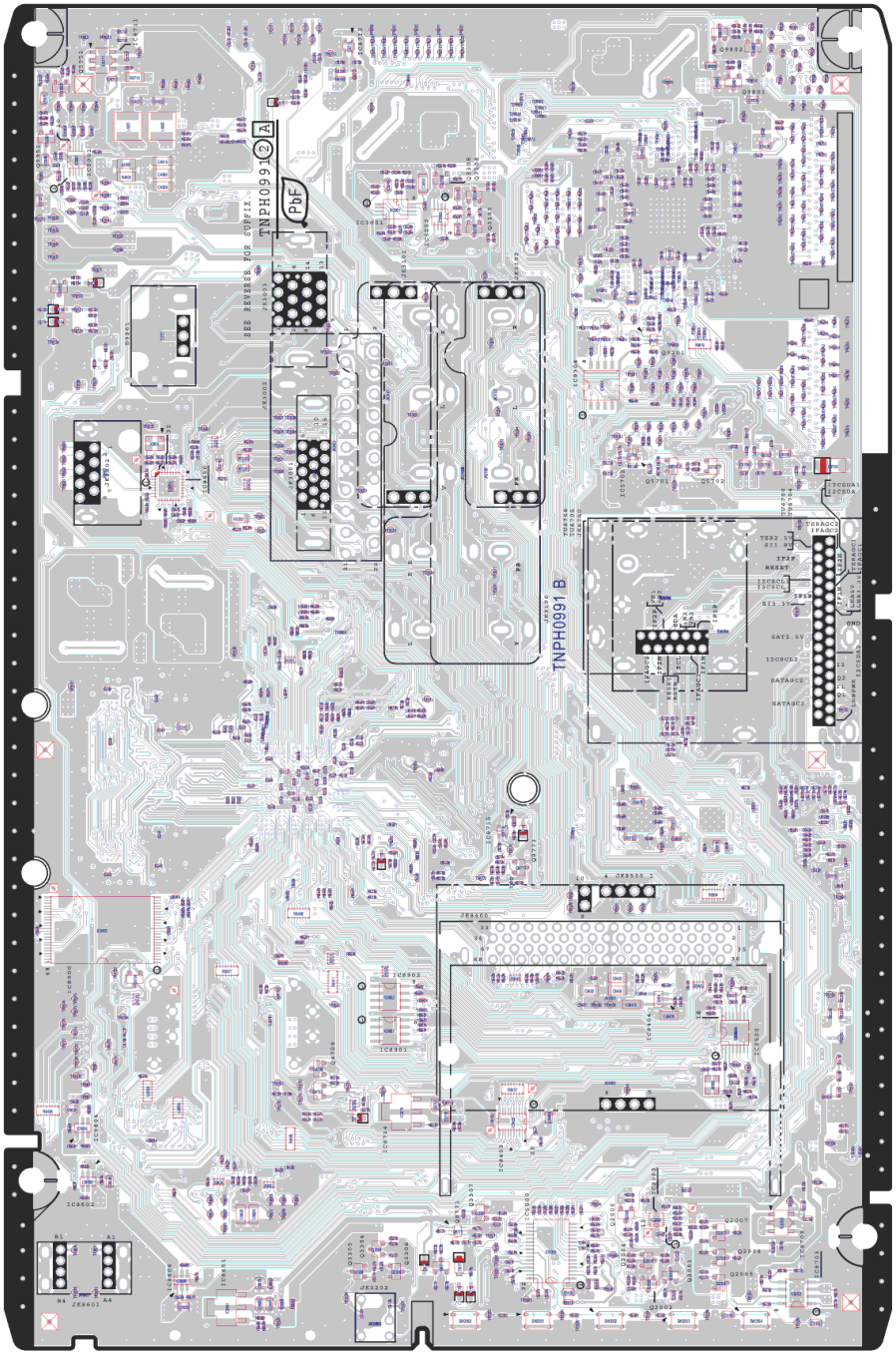

Model No. : TH-P50UT50A/D/G/K/M/P/S/V/Z A-Board (Component Side)

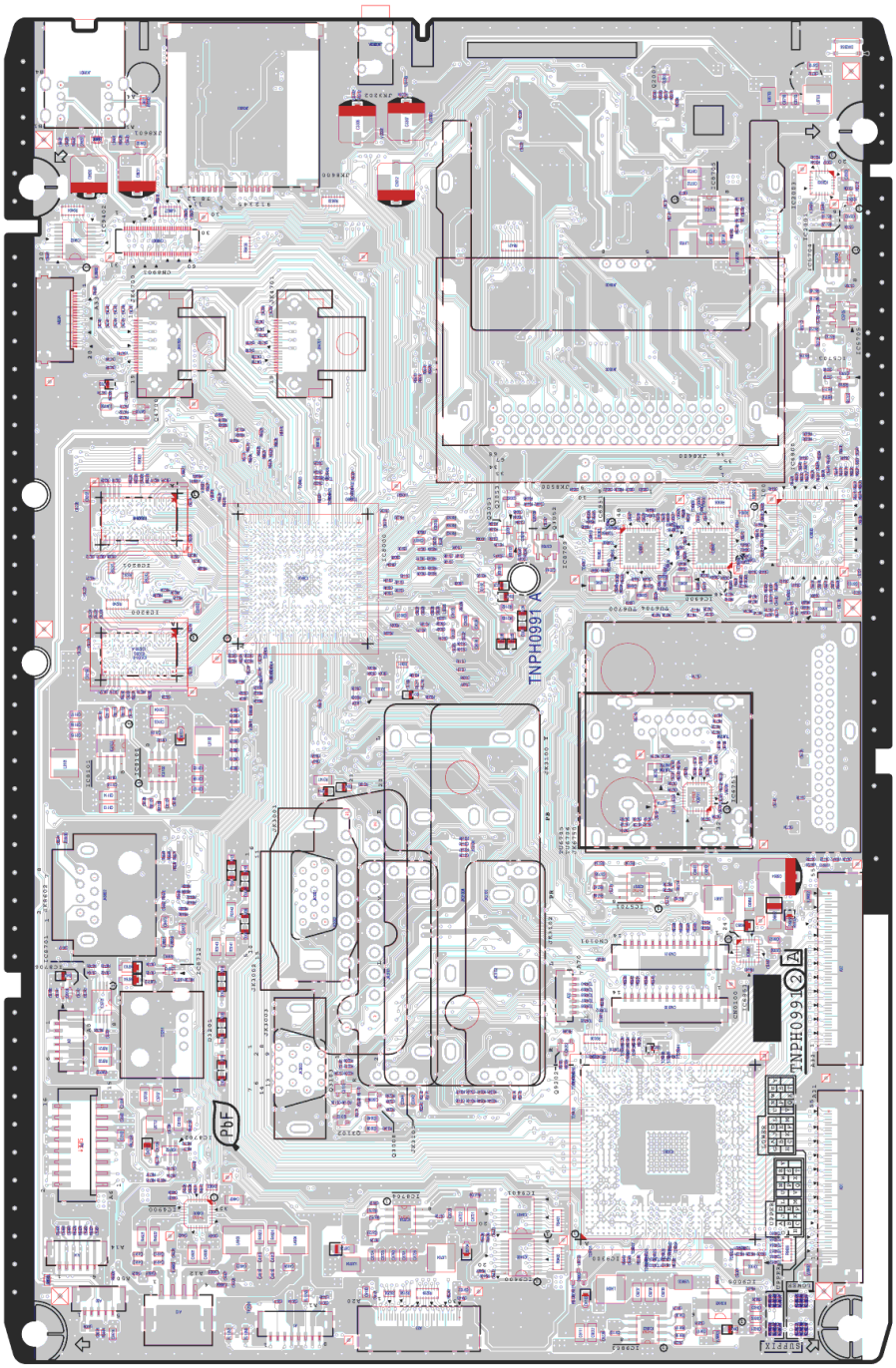

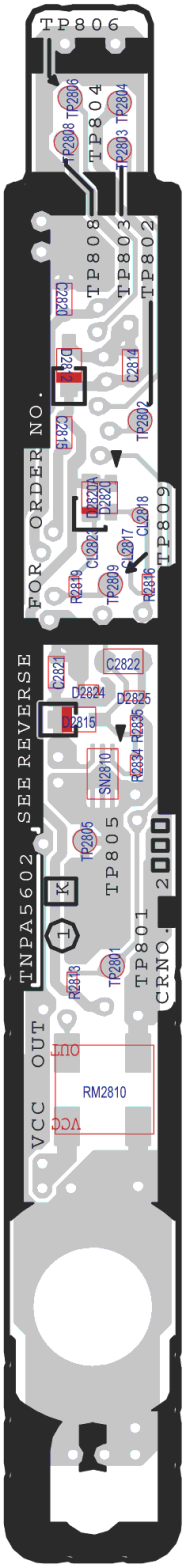
TP806
TP804
TP808
TP803
TP802
FOR ORDER NO.
TP809
TNPA5602 SEE REVERSE
TP805
TP801
CRNO. 2000
VCC OUT
RM2810

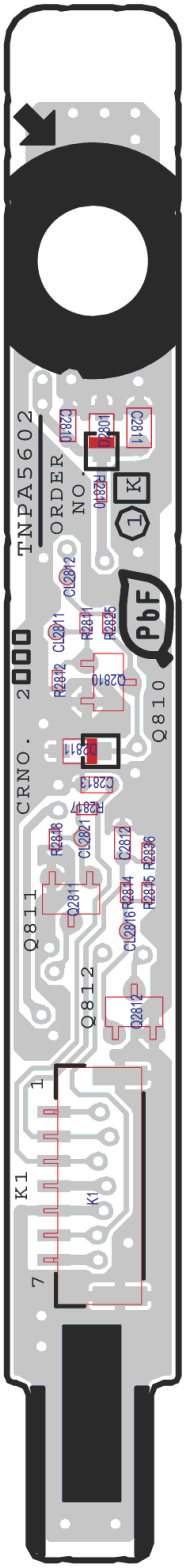
TNPA5602
ORDER NO.
CRNO. 2000
PbF
Q810
Q811
Q812
K1

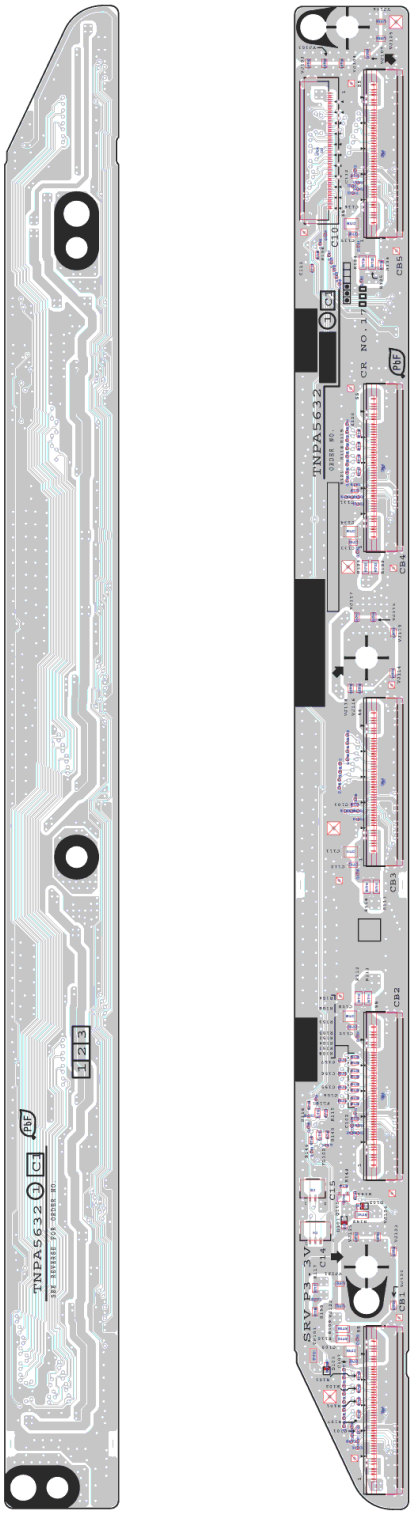
TNPA5632
C3
P&F
1 2 3
TNPA5632
C2
P&F
SRV_P3_3V
CB1
CB2
CB3
CB4
CB5
C14
C15
C16

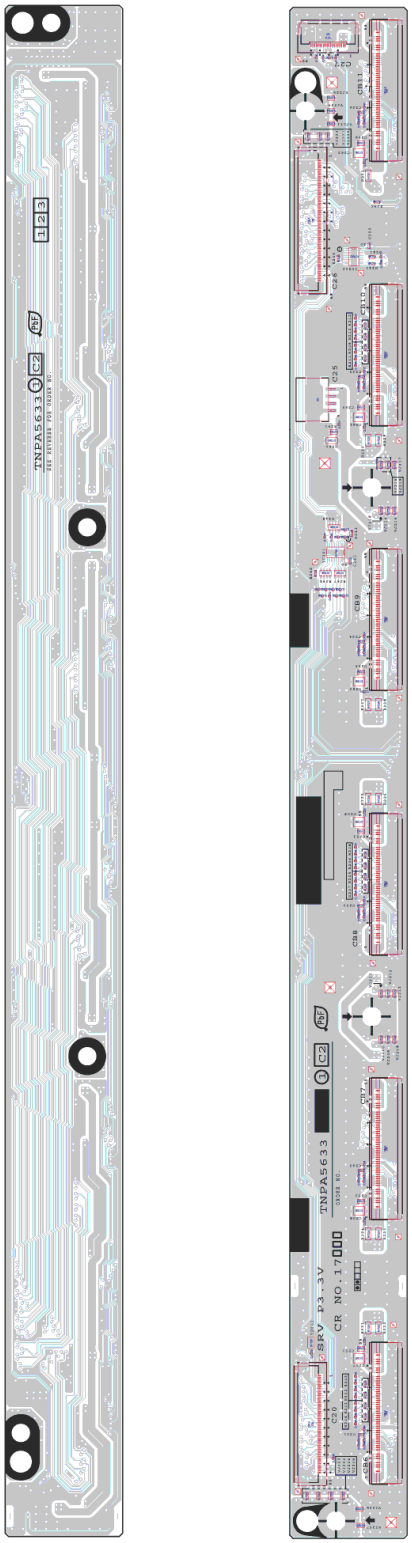
TNPA5633
C2
1 2 3
SRV P3.3V
CR NO.17000
TNPA5633
C2

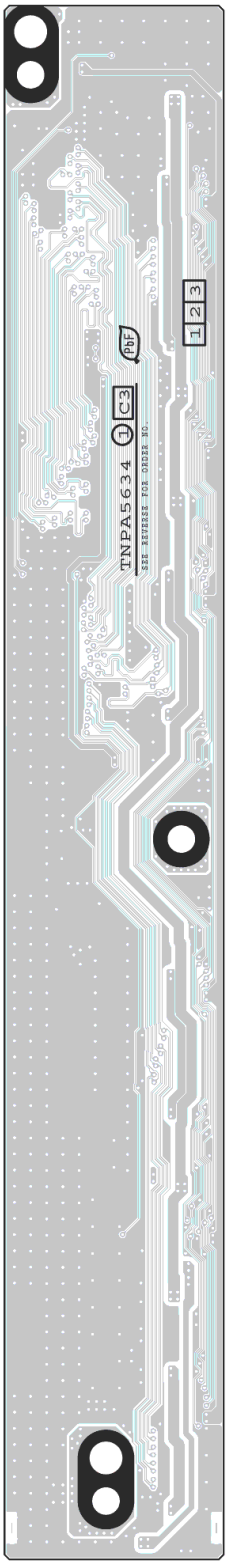
TNPA5634
C3
1
2
3
PbF
SEE REVERSE FOR ORDER NO.

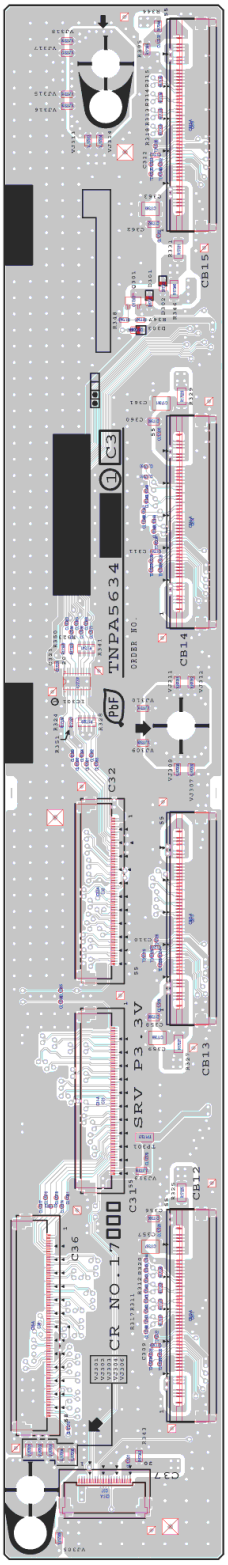
CR NO.17000
SRV P3.3V
TNPA5634
C3
PbF
CB12
CB13
CB14
CB15
C31
C32
C36

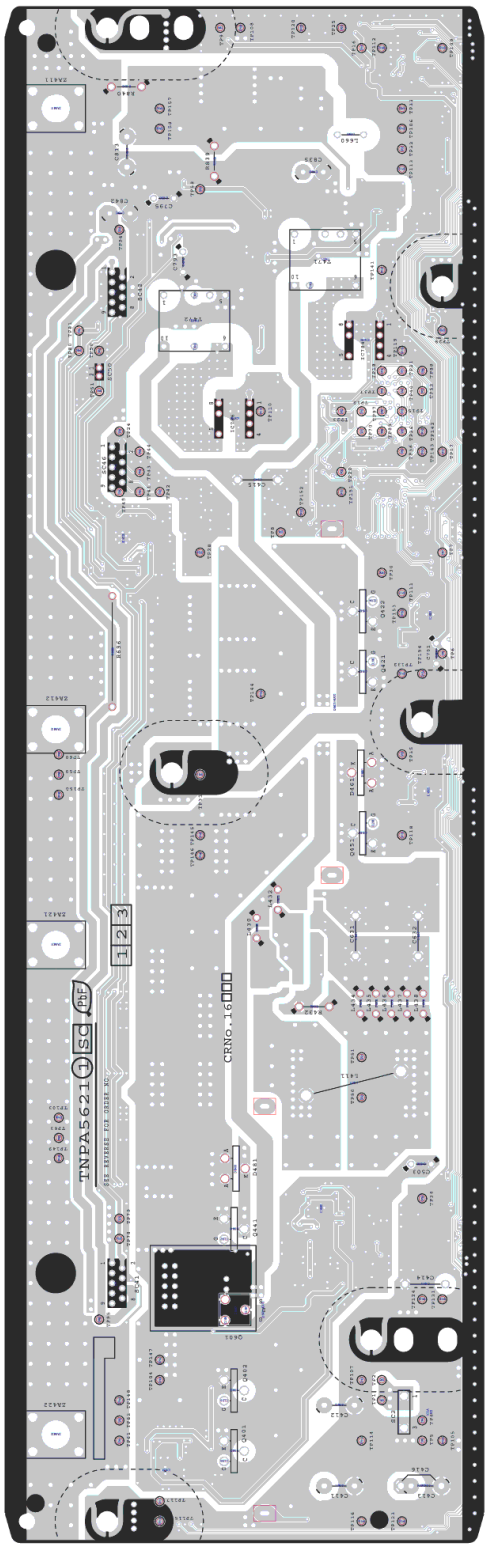
TNPA5621 SC PbF
CRNo.16
1 2 3

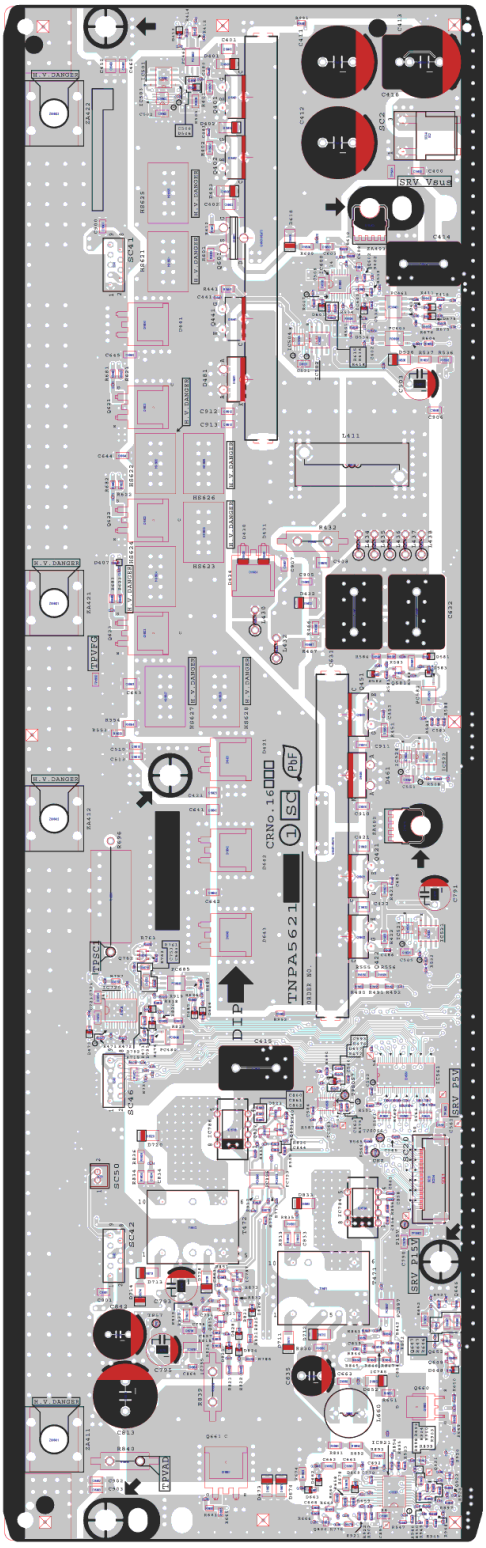
TNPA5621 SC PbF
CRNo.16
DIP
SRV Vsus
SRV P15V
SRV P5V
PPVFS
PPVAS
PPSC
SC42
SC40
SC20
SC41
SC43
SC44
SC45
SC46
SC47
SC48
SC49
SC50
SC51
SC52
SC53
SC54
SC55
SC56
SC57
SC58
SC59
SC60
SC61
SC62
SC63
SC64
SC65
SC66
SC67
SC68
SC69
SC70
SC71
SC72
SC73
SC74
SC75
SC76
SC77
SC78
SC79
SC80
SC81
SC82
SC83
SC84
SC85
SC86
SC87
SC88
SC89
SC90
SC91
SC92
SC93
SC94
SC95
SC96
SC97
SC98
SC99
SC100
SC101
SC102
SC103
SC104
SC105
SC106
SC107
SC108
SC109
SC110
SC111
SC112
SC113
SC114
SC115
SC116
SC117
SC118
SC119
SC120
SC121
SC122
SC123
SC124
SC125
SC126
SC127
SC128
SC129
SC130
SC131
SC132
SC133
SC134
SC135
SC136
SC137
SC138
SC139
SC140
SC141
SC142
SC143
SC144
SC145
SC146
SC147
SC148
SC149
SC150
SC151
SC152
SC153
SC154
SC155
SC156
SC157
SC158
SC159
SC160
SC161
SC162
SC163
SC164
SC165
SC166
SC167
SC168
SC169
SC170
SC171
SC172
SC173
SC174
SC175
SC176
SC177
SC178
SC179
SC180
SC181
SC182
SC183
SC184
SC185
SC186
SC187
SC188
SC189
SC190
SC191
SC192
SC193
SC194
SC195
SC196
SC197
SC198
SC199
SC200
SC201
SC202
SC203
SC204
SC205
SC206
SC207
SC208
SC209
SC210
SC211
SC212
SC213
SC214
SC215
SC216
SC217
SC218
SC219
SC220
SC221
SC222
SC223
SC224
SC225
SC226
SC227
SC228
SC229
SC230
SC231
SC232
SC233
SC234
SC235
SC236
SC237
SC238
SC239
SC240
SC241
SC242
SC243
SC244
SC245
SC246
SC247
SC248
SC249
SC250
SC251
SC252
SC253
SC254
SC255
SC256
SC257
SC258
SC259
SC260
SC261
SC262
SC263
SC264
SC265
SC266
SC267
SC268
SC269
SC270
SC271
SC272
SC273
SC274
SC275
SC276
SC277
SC278
SC279
SC280
SC281
SC282
SC283
SC284
SC285
SC286
SC287
SC288
SC289
SC290
SC291
SC292
SC293
SC294
SC295
SC296
SC297
SC298
SC299
SC300
SC301
SC302
SC303
SC304
SC305
SC306
SC307
SC308
SC309
SC310
SC311
SC312
SC313
SC314
SC315
SC316
SC317
SC318
SC319
SC320
SC321
SC322
SC323
SC324
SC325
SC326
SC327
SC328
SC329
SC330
SC331
SC332
SC333
SC334
SC335
SC336
SC337
SC338
SC339
SC340
SC341
SC342
SC343
SC344
SC345
SC346
SC347
SC348
SC349
SC350
SC351
SC352
SC353
SC354
SC355
SC356
SC357
SC358
SC359
SC360
SC361
SC362
SC363
SC364
SC365
SC366
SC367
SC368
SC369
SC370
SC371
SC372
SC373
SC374
SC375
SC376
SC377
SC378
SC379
SC380
SC381
SC382
SC383
SC384
SC385
SC386
SC387
SC388
SC389
SC390
SC391
SC392
SC393
SC394
SC395
SC396
SC397
SC398
SC399
SC400
SC401
SC402
SC403
SC404
SC405
SC406
SC407
SC408
SC409
SC410
SC411
SC412
SC413
SC414
SC415
SC416
SC417
SC418
SC419
SC420
SC421
SC422
SC423
SC424
SC425
SC426
SC427
SC428
SC429
SC430
SC431
SC432
SC433
SC434
SC435
SC436
SC437
SC438
SC439
SC440
SC441
SC442
SC443
SC444
SC445
SC446
SC447
SC448
SC449
SC450
SC451
SC452
SC453
SC454
SC455
SC456
SC457
SC458
SC459
SC460
SC461
SC462
SC463
SC464
SC465
SC466
SC467
SC468
SC469
SC470
SC471
SC472
SC473
SC474
SC475
SC476
SC477
SC478
SC479
SC480
SC481
SC482
SC483
SC484
SC485
SC486
SC487
SC488
SC489
SC490
SC491
SC492
SC493
SC494
SC495
SC496
SC497
SC498
SC499
SC500
SC501
SC502
SC503
SC504
SC505
SC506
SC507
SC508
SC509
SC510
SC511
SC512
SC513
SC514
SC515
SC516
SC517
SC518
SC519
SC520
SC521
SC522
SC523
SC524
SC525
SC526
SC527
SC528
SC529
SC530
SC531
SC532
SC533
SC534
SC535
SC536
SC537
SC538
SC539
SC540
SC541
SC542
SC543
SC544
SC545
SC546
SC547
SC548
SC549
SC550
SC551
SC552
SC553
SC554
SC555
SC556
SC557
SC558
SC559
SC560
SC561
SC562
SC563
SC564
SC565
SC566
SC567
SC568
SC569
SC570
SC571
SC572
SC573
SC574
SC575
SC576
SC577
SC578
SC579
SC580
SC581
SC582
SC583
SC584
SC585
SC586
SC587
SC588
SC589
SC590
SC591
SC592
SC593
SC594
SC595
SC596
SC597
SC598
SC599
SC600
SC601
SC602
SC603
SC604
SC605
SC606
SC607
SC608
SC609
SC610
SC611
SC612
SC613
SC614
SC615
SC616
SC617
SC618
SC619
SC620
SC621
SC622
SC623
SC624
SC625
SC626
SC627
SC628
SC629
SC630
SC631
SC632
SC633
SC634
SC635
SC636
SC637
SC638
SC639
SC640
SC641
SC642
SC643
SC644
SC645
SC646
SC647
SC648
SC649
SC650
SC651
SC652
SC653
SC654
SC655
SC656
SC657
SC658
SC659
SC660
SC661
SC662
SC663
SC664
SC665
SC666
SC667
SC668
SC669
SC670
SC671
SC672
SC673
SC674
SC675
SC676
SC677
SC678
SC679
SC680
SC681
SC682
SC683
SC684
SC685
SC686
SC687
SC688
SC689
SC690
SC691
SC692
SC693
SC694
SC695
SC696
SC697
SC698
SC699
SC700
SC701
SC702
SC703
SC704
SC705
SC706
SC707
SC708
SC709
SC710
SC711
SC712
SC713
SC714
SC715
SC716
SC717
SC718
SC719
SC720
SC721
SC722
SC723
SC724
SC725
SC726
SC727
SC728
SC729
SC730
SC731
SC732
SC733
SC734
SC735
SC736
SC737
SC738
SC739
SC740
SC741
SC742
SC743
SC744
SC745
SC746
SC747
SC748
SC749
SC750
SC751
SC752
SC753
SC754
SC755
SC756
SC757
SC758
SC759
SC760
SC761
SC762
SC763
SC764
SC765
SC766
SC767
SC768
SC769
SC770
SC771
SC772
SC773
SC774
SC775
SC776
SC777
SC778
SC779
SC780
SC781
SC782
SC783
SC784
SC785
SC786
SC787
SC788
SC789
SC790
SC791
SC792
SC793
SC794
SC795
SC796
SC797
SC798
SC799
SC800
SC801
SC802
SC803
SC804
SC805
SC806
SC807
SC808
SC809
SC810
SC811
SC812
SC813
SC814
SC815
SC816
SC817
SC818
SC819
SC820
SC821
SC822
SC823
SC824
SC825
SC826
SC827
SC828
SC829
SC830
SC831
SC832
SC833
SC834
SC835
SC836
SC837
SC838
SC839
SC840
SC841
SC842
SC843
SC844
SC845
SC846
SC847
SC848
SC849
SC850
SC851
SC852
SC853
SC854
SC855
SC856
SC857
SC858
SC859
SC860
SC861
SC862
SC863
SC864
SC865
SC866
SC867
SC868
SC869
SC870
SC871
SC872
SC873
SC874
SC875
SC876
SC877
SC878
SC879
SC880
SC881
SC882
SC883
SC884
SC885
SC886
SC887
SC888
SC889
SC890
SC891
SC892
SC893
SC894
SC895
SC896
SC897
SC898
SC899
SC900
SC901
SC902
SC903
SC904
SC905
SC906
SC907
SC908
SC909
SC910
SC911
SC912
SC913
SC914
SC915
SC916
SC917
SC918
SC919
SC920
SC921
SC922
SC923
SC924
SC925
SC926
SC927
SC928
SC929
SC930
SC931
SC932
SC933
SC934
SC935
SC936
SC937
SC938
SC939
SC940
SC941
SC942
SC943
SC944
SC945
SC946
SC947
SC948
SC949
SC950
SC951
SC952
SC953
SC954
SC955
SC956
SC957
SC958
SC959
SC960
SC961
SC962
SC963
SC964
SC965
SC966
SC967
SC968
SC969
SC970
SC971
SC972
SC973
SC974
SC975
SC976
SC977
SC978
SC979
SC980
SC981
SC982
SC983
SC984
SC985
SC986
SC987
SC988
SC989
SC990
SC991
SC992
SC993
SC994
SC995
SC996
SC997
SC998
SC999
SC1000

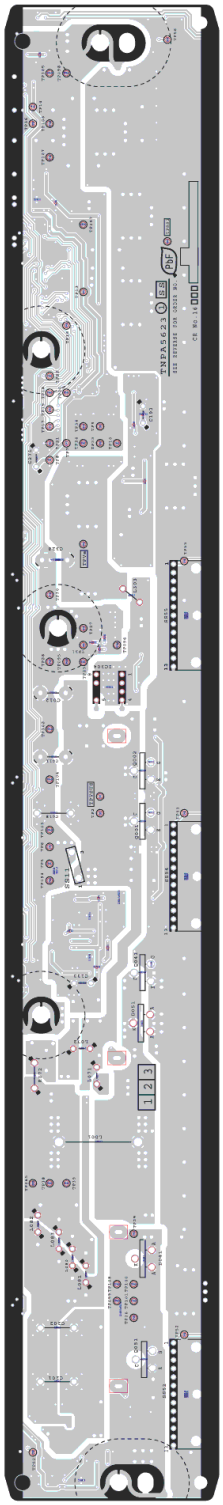

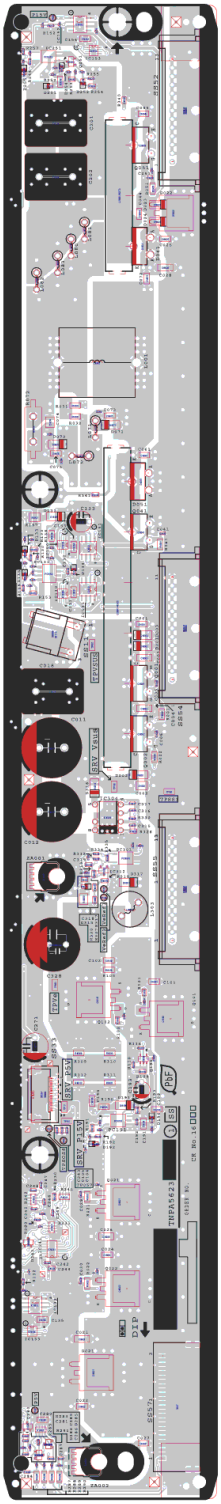

Model No. : TH-P50UT50A/D/G/K/M/P/S/V/Z Parts List

Safety	Ref. No.	Part No.	Part Name & Description	Q'ty	Remarks
⚠	PCB	TZTNP01PKUA	A-PRINT COMPLETE	1	(A) (RTL)PAVCTH
⚠	PCB	TZTNP01PCUZ	A-PRINT COMPLETE	1	(Z) (RTL)PAVCTH
⚠	PCB	TZTNP01PEUD	A-PRINT COMPLETE	1	(D) (RTL)PAVCTH
⚠	PCB	TZTNP01PJUG	A-PRINT COMPLETE	1	(G) (V) (RTL)PAVCTH
⚠	PCB	TZTNP01NMUK	A-PRINT COMPLETE	1	(K) (RTL)PAVCTH
⚠	PCB	TZTNP01NKUM	A-PRINT COMPLETE	1	(M) (RTL)PAVCTH
⚠	PCB	TZTNP01NZUP	A-PRINT COMPLETE	1	(P) (RTL)PAVCTH
⚠	PCB	TZTNP01PEUS	A-PRINT COMPLETE	1	(S) (RTL)PAVCTH
⚠	PCB	N0AE5KK00002	POWER SUPPLY UNIT	1	PAVCTH
⚠	PCB	TXNC11SDUU	C1-PRINT COMPLETE	1	(RTL)PAVCTH
⚠	PCB	TXNC21SDUU	C2-PRINT COMPLETE	1	(RTL)PAVCTH
⚠	PCB	TXNC31SDUU	C3-PRINT COMPLETE	1	(RTL)PAVCTH
⚠	PCB	TXNSC1SDUU	SC-PRINT COMPLETE	1	(RTL)PAVCTH
⚠	PCB	TXNSD1SDUU	SD-PRINT COMPLETE	1	PAVCTH
⚠	PCB	TXNSS1SDUU	SS-PRINT COMPLETE	1	(RTL)PAVCTH
⚠	PCB	TXNSU1SDUU	SU-PRINT COMPLETE	1	PAVCTH
⚠	PCB	TXN/K1QTUA	K-PRINT COMPLETE	1	(RTL)PAVCTH
	A1	K1KY08AA0719	8P CONNECTOR	1	
	A6	K1KY16BA0394	16P CONNECTOR	1	PAVCTH
	A12	K1KY04BA0387	4P CONNECTOR	1	PAVCTH
	A20	K1MY30BA0345	30P CONNECTOR	1	
	A31	K1MY55BA0345	55P CONNECTOR	1	
	A32	K1MY55BA0345	55P CONNECTOR	1	
	A33	K1MN20BA0231	20P CONNECTOR	1	
	A50	K1KY05AA0719	5P CONNECTOR	1	
	C10	K1MY55BA0345	55P CONNECTOR	1	
	C20	K1MY55BA0345	55P CONNECTOR	1	
	C25	K1KY04BA0387	4P CONNECTOR	1	PAVCTH
	C26	K1MY68BA0345	68P CONNECTOR	1	
	C27	K1MN20BA0231	20P CONNECTOR	1	
	C31	K1MY55BA0345	55P CONNECTOR	1	
	C32	K1MY55BA0345	55P CONNECTOR	1	
	C36	K1MY68BA0345	68P CONNECTOR	1	
	C37	K1MY20BA0345	20P CONNECTOR	1	
	C0902	F1G1H101A834	C 100PF 50V	1	PAVCTH
	C0903	F1G1H101A834	C 100PF 50V	1	PAVCTH
	C2000	F1G1E1030005	C 0.01UF 25V	1	
	C2001	F1J1A106A087	C 10UF, 10V	1	
	C2002	F1J1E105A287	C 1UF, 25V	1	PAVCTH
	C2003	F1J1E105A287	C 1UF, 25V	1	PAVCTH
	C2005	F1H1H104B047	C 0.1UF, 50V	1	PAVCTH
	C2006	F1G1C104A077	C 0.1UF 16V	1	
	C2007	F1G1A105A047	C 1UF 10V	1	
	C2008	F1G1A105A047	C 1UF 10V	1	
	C2009	F1G1E1030005	C 0.01UF 25V	1	
	C2010	F1G1A105A047	C 1UF 10V	1	
	C2013	F1G1E1030005	C 0.01UF 25V	1	
	C2014	F1G1E1030005	C 0.01UF 25V	1	
	C2018	F1G1H1020008	C 1000PF 50V	1	
	C2019	F1G1E1030005	C 0.01UF 25V	1	
	C2026	F1G1C104A077	C 0.1UF 16V	1	
	C2032	F1H0J4750004	C 4.7UF, 16V	1	
	C2050	F1J1H102A910	C 1000PF, 50V	1	PAVCTH
	C2052	F1J1H102A910	C 1000PF, 50V	1	PAVCTH
	C2810	F1H1H103B047	C 0.01UF, 50V	1	PAVCTH
	C2811	F1J1A106A087	C 10UF, 10V	1	
	C2815	F1H1H103B047	C 0.01UF, 50V	1	PAVCTH
	C2821	ECJ1XB1C104K	C 0.1UF, Z, 16V	1	
	C3040	F1J1A106A087	C 10UF, 10V	1	

Safety	Ref. No.	Part No.	Part Name & Description	Q'ty	Remarks
	C3042	F1J1A106A087	C 10UF, 10V	1	
	C3045	F1J1A106A110	C 10UF, 10V	1	PAVCTH
	C3046	F1G1A105A047	C 1UF 10V	1	
	C3047	F1G1A105A047	C 1UF 10V	1	
	C3050	F1K1E106A134	C 10UF, 25V	1	
	C3057	F1G1A105A047	C 1UF 10V	1	
	C3058	F1G1A105A047	C 1UF 10V	1	
	C3084	F1G1A105A047	C 1UF 10V	1	
	C3085	F1G1A105A047	C 1UF 10V	1	
	C3086	F1G1A105A047	C 1UF 10V	1	
	C3105	F1G1H471A834	C 470PF, 50V	1	PAVCTH
	C3106	F1G1H471A834	C 470PF, 50V	1	PAVCTH
	C3108	F1G1E333A059	C 0.033UF, 25V	1	PAVCTH
	C3109	F1G1E333A059	C 0.033UF, 25V	1	PAVCTH
	C3135	F1G1H471A834	C 470PF, 50V	1	PAVCTH
	C3136	F1G1H471A834	C 470PF, 50V	1	PAVCTH
	C3139	F1G1H471A834	C 470PF, 50V	1	PAVCTH
	C3140	F1G1H471A834	C 470PF, 50V	1	PAVCTH
	C3151	F1G1A105A047	C 1UF 10V	1	
	C3152	F1G1A105A047	C 1UF 10V	1	
	C3182	F1G1A105A047	C 1UF 10V	1	
	C3183	F1G1A105A047	C 1UF 10V	1	
	C3184	F1G1A105A047	C 1UF 10V	1	
	C3186	F1G1A105A047	C 1UF 10V	1	
	C3202	F1G1C104A077	C 0.1UF 16V	1	
	C3305	F2H1A101A040	C 100UF, 10V	1	
	C3307	F2H1A101A040	C 100UF, 10V	1	
	C4799	F1G1A105A047	C 1UF 10V	1	
	C4900	F1K1V106A010	C 10UF, 25V	1	PAVCTH
	C4901	F1K1V106A010	C 10UF, 25V	1	PAVCTH
	C4902	F1G1H1020008	C 1000PF 50V	1	
	C4903	F1G1C104A077	C 0.1UF 16V	1	
	C4904	F1G1C104A077	C 0.1UF 16V	1	
	C4905	F1G1C104A077	C 0.1UF 16V	1	
	C4906	F1G1C104A077	C 0.1UF 16V	1	
	C4907	F1K1V106A010	C 10UF, 25V	1	PAVCTH
	C4908	F1G1H1020008	C 1000PF 50V	1	
	C4909	F1K1V106A010	C 10UF, 25V	1	PAVCTH
	C4921	F1J1E474A272	C 4.7UF, 25V	1	PAVCTH
	C4922	F1J1E474A272	C 4.7UF, 25V	1	PAVCTH
	C4923	F1J1E474A272	C 4.7UF, 25V	1	PAVCTH
	C4924	F1J1E474A272	C 4.7UF, 25V	1	PAVCTH
	C5000	F1G1E1030005	C 0.01UF 25V	1	
	C5002	F1JZZ1060001	C 10UF, 20V	1	PAVCTH
	C5003	F1H1C105A145	C 1 uF 16 V	1	
	C5007	F1G1C104A077	C 0.1UF 16V	1	
	C5009	F1G1C104A077	C 0.1UF 16V	1	
	C5011	F1G1C104A077	C 0.1UF 16V	1	
	C5012	EEEHB1C101UP	C 100PF, J, 16V	1	
	C5013	F1G1A105A047	C 1UF 10V	1	
	C5014	F1G1A105A047	C 1UF 10V	1	
	C5015	F1G1A105A047	C 1UF 10V	1	
	C5016	F1G1A105A047	C 1UF 10V	1	
	C5017	F1G1A105A047	C 1UF 10V	1	
	C5018	F1G1C104A077	C 0.1UF 16V	1	
	C5020	F1G1E1030005	C 0.01UF 25V	1	
	C5712	F1G1A105A047	C 1UF 10V	1	
	C5713	F1G1A105A047	C 1UF 10V	1	
	C6704	F1J1A106A087	C 10UF, 10V	1	
	C6705	F1J1A106A110	C 10UF, 10V	1	PAVCTH
	C6706	F1G1C104A077	C 0.1UF 16V	1	
	C6707	F1G1C104A077	C 0.1UF 16V	1	

Safety	Ref. No.	Part No.	Part Name & Description	Q'ty	Remarks
	C6708	F1J1A106A087	C 10UF, 10V	1	
	C6710	F1G1C104A077	C 0.1UF 16V	1	
	C6719	F1G1H220A834	C 22PF, 50V	1	PAVCTH
	C6720	F1G1H220A834	C 22PF, 50V	1	PAVCTH
	C6721	F1G1H220A834	C 22PF, 50V	1	PAVCTH
	C6722	F1G1E472A144	C 4700pF 25V	1	PAVCTH
	C6723	F1G1H101A834	C 100PF 50V	1	PAVCTH
	C6724	F1G1H101A834	C 100PF 50V	1	PAVCTH
	C6725	F1G1H220A834	C 22PF, 50V	1	PAVCTH
	C6726	F1G1H220A834	C 22PF, 50V	1	PAVCTH
	C6727	F1G1H220A834	C 22PF, 50V	1	PAVCTH
	C6733	F1G1C104A077	C 0.1UF 16V	1	
	C6734	F1G1A105A047	C 1UF 10V	1	
	C6735	F1G1A105A047	C 1UF 10V	1	
	C6736	F1G1C104A077	C 0.1UF 16V	1	
	C6742	F1G1C104A077	C 0.1UF 16V	1	
	C6743	F1G1C104A077	C 0.1UF 16V	1	
	C8002	F1J1A106A087	C 10UF, 10V	1	
	C8004	F1G1C104A077	C 0.1UF 16V	1	
	C8005	F1G1C104A077	C 0.1UF 16V	1	
	C8007	F1J1A106A087	C 10UF, 10V	1	
	C8014	F1J0G2260001	C 22 UF 4 V	1	
	C8017	F1G1C104A077	C 0.1UF 16V	1	
	C8019	F1G1C104A077	C 0.1UF 16V	1	
	C8020	F1G1C104A077	C 0.1UF 16V	1	
	C8022	F1G1C104A077	C 0.1UF 16V	1	
	C8023	F1G1C104A077	C 0.1UF 16V	1	
	C8024	F1G1C104A077	C 0.1UF 16V	1	
	C8025	F1G1A105A047	C 1UF 10V	1	
	C8031	F1J1A106A087	C 10UF, 10V	1	
	C8033	F1J1A106A087	C 10UF, 10V	1	
	C8034	F1J0G2260001	C 22 UF 4 V	1	
	C8035	F1G1C104A077	C 0.1UF 16V	1	
	C8036	F1G1A105A047	C 1UF 10V	1	
	C8038	F1J0G2260001	C 22 UF 4 V	1	
	C8039	F1J0G2260001	C 22 UF 4 V	1	
	C8100	F1G1C223A146	C 0.022UF, 16V	1	PAVCTH
	C8101	F1H1C105A145	C 1 uF 16 V	1	
	C8102	F1G1C104A077	C 0.1UF 16V	1	
	C8103	F1K1E106A134	C 10UF, 25V	1	
	C8105	F1J0G2260001	C 22 UF 4 V	1	
	C8106	F1J0G2260001	C 22 UF 4 V	1	
	C8108	ECJ1VB1E104K	C 0.1 UF, 25V	1	
	C8110	F1G1C223A146	C 0.022UF, 16V	1	PAVCTH
	C8111	F1H1C105A145	C 1 uF 16 V	1	
	C8112	F1G1C104A077	C 0.1UF 16V	1	
	C8113	F1K1E106A134	C 10UF, 25V	1	
	C8115	F1J0G2260001	C 22 UF 4 V	1	
	C8116	F1J0G2260001	C 22 UF 4 V	1	
	C8118	ECJ1VB1E104K	C 0.1 UF, 25V	1	
	C8203	F1G1C104A077	C 0.1UF 16V	1	
	C8204	F1G1C104A077	C 0.1UF 16V	1	
	C8205	F1G1C104A077	C 0.1UF 16V	1	
	C8206	F1G1C104A077	C 0.1UF 16V	1	
	C8207	F1J1A106A087	C 10UF, 10V	1	
	C8208	F1G1C104A077	C 0.1UF 16V	1	
	C8210	F1G1C104A077	C 0.1UF 16V	1	
	C8212	F1G1C104A077	C 0.1UF 16V	1	
	C8215	F1G1C104A077	C 0.1UF 16V	1	
	C8216	F1J1A106A087	C 10UF, 10V	1	
	C8218	F1G1C104A077	C 0.1UF 16V	1	
	C8220	F1G1C104A077	C 0.1UF 16V	1	

Safety	Ref. No.	Part No.	Part Name & Description	Q'ty	Remarks
	C8221	F1G1C104A077	C 0.1UF 16V	1	
	C8224	F1G1C104A077	C 0.1UF 16V	1	
	C8229	F1G1A105A047	C 1UF 10V	1	
	C8230	F1G1C104A077	C 0.1UF 16V	1	
	C8231	F1G1C104A077	C 0.1UF 16V	1	
	C8232	F1G1C104A077	C 0.1UF 16V	1	
	C8300	F1G1H100A833	C 10PF 50V	1	PAVCTH
	C8301	F1G1H100A833	C 10PF 50V	1	PAVCTH
	C8304	F1G1A105A047	C 1UF 10V	1	
	C8305	F1G1A105A047	C 1UF 10V	1	
	C8306	F1G1A105A047	C 1UF 10V	1	
	C8307	F1G1A105A047	C 1UF 10V	1	
	C8308	F1G1A105A047	C 1UF 10V	1	
	C8309	F1G1A105A047	C 1UF 10V	1	
	C8310	F1G1A105A047	C 1UF 10V	1	
	C8311	F1G1A105A047	C 1UF 10V	1	
	C8312	F1G1A105A047	C 1UF 10V	1	
	C8411	F1G1C104A077	C 0.1UF 16V	1	
	C8616	F1G1C104A077	C 0.1UF 16V	1	
	C8617	F1G1C1030008	C 0.01UF 16V	1	
	C8619	F1G1C104A077	C 0.1UF 16V	1	
	C8620	F1G1C104A077	C 0.1UF 16V	1	
	C8627	F1G1C104A077	C 0.1UF 16V	1	
	C8628	F1K0J226A049	C 22UF, 6.3V	1	
	C8629	F1K0J226A049	C 22UF, 6.3V	1	
	C8630	EEEHB0J221UP	E 220UF, 6.3V	1	
	C8631	EEEHB0J221UP	E 220UF, 6.3V	1	
	C8632	F1J1A106A087	C 10UF, 10V	1	
	C8633	F1G1C104A077	C 0.1UF 16V	1	
	C8637	F1J1A106A087	C 10UF, 10V	1	
	C8638	F1G1C104A077	C 0.1UF 16V	1	
	C8639	F1J1A106A087	C 10UF, 10V	1	
	C8640	F1G1C104A077	C 0.1UF 16V	1	
	C8644	F1G1C1030008	C 0.01UF 16V	1	
	C8652	F1G1C104A077	C 0.1UF 16V	1	
	C8653	F1G1H7R0A833	C 7 PF, 50V	1	PAVCTH
	C8654	F1G1H8R0A831	C 8 PF, 50V	1	PAVCTH
	C8655	F1G1C104A077	C 0.1UF 16V	1	
	C8658	F1J1A106A087	C 10UF, 10V	1	
	C8659	F1G1C104A077	C 0.1UF 16V	1	
	C8674	F1G1C104A077	C 0.1UF 16V	1	
	C8675	F1G1C104A077	C 0.1UF 16V	1	
	C8676	F1G1C104A077	C 0.1UF 16V	1	
	C8721	F1K1E106A134	C 10UF, 25V	1	
	C8722	F1K1E106A134	C 10UF, 25V	1	
	C8723	ECJ1VB1E104K	C 0.1 UF, 25V	1	
	C8724	F1J1A106A110	C 10UF, 10V	1	PAVCTH
	C8725	F1J1A106A110	C 10UF, 10V	1	PAVCTH
	C8728	F1H1C105A145	C 1 uF 16 V	1	
	C8729	F1G1E472A086	C 4700pF 25V	1	
	C8730	F1G1C104A077	C 0.1UF 16V	1	
	C8731	F1G1E1030005	C 0.01UF 25V	1	
	C8732	F1K1V106A010	C 10UF, 25V	1	PAVCTH
	C8733	F1J1A106A110	C 10UF, 10V	1	PAVCTH
	C8734	F1J1A106A110	C 10UF, 10V	1	PAVCTH
	C8737	F1G1C104A077	C 0.1UF 16V	1	
	C8738	F1G1H222A830	C 2200PF, 50V	1	PAVCTH
	C8739	F1G1E1030005	C 0.01UF 25V	1	
	C8747	F1G1A105A047	C 1UF 10V	1	
	C8748	F1H0J4750004	C 4.7UF, 16V	1	
	C8749	F1G1A105A047	C 1UF 10V	1	
	C8750	F1G1A105A047	C 1UF 10V	1	

Safety	Ref. No.	Part No.	Part Name & Description	Q'ty	Remarks
	C8757	F1J1A106A087	C 10UF, 10V	1	
	C8758	F1J1A106A087	C 10UF, 10V	1	
	C8771	F1G1C104A077	C 0.1UF 16V	1	
	C8772	F1G1C104A077	C 0.1UF 16V	1	
	C8773	F1G1C104A077	C 0.1UF 16V	1	
	C8790	F1J1A106A110	C 10UF, 10V	1	PAVCTH
	C8791	F1J1A106A110	C 10UF, 10V	1	PAVCTH
	C8900	F1G1C104A077	C 0.1UF 16V	1	
	C8901	F1G1C104A077	C 0.1UF 16V	1	
	C8902	F1G1C104A077	C 0.1UF 16V	1	
	C9097	F1J1A106A110	C 10UF, 10V	1	PAVCTH
	C9098	F1G1A105A047	C 1UF 10V	1	
	C9102	F1JZZ1060001	C 10UF, 20V	1	PAVCTH
	C9103	F1G1E1030005	C 0.01UF 25V	1	
	C9111	F1K1E106A134	C 10UF, 25V	1	
	C9119	ECJ1VB1E104K	C 0.1 UF, 25V	1	
	C9120	F1H1C105A145	C 1 uF 16 V	1	
	C9121	F1G1H1020008	C 1000PF 50V	1	
	C9222	F1K1E106A134	C 10UF, 25V	1	
	C9235	ECJ1VB1E104K	C 0.1 UF, 25V	1	
	C9237	F1K0J226A049	C 22UF, 6.3V	1	
	C9238	F1K0J226A049	C 22UF, 6.3V	1	
	C9300	F1G1C104A077	C 0.1UF 16V	1	
	C9301	F1G1H180A834	C 18PF, 50V	1	PAVCTH
	C9302	F1G1H180A834	C 18PF, 50V	1	PAVCTH
	C9307	F1G1C104A077	C 0.1UF 16V	1	
	C9328	F1G1C104A077	C 0.1UF 16V	1	
	C9331	F1G1A105A047	C 1UF 10V	1	
	C9362	F1G1C104A077	C 0.1UF 16V	1	
	C9374	F1G1A105A047	C 1UF 10V	1	
	C9390	F1G1C104A077	C 0.1UF 16V	1	
	C9406	F1G1C104A077	C 0.1UF 16V	1	
	C9420	F1G1C104A077	C 0.1UF 16V	1	
	C9421	F1G1C104A077	C 0.1UF 16V	1	
	C9422	F1G1C104A077	C 0.1UF 16V	1	
	C9423	F1G1C104A077	C 0.1UF 16V	1	
	C9424	F1G1A105A047	C 1UF 10V	1	
	C9431	F1G1A105A047	C 1UF 10V	1	
	C9433	F1G1A105A047	C 1UF 10V	1	
	C9435	F1G1A105A047	C 1UF 10V	1	
	C9436	F1G1A105A047	C 1UF 10V	1	
	C9438	F1G1A105A047	C 1UF 10V	1	
	C9441	F1G1A105A047	C 1UF 10V	1	
	C9446	F1G1C104A077	C 0.1UF 16V	1	
	C9450	F1J1A106A110	C 10UF, 10V	1	PAVCTH
	C9453	F1J1A106A110	C 10UF, 10V	1	PAVCTH
	C9456	F1J1A106A110	C 10UF, 10V	1	PAVCTH
	C9458	F1J1A106A110	C 10UF, 10V	1	PAVCTH
	C9459	F1G1A105A047	C 1UF 10V	1	
	C9462	F1J1A106A110	C 10UF, 10V	1	PAVCTH
	C9591	F1G1C104A077	C 0.1UF 16V	1	
	C9817	F1J1A106A087	C 10UF, 10V	1	
	C9822	F1J1A106A087	C 10UF, 10V	1	
	C9824	F1G1A105A047	C 1UF 10V	1	
	C9825	F1J1A106A087	C 10UF, 10V	1	
	C9826	F1G1C104A077	C 0.1UF 16V	1	
	C16001	F1K2J152A024	C 1500PF, 630V	1	PAVCTH
	C16003	F1L2J562A022	C 5600PF, 630V	1	
	C16004	F1L2J562A022	C 5600PF, 630V	1	
	C16005	F1H1H222A219	C 2200PF, 50V	1	
	C16006	F1H1H222A219	C 2200PF, 50V	1	
	C16011	F2A2E251A183	E 250UF, 250V	1	

Safety	Ref. No.	Part No.	Part Name & Description	Q'ty	Remarks
	C16012	F2A2E251A183	E 250UF, 250V	1	
	C16018	F0C2E155A286	C 1.5UF, 250V	1	PAVCTH
	C16021	F1L2J562A022	C 5600PF, 630V	1	
	C16022	F1K2J471A042	C 470PF, 630V	1	PAVCTH
	C16025	F1K2J681A039	C 680PF, 630V	1	PAVCTH
	C16026	F1L2J562A022	C 5600PF, 630V	1	
	C16028	F1L2J562A022	C 5600PF, 630V	1	
	C16029	F1H1H222A219	C 2200PF, 50V	1	
	C16030	F1H1H222A219	C 2200PF, 50V	1	
	C16041	ECJ1VB1H392K	C 3900UF, 50V	1	
	C16044	F1K2J681A039	C 680PF, 630V	1	PAVCTH
	C16051	ECJ1VB1H392K	C 3900UF, 50V	1	
	C16061	F1K2J681A039	C 680PF, 630V	1	PAVCTH
	C16073	F1K2J331A042	C 330PF, 630V	1	PAVCTH
	C16074	F1L2J472A021	C 4700PF, 630V	1	PAVCTH
	C16075	F1K2J331A042	C 330PF, 630V	1	PAVCTH
	C16101	F1K2J331A042	C 330PF, 630V	1	PAVCTH
	C16102	F1K2J331A042	C 330PF, 630V	1	PAVCTH
	C16104	F1H1E470A130	C 47PF, 25V	1	
	C16105	F1H1E470A130	C 47PF, 25V	1	
	C16131	F1K1E105A029	C 1UF, 25V	1	
	C16132	F1H1C105A145	C 1 uF 16 V	1	
	C16133	F2A1E101A089	E 100UF 25V	1	
	C16135	F1K1E105A029	C 1UF, 25V	1	
	C16153	F1K1E105A029	C 1UF, 25V	1	
	C16154	F1K1E105A029	C 1UF, 25V	1	
	C16191	F1K1E475A134	C 4.7UF 25V	1	
	C16192	ECJ1VB1E104K	C 0.1 UF, 25V	1	
	C16193	F2A1E470B725	E 47UF, 25V	1	PAVCTH
	C16195	F1K1E105A029	C 1UF, 25V	1	
	C16201	F0C2E225A286	C 2.2UF, 250V	1	PAVCTH
	C16202	F0C2E225A286	C 2.2UF, 250V	1	PAVCTH
	C16242	F1H1C105A145	C 1 uF 16 V	1	
	C16243	ECJ1VB1H103K	C 0.01UF, 50V	1	
	C16244	F1J1A106A087	C 10UF, 10V	1	
	C16271	F2A1E221B726	E 220UF, 25V	1	PAVCTH
	C16280	F1K1E105A029	C 1UF, 25V	1	
	C16281	ECJ1VB1E104K	C 0.1 UF, 25V	1	
	C16284	F1H1H104A913	C 0.1UF, K , 50V	1	
	C16285	F1H1H104A913	C 0.1UF, K , 50V	1	
	C16286	F1H1H104A913	C 0.1UF, K , 50V	1	
	C16287	F1H1H104A913	C 0.1UF, K , 50V	1	
	C16315	ECJ1VB1A105K	C 1UF, 10V	1	
	C16316	ECJ1XB1C104K	C 0.1UF, Z, 16V	1	
	C16317	ECJ1VB1A105K	C 1UF, 10V	1	
	C16318	F1J1H104A717	C 0.1UF, 50V	1	
	C16319	F1J1H104A717	C 0.1UF, 50V	1	
	C16328	F2A2T1210001	E 120UF, 220V	1	
	C16401	F1L2J562A021	C 5600PF, 630V	1	PAVCTH
	C16402	F1L2J562A021	C 5600PF, 630V	1	PAVCTH
	C16411	F2A2E251A183	E 250UF, 250V	1	
	C16412	F2A2E251A183	E 250UF, 250V	1	
	C16413	F2A2E251A183	E 250UF, 250V	1	
	C16415	F0C2E105A286	C 1 UF 250 V	1	PAVCTH
	C16421	F1L2J562A021	C 5600PF, 630V	1	PAVCTH
	C16423	F1L2J562A021	C 5600PF, 630V	1	PAVCTH
	C16441	ECJ1VB1H392K	C 3900UF, 50V	1	
	C16451	ECJ1VB1H392K	C 3900UF, 50V	1	
	C16480	F1H1H222A219	C 2200PF, 50V	1	
	C16481	F1H1H222A219	C 2200PF, 50V	1	
	C16485	F1H1H222A219	C 2200PF, 50V	1	
	C16486	F1H1H222A219	C 2200PF, 50V	1	

Safety	Ref. No.	Part No.	Part Name & Description	Q'ty	Remarks
	C16502	F1K1E475A134	C 4.7UF 25V	1	
	C16503	F2A1E221B726	E 220UF, 25V	1	PAVCTH
	C16505	F1K1E105A029	C 1UF, 25V	1	
	C16506	F1H1C105A145	C 1 uF 16 V	1	
	C16508	F1K1E105A029	C 1UF, 25V	1	
	C16531	F1K1E105A029	C 1UF, 25V	1	
	C16534	F1H1C105A145	C 1 uF 16 V	1	
	C16551	F1K1E105A029	C 1UF, 25V	1	
	C16561	F1J1A106A087	C 10UF, 10V	1	
	C16562	F1H1C105A145	C 1 uF 16 V	1	
	C16563	F1H1C105A145	C 1 uF 16 V	1	
	C16565	ECJ1VB1H103K	C 0.01UF, 50V	1	
	C16566	ECJ1VB1H103K	C 0.01UF, 50V	1	
	C16584	ECJ1VB1H392K	C 3900UF, 50V	1	
	C16593	F1H1H102A831	C 1000PF, 50V	1	PAVCTH
	C16602	F1H1H2200008	C 22PF, 50V	1	
	C16603	F1K2J471A042	C 470PF, 630V	1	PAVCTH
	C16631	F0C2E225A286	C 2.2UF, 250V	1	PAVCTH
	C16632	F0C2E225A286	C 2.2UF, 250V	1	PAVCTH
	C16641	F1L2J562A021	C 5600PF, 630V	1	PAVCTH
	C16642	F1K2J222A024	C 2200PF, 630V	1	PAVCTH
	C16643	F1L2J562A021	C 5600PF, 630V	1	PAVCTH
	C16644	F1K2J222A024	C 2200PF, 630V	1	PAVCTH
	C16645	F1K2J222A024	C 2200PF, 630V	1	PAVCTH
	C16661	F1K2J1020001	C 1000PF, 630V	1	PAVCTH
	C16662	F1K2J1020001	C 1000PF, 630V	1	PAVCTH
	C16663	F1K2J2210003	C 220PF, 630V	1	PAVCTH
	C16668	F1H1H821A831	C 820 PF, 50V	1	
	C16685	F1H1H104A913	C 0.1UF, K , 50V	1	
	C16723	F1K1E105A029	C 1UF, 25V	1	
	C16724	F1K1E475A134	C 4.7UF 25V	1	
	C16753	F1K1E105A029	C 1UF, 25V	1	
	C16770	F1H1C105A145	C 1 uF 16 V	1	
	C16791	F2A1E221B726	E 220UF, 25V	1	PAVCTH
	C16793	F2A1E221B726	E 220UF, 25V	1	PAVCTH
	C16794	F1J1A106A087	C 10UF, 10V	1	
	C16795	F2A1E221B726	E 220UF, 25V	1	PAVCTH
	C16796	F1K1E475A134	C 4.7UF 25V	1	
	C16813	F2A2T1210001	E 120UF, 220V	1	
	C16833	F1K2J1020001	C 1000PF, 630V	1	PAVCTH
	C16834	F1K2J1020001	C 1000PF, 630V	1	PAVCTH
	C16835	F2AZZ121A033	E 120UF, 80V	1	PAVCTH
	C16842	F2A2C1010028	E 100UF, 160V	1	
	C16843	ECJ1VB1A105K	C 1UF, 10V	1	
	C16844	ECJ1XB1C104K	C 0.1UF, Z, 16V	1	
	C16854	ECJ1XB1C104K	C 0.1UF, Z, 16V	1	
	C16856	ECJ1VB1A105K	C 1UF, 10V	1	
	C16858	ECJ1XB1C104K	C 0.1UF, Z, 16V	1	
	C16860	ECJ1VB1A105K	C 1UF, 10V	1	
	C16861	ECJ1XB1C104K	C 0.1UF, Z, 16V	1	
	C16862	ECJ1VB1A105K	C 1UF, 10V	1	
	C16863	ECJ1XB1C104K	C 0.1UF, Z, 16V	1	
	C16891	F1K1E105A029	C 1UF, 25V	1	
	C16903	F1K2J152A024	C 1500PF, 630V	1	PAVCTH
	C16905	F1K2J331A042	C 330PF, 630V	1	PAVCTH
	C16907	F1K2J331A042	C 330PF, 630V	1	PAVCTH
	C16908	F1L2J472A021	C 4700PF, 630V	1	PAVCTH
	C16910	F1K2J681A039	C 680PF, 630V	1	PAVCTH
	C16912	F1K2J681A039	C 680PF, 630V	1	PAVCTH
	C17101	F1H1A105A099	C 1UF, 10V	1	PAVCTH
	C17102	F1H1A105A099	C 1UF, 10V	1	PAVCTH
	C17103	F1H1A105A099	C 1UF, 10V	1	PAVCTH

Safety	Ref. No.	Part No.	Part Name & Description	Q'ty	Remarks
	C17108	F1L2E224A028	C 0.22UF, 250V	1	
	C17109	F1L2E224A028	C 0.22UF, 250V	1	
	C17111	F1L2E224A028	C 0.22UF, 250V	1	
	C17131	F1H1A105A099	C 1UF, 10V	1	PAVCTH
	C17132	F1H1A105A099	C 1UF, 10V	1	PAVCTH
	C17134	F1L2E224A028	C 0.22UF, 250V	1	
	C17136	F1L2E224A028	C 0.22UF, 250V	1	
	C17154	F1H1H102A831	C 1000PF, 50V	1	PAVCTH
	C17155	F1H1H102A831	C 1000PF, 50V	1	PAVCTH
	C17156	F1H1H102A831	C 1000PF, 50V	1	PAVCTH
	C17157	F1H1H102A831	C 1000PF, 50V	1	PAVCTH
	C17201	F1H1A105A099	C 1UF, 10V	1	PAVCTH
	C17202	F1H1A105A099	C 1UF, 10V	1	PAVCTH
	C17203	F1H1A105A099	C 1UF, 10V	1	PAVCTH
	C17204	F1H1A105A099	C 1UF, 10V	1	PAVCTH
	C17205	F1H1A105A099	C 1UF, 10V	1	PAVCTH
	C17206	F1H1A105A099	C 1UF, 10V	1	PAVCTH
	C17221	ECJ1XB1C104K	C 0.1UF, Z, 16V	1	
	C17222	ECJ1XB1C104K	C 0.1UF, Z, 16V	1	
	C17257	F1L2E224A028	C 0.22UF, 250V	1	
	C17258	F1L2E224A028	C 0.22UF, 250V	1	
	C17259	F1L2E224A028	C 0.22UF, 250V	1	
	C17260	F1L2E224A028	C 0.22UF, 250V	1	
	C17261	F1L2E224A028	C 0.22UF, 250V	1	
	C17262	F1L2E224A028	C 0.22UF, 250V	1	
	C17309	F1H1A105A099	C 1UF, 10V	1	PAVCTH
	C17310	F1H1A105A099	C 1UF, 10V	1	PAVCTH
	C17311	F1H1A105A099	C 1UF, 10V	1	PAVCTH
	C17312	F1H1A105A099	C 1UF, 10V	1	PAVCTH
	C17321	ECJ1XB1C104K	C 0.1UF, Z, 16V	1	
	C17357	F1L2E224A028	C 0.22UF, 250V	1	
	C17359	F1L2E224A028	C 0.22UF, 250V	1	
	C17361	F1L2E224A028	C 0.22UF, 250V	1	
	C17363	F1L2E224A028	C 0.22UF, 250V	1	
	CB1	K1MY55B00001	55P CONNECTOR	1	
	CB2	K1MY55B00001	55P CONNECTOR	1	
	CB3	K1MY55B00001	55P CONNECTOR	1	
	CB4	K1MY55B00001	55P CONNECTOR	1	
	CB5	K1MY55B00001	55P CONNECTOR	1	
	CB6	K1MY55B00001	55P CONNECTOR	1	
	CB7	K1MY55B00001	55P CONNECTOR	1	
	CB8	K1MY55B00001	55P CONNECTOR	1	
	CB9	K1MY55B00001	55P CONNECTOR	1	
	CB10	K1MY55B00001	55P CONNECTOR	1	
	CB11	K1MY55B00001	55P CONNECTOR	1	
	CB12	K1MY55B00001	55P CONNECTOR	1	
	CB13	K1MY55B00001	55P CONNECTOR	1	
	CB14	K1MY55B00001	55P CONNECTOR	1	
	CB15	K1MY55B00001	55P CONNECTOR	1	
	CN0100	K1KA14A00248	14P CONNECTOR	1	
	D2820	B3AGB0000065	LED	1	
	D3009	DZ2J140M0L	ZENER DIODE	1	
	D3010	DZ2J140M0L	ZENER DIODE	1	
	D3021	DZ2J140M0L	ZENER DIODE	1	
	D3022	DZ2J140M0L	ZENER DIODE	1	
	D3023	DZ2J140M0L	ZENER DIODE	1	
	D3024	DZ2J140M0L	ZENER DIODE	1	
	D3025	DZ2J140M0L	ZENER DIODE	1	
	D3026	DZ2J140M0L	ZENER DIODE	1	

Safety	Ref. No.	Part No.	Part Name & Description	Q'ty	Remarks
	D3201	K7AAAY000015	PHOTO LINK	1	PAVCTH
	D4703	DZ2J056M0L	ZENER DIODE	1	
	D4771	DZ2J056M0L	ZENER DIODE	1	
	D4773	B0JCCE000021	DIODE	1	
	D8710	DA2J10100L	DIODE	1	
	D8771	B0ADCK000001	DIODE	1	
	D8772	DZ2J068M0L	ZENER DIODE	1	
	D8773	DZ2J068M0L	ZENER DIODE	1	
	D9802	B0ADCK000001	DIODE	1	
	D16001	B0ECKP000061	DIODE	1	PAVCTH
	D16002	B0ECKP000061	DIODE	1	PAVCTH
	D16021	DA3CF30ACL	ZENER DIODE	1	
	D16022	DA3CF30ACL	ZENER DIODE	1	
	D16041	B0FBCN000005	DIODE	1	
	D16051	B0FBCN000005	DIODE	1	
	D16071	B0ECKP000055	DIODE	1	
	D16072	B0ECKP000055	DIODE	1	
	D16131	B0ECKP000055	DIODE	1	
	D16133	DA2J10100L	DIODE	1	
	D16134	DZ2J051M0L	ZENER DIODE	1	
	D16135	DA2J10100L	DIODE	1	
	D16191	B0ECKP000055	DIODE	1	
	D16192	DA2J10100L	DIODE	1	
	D16196	DZ2J200M0L	ZENER DIODE	1	
	D16243	DA3X103E0L	DIODE	1	PAVCTH
	D16251	DZ2J330M0L	ZENER DIODE	1	
	D16252	DZ2J330M0L	ZENER DIODE	1	
	D16254A	B3ABB0000381	LED	1	PAVCTH
	D16255	DA2J10100L	DIODE	1	
	D16285	DA3X102D0L	DIODE	1	PAVCTH
	D16286	DA3X102D0L	DIODE	1	PAVCTH
	D16315	DZ2J150M0L	ZENER DIODE	1	
	D16316	B0ECKP000055	DIODE	1	
	D16317	B0ECHS000002	DIODE	1	
	D16402	B0ECKP000061	DIODE	1	PAVCTH
	D16403	B0ECKP000061	DIODE	1	PAVCTH
	D16407	B0JCDE000006	DIODE	1	
	D16411	DA2J10100L	DIODE	1	
	D16413	DA2J10100L	DIODE	1	
	D16421	DA3CF30ACL	ZENER DIODE	1	
	D16430	B0ECKP000061	DIODE	1	PAVCTH
	D16432	B0ECKP000055	DIODE	1	
	D16461	B0FBCN000005	DIODE	1	
	D16473	DA2J10100L	DIODE	1	
	D16477	DA2J10100L	DIODE	1	
	D16481	B0FBCN000005	DIODE	1	
	D16506	DZ2J051M0L	ZENER DIODE	1	
	D16534	DZ2J051M0L	ZENER DIODE	1	
	D16536	B0ECKP000055	DIODE	1	
	D16581	DZ2J330M0L	ZENER DIODE	1	
	D16582	DZ2J330M0L	ZENER DIODE	1	
	D16583	B3ABB0000381	LED	1	PAVCTH
	D16601	DZ2J051M0L	ZENER DIODE	1	
	D16618	B0ECKP000055	DIODE	1	
	D16641	DA3CF32ACL	ZENER DIODE	1	PAVCTH
	D16643	DA3CF32ACL	ZENER DIODE	1	PAVCTH
	D16648	DA2J10100L	DIODE	1	
	D16652	B0ECKP000055	DIODE	1	
	D16662	DZ2J220M0L	TRANSISTOR	1	
	D16663	DZ2J220M0L	TRANSISTOR	1	
	D16669	DA2J10100L	DIODE	1	
	D16673	B0ECHR000004	DIODE	1	

Safety	Ref. No.	Part No.	Part Name & Description	Q'ty	Remarks
	D16674	B0ECHR000004	DIODE	1	
	D16676	DA2J10100L	DIODE	1	
	D16685	DA2J10100L	DIODE	1	
	D16686	DA2J10100L	DIODE	1	
	D16711	B0ECHR000004	DIODE	1	
	D16712	B0ECKP000055	DIODE	1	
	D16713	B0ECHS000002	DIODE	1	
	D16714	B0ECHS000002	DIODE	1	
	D16720	B0ECHR000004	DIODE	1	
	D16728	B0ECKP000055	DIODE	1	
	D16823	DA3X103E0L	DIODE	1	PAVCTH
	D16824	DA2J10100L	DIODE	1	
	D16825	DZ2J330M0L	ZENER DIODE	1	
	D16826	DZ2J330M0L	ZENER DIODE	1	
	D16828	DA2J10100L	DIODE	1	
	D16833	B0ECHR000004	DIODE	1	
	D17103	B0JCCD000020	DIODE	1	
	D17303	B0JCCD000020	DIODE	1	
	HS16621	K4AZ02D00004	TERMINAL	1	PAVCTH
	HS16622	K4AZ02D00004	TERMINAL	1	PAVCTH
	HS16623	K4AZ02D00004	TERMINAL	1	PAVCTH
	IC2001	C1ZBZ0004368	IC	1	
	IC2002	C1ZBZ0004683	IC	1	PAVCTH
	IC3051	C0ABBB000179	IC	1	PAVCTH
	IC4900	C1AB00003871	IC	1	PAVCTH
	IC5000	AN34044AAVF	IC	1	
	IC5701	C0DBEYY00175	IC	1	
	IC8000	MN2WS0250E	IC	1	PAVCTH
	IC8100	C0DBAYY01283	IC	1	PAVCTH
	IC8101	C0DBAYY01285	IC	1	PAVCTH
	IC8200	C3ABUY000020	IC	1	PAVCTH
	IC8201	C3ABUY000020	IC	1	PAVCTH
	IC8602	C0DBZYY00541	IC	1	PAVCTH
	IC8606	C0DBZYY00541	IC	1	PAVCTH
	IC8650	C1CB00003736	IC	1	PAVCTH
	IC8704	C0DBAYY01283	IC	1	PAVCTH
	IC8705	C0DBAYY01299	IC	1	PAVCTH
	IC8709	C0DBGYY01682	IC	1	
	IC8714	C0DBEYY00102	IC	1	PAVCTH
	IC8715	C0DBGYY00887	IC	1	
	IC8900	TVRS623AF	IC	1	PAVCTH
	IC8902	TVR***A	IC	1	(A) PAVCTH
	IC8902	TVR***Z	IC	1	(Z) PAVCTH
	IC8902	TVR***D	IC	1	(D) PAVCTH
	IC8902	TVR***G	IC	1	(G) PAVCTH
	IC8902	TVR***K	IC	1	(K) PAVCTH
	IC8902	TVR***M	IC	1	(M) PAVCTH
	IC8902	TVR***P	IC	1	(P) PAVCTH
	IC8902	TVR***S	IC	1	(S) PAVCTH
	IC8902	TVR***V	IC	1	(V) PAVCTH
	IC9005	C0CBCAG00046	IC	1	
	IC9300	C1AB00003813	IC	1	PAVCTH
	IC9304	TVRS877AB	IC	1	PAVCTH
	IC9400	C0JBAZ001120	IC	1	
	IC9401	C0JBAZ001120	IC	1	
	IC9402	C0JBAZ001120	IC	1	
	IC9803	C0DBAYY01283	IC	1	PAVCTH
	IC9804	C0DBZYY00541	IC	1	PAVCTH
	IC16131	C0ZBZ0001920	IC	1	PAVCTH
	IC16132	C0ZBZ0001920	IC	1	PAVCTH

Safety	Ref. No.	Part No.	Part Name & Description	Q'ty	Remarks
	IC16151	C0ZBZ0001920	IC	1	PAVCTH
	IC16152	C0ZBZ0001920	IC	1	PAVCTH
	IC16241	C0JBAU000088	IC	1	
	IC16304	MIP3910MSSCF	IC	1	
	IC16312	C0DBZYY00531	IC	1	PAVCTH
	IC16501	C0ZBZ0001920	IC	1	PAVCTH
	IC16502	C0ZBZ0001920	IC	1	PAVCTH
	IC16521	C0ZBZ0001920	IC	1	PAVCTH
	IC16522	C0ZBZ0001920	IC	1	PAVCTH
	IC16561	AN49272A-VF	IC	1	PAVCTH
	IC16563	C0JBAB000996	IC	1	
	IC16600	C1ZBZ0004559	IC	1	PAVCTH
	IC16603	C0JBAA000344	IC	1	
	IC16725	C1ZBZ0004715	IC	1	PAVCTH
	IC16784	MIP3910MSSCF	IC	1	
	IC16785	C0DBZYY00532	IC	1	PAVCTH
	IC16786	MIP3910MSSCF	IC	1	
	IC16787	C0DBZYY00532	IC	1	PAVCTH
	IC16795	C0CBALC00012	IC	1	
	IC16921	C1ZBZ0004557	IC	1	PAVCTH
	IC17201	C0JBAU000088	IC	1	
	IC17202	C0JBAU000088	IC	1	
	IC17301	C0JBAU000088	IC	1	
	JK3001	K1FY315A0014	CONNECTOR	1	PAVCTH
	JK3100B	K1U920A00004	CONNECTOR UNIT	1	PAVCTH
	JK3202	K2HC1YYB0079	JACK	1	PAVCTH
	JK4700	K1FY119D0025	CONNECTOR	1	PAVCTH
	JK4701	K1FY119D0025	CONNECTOR	1	PAVCTH
	JK8600	K1NA12E00016	12P CONNECTOR	1	
	JK8601	K1FY208B0013	CONNECTOR	1	PAVCTH
	JK8602	K2LC1YYA0018	JACK	1	PAVCTH
	JS1050	D0GA360JA023	M 36 OHM, J,1/16W	1	
	JS1051	D0GA360JA023	M 36 OHM, J,1/16W	1	
	JS1052	D0GA360JA023	M 36 OHM, J,1/16W	1	
	K1	K1KY07AA0719	7P CONNECTOR	1	
	L4901	G1C150MA0533	INDUCTION COIL	1	PAVCTH
	L4902	G1C150MA0533	INDUCTION COIL	1	PAVCTH
	L4903	G1C150MA0533	INDUCTION COIL	1	PAVCTH
	L4904	G1C150MA0533	INDUCTION COIL	1	PAVCTH
	L6703	D0GAR00J0005	M 0 OHM, 1/16W	1	
	L6707	J0JYC0000464	FILTER	1	PAVCTH
	L8001	J0JCC0000287	CHIP INDUCTOR	1	
	L8002	J0JYC0000464	FILTER	1	PAVCTH
	L8003	J0JKC0000021	CHIP INDUCTOR	1	
	L8004	J0JCC0000287	CHIP INDUCTOR	1	
	L8005	J0JYC0000464	FILTER	1	PAVCTH
	L8100	G1C1R5ZA0311	INDUCTION COIL	1	PAVCTH
	L8101	G1C4R7ZA0311	INDUCTION COIL	1	PAVCTH
	L8600	J0ZZB0000142	FILTER	1	(A) (Z)
	L8601	J0ZZB0000142	FILTER	1	(A) (Z)
	L8603	J0ZZB0000142	FILTER	1	(A) (Z)
	L8604	J0JYC0000464	FILTER	1	PAVCTH
	L8606	J0JYC0000464	FILTER	1	PAVCTH
	L8607	J0JYC0000464	FILTER	1	PAVCTH
	L8704	G1C1R5ZA0311	INDUCTION COIL	1	PAVCTH
	L8705	G1C4R7ZA0311	INDUCTION COIL	1	PAVCTH
	L9006	G1C1R5ZA0311	INDUCTION COIL	1	PAVCTH
	L9008	J0JYC0000464	FILTER	1	PAVCTH

Safety	Ref. No.	Part No.	Part Name & Description	Q'ty	Remarks
	L9300	J0JYC0000464	FILTER	1	PAVCTH
	L9303	J0JYC0000464	FILTER	1	PAVCTH
	L9305	J0JYC0000464	FILTER	1	PAVCTH
	L9306	J0JYC0000464	FILTER	1	PAVCTH
	L9307	J0JYC0000464	FILTER	1	PAVCTH
	L9308	J0JYC0000464	FILTER	1	PAVCTH
	L16001	G0CR22KA0216	PEAKING COIL	1	PAVCTH
	L16071	G0ZZ00002183	PEAKING COIL	1	
	L16072	G0ZZ00002183	PEAKING COIL	1	
	L16080	G0ZZ00002183	PEAKING COIL	1	
	L16081	G0ZZ00002183	PEAKING COIL	1	
	L16082	G0ZZ00002183	PEAKING COIL	1	
	L16083	G0ZZ00002183	PEAKING COIL	1	
	L16303	G0C471MA0049	PEAKING COIL	1	
	L16411	G0CR22KA0235	PEAKING COIL	1	PAVCTH
	L16430	G0ZZ00002183	PEAKING COIL	1	
	L16432	G0ZZ00002183	PEAKING COIL	1	
	L16434	G0ZZ00002183	PEAKING COIL	1	
	L16435	G0ZZ00002183	PEAKING COIL	1	
	L16436	G0ZZ00002183	PEAKING COIL	1	
	L16437	G0ZZ00002183	PEAKING COIL	1	
	L16660	G0C640Z00001	PEAKING COIL	1	PAVCTH
	PA2000	K5H4022A0031	FUSE	1	
	PA8704	K5H5022A0031	FUSE	1	
	PC16131	B3PBE0000065	IC	1	PAVCTH
	PC16191	B3PBA0000625	IC	1	PAVCTH
	PC16251	B3PBA0000580	IC	1	
	PC16301	B3PBA0000580	IC	1	
	PC16461	B3PBE0000065	IC	1	PAVCTH
	PC16462	B3PBE0000060	IC	1	
	PC16480	B3PBA0000580	IC	1	
	PC16581	B3PBA0000580	IC	1	
	PC16603	B3PBA0000580	IC	1	
	PC16685	B3PBA0000625	IC	1	PAVCTH
	PC16723	B3PBA0000580	IC	1	
	PC16896	B3PBA0000580	IC	1	
	PC16897	B3PBA0000580	IC	1	
	Q2001	B1CHPC000005	FET	1	PAVCTH
	Q2002	B1ABCE000015	TRANSISTOR	1	
	Q2003	B1CBGD000001	FET	1	
	Q2004	B1ABCE000015	TRANSISTOR	1	
	Q2007	B1ABCE000015	TRANSISTOR	1	
	Q2810	B1ABCE000015	TRANSISTOR	1	
	Q2811	B1ABCE000015	TRANSISTOR	1	
	Q2812	B1ABCE000015	TRANSISTOR	1	
	Q3008	B1ADCF000194	TRANSISTOR	1	
	Q3102	B1ABKE000001	TRANSISTOR	1	PAVCTH
	Q3103	B1ABKE000001	TRANSISTOR	1	PAVCTH
	Q3304	B1ADCF000194	TRANSISTOR	1	
	Q3305	B1ABKE000001	TRANSISTOR	1	PAVCTH
	Q3306	B1ABKE000001	TRANSISTOR	1	PAVCTH
	Q3307	B1ABBE000003	TRANSISTOR	1	
	Q4700	B1ABCF000231	TRANSISTOR	1	
	Q4709	B1ABCF000231	TRANSISTOR	1	
	Q8771	B1HFCEA00001	TRANSISTOR	1	
	Q9201	B1HFCEA00001	TRANSISTOR	1	
	Q9202	B1ABCE000015	TRANSISTOR	1	
	Q16001	B1JADN000013	TRANSISTOR	1	PAVCTH
	Q16002	B1JADN000013	TRANSISTOR	1	PAVCTH

Safety	Ref. No.	Part No.	Part Name & Description	Q'ty	Remarks
	Q16021	DG3C3010CL	TRANSISTOR	1	
	Q16022	DG3C3010CL	TRANSISTOR	1	
	Q16041	DG3D3020CVLW	TRANSISTOR	1	PAVCTH
	Q16051	DG3D3020CVLW	TRANSISTOR	1	PAVCTH
	Q16101	B1CFRM000031	FET	1	PAVCTH
	Q16102	B1CFRM000032	FET	1	PAVCTH
	Q16191	B1HFPFA00001	TRANSISTOR	1	
	Q16251	B1ABCF000231	TRANSISTOR	1	
	Q16280	B1ADCE000027	TRANSISTOR	1	
	Q16401	B1JADN000013	TRANSISTOR	1	PAVCTH
	Q16402	B1JADN000013	TRANSISTOR	1	PAVCTH
	Q16421	DG3D3010CVLW	TRANSISTOR	1	PAVCTH
	Q16422	DG3D3010CVLW	TRANSISTOR	1	PAVCTH
	Q16441	B1JAEN000015	TRANSISTOR	1	
	Q16451	DG3D3020CVLW	TRANSISTOR	1	PAVCTH
	Q16581	B1ABCF000231	TRANSISTOR	1	
	Q16601	B1CERQ000061	FET	1	
	Q16602	B1CFGF000019	FET	1	PAVCTH
	Q16622	DG3C3020CL	TRANSISTOR	1	
	Q16623	DG3C3020CL	TRANSISTOR	1	
	Q16646	B1CFGF000019	FET	1	PAVCTH
	Q16647	B1CBGD000001	FET	1	
	Q16648	DSC2001Q0L	TRANSISTOR	1	
	Q16652	B1ADCE000027	TRANSISTOR	1	
	Q16660	B1CFNQ000003	FET	1	PAVCTH
	Q16661	DG3C6010CL	TRANSISTOR	1	PAVCTH
	Q16762	B1HFPFA00001	TRANSISTOR	1	
	Q16815	B1ABCE000015	TRANSISTOR	1	
	Q16817	DSC2001Q0L	TRANSISTOR	1	
	Q16820	B1CFGF000019	FET	1	PAVCTH
	Q16891	B1ADCE000027	TRANSISTOR	1	
	Q16921	B1CFGF000019	FET	1	PAVCTH
	Q16931	B1ABCE000015	TRANSISTOR	1	
	R050	D0GAR00J0005	M 0 OHM, 1/16W	1	(A) (Z)
	R061	D0GAR00J0005	M 0 OHM, 1/16W	1	(D) (G) (K) (M) (P) (S) (V)
	R074	D0GAR00J0005	M 0 OHM, 1/16W	1	
	R0902	D0GA473JA023	M 47KOHM, J,1/16W	1	
	R0903	D0GA272JA023	M 2.7KOHM, J.1/16W	1	
	R0904	D0GA272JA023	M 2.7KOHM, J.1/16W	1	
	R0905	D0GA272JA023	M 2.7KOHM, J.1/16W	1	
	R0906	D0GA272JA023	M 2.7KOHM, J.1/16W	1	
	R0909	D0GA272JA023	M 2.7KOHM, J.1/16W	1	
	R0910	D0GA272JA023	M 2.7KOHM, J.1/16W	1	
	R0911	D1HY3324A012	NETWORK RESISTER	1	PAVCTH
	R0912	D0GA101JA023	M 100 OHM, J,1/16W	1	
	R0913	D0GA101JA023	M 100 OHM, J,1/16W	1	
	R0936	D0GA360JA023	M 36 OHM, J,1/16W	1	
	R0937	D0GA360JA023	M 36 OHM, J,1/16W	1	
	R0941	D0GA360JA023	M 36 OHM, J,1/16W	1	
	R0942	D0GA360JA023	M 36 OHM, J,1/16W	1	
	R0943	D0GA360JA023	M 36 OHM, J,1/16W	1	
	R0944	D0GA360JA023	M 36 OHM, J,1/16W	1	
	R0945	D0GA360JA023	M 36 OHM, J,1/16W	1	
	R0946	D0GA360JA023	M 36 OHM, J,1/16W	1	
	R0949	D0GA360JA023	M 36 OHM, J,1/16W	1	
	R0950	D0GA360JA023	M 36 OHM, J,1/16W	1	
	R0952	D0GA102JA023	M1KOHM, J.1/16 W	1	
	R0953	D0GA101JA023	M 100 OHM, J,1/16W	1	
	R0954	D0GA101JA023	M 100 OHM, J,1/16W	1	
	R2001	D0GA103JA023	M10KOHM, J.1/16 W	1	
	R2004	D0GA103JA023	M10KOHM, J.1/16 W	1	

Safety	Ref. No.	Part No.	Part Name & Description	Q'ty	Remarks
	R2008	D0GA472JA023	M 4.7KOHM, J,1/16W	1	
	R2012	D0GA103JA023	M10KOHM, J.1/16 W	1	
	R2015	D0GA473JA023	M 47KOHM, J,1/16W	1	
	R2016	D0GA104JA023	M100KOHM, J.1/16 W	1	
	R2017	D0GA102JA023	M1KOHM, J.1/16 W	1	
	R2018	D0GA102JA023	M1KOHM, J.1/16 W	1	
	R2023	D0GA472JA023	M 4.7KOHM, J,1/16W	1	
	R2024	D0GA223JA023	M 22K OHM J 1/16W	1	
	R2025	D0GA103JA023	M10KOHM, J.1/16 W	1	
	R2033	D0GA103JA023	M10KOHM, J.1/16 W	1	
	R2035	D0GA223JA023	M 22K OHM J 1/16W	1	
	R2036	D0GA223JA023	M 22K OHM J 1/16W	1	
	R2038	D0GA162JA023	M 1.6KOHM, J,1/16W	1	PAVCTH
	R2039	D0GA103JA023	M10KOHM, J.1/16 W	1	
	R2041	D0GA433JA023	M 43KOHM,J,1/16W	1	PAVCTH
	R2042	D0GA102JA023	M1KOHM, J.1/16 W	1	
	R2045	D1BA7151A023	M 7.15KOHM, F 1/16 W	1	PAVCTH
	R2046	D0GA102JA023	M1KOHM, J.1/16 W	1	
	R2047	D0GAR00J0005	M 0 OHM, 1/16W	1	
	R2050	ERJ2RKF1911X	M 1.91KOHM, J. 1/16W	1	PAVCTH
	R2051	ERJ2RKF3091X	M 3.09KOHM, J. 1/16W	1	PAVCTH
	R2052	D1BA6041A023	M 6.04KOHM,F.1/16 W	1	PAVCTH
	R2053	D1BA1692A023	M 16.9KOHM,F.1/16 W	1	PAVCTH
	R2054	D0GA223JA023	M 22K OHM J 1/16W	1	
	R2055	D0GA223JA023	M 22K OHM J 1/16W	1	
	R2057	D0GA103JA023	M10KOHM, J.1/16 W	1	
	R2058	D0GA360JA023	M 36 OHM, J,1/16W	1	
	R2059	D0GA102JA023	M1KOHM, J.1/16 W	1	
	R2060	D0GA102JA023	M1KOHM, J.1/16 W	1	
	R2810	D0GA470JA023	M 47 OHM, J,1/16W	1	
	R2811	D0GA104JA023	M100KOHM, J.1/16 W	1	
	R2812	D0GA224JA023	M 220KOHM J 1/16W	1	
	R2813	D0GA223JA023	M 22K OHM J 1/16W	1	
	R2814	D0GA103JA023	M10KOHM, J.1/16 W	1	
	R2815	D0GA473JA023	M 47KOHM, J,1/16W	1	
	R2816	D0GA471JA023	M 470OHM, J,1/16W	1	
	R2817	D0GA223JA023	M 22K OHM J 1/16W	1	
	R2818	D0GA473JA023	M 47KOHM, J,1/16W	1	
	R2819	D0GA102JA023	M1KOHM, J.1/16 W	1	
	R2834	D0GA122JA023	M 1.2KOHM, J,1/16W	1	
	R3001	D0GA103JA023	M10KOHM, J.1/16 W	1	
	R3002	D0GA103JA023	M10KOHM, J.1/16 W	1	
	R3003	D0GA103JA023	M10KOHM, J.1/16 W	1	
	R3004	D0GA103JA023	M10KOHM, J.1/16 W	1	
	R3008	D1BA1003A023	M 100KOHM,F,1/16W	1	PAVCTH
	R3009	D1BA1003A023	M 100KOHM,F,1/16W	1	PAVCTH
	R3010	D0GA203JA023	M 20K OHM J.1/16W	1	
	R3011	D0GA203JA023	M 20K OHM J.1/16W	1	
	R3106	D0GA333JA023	M 33KOHM,J,1/16W	1	
	R3107	D0GA333JA023	M 33KOHM,J,1/16W	1	
	R3142	D1BF75R0A073	M 75.0 OHM,F.1/4 W	1	PAVCTH
	R3167	D0GA333JA023	M 33KOHM,J,1/16W	1	
	R3168	D0GA333JA023	M 33KOHM,J,1/16W	1	
	R3171	D0GA272JA023	M 2.7KOHM, J.1/16W	1	
	R3172	D0GA272JA023	M 2.7KOHM, J.1/16W	1	
	R3173	D1BA1003A023	M 100KOHM,F,1/16W	1	PAVCTH
	R3181	D1BD75R0A066	M 75.0 OHM,F.1/8 W	1	
	R3182	D1BD75R0A066	M 75.0 OHM,F.1/8 W	1	
	R3183	D1BD75R0A066	M 75.0 OHM,F.1/8 W	1	
	R3188	D1BA1003A023	M 100KOHM,F,1/16W	1	PAVCTH
	R3192	D1HY2204A012	NETWORK RESISTER	1	PAVCTH
	R3199	D0GA104JA023	M100KOHM, J.1/16 W	1	

Safety	Ref. No.	Part No.	Part Name & Description	Q'ty	Remarks
	R3200	D0GA104JA023	M100KOHM, J.1/16 W	1	
	R3201	D1BD75R0A066	M 75.0 OHM,F.1/8 W	1	
	R3203	D1BD75R0A066	M 75.0 OHM,F.1/8 W	1	
	R3207	D0GA472JA023	M 4.7KOHM, J,1/16W	1	
	R3209	D0GA472JA023	M 4.7KOHM, J,1/16W	1	
	R3210	D1HY2204A012	NETWORK RESISTER	1	PAVCTH
	R3213	D0GA220JA023	M22 OHM, J.1/16 W	1	
	R3214	D0GA473JA023	M 47KOHM, J,1/16W	1	
	R3216	D1BD75R0A066	M 75.0 OHM,F.1/8 W	1	
	R3220	D0GA101JA023	M 100 OHM, J,1/16W	1	
	R3221	D1HY2204A012	NETWORK RESISTER	1	PAVCTH
	R3290	D0GA473JA023	M 47KOHM, J,1/16W	1	
	R3291	D0GA473JA023	M 47KOHM, J,1/16W	1	
	R3312	D0GA103JA023	M10KOHM, J.1/16 W	1	
	R3314	D0GA103JA023	M10KOHM, J.1/16 W	1	
	R3315	D0GA101JA023	M 100 OHM, J,1/16W	1	
	R3316	D0GA473JA023	M 47KOHM, J,1/16W	1	
	R3317	D0GA103JA023	M10KOHM, J.1/16 W	1	
	R3319	D0GA101JA023	M 100 OHM, J,1/16W	1	
	R3320	D0GA101JA023	M 100 OHM, J,1/16W	1	
	R3322	D0GA473JA023	M 47KOHM, J,1/16W	1	
	R3323	D0GA103JA023	M10KOHM, J.1/16 W	1	
	R3324	D0GA102JA023	M1KOHM, J.1/16 W	1	
	R3342	D0GA331JA023	M 330 OHM, J,1/16W	1	
	R3343	D0GA331JA023	M 330 OHM, J,1/16W	1	
	R4513	D1BA1600A023	M 160 OHM,F.1/16 W	1	PAVCTH
	R4514	D1BA82R0A014	M 82 OHM,F.1/16 W	1	PAVCTH
	R4702	D0GA103JA023	M10KOHM, J.1/16 W	1	
	R4708	D0GA103JA023	M10KOHM, J.1/16 W	1	
	R4709	D0GA103JA023	M10KOHM, J.1/16 W	1	
	R4710	D1HY4734A012	NETWORK RESISTER	1	PAVCTH
	R4711	D0GA102JA023	M1KOHM, J.1/16 W	1	
	R4728	D0GA103JA023	M10KOHM, J.1/16 W	1	
	R4748	D0GA680JA023	M 68 OHM, J,1/16W	1	
	R4749	D0GA680JA023	M 68 OHM, J,1/16W	1	
	R4750	D0GA680JA023	M 68 OHM, J,1/16W	1	
	R4751	D0GA680JA023	M 68 OHM, J,1/16W	1	
	R4779	D0GA360JA023	M 36 OHM, J,1/16W	1	
	R4788	D0GA103JA023	M10KOHM, J.1/16 W	1	
	R4794	D0GA103JA023	M10KOHM, J.1/16 W	1	
	R4795	D0GA103JA023	M10KOHM, J.1/16 W	1	
	R4796	D1HY4734A012	NETWORK RESISTER	1	PAVCTH
	R4797	D0GA102JA023	M1KOHM, J.1/16 W	1	
	R4798	D0GA273JA023	M 27K OHM J ,1/16W	1	
	R4900	D0GFR00J0005	M 0 OHM,J,1/3W	1	
	R4901	D1HY6804A012	NETWORK RESISTER	1	PAVCTH
	R4906	D0GA472JA023	M 4.7KOHM, J,1/16W	1	
	R4907	D0GA102JA023	M1KOHM, J.1/16 W	1	
	R4908	D0GA102JA023	M1KOHM, J.1/16 W	1	
	R4958	D0GA103JA023	M10KOHM, J.1/16 W	1	
	R5000	D0GA102JA023	M1KOHM, J.1/16 W	1	
	R5001	D0GA473JA023	M 47KOHM, J,1/16W	1	
	R5008	D0GA473JA023	M 47KOHM, J,1/16W	1	
	R5009	D0GA103JA023	M10KOHM, J.1/16 W	1	
	R5010	D0GA272JA023	M 2.7KOHM, J.1/16W	1	
	R5011	D0GA104JA023	M100KOHM, J.1/16 W	1	
	R5012	D0GA223JA023	M 22K OHM J 1/16W	1	
	R5013	D0GA103JA023	M10KOHM, J.1/16 W	1	
	R5014	D0GA103JA023	M10KOHM, J.1/16 W	1	
	R5714	D0GBR00J0004	M 0 OHM J 1/10W	1	
	R5734	D0GBR00J0004	M 0 OHM J 1/10W	1	
	R5735	D1BA1302A023	M13KOHM, F.1/16 W	1	PAVCTH

Safety	Ref. No.	Part No.	Part Name & Description	Q'ty	Remarks
	R5736	D1BA1002A023	M10KOHM, F.1/16 W	1	PAVCTH
	R5747	D0GBR00J0004	M 0 OHM J 1/10W	1	
	R5932	D0GA103JA023	M10KOHM, J.1/16 W	1	
	R6703	D0GBR00J0004	M 0 OHM J 1/10W	1	
	R6726	D0GA681JA023	M680 OHM, J,1/16W	1	
	R6727	D0GA681JA023	M680 OHM, J,1/16W	1	
	R6731	D0GA103JA023	M10KOHM, J.1/16 W	1	
	R6732	D0GA103JA023	M10KOHM, J.1/16 W	1	
	R8008	D0GA331JA023	M 330 OHM, J,1/16W	1	
	R8009	D0GA1R1JA023	M 1.1OHM, J,1/16W	1	PAVCTH
	R8100	D1BB2001A197	M 2 KOHM,F.1/10 W	1	PAVCTH
	R8101	D1BB1051A087	M 1.05 KOHM,F.1/10 W	1	PAVCTH
	R8111	D1BB2001A197	M 2 KOHM,F.1/10 W	1	PAVCTH
	R8112	D1BB1961A087	M 1.96 KOHM,F.1/10 W	1	PAVCTH
	R8200	D1BA2400A023	M 240 OHM,F.1/16 W	1	PAVCTH
	R8203	D1BA2700A023	M 270 OHM,F.1/16 W	1	PAVCTH
	R8204	D1BA2700A023	M 270 OHM,F.1/16 W	1	PAVCTH
	R8205	D1BA2700A023	M 270 OHM,F.1/16 W	1	PAVCTH
	R8206	D1BA2700A023	M 270 OHM,F.1/16 W	1	PAVCTH
	R8207	D1BA2700A023	M 270 OHM,F.1/16 W	1	PAVCTH
	R8208	D1BA2700A023	M 270 OHM,F.1/16 W	1	PAVCTH
	R8217	D0GA221JA023	M220 OHM, J.1/16 W	1	
	R8218	D0GA221JA023	M220 OHM, J.1/16 W	1	
	R8219	D1BA2400A023	M 240 OHM,F.1/16 W	1	PAVCTH
	R8220	D1BA2400A023	M 240 OHM,F.1/16 W	1	PAVCTH
	R8221	D0GA103JA023	M10KOHM, J.1/16 W	1	
	R8230	D1BA2700A023	M 270 OHM,F.1/16 W	1	PAVCTH
	R8231	D1BA2700A023	M 270 OHM,F.1/16 W	1	PAVCTH
	R8232	D1BA2700A023	M 270 OHM,F.1/16 W	1	PAVCTH
	R8233	D1BA2700A023	M 270 OHM,F.1/16 W	1	PAVCTH
	R8234	D0GA220JA023	M22 OHM, J.1/16 W	1	
	R8235	D0GA220JA023	M22 OHM, J.1/16 W	1	
	R8236	D0GA220JA023	M22 OHM, J.1/16 W	1	
	R8237	D0GA220JA023	M22 OHM, J.1/16 W	1	
	R8238	D0GA220JA023	M22 OHM, J.1/16 W	1	
	R8240	D1HY2208A012	NETWORK RESISTER	1	PAVCTH
	R8241	D1HY2204A012	NETWORK RESISTER	1	PAVCTH
	R8242	D1HY2204A012	NETWORK RESISTER	1	PAVCTH
	R8243	D1HY2204A012	NETWORK RESISTER	1	PAVCTH
	R8300	D0GA471JA023	M 470OHM, J,1/16W	1	
	R8301	D1BA6201A023	M 6.2 KOHM,F.1/16 W	1	PAVCTH
	R8302	D0GA360JA023	M 36 OHM, J,1/16W	1	
	R8303	D0GA360JA023	M 36 OHM, J,1/16W	1	
	R8304	D0GA360JA023	M 36 OHM, J,1/16W	1	
	R8305	D0GA360JA023	M 36 OHM, J,1/16W	1	
	R8418	D0GA103JA023	M10KOHM, J.1/16 W	1	
	R8441	D0GA103JA023	M10KOHM, J.1/16 W	1	
	R8444	D0GA103JA023	M10KOHM, J.1/16 W	1	
	R8502	D0GA103JA023	M10KOHM, J.1/16 W	1	
	R8506	D0GA680JA023	M 68 OHM, J,1/16W	1	
	R8515	D0GA680JA023	M 68 OHM, J,1/16W	1	
	R8600	D0GA680JA023	M 68 OHM, J,1/16W	1	
	R8607	D0GA103JA023	M10KOHM, J.1/16 W	1	
	R8608	D0GA103JA023	M10KOHM, J.1/16 W	1	
	R8617	D0GA103JA023	M10KOHM, J.1/16 W	1	
	R8618	D0GA103JA023	M10KOHM, J.1/16 W	1	
	R8620	D0GA103JA023	M10KOHM, J.1/16 W	1	
	R8621	D0GA103JA023	M10KOHM, J.1/16 W	1	
	R8624	D0GA680JA023	M 68 OHM, J,1/16W	1	
	R8625	D0GA680JA023	M 68 OHM, J,1/16W	1	
	R8626	D0GA680JA023	M 68 OHM, J,1/16W	1	
	R8627	D0GA680JA023	M 68 OHM, J,1/16W	1	

Safety	Ref. No.	Part No.	Part Name & Description	Q'ty	Remarks
	R8628	D0GA680JA023	M 68 OHM, J,1/16W	1	
	R8629	D0GA680JA023	M 68 OHM, J,1/16W	1	
	R8630	EXB2HV103JV	M 10 kOHM 1/16 W	1	
	R8632	D1HY6804A012	NETWORK RESISTER	1	PAVCTH
	R8634	D1HY6804A012	NETWORK RESISTER	1	PAVCTH
	R8636	D0GA360JA023	M 36 OHM, J,1/16W	1	
	R8637	D0GA272JA023	M 2.7KOHM, J.1/16W	1	
	R8638	D0GA272JA023	M 2.7KOHM, J.1/16W	1	
	R8639	D0GA103JA023	M10KOHM, J.1/16 W	1	
	R8640	D0GA103JA023	M10KOHM, J.1/16 W	1	
	R8641	D1HYR004A024	NETWORK RESISTER	1	(D) (G) (K) (M) (P) (S) (V) PAVCTH
	R8642	D1HYR004A024	NETWORK RESISTER	1	(D) (G) (K) (M) (P) (S) (V) PAVCTH
	R8648	D1HYR004A024	NETWORK RESISTER	1	(D) (G) (K) (M) (P) (S) (V) PAVCTH
	R8650	D0GA472JA023	M 4.7KOHM, J,1/16W	1	
	R8651	D0GA152JA023	M 1.5KOHM, J,0.063W	1	
	R8653	D0GAR00J0005	M 0 OHM, 1/16W	1	
	R8654	D0GA680JA023	M 68 OHM, J,1/16W	1	
	R8655	D0GA680JA023	M 68 OHM, J,1/16W	1	
	R8656	D0GA680JA023	M 68 OHM, J,1/16W	1	
	R8657	D0GA680JA023	M 68 OHM, J,1/16W	1	
	R8658	D0GA680JA023	M 68 OHM, J,1/16W	1	
	R8659	D0GA680JA023	M 68 OHM, J,1/16W	1	
	R8660	D0GA680JA023	M 68 OHM, J,1/16W	1	
	R8661	D0GA680JA023	M 68 OHM, J,1/16W	1	
	R8662	D0GA680JA023	M 68 OHM, J,1/16W	1	
	R8663	D0GA680JA023	M 68 OHM, J,1/16W	1	
	R8664	D0GA680JA023	M 68 OHM, J,1/16W	1	
	R8665	D0GA680JA023	M 68 OHM, J,1/16W	1	
	R8666	D0GA472JA023	M 4.7KOHM, J,1/16W	1	
	R8668	D0GA472JA023	M 4.7KOHM, J,1/16W	1	
	R8670	D1BA2491A023	M 2.49KOHM,F,1/16W	1	PAVCTH
	R8681	D0GA472JA023	M 4.7KOHM, J,1/16W	1	
	R8683	D0GA472JA023	M 4.7KOHM, J,1/16W	1	
	R8691	D0GAR00J0005	M 0 OHM, 1/16W	1	
	R8694	D1BA1822A023	M 18.2KOHM,F.1/16 W	1	PAVCTH
	R8695	D1BA3742A023	M 37.4 KOHM,F.1/16 W	1	PAVCTH
	R8705	D0GA103JA023	M10KOHM, J.1/16 W	1	
	R8707	D0GBR00J0004	M 0 OHM J 1/10W	1	
	R8718	D0GBR00J0004	M 0 OHM J 1/10W	1	
	R8741	D0GA360JA023	M 36 OHM, J,1/16W	1	
	R8742	D0GA223JA023	M 22K OHM J 1/16W	1	
	R8746	D1BA6802A023	M 68 KOHM,F.1/16 W	1	PAVCTH
	R8747	D1BA2102A023	M 21KOHM,F,1/16W	1	PAVCTH
	R8751	D0GB563ZA038	M 56KOHM, J,1/10W	1	PAVCTH
	R8752	D0GB103ZA038	M 10K OHM J 1/10W	1	PAVCTH
	R8771	D0GA272JA023	M 2.7KOHM, J.1/16W	1	
	R8772	D0GA332JA023	M 3.3KOHM, J,1/16W	1	
	R8773	D0GA102JA023	M1KOHM, J.1/16 W	1	
	R8775	D0GA104JA023	M100KOHM, J.1/16 W	1	
	R8776	D0GA102JA023	M1KOHM, J.1/16 W	1	
	R8777	D0GA472JA023	M 4.7KOHM, J,1/16W	1	
	R8778	D0GA472JA023	M 4.7KOHM, J,1/16W	1	
	R8785	D0GA103JA023	M10KOHM, J.1/16 W	1	
	R8787	D0GA472JA023	M 4.7KOHM, J,1/16W	1	
	R8788	D0GA102JA023	M1KOHM, J.1/16 W	1	
	R8792	D0GA103JA023	M10KOHM, J.1/16 W	1	
	R8797	D1BA1200A023	M 120 OHM,F.1/16 W	1	PAVCTH
	R8798	D1BA56R0A023	M 56 OHM,F.1/16 W	1	PAVCTH
	R8801	D0GA103JA023	M10KOHM, J.1/16 W	1	
	R8802	D0GA103JA023	M10KOHM, J.1/16 W	1	
	R8804	D0GA103JA023	M10KOHM, J.1/16 W	1	
	R8806	D0GA103JA023	M10KOHM, J.1/16 W	1	

Safety	Ref. No.	Part No.	Part Name & Description	Q'ty	Remarks
	R8807	D0GA103JA023	M10KOHM, J.1/16 W	1	
	R8809	D1HY1034A012	NETWORK RESISTER	1	PAVCTH
	R8810	D0GA103JA023	M10KOHM, J.1/16 W	1	
	R8811	D0GA103JA023	M10KOHM, J.1/16 W	1	
	R8812	D0GA243JA023	M 24K OHM J 0.063W	1	
	R8815	D0GA103JA023	M10KOHM, J.1/16 W	1	
	R8817	D0GA103JA023	M10KOHM, J.1/16 W	1	
	R8824	D0GA103JA023	M10KOHM, J.1/16 W	1	
	R8826	D0GA103JA023	M10KOHM, J.1/16 W	1	
	R8827	D0GA103JA023	M10KOHM, J.1/16 W	1	
	R8833	D0GA103JA023	M10KOHM, J.1/16 W	1	
	R8848	D0GA103JA023	M10KOHM, J.1/16 W	1	
	R8850	D0GA103JA023	M10KOHM, J.1/16 W	1	
	R8851	D0GA103JA023	M10KOHM, J.1/16 W	1	
	R8853	D0GA103JA023	M10KOHM, J.1/16 W	1	
	R8854	D1HY1038A012	NETWORK RESISTER	1	PAVCTH
	R8855	D0GA103JA023	M10KOHM, J.1/16 W	1	
	R8903	D1HY6808A012	NETWORK RESISTER	1	PAVCTH
	R8906	D0GA472JA023	M 4.7KOHM, J,1/16W	1	
	R8909	D0GA272JA023	M 2.7KOHM, J.1/16W	1	
	R8910	D0GA103JA023	M10KOHM, J.1/16 W	1	
	R8914	D0GA472JA023	M 4.7KOHM, J,1/16W	1	
	R8917	D0GA103JA023	M10KOHM, J.1/16 W	1	
	R8918	D0GA103JA023	M10KOHM, J.1/16 W	1	
	R8919	D0GA103JA023	M10KOHM, J.1/16 W	1	
	R8920	D0GA103JA023	M10KOHM, J.1/16 W	1	
	R8921	D0GA223JA023	M 22K OHM J 1/16W	1	
	R8922	D0GA103JA023	M10KOHM, J.1/16 W	1	
	R8923	D0GA103JA023	M10KOHM, J.1/16 W	1	
	R8924	D0GA103JA023	M10KOHM, J.1/16 W	1	
	R9039	D0GA473JA023	M 47KOHM, J,1/16W	1	
	R9105	D0GA473JA023	M 47KOHM, J,1/16W	1	
	R9117	D0GB203ZA038	M 20KOHM J 1/10W	1	PAVCTH
	R9118	D0GB123ZA038	M 12KOHM,J.1/10W	1	PAVCTH
	R9126	D0GA101JA023	M 100 OHM, J,1/16W	1	
	R9160	D0GA103JA023	M10KOHM, J.1/16 W	1	
	R9163	D0GA103JA023	M10KOHM, J.1/16 W	1	
	R9164	D0GA103JA023	M10KOHM, J.1/16 W	1	
	R9165	D0GA472JA023	M 4.7KOHM, J,1/16W	1	
	R9168	D0GA472JA023	M 4.7KOHM, J,1/16W	1	
	R9198	D1HY6804A012	NETWORK RESISTER	1	PAVCTH
	R9199	D0GA473JA023	M 47KOHM, J,1/16W	1	
	R9205	D0GA122JA023	M 1.2KOHM, J,1/16W	1	
	R9206	D0GA472JA023	M 4.7KOHM, J,1/16W	1	
	R9208	D1HY6804A012	NETWORK RESISTER	1	PAVCTH
	R9209	D1HY6808A012	NETWORK RESISTER	1	PAVCTH
	R9231	D0GA101JA023	M 100 OHM, J,1/16W	1	
	R9232	D0GA101JA023	M 100 OHM, J,1/16W	1	
	R9246	D0GA104JA023	M100KOHM, J.1/16 W	1	
	R9247	D0GA680JA023	M 68 OHM, J,1/16W	1	
	R9248	D0GA473JA023	M 47KOHM, J,1/16W	1	
	R9249	D0GA472JA023	M 4.7KOHM, J,1/16W	1	
	R9250	D0GA472JA023	M 4.7KOHM, J,1/16W	1	
	R9252	D0GA360JA023	M 36 OHM, J,1/16W	1	
	R9255	D0GA360JA023	M 36 OHM, J,1/16W	1	
	R9256	D0GA272JA023	M 2.7KOHM, J.1/16W	1	
	R9320	D0GA182JA023	M 1.8KOHM, J,0.063W	1	
	R9321	D0GA105JA023	M 1M OHM, J,1/16W	1	
	R9324	D0GA162JA023	M 1.6KOHM, J,1/16W	1	PAVCTH
	R9325	D0GA162JA023	M 1.6KOHM, J,1/16W	1	PAVCTH
	R9326	D0GA162JA023	M 1.6KOHM, J,1/16W	1	PAVCTH
	R9327	D0GA162JA023	M 1.6KOHM, J,1/16W	1	PAVCTH

Safety	Ref. No.	Part No.	Part Name & Description	Q'ty	Remarks
	R9400	D1HY1038A012	NETWORK RESISTER	1	PAVCTH
	R9401	D1HY1038A012	NETWORK RESISTER	1	PAVCTH
	R9404	D1HY1038A012	NETWORK RESISTER	1	PAVCTH
	R9405	D1HY6808A012	NETWORK RESISTER	1	PAVCTH
	R9503	D0GA103JA023	M10KOHM, J.1/16 W	1	
	R9608	D1HY2208A012	NETWORK RESISTER	1	PAVCTH
	R9610	D1HY2208A012	NETWORK RESISTER	1	PAVCTH
	R9802	D1BA3742A023	M 37.4 KOHM,F.1/16 W	1	PAVCTH
	R9803	F1G1A105A047	C 1UF 10V	1	
	R9813	D0GA103JA023	M10KOHM, J.1/16 W	1	
	R9907	D0GA101JA023	M 100 OHM, J,1/16W	1	
	R9935	D0GA680JA023	M 68 OHM, J,1/16W	1	
	R9937	D0GA680JA023	M 68 OHM, J,1/16W	1	
	R9941	D0GA102JA023	M1KOHM, J.1/16 W	1	
	R9943	D0GA102JA023	M1KOHM, J.1/16 W	1	
	R9946	D0GA103JA023	M10KOHM, J.1/16 W	1	
	R16001	D0GF7R5JA047	M 7.5 OHM,J, 1/3W	1	
	R16002	D0GF7R5JA047	M 7.5 OHM,J, 1/3W	1	
	R16021	D0GF7R5JA047	M 7.5 OHM,J, 1/3W	1	
	R16022	D0GF7R5JA047	M 7.5 OHM,J, 1/3W	1	
	R16031	D0GF473JA048	M 47KOHM,J,1/3W	1	
	R16032	D0GF473JA048	M 47KOHM,J,1/3W	1	
	R16041	D0GF5R6JA047	M 5.6 OHM,J, 1/3W	1	
	R16051	D0GF5R6JA047	M 5.6 OHM,J, 1/3W	1	
	R16072	D0D2100JA038	W 100 OHM,2W	1	PAVCTH
	R16101	D0GD150JA059	M 15 OHM,J,1/4W	1	
	R16102	D0GD150JA059	M 15 OHM,J,1/4W	1	
	R16105	D0GF474JA048	M 470KOHM,J,1/3W	1	
	R16109	D0GD100JA059	M 10 OHM,J,1/4W	1	
	R16116	D0GB473JA065	M 47KOHM J. 1/10W	1	
	R16130	D0GB103JA065	M 10K OHM J 1/10W	1	
	R16132	D0GB220JA065	M 22 OHM J 1/10W	1	
	R16133	D1BD2700A066	M 270KOHM,F.1/8W	1	PAVCTH
	R16137	D0GZ1R0JA020	M 1 OHM, J,1/2W	1	
	R16138	D0GF911JA048	M 910 OHM,J,1/4W	1	PAVCTH
	R16139	D0GB103JA065	M 10K OHM J 1/10W	1	
	R16152	D0GB220JA065	M 22 OHM J 1/10W	1	
	R16153	D1BD2700A066	M 270KOHM,F.1/8W	1	PAVCTH
	R16191	D1BD2700A066	M 270KOHM,F.1/8W	1	PAVCTH
	R16192	D0GB103JA065	M 10K OHM J 1/10W	1	
	R16193	D0GD750JA052	M 75 OHM,J,1/8W	1	
	R16195	D0GF1R0JA047	M 1 OHM,J,1/3W	1	
	R16230	D0GD470JA052	M 47 OHM,J,1/8W	1	
	R16231	D1H84724A041	NETWORK RESISTER	1	PAVCTH
	R16241	D1H84704A041	NETWORK RESISTER	1	PAVCTH
	R16242	D1H84724A041	NETWORK RESISTER	1	PAVCTH
	R16244	D0GB223JA065	M 22KOHM,J,1/10W	1	
	R16252	D0GF563JA048	M 56 KOHM,J,1/3W	1	
	R16253	D1BD1003A066	M 100KOHM,F.1/8 W	1	
	R16254	D1BD4422A066	M 44.2KOHM,F.1/8W	1	PAVCTH
	R16255	D0GB103JA065	M 10K OHM J 1/10W	1	
	R16257	D0GB473JA065	M 47KOHM J. 1/10W	1	
	R16280	D0GB222JA065	M 2.2KOHM,J,1/10W	1	
	R16283	D0GB473JA065	M 47KOHM J. 1/10W	1	
	R16285	D1H86234A041	NETWORK RESISTER	1	PAVCTH
	R16287	D0GF334JA047	M 330KOHMJ,1/3W	1	
	R16288	D0GF334JA047	M 330KOHMJ,1/3W	1	
	R16289	D0GF334JA047	M 330KOHMJ,1/3W	1	
	R16290	D0GF334JA047	M 330KOHMJ,1/3W	1	
	R16291	D0GB103JA065	M 10K OHM J 1/10W	1	
	R16307	D1BD5232A147	M 52.3KOHM,F.1/8W	1	PAVCTH
	R16309	D0GF273JA054	M 27 KOHM. 1/2W	1	PAVCTH

Safety	Ref. No.	Part No.	Part Name & Description	Q'ty	Remarks
	R16311	D0GF273JA054	M 27 KOHM. 1/2W	1	PAVCTH
	R16317	D1BD5762A147	M 57.6KOHM,F.1/8W	1	PAVCTH
	R16318	D1BD5762A147	M 57.6KOHM,F.1/8W	1	PAVCTH
	R16319	D1BD2491A147	M 2.49KOHM,F.1/8W	1	PAVCTH
	R16320	ERJ14YJ683	M 68KOHM, J. 1/4W	1	
	R16330	D0GB102JA065	M 1KOHM,J,1/10W	1	
	R16332	D0GB474JA065	M 470KOHM,J,1/10W	1	
	R16334	D0GB472JA065	M 4.7KOHM, J,1/10W	1	
	R16335	D0GB102JA065	M 1KOHM,J,1/10W	1	
	R16340	D0GD104JA052	M 100KOHM,J,1/8W	1	
	R16341	D0GD104JA052	M 100KOHM,J,1/8W	1	
	R16401	D0GF7R5JA047	M 7.5 OHM,J, 1/3W	1	
	R16402	D0GF7R5JA047	M 7.5 OHM,J, 1/3W	1	
	R16411	D1BD2700A066	M 270KOHM,F.1/8W	1	PAVCTH
	R16412	D1BD2700A066	M 270KOHM,F.1/8W	1	PAVCTH
	R16414	D0GB103JA065	M 10K OHM J 1/10W	1	
	R16416	D0GB103JA065	M 10K OHM J 1/10W	1	
	R16421	D0GF7R5JA047	M 7.5 OHM,J, 1/3W	1	
	R16422	D0GF7R5JA047	M 7.5 OHM,J, 1/3W	1	
	R16432	D0D2100JA038	W 100 OHM,2W	1	PAVCTH
	R16441	D0GF5R6JA047	M 5.6 OHM,J, 1/3W	1	
	R16451	D0GF5R6JA047	M 5.6 OHM,J, 1/3W	1	
	R16466	D0GF473JA048	M 47KOHM,J,1/3W	1	
	R16467	D0GF473JA048	M 47KOHM,J,1/3W	1	
	R16471	D0GB203JA065	M 20KOHM J 1/10W	1	
	R16472	D0GB222JA065	M 2.2KOHM,J,1/10W	1	
	R16473	D0GD561JA052	M 560 OHM,J,1/8W	1	
	R16474	D0GB102JA065	M 1KOHM,J,1/10W	1	
	R16475	D0GB472JA065	M 4.7KOHM, J,1/10W	1	
	R16476	D0GB222JA065	M 2.2KOHM,J,1/10W	1	
	R16477	D0GB103JA065	M 10K OHM J 1/10W	1	
	R16490	D1BD1203A147	M 120KOHM,F.1/8 W	1	PAVCTH
	R16491	D1BD1203A147	M 120KOHM,F.1/8 W	1	PAVCTH
	R16492	D1BD1203A147	M 120KOHM,F.1/8 W	1	PAVCTH
	R16493	D1BD5111A147	M 5.11KOHM,F.1/8W	1	PAVCTH
	R16501	D0GB220JA065	M 22 OHM J 1/10W	1	
	R16502	D0GB220JA065	M 22 OHM J 1/10W	1	
	R16505	D0GF102JA048	M 1.0 KOHM,J,1/3W	1	
	R16508	D0GB221JA065	M 220 OHM J 1/10W	1	
	R16522	D0GB221JA065	M 220 OHM J 1/10W	1	
	R16534	D0GF911JA048	M 910 OHM,J,1/4W	1	PAVCTH
	R16536	D0GF1R0JA047	M 1 OHM,J,1/3W	1	
	R16537	D0GF1R0JA047	M 1 OHM,J,1/3W	1	
	R16561	D1H84704A041	NETWORK RESISTER	1	PAVCTH
	R16562	D1H84704A041	NETWORK RESISTER	1	PAVCTH
	R16563	D1H84704A041	NETWORK RESISTER	1	PAVCTH
	R16564	D0GB470JA065	M 47 OHM,J,1/10W	1	
	R16581	D0GB103JA065	M 10K OHM J 1/10W	1	
	R16582	D0GF563JA048	M 56 KOHM,J,1/3W	1	
	R16583	D1BD1003A066	M 100KOHM,F.1/8 W	1	
	R16584	D1BD3742A066	M 37.4KOHM,F.1/8W	1	PAVCTH
	R16585	D0GB473JA065	M 47KOHM J. 1/10W	1	
	R16587	D0GB222JA065	M 2.2KOHM,J,1/10W	1	
	R16588	D0GB223JA065	M 22KOHM,J,1/10W	1	
	R16590	D0GB221JA065	M 220 OHM J 1/10W	1	
	R16601	D0GF1R0JA047	M 1 OHM,J,1/3W	1	
	R16602	D0GB220JA065	M 22 OHM J 1/10W	1	
	R16604	D0GD331JA052	M 330 OHM,J,1/8W	1	
	R16607	D1BB2262A073	M 22.6KOHM,F.1/10W	1	PAVCTH
	R16609	D0GF102JA047	M 1.0 KOHM,J,1/3W	1	
	R16610	D0GB104JA065	M 100KOHM J 1/10W	1	
	R16612	D0GD470JA059	M 47 OHM,J,1/4W	1	

Safety	Ref. No.	Part No.	Part Name & Description	Q'ty	Remarks
	R16615	D1BB4990A073	M 499 OHM,F.1/10W	1	PAVCTH
	R16616	D1BB4321A073	M 4.32KOHM,F.1/10W	1	PAVCTH
	R16618	D0GB100JA065	M 10 OHM J 1/10W	1	
	R16622	D0GD561JA052	M 560 OHM,J,1/8W	1	
	R16623	D0GD561JA052	M 560 OHM,J,1/8W	1	
	R16646	D0GF152JA048	M 1.5 KOHM,J,1/4W	1	PAVCTH
	R16647	D0GF152JA048	M 1.5 KOHM,J,1/4W	1	PAVCTH
	R16649	D0GD101JA059	M 100 OHM,J,1/4W	1	
	R16650	D0GB473JA065	M 47KOHM J. 1/10W	1	
	R16651	D0GF1R0JA047	M 1 OHM,J,1/3W	1	
	R16652	D0GF152JA048	M 1.5 KOHM,J,1/4W	1	PAVCTH
	R16658	D1BD6491A147	M 6.49KOHM,F.1/8W	1	PAVCTH
	R16660	D1BD1741A066	M17.4KOHM,F.1/8W	1	
	R16661	D0GD100JA059	M 10 OHM,J,1/4W	1	
	R16663	D1BD9091A147	M 9.09KOHM,F.1/8W	1	PAVCTH
	R16665	D0GD222JA052	M 2.2KOHM,J,1/8W	1	
	R16666	D1BB1003A074	M 100 KOHM,F.1/10 W	1	PAVCTH
	R16674	D0GF102JA047	M 1.0 KOHM,J,1/3W	1	
	R16675	D0GB103JA065	M 10K OHM J 1/10W	1	
	R16676	D1BD2700A066	M 270KOHM,F.1/8W	1	PAVCTH
	R16678	D0GF102JA047	M 1.0 KOHM,J,1/3W	1	
	R16682	D0GD100JA059	M 10 OHM,J,1/4W	1	
	R16683	D0GD100JA059	M 10 OHM,J,1/4W	1	
	R16685	D1BD1500A066	M 150 OHM,F.1/8 W	1	PAVCTH
	R16686	D0GB103JA065	M 10K OHM J 1/10W	1	
	R16696	D0D52R2KA005	W 2.2 OHM,K,5W	1	
	R16719	D0GB220JA065	M 22 OHM J 1/10W	1	
	R16721	D1H82204A041	NETWORK RESISTER	1	PAVCTH
	R16761	D0GD100JA059	M 10 OHM,J,1/4W	1	
	R16763	D0GB473JA065	M 47KOHM J. 1/10W	1	
	R16772	D0GB472JA065	M 4.7KOHM, J,1/10W	1	
	R16773	D0GD102JA052	M 1.0KOHM,J,1/8W	1	
	R16776	D0GD470JA052	M 47 OHM,J,1/8W	1	
	R16786	D1BD5902A066	M 59 KOHM,F.1/8W	1	PAVCTH
	R16815	D0GB103JA065	M 10K OHM J 1/10W	1	
	R16821	D0GD104JA052	M 100KOHM,J,1/8W	1	
	R16822	D1BD8202A066	M 750KOHM,F.1/8W	1	PAVCTH
	R16823	D1BD6192A066	M 61.9KOHM,F.1/8W	1	PAVCTH
	R16824	D1BD3742A066	M 37.4KOHM,F.1/8W	1	PAVCTH
	R16825	D0GD104JA052	M 100KOHM,J,1/8W	1	
	R16826	D0GB472JA065	M 4.7KOHM, J,1/10W	1	
	R16829	D0GB102JA065	M 1KOHM,J,1/10W	1	
	R16831	D1BD6812A147	M 68.1KOHM,F.1/8W	1	PAVCTH
	R16832	D1BD7152A147	M 71.5KOHM,F.1/8W	1	PAVCTH
	R16833	D0GF683JA048	M 68 KOHM,J,1/4W	1	PAVCTH
	R16834	D0GF683JA048	M 68 KOHM,J,1/4W	1	PAVCTH
	R16835	D0GF683JA048	M 68 KOHM,J,1/4W	1	PAVCTH
	R16836	D0GF683JA048	M 68 KOHM,J,1/4W	1	PAVCTH
	R16839	ERG2FJS473D	M 47KOHM, J, 2W	1	
	R16840	ERG2FJS473D	M 47KOHM, J, 2W	1	
	R16841	D0GB472JA065	M 4.7KOHM, J,1/10W	1	
	R16842	D0GD102JA052	M 1.0KOHM,J,1/8W	1	
	R16844	ERA6YEB242	M 2.4KOHM, B 1/10W	1	
	R16845	D1BD6812A147	M 68.1KOHM,F.1/8W	1	PAVCTH
	R16846	D1BD5762A147	M 57.6KOHM,F.1/8W	1	PAVCTH
	R16847	D1BD6492A147	M 64.9KOHM,F.1/8W	1	PAVCTH
	R16851	D0GB474JA065	M 470KOHM,J,1/10W	1	
	R16852	D0GB474JA065	M 470KOHM,J,1/10W	1	
	R16856	D0GB102JA065	M 1KOHM,J,1/10W	1	
	R16873	ERA6YEB242	M 2.4KOHM, B 1/10W	1	
	R16891	D1BF6982A098	M 69.8 KOHM,F.1/4W	1	PAVCTH
	R16892	D1BF8252A098	M 82.5 KOHM,F.1/4W	1	PAVCTH

Safety	Ref. No.	Part No.	Part Name & Description	Q'ty	Remarks
	R16893	D1BF8252A098	M 82.5 KOHM,F.1/4W	1	PAVCTH
	R16894	D1BB3091A074	M 3.09KOHM,F.1/10W	1	PAVCTH
	R16895	D1BB7871A074	M 7.87 KOHM,F.1/10W	1	PAVCTH
	R16897	D1BB2262A073	M 22.6KOHM,F.1/10W	1	PAVCTH
	R16898	D1BB9760A073	M 976 OHM,F.1/10W	1	PAVCTH
	R16902	D0GB6R2JA065	M 6.2 OHM J 1/10W	1	
	R16903	D1BB1471A073	M 1.47 KOHM,F.1/10 W	1	PAVCTH
	R16904	D1BB5231A073	M 5.23 KOHM,F.1/10W	1	PAVCTH
	R16919	D0GB100JA065	M 10 OHM J 1/10W	1	
	R16920	D0GB101JA065	M 100 OHM,J,1/10W	1	
	R16921	D1BB4991A073	M 4.99 KOHM,F.1/10W	1	PAVCTH
	R16922	D1BB2152A073	M 21.5 KOHM,F.1/10 W	1	PAVCTH
	R16923	D1BB8251A073	M 8.25 KOHM,F.1/10W	1	PAVCTH
	R16927	D0GB221JA065	M 220 OHM J 1/10W	1	
	R16931	D1BF2R70A073	M 2.7 OHM,F.1/8W	1	PAVCTH
	R16932	D0GD223JA052	M 22KOHM,J,1/8W	1	
	R16937	D0GB184JA065	M 180KOHM J 1/10W	1	
	R16939	D0GB472JA065	M 4.7KOHM, J,1/10W	1	
	R16940	D0GB472JA065	M 4.7KOHM, J,1/10W	1	
	R16945	D0GB471JA065	M 470 OHM,J,1/10W	1	
	R16946	D0GB221JA065	M 220 OHM J 1/10W	1	
	R16947	D0GB472JA065	M 4.7KOHM, J,1/10W	1	
	R16948	D0GB471JA065	M 470 OHM,J,1/10W	1	
	R16991	D0GD104JA052	M 100KOHM,J,1/8W	1	
	R16992	D0GD104JA052	M 100KOHM,J,1/8W	1	
	R17101	D0GB101JA065	M 100 OHM,J,1/10W	1	
	R17102	D0GB101JA065	M 100 OHM,J,1/10W	1	
	R17103	D0GB101JA065	M 100 OHM,J,1/10W	1	
	R17104	D1BB49R9A073	M 49.9 OHM,F.1/10W	1	PAVCTH
	R17105	D1BB49R9A073	M 49.9 OHM,F.1/10W	1	PAVCTH
	R17106	D1BB49R9A073	M 49.9 OHM,F.1/10W	1	PAVCTH
	R17107	D0GB101JA065	M 100 OHM,J,1/10W	1	
	R17108	D1BB49R9A073	M 49.9 OHM,F.1/10W	1	PAVCTH
	R17109	D0GF1R0JA047	M 1 OHM,J,1/3W	1	
	R17111	D0GF1R0JA047	M 1 OHM,J,1/3W	1	
	R17113	D0GF1R0JA047	M 1 OHM,J,1/3W	1	
	R17118	D0GB101JA065	M 100 OHM,J,1/10W	1	
	R17119	D0GB101JA065	M 100 OHM,J,1/10W	1	
	R17120	D0GB101JA065	M 100 OHM,J,1/10W	1	
	R17121	D0GB101JA065	M 100 OHM,J,1/10W	1	
	R17122	D0GF1R0JA047	M 1 OHM,J,1/3W	1	
	R17124	D0GF1R0JA047	M 1 OHM,J,1/3W	1	
	R17134	D0GD224JA052	M 220KOHM,J,1/8W	1	
	R17151	D1BB49R9A073	M 49.9 OHM,F.1/10W	1	PAVCTH
	R17152	D1BB49R9A073	M 49.9 OHM,F.1/10W	1	PAVCTH
	R17153	D1BB49R9A073	M 49.9 OHM,F.1/10W	1	PAVCTH
	R17154	D1BB49R9A073	M 49.9 OHM,F.1/10W	1	PAVCTH
	R17196	D0GB331JA065	M330 OHM J 1/10W	1	
	R17199	D0GD151JA059	M 150 OHM,J,1/4W	1	
	R17201	D0GB101JA065	M 100 OHM,J,1/10W	1	
	R17202	D0GB101JA065	M 100 OHM,J,1/10W	1	
	R17203	D0GB101JA065	M 100 OHM,J,1/10W	1	
	R17204	D0GB101JA065	M 100 OHM,J,1/10W	1	
	R17205	D0GB101JA065	M 100 OHM,J,1/10W	1	
	R17206	D0GB101JA065	M 100 OHM,J,1/10W	1	
	R17207	D0GB101JA065	M 100 OHM,J,1/10W	1	
	R17208	D0GB101JA065	M 100 OHM,J,1/10W	1	
	R17209	D0GB101JA065	M 100 OHM,J,1/10W	1	
	R17210	D0GB101JA065	M 100 OHM,J,1/10W	1	
	R17211	D0GB101JA065	M 100 OHM,J,1/10W	1	
	R17212	D0GB101JA065	M 100 OHM,J,1/10W	1	
	R17221	D0GF1R0JA047	M 1 OHM,J,1/3W	1	

Safety	Ref. No.	Part No.	Part Name & Description	Q'ty	Remarks
	R17223	D0GF1R0JA047	M 1 OHM,J,1/3W	1	
	R17225	D0GF1R0JA047	M 1 OHM,J,1/3W	1	
	R17227	D0GF1R0JA047	M 1 OHM,J,1/3W	1	
	R17229	D0GF1R0JA047	M 1 OHM,J,1/3W	1	
	R17231	D0GF1R0JA047	M 1 OHM,J,1/3W	1	
	R17241	D0GB470JA065	M 47 OHM,J,1/10W	1	
	R17242	D0GB470JA065	M 47 OHM,J,1/10W	1	
	R17243	D0GB470JA065	M 47 OHM,J,1/10W	1	
	R17244	D0GB681JA065	M 680 OHM,J,1/10W	1	
	R17245	D0GB681JA065	M 680 OHM,J,1/10W	1	
	R17246	D1H84704A041	NETWORK RESISTER	1	PAVCTH
	R17247	D1H84704A041	NETWORK RESISTER	1	PAVCTH
	R17248	D1H86814A041	NETWORK RESISTER	1	PAVCTH
	R17261	D0GD224JA052	M 220KOHM,J,1/8W	1	
	R17296	D0GB331JA065	M330 OHM J 1/10W	1	
	R17311	D0GB101JA065	M 100 OHM,J,1/10W	1	
	R17312	D0GB101JA065	M 100 OHM,J,1/10W	1	
	R17313	D0GB101JA065	M 100 OHM,J,1/10W	1	
	R17314	D0GB101JA065	M 100 OHM,J,1/10W	1	
	R17315	D0GB101JA065	M 100 OHM,J,1/10W	1	
	R17317	D0GB101JA065	M 100 OHM,J,1/10W	1	
	R17318	D0GB101JA065	M 100 OHM,J,1/10W	1	
	R17320	D0GB101JA065	M 100 OHM,J,1/10W	1	
	R17323	D0GB470JA065	M 47 OHM,J,1/10W	1	
	R17324	D0GB681JA065	M 680 OHM,J,1/10W	1	
	R17325	D0GF1R0JA047	M 1 OHM,J,1/3W	1	
	R17327	D0GF1R0JA047	M 1 OHM,J,1/3W	1	
	R17328	D1H86814A041	NETWORK RESISTER	1	PAVCTH
	R17329	D0GF1R0JA047	M 1 OHM,J,1/3W	1	
	R17331	D0GF1R0JA047	M 1 OHM,J,1/3W	1	
	R17341	D1H84704A041	NETWORK RESISTER	1	PAVCTH
	R17343	D0GD224JA052	M 220KOHM,J,1/8W	1	
	R17350	D0GB470JA065	M 47 OHM,J,1/10W	1	
	R17351	D0GB681JA065	M 680 OHM,J,1/10W	1	
	R17395	D0GD151JA059	M 150 OHM,J,1/4W	1	
	RM2810	B3RBB0000018	REMOTE SENSOR	1	
	SC2	K1KY02C00002	2P CONNECTOR	1	PAVCTH
	SC20	K1MY30BA0345	30P CONNECTOR	1	
	SC41	K1KA09AA0707	9P CONNECTOR	1	
	SC42	K1KA09AA0707	9P CONNECTOR	1	
	SC46	K1KA09AA0707	9P CONNECTOR	1	
	SC50	K1KA02AA0193	2P CONNECTOR	1	
	SN2810	B3JB00000116	IC	1	
	SS11	K1KY02C00002	2P CONNECTOR	1	PAVCTH
	SS33	K1MY20BA0345	20P CONNECTOR	1	
	SS52	K1MY13BA0343	13P CONNECTOR	1	
	SS54	K1MY13BA0343	13P CONNECTOR	1	
	SS55	K1MY13BA0343	13P CONNECTOR	1	
	SS57	K1MY13BA0443	13P CONNECTOR	1	
	SW2050	K0H1BA000445	SWITCH	1	
	SW2051	K0H1BA000445	SWITCH	1	
	SW2052	K0H1BA000445	SWITCH	1	
	SW2053	K0H1BA000445	SWITCH	1	
	SW2054	K0H1BA000445	SWITCH	1	
	SW2056	K0H1BA000445	SWITCH	1	
	T16471	G4DYA0000358	SWITCHING TRANS	1	PAVCTH

Safety	Ref. No.	Part No.	Part Name & Description	Q'ty	Remarks
	T16472	G4DYA0000252	SWITCHING TRANS	1	
⚠	TU6705	ENVS9301D5F	TUNER	1	PAVCTH
	X8300	H0J245500110	CRYSTAL	1	
	X8651	H0J250500120	CRYSTAL	1	PAVCTH
	X9300	H0J200500091	CRYSTAL	1	
	ZA16001	K4AZ01D00004	TERMINAL	1	
	ZA16002	K4AZ01D00004	TERMINAL	1	
	ZA16402	K4AZ01D00004	TERMINAL	1	
	ZA16403	K4AZ01D00004	TERMINAL	1	

Model No. : TH-P50UT50A/D/G/K/M/P/S/V/Z Exploded View 1

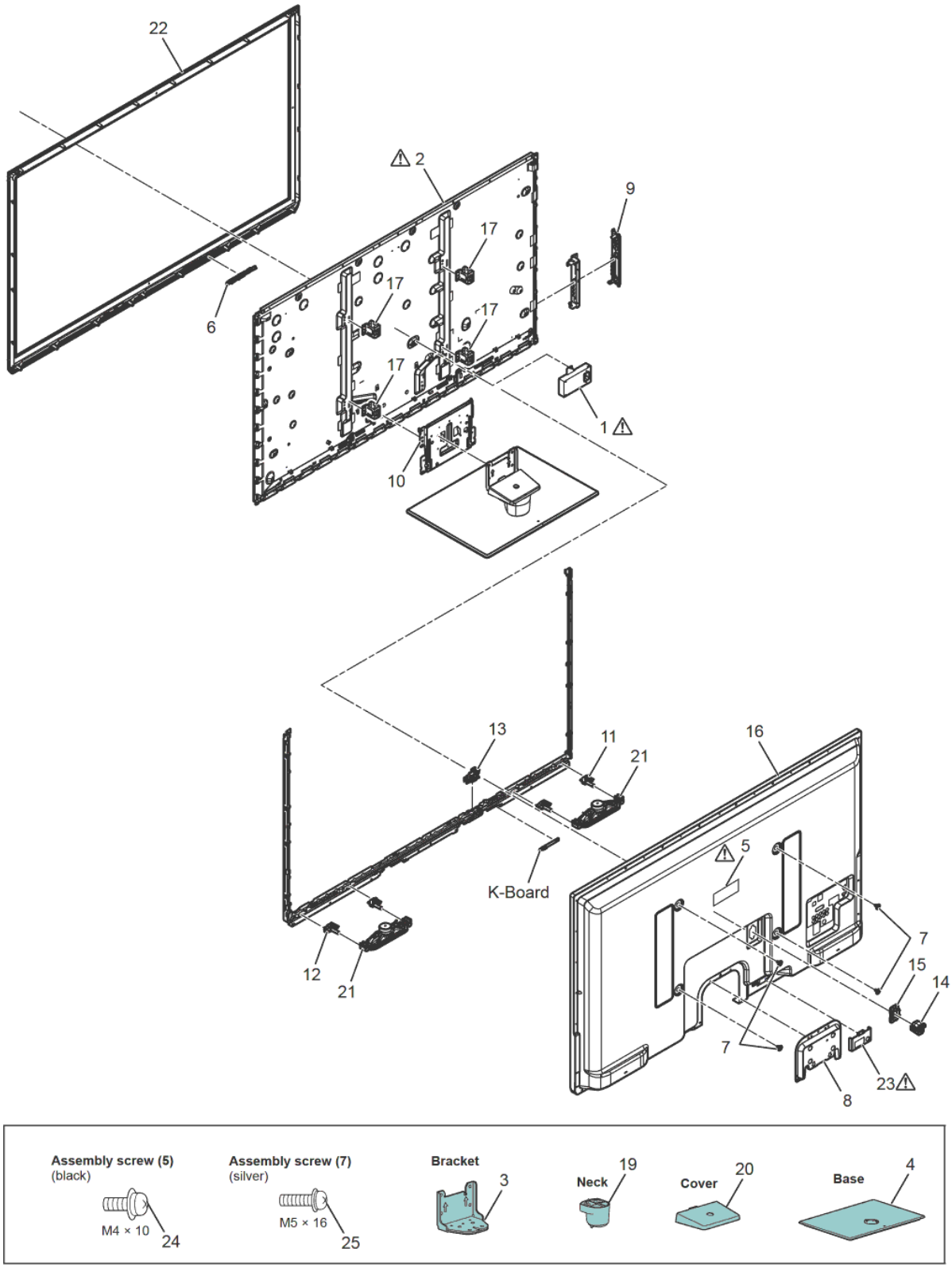

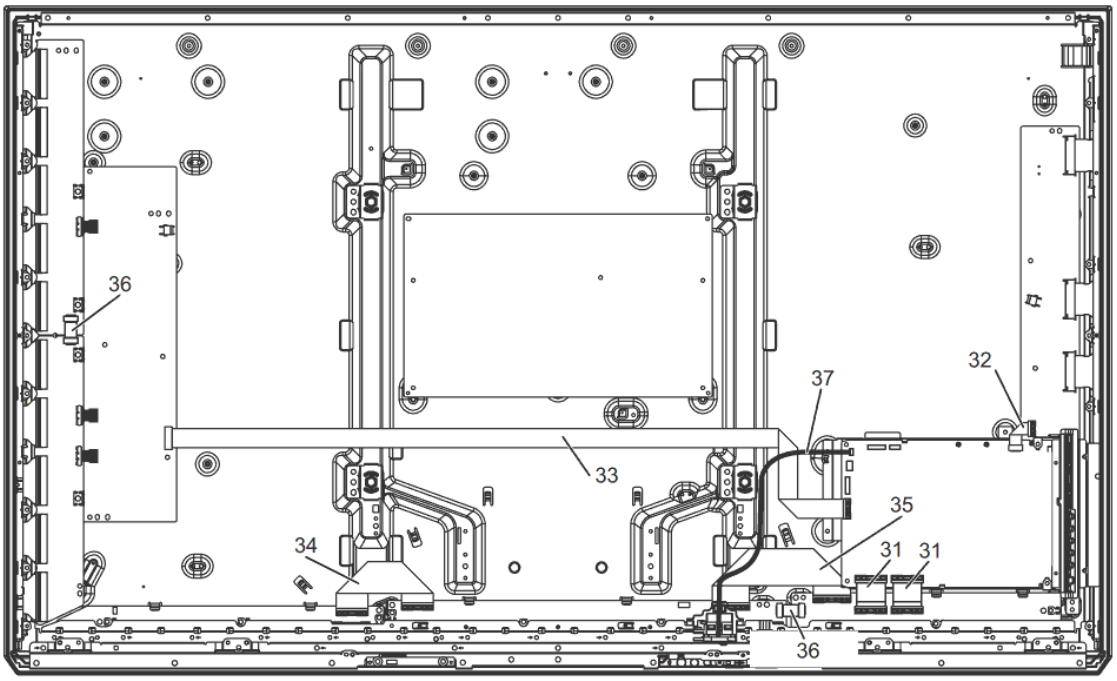
36
37
32
33
35
34
31
31
36

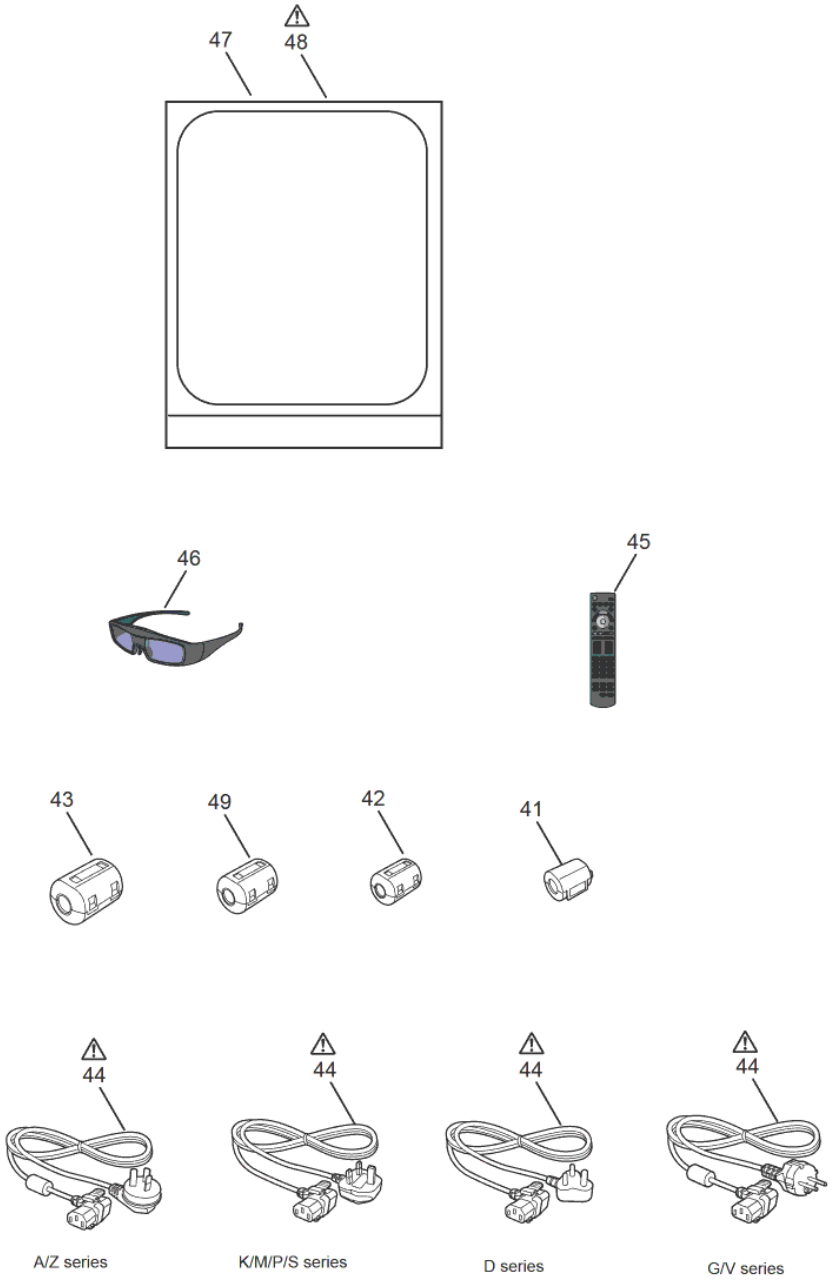
47
48
46
45
43
49
42
41
44
44
44
44
A/Z series
K/M/P/S series
D series
G/V series

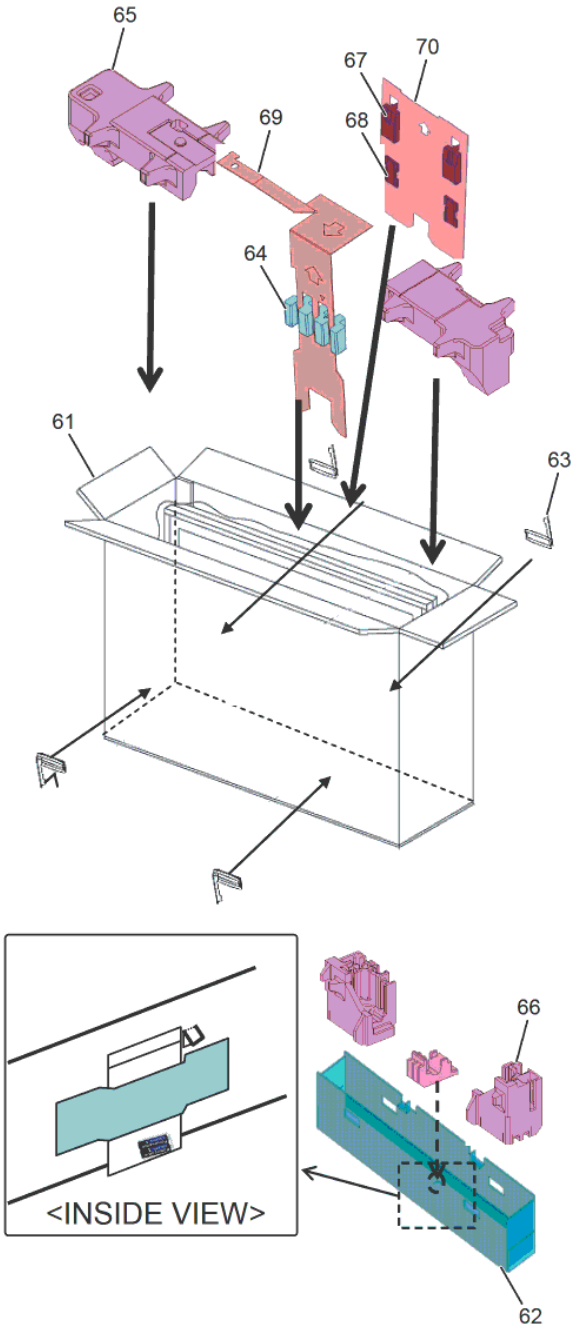
65
67
70
69
68
64
61
63
66
<INSIDE VIEW>
62

Safety	Ref. No.	Part No.	Part Name & Description	Q'ty	Remarks
	41	J0KG00000011	FERRITE CORE	1	(A) (Z)
	42	J0KG00000036	FERRITE CORE FOR USB CABLE	2	(A) (Z) PAVCTH
	43	J0KG00000146	FERRITE CORE PACK FOR LAN CABLE	1	(A) (Z)
	49	J0KG00000014	(FERRITE CORE FOR RF CABLE)	1	(A) (Z) PAVCTH
⚠	1	K2AHYH000052	AC-INLET WITH CABLE	1	PAVCTH
⚠	44	K2CN3YY00016	AC_CORD	1	(G) (V) PAVCTH
⚠	44	K2CT3YY00061	AC_CORD	1	(K) (M) (S) PAVCTH
⚠	44	K2CT3YY00062	AC_CORD	1	(P) PAVCTH
⚠	44	K2CZ3YY00042	AC_CORD	1	(D) PAVCTH
⚠	44	K2CK3YY00065	AC_CORD	1	(A) (Z) PAVCTH
⚠	2	MD50F15C9J	PLASMA DISPLAY PANEL	1	
	45	N2QAYB000747	REMOTE CONTROL	1	(G) (S) (V) (A) (Z) PAVCTH
	45	N2QAYB000750	REMOTE CONTROL	1	(D) (K) (M) (P) PAVCTH
	46	N5ZZ00000250	3D EYEWEAR	1	(A) (Z) PAVCTH
		T4FP1505Q	TAPE	1	PAVCTH
	3	TBL5ZA3246	STAND METAL	1	PAVCTH
	4	TBL5ZX0413	PEDESTAL STAND	1	PAVCTH
⚠	5	TBM4TC3381	NAME PLATE	1	(M) PAVCTH
⚠	5	TBM4TC3391	NAME PLATE	1	(S) PAVCTH
⚠	5	TBM4TC3401	NAME PLATE	1	(G) PAVCTH
⚠	5	TBM4TC3411	NAME PLATE	1	(K) PAVCTH
⚠	5	TBM4TC3431	NAME PLATE	1	(V) PAVCTH
⚠	5	TBM4TC3441	NAME PLATE	1	(D) PAVCTH
⚠	5	TBM4TC3451	NAME PLATE	1	(P) PAVCTH
⚠	5	TBM4TC3341	NAME PLATE	1	(A) PAVCTH
⚠	5	TBM4TC3361	NAME PLATE	1	(Z) PAVCTH
		TBM4TU0861	SIDE TERMINAL SHEET	1	PAVCTH
		THEC141J	SCREW(CAB:8)	8	
		THEC1509	SCREW(BC:4 HDMI:2 TU_SH:4 PEDE_CO:4 BT:1	15	chap.9.2.5.(2)
		THEJ036J	SCREW(K:1 CONT_A-B:6 STA_BRA:2)	9	
		THEL0239	SCREW(AC_CODE:2)	2	
		THEL052Z	SCREW	4	
		THTD030J	SCREW(BC-CAB:14 STA_BRA:2 CAB-CONT:1)	17	chap.9.2.5.(1)
	6	TKK5ZC50251	LED PANEL	1	PAVCTH
	7	TKKL5493	M8 CAP	4	chap.9.2.5.(4)
	8	TKP5ZA12801	STAND BRACKET COVER	1	PAVCTH
	9	TKP5ZA23401	SIDE TERMINAL COVER	1	PAVCTH
	10	TXFKZ01QTUA	STAND BRACKET PLATE	1	PAVCTH
		TMKK496	RUBBER(IC8000)	1	PAVCTH
		TMKK498	RUBBER(IC9300)	1	PAVCTH
		TMKK503	RUBBER(L24*W19*T9 SC:2)	2	PAVCTH
		TMME268	CLAMPER	1	
		TMME415	SPACER	3	PAVCTH
	11	TMW4TX001	SP BRACKET L	2	
	12	TMW4TX002	SP BRACKET R	2	
	13	TMX5ZJ0021	BT CONNECTOR CLAMPER	1	PAVCTH
	14	TMXX073	AC CORD CLAMPER A	1	PAVCTH
	15	TMXX074	AC CORD CLAMPER B	1	PAVCTH
		TPAKK38	DRY PACK	1	(V) PAVCTH
	61	TPC4TA10501	CARTON BOX TOP	1	PAVCTH
	62	TPC4TA10601	CARTON BOX BOTTOM	1	PAVCTH
	63	TPD169487	JOINT	4	
	64	TPD4TA01241	FRONT CUSHION	1	(G) (K) (S) (V) (A) (Z) PAVCTH
	65	TPD4TA01451	TOP CUSHION	1	(G) (K) (S) (V) (A) (Z) PAVCTH
	66	TPD4TA01461	BOTTOM CUSHION	1	(G) (K) (S) (V) (A) (Z) PAVCTH
	65	TPD4TA01471	TOP CUSHION	1	(D) (M) (P) PAVCTH
	66	TPD4TA01481	BOTTOM CUSHION	1	(D) (M) (P) PAVCTH
	64	TPD4TA01851	FRONT CUSHION	1	(D) (M) (P) PAVCTH
	67	TPD4TA02281	REAR CUSHION	2	PAVCTH
	68	TPD4TA02291	REAR BOTTOM CUSHION	2	PAVCTH
	69	TPD4TF00521	FRONT CUSHION PAD	1	PAVCTH

Model No. : TH-P50UT50A/D/G/K/M/P/S/V/Z Parts List

Safety	Ref. No.	Part No.	Part Name & Description	Q'ty	Remarks
		TPD4TF0074	PEDESTAL BOX	1	PAVCTH
	70	TPD4TF00781	REAR CUSHION PAD	1	PAVCTH
		TPE4TB011	BAG (STAND ACCESSORY NECK)	1	PAVCTH
		TPE4TB012	BAG (STAND METAL)	1	PAVCTH
		TPE4TB013	BAG (STAND METAL COVER)	1	PAVCTH
		TPE4TH002	SET BAG	1	(D) (G) (K) (M) (P) (S) (A) (Z) PAVCTH
		TPE4TH038	SET BAG	1	(V) PAVCTH
	47	TPE4TP001	BAG (INSTRUCTION BOOK)	1	PAVCTH
		TPE4TP002	BAG FOR AC CORD	1	PAVCTH
		TPE4TP002	(BAG FOR FERRITE CORE)	1	(A) (Z) PAVCTH
⚠	48	TQB4TC0198-1	INSTRUCTION BOOK(ENGLISH)	1	(G) (S) (V) PAVCTH
⚠	48	TQB4TC0199-1	INSTRUCTION BOOK(S-CHINESE)	1	(S) PAVCTH
⚠	48	TQB4TC0200-1	INSTRUCTION BOOK(INDONESIA)	1	(G) PAVCTH
⚠	48	TQB4TC0201-1	INSTRUCTION BOOK(ENGLISH)	1	(D) (K) (M) (P) PAVCTH
⚠	48	TQB4TC0202-1	INSTRUCTION BOOK(S-CHINESE)	1	(K) PAVCTH
⚠	48	TQB4TC0204-1	INSTRUCTION BOOK(VIETNAMESE)	1	(V) PAVCTH
⚠	48	TQB4TC0205-1	INSTRUCTION BOOK(ARABIC)	1	(M) (P) PAVCTH
⚠	48	TQB4TC0197-1	INSTRUCTION BOOK(ENGLISH)	1	(A) (Z) PAVCTH
		TQD4T19018	FLYER FOR PEDESTAL	1	PAVCTH
	31	TSCKE0090003	CABLE(A31-C31)/(A32-C32)	2	PAVCTH
	32	TSCKZ0010018	CABLE(A33-SS33)	1	PAVCTH
	33	TSCKZ0010019	CABLE(A20-SC20)	1	PAVCTH
	34	TSCLE0010004	CABLE(C10-C20)	1	PAVCTH
	35	TSCLE0010005	CABLE(C26-C36)	1	PAVCTH
	36	TSXM217	CABLE(SU11-SD11/C27-C37)	2	
	16	TTU4TA0340	REAR COVER	1	(M) PAVCTH
	16	TTU4TA0341	REAR COVER	1	(S) PAVCTH
	16	TTU4TA0342	REAR COVER	1	(G) PAVCTH
	16	TTU4TA0343	REAR COVER	1	(K) PAVCTH
	16	TTU4TA0345	REAR COVER	1	(V) PAVCTH
	16	TTU4TA0346	REAR COVER	1	(D) PAVCTH
	16	TTU4TA0347	REAR COVER	1	(P) PAVCTH
	16	TTU4TA0284	REAR COVER	1	(A) PAVCTH
	16	TTU4TA0338	REAR COVER	1	(Z) PAVCTH
	17	TUX5ZA0131	M8 NUT METAL	4	PAVCTH
	19	TXFBL5Z0080	STAND ACCESSORY NECK ASSY	1	PAVCTH
	20	TXFBL5Z0082	STAND ACCESSORY COVER ASSY	1	PAVCTH
	21	TXFEA01QTUA	SPEAKER L/R ASSY	2	PAVCTH
		TXFKL01MSUA	TIP-PREVENTION PARTS ASSY	1	(A) (Z) PAVCTH
	22	TXFKY5Z0333	CABINET ASSY	1	PAVCTH
		TXFQZ02NJUM	CARTON LABEL ASSY	1	(M) PAVCTH
		TXFQZ02NMUK	CARTON LABEL ASSY	1	(K) PAVCTH
		TXFQZ02NYUP	CARTON LABEL ASSY	1	(P) PAVCTH
		TXFQZ02PBUV	CARTON LABEL ASSY	1	(V) PAVCTH
		TXFQZ02PDUD	CARTON LABEL ASSY	1	(D) PAVCTH
		TXFQZ02PDUS	CARTON LABEL ASSY	1	(S) PAVCTH
⚠		TXFQZ02PJUG	CARTON LABEL ASSY	1	(G) PAVCTH
		TXFQZ02PKUA	CARTON LABEL ASSY	1	(A) PAVCTH
		TXFQZ02QMUZ	CARTON LABEL ASSY	1	(Z) PAVCTH
		TXJA12SDUU	SPEAKER LEAD(A12-SPR/SPL)	1	PAVCTH
	37	TXJA50SDUU	WIRE(BT-A50)	1	PAVCTH
⚠	23	TXNBT1NGUM	BLUETOOTH ASSY	1	(D) (G) (K) (P) (S) (V) PAVCTH
⚠	23	TXNBT1NMUM	BLUETOOTH ASSY	1	(M) PAVCTH
⚠	23	TXNBT1PAUZ	BLUETOOTH ASSY	1	(A) (Z) PAVCTH
		XTV3+8GFJK	SCREW	2	chap.9.2.5.(3)
		XYN3+J10FJ	SCREW	5	
		XYN4+E6FJ	SCREW(INLET:1)	1	
	24	XYN4+F10FNK	SCREW M4X10	5	PAVCTH
		XYN4+F8FJ	SCREW(SC-SUSD:4)	4	
	25	XYN5+F16FN	SCREW M5X16	7	PAVCTH
		TMK4TX076	BARRIER	1	PAVCTH
		TMMX174	WASHER	2	PAVCTH

Safety	Ref. No.	Part No.	Part Name & Description	Q'ty	Remarks
		XYN3+F6FJ	SCREW(C:2)	2	PAVCTH