ORDER NO.PAVCTH1107047CE

Service Manual

Plasma Television

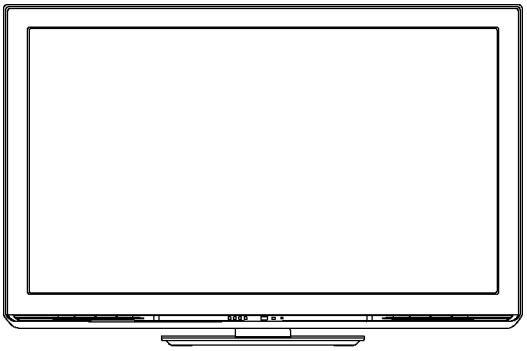

Model No. TH-P50UT30D
TH-P50UT30G
TH-P50UT30M
TH-P50UT30P
TH-P50UT30V

GPF14D-A Chassis

⚠ WARNING

This service information is designed for experienced repair technicians only and is not designed for use by the general public.
It does not contain warnings or cautions to advise non-technical individuals of potential dangers in attempting to service a product.
Products powered by electricity should be serviced or repaired only by experienced professional technicians. Any attempt to service or repair the product or products dealt with in this service information by anyone else could result in serious injury or death.

IMPORTANT SAFETY NOTICE

There are special components used in this equipment which are important for safety. These parts are marked by ⚠ in the Schematic Diagrams, Circuit Board Diagrams, Exploded Views and Replacement Parts List. It is essential that these critical parts should be replaced with manufacturer's specified parts to prevent shock, fire or other hazards. Do not modify the original design without permission of manufacturer.

Panasonic®

© Panasonic Corporation 2011.
Unauthorized copying and distribution is a violation of law.

TABLE OF CONTENTS

PAGE

1 Safety Precautions ---------- 3
1.1. General Guidelines ---------- 3
1.2. Touch-Current Check ---------- 3
2 Warning ---------- 4
2.1. Prevention of Electrostatic Discharge (ESD) to Electrostatically Sensitive (ES) Devices ---------- 4
2.2. About lead free solder (PbF) ---------- 5
3 Service Navigation ---------- 6
3.1. PCB Layout ---------- 6
3.2. Applicable signals ---------- 7
4 Specifications ---------- 8
5 Technical Descriptions ---------- 10
5.1. Specification of KEY for CI Plus, DTCP-IP, WIDEVINE and One-to-One ---------- 10
6 Service Mode ---------- 11
6.1. How to enter into Service Mode ---------- 11
6.2. Option - Mirror ---------- 13
6.3. Service tool mode ---------- 13
6.4. Hotel mode ---------- 14
6.5. Data Copy by SD Card ---------- 15
7 Troubleshooting Guide ---------- 18
7.1. Check of the IIC bus lines ---------- 18
7.2. Power LED Blinking timing chart ---------- 19
7.3. No Power ---------- 19
7.4. No Picture ---------- 20
7.5. Local screen failure ---------- 21
8 Service Fixture & Tools ---------- 22
8.1. SC jig ---------- 22
9 Disassembly and Assembly Instructions ---------- 23
9.1. Remove the Rear cover ---------- 23
9.2. Remove the AC inlet ---------- 23
9.3. Remove the P-Board ---------- 23
9.4. Remove the Side terminal cover ---------- 23
9.5. Remove the Tuner unit ---------- 23
9.6. Remove the A-Board ---------- 24
9.7. Remove the Speakers ---------- 24
9.8. Remove the SU-Board ---------- 24
9.9. Remove the SD-Board ---------- 24
9.10. Remove the SC-Board ---------- 25
9.11. Remove the SS-Board ---------- 25
9.12. Remove the Stand bracket and the Hanger metals ---------- 25
9.13. Remove the Radiator plate ---------- 26
9.14. Remove the C1-Board ---------- 26
9.15. Remove the C2-Board ---------- 26
9.16. Remove the C3-Board ---------- 26
9.17. Remove the Plasma panel section from the Cabinet assy ---------- 26
9.18. Remove the Attachment metal bottom ---------- 27
9.19. Remove the Attachment metal top ---------- 27
9.20. Remove the Glass holders ---------- 27
9.21. Remove the K-Board ---------- 27
9.22. Remove the V-Board ---------- 27
9.23. Replace the Plasma panel ---------- 28
10 Measurements and Adjustments ---------- 29
10.1. Adjustment ---------- 29
11 Block Diagram ---------- 37
11.1. Main Block Diagram ---------- 37

PAGE

11.2. Block (1/4) Diagram ---------- 38
11.3. Block (2/4) Diagram ---------- 39
11.4. Block (3/4) Diagram ---------- 40
11.5. Block (4/4) Diagram ---------- 41
12 Wiring Connection Diagram ---------- 43
12.1. Caution statement ---------- 43
12.2. Wiring (1) ---------- 43
12.3. Wiring (2) ---------- 44
12.4. Wiring (3) ---------- 44
12.5. Wiring (4) ---------- 45
12.6. Wiring (5) ---------- 45
12.7. Wiring (6) ---------- 46
12.8. Wiring (7) ---------- 46
13 Schematic Diagram
14 Printed Circuit Board
15 Exploded View

1 Safety Precautions

1.1. General Guidelines

1. When conducting repairs and servicing, do not attempt to modify the equipment, its parts or its materials.
2. When wiring units (with cables, flexible cables or lead wires) are supplied as repair parts and only one wire or some of the wires have been broken or disconnected, do not attempt to repair or re-wire the units. Replace the entire wiring unit instead.
3. When conducting repairs and servicing, do not twist the Fasten connectors but plug them straight in or unplug them straight out.
4. When servicing, observe the original lead dress. If a short circuit is found, replace all parts which have been overheated or damaged by the short circuit.
5. After servicing, see to it that all the protective devices such as insulation barriers, insulation papers shields are properly installed.
6. After servicing, make the following leakage current checks to prevent the customer from being exposed to shock hazards.

1.2. Touch-Current Check

1. Plug the AC cord directly into the AC outlet. Do not use an isolation transformer for this check.
2. Connect a measuring network for touch currents between each exposed metallic part on the set and a good earth ground such as a water pipe, as shown in Figure 1.
3. Use Leakage Current Tester (Simpson 228 or equivalent) to measure the potential across the measuring network.
4. Check each exposed metallic part, and measure the voltage at each point.
5. Reserve the AC plug in the AC outlet and repeat each of the above measure.
6. The potential at any point (TOUCH CURRENT) expressed as voltage U_1 and U_2, does not exceed the following values:

   For a. c.: U_1 = 35 V (peak) and U_2 = 0.35 V (peak);

   For d. c.: U_1 = 1.0 V,

   Note:

   The limit value of U_2 = 0.35 V (peak) for a. c. and U_1 = 1.0 V for d. c. correspond to the values 0.7 mA (peak) a. c. and 2.0 mA d. c.

   The limit value U_1 = 35 V (peak) for a. c. correspond to the value 70 mA (peak) a. c. for frequencies greater than 100 kHz.
7. In case a measurement is out of the limits specified, there is a possibility of a shock hazard, and the equipment should be repaired and rechecked before it is returned to the customer.

Measuring network for TOUCH CURRENTS

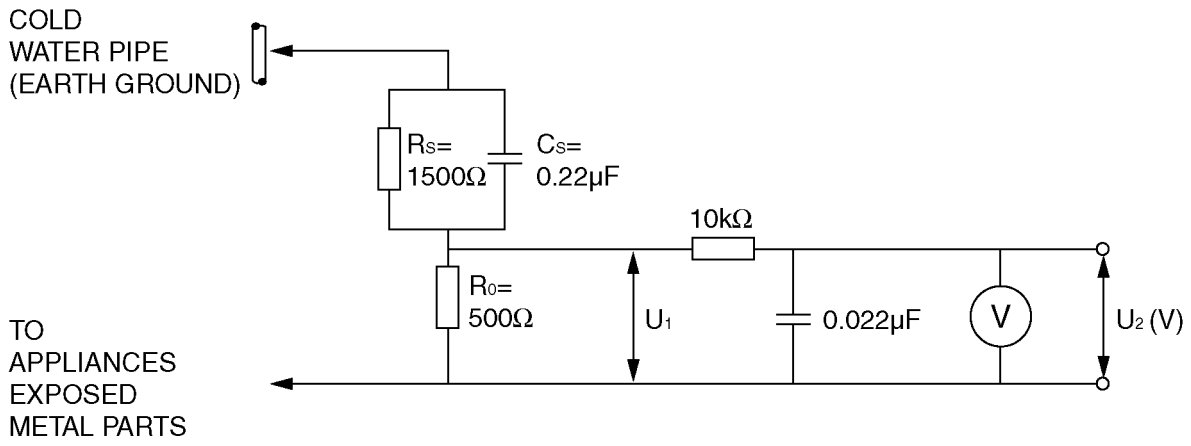

Resistance values in ohms (Ω)

V: Voltmeter or oscilloscope
(r.m.s. or peak reading)

Input resistance: ≥ 1 MΩ
Input capacitance: ≤ 200 pF
Frequency range: 15 Hz to 1 MHz and d.c. respectively

NOTE - Appropriate measures should be taken to obtain the correct value in case of non-sinusoidal waveforms.

Figure 1

2 Warning

2.1. Prevention of Electrostatic Discharge (ESD) to Electrostatically Sensitive (ES) Devices

Some semiconductor (solid state) devices can be damaged easily by static electricity. Such components commonly are called Electrostatically Sensitive (ES) Devices. Examples of typical ES devices are integrated circuits and some field-effect transistors and semiconductor [chip] components. The following techniques should be used to help reduce the incidence of component damage caused by electrostatic discharge (ESD).

1. Immediately before handling any semiconductor component or semiconductor-equipped assembly, drain off any ESD on your body by touching a known earth ground. Alternatively, obtain and wear a commercially available discharging ESD wrist strap, which should be removed for potential shock reasons prior to applying power to the unit under test.
2. After removing an electrical assembly equipped with ES devices, place the assembly on a conductive surface such as aluminum foil, to prevent electrostatic charge buildup or exposure of the assembly.
3. Use only a grounded-tip soldering iron to solder or unsolder ES devices.
4. Use only an anti-static solder removal device. Some solder removal devices not classified as [anti-static (ESD protected)] can generate electrical charge sufficient to damage ES devices.
5. Do not use freon-propelled chemicals. These can generate electrical charges sufficient to damage ES devices.
6. Do not remove a replacement ES device from its protective package until immediately before you are ready to install it. (Most replacement ES devices are packaged with leads electrically shorted together by conductive foam, aluminum foil or comparable conductive material).
7. Immediately before removing the protective material from the leads of a replacement ES device, touch the protective material to the chassis or circuit assembly into which the device will be installed.

   Caution

   Be sure no power is applied to the chassis or circuit, and observe all other safety precautions.
8. Minimize bodily motions when handling unpackaged replacement ES devices. (Otherwise ham less motion such as the brushing together of your clothes fabric or the lifting of your foot from a carpeted floor can generate static electricity (ESD) sufficient to damage an ES device).

2.2. About lead free solder (PbF)

Note: Lead is listed as (Pb) in the periodic table of elements.
In the information below, Pb will refer to Lead solder, and PbF will refer to Lead Free Solder.
The Lead Free Solder used in our manufacturing process and discussed below is (Sn+Ag+Cu).
That is Tin (Sn), Silver (Ag) and Copper (Cu) although other types are available.

This model uses Pb Free solder in it's manufacture due to environmental conservation issues. For service and repair work, we'd suggest the use of Pb free solder as well, although Pb solder may be used.

PCBs manufactured using lead free solder will have the PbF within a leaf Symbol **PbF** stamped on the back of PCB.

Caution

- Pb free solder has a higher melting point than standard solder. Typically the melting point is 50 ~ 70 °F (30~40 °C) higher. Please use a high temperature soldering iron and set it to 700 ± 20 °F (370 ± 10 °C).
- Pb free solder will tend to splash when heated too high (about 1100 °F or 600 °C).
  If you must use Pb solder, please completely remove all of the Pb free solder on the pins or solder area before applying Pb solder. If this is not practical, be sure to heat the Pb free solder until it melts, before applying Pb solder.
- After applying PbF solder to double layered boards, please check the component side for excess solder which may flow onto the opposite side. (see figure below)

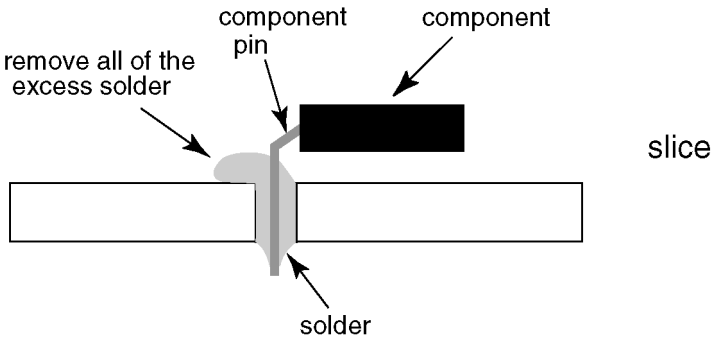

Suggested Pb free solder

There are several kinds of Pb free solder available for purchase. This product uses Sn+Ag+Cu (tin, silver, copper) solder. However, Sn+Cu (tin, copper), Sn+Zn+Bi (tin, zinc, bismuth) solder can also be used.

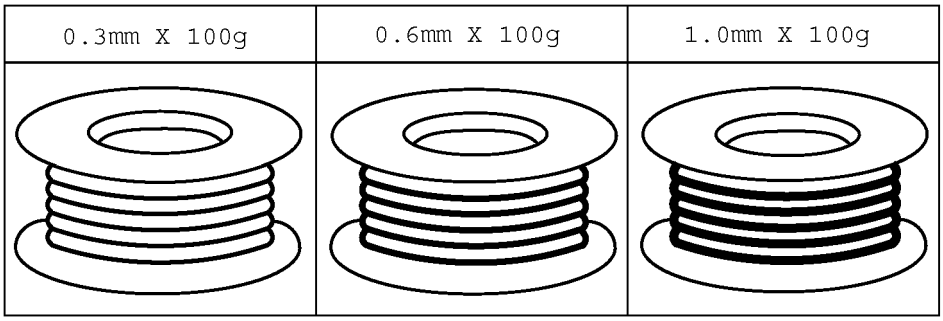

3 Service Navigation

3.1. PCB Layout

Remove the Rear cover

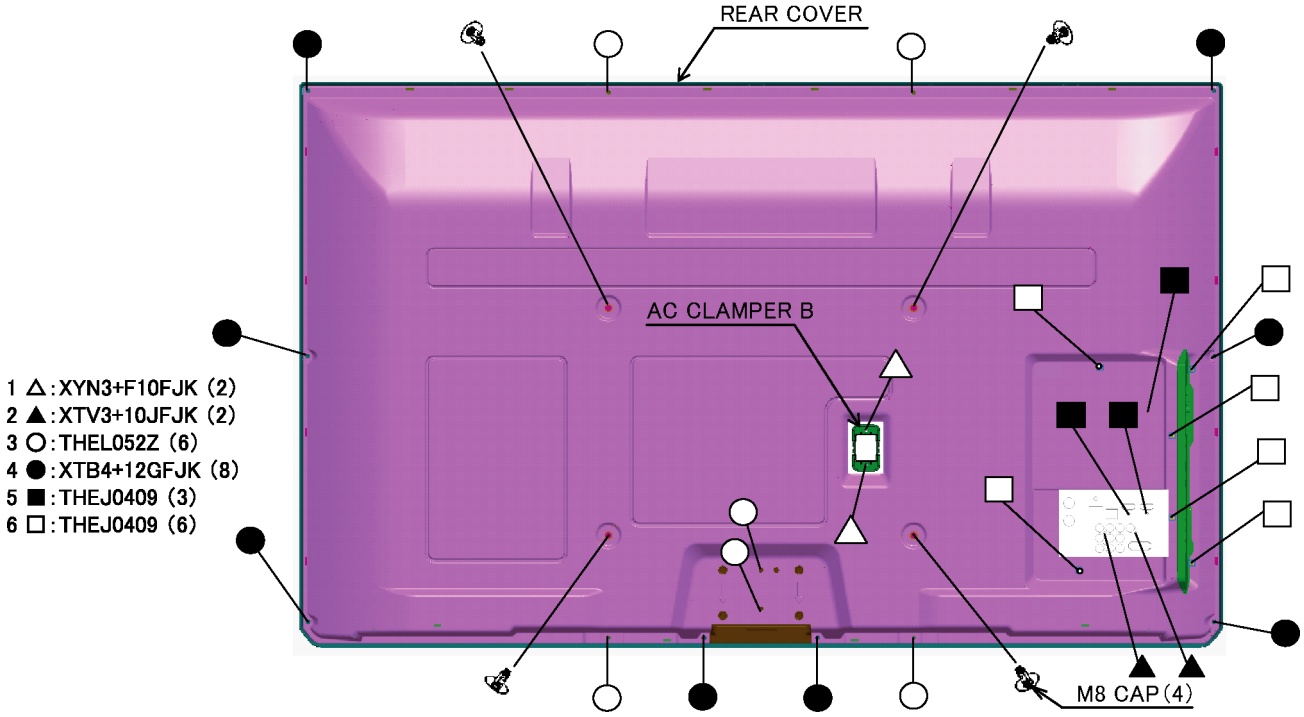

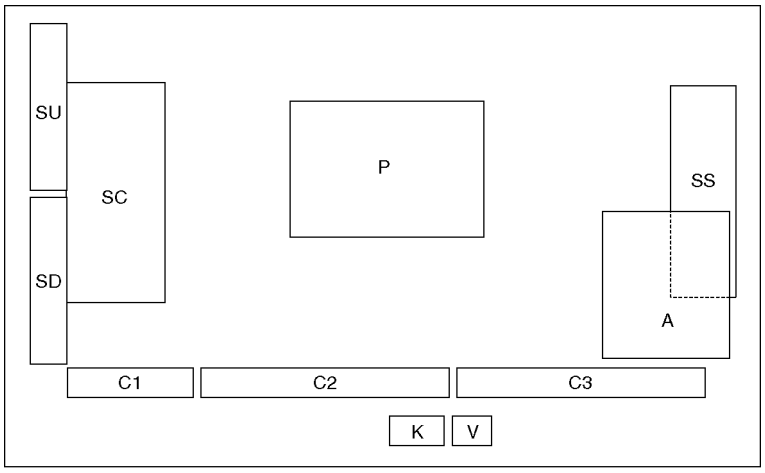

Board Name	Function	Board Name	Function
P	Power Supply Non serviceable. P-Board should be exchange for service.	C1	Data Driver (Lower Right)
		C2	Data Driver (Lower Center)
		C3	Data Driver (Lower Left)
A	Main AV input, processing	SC	Scan Drive
K	Remote receiver, Power LED, C.A.T.S sensor	SS	Sustain Drive
V	3D Eyewear transmitter	SU	Scan out (Upper) Non serviceable. SU-Board should be exchanged for service.
		SD	Scan out (Lower) Non serviceable. SD-Board should be exchanged for service.

3.2. Applicable signals

COMPONENT (Y, P_B/C_B, P_R/C_R), HDMI

* Mark: Applicable input signal

Signal name	COMPONENT	HDMI
525 (480) / 60i	*	*
525 (480) / 60p	*	*
625 (576) / 50i	*	*
625 (576) / 50p	*	*
750 (720) / 60p	*	*
750 (720) / 50p	*	*
1,125 (1,080) / 60i	*	*
1,125 (1,080) / 50i	*	*
1,125 (1,080) / 60p		*
1,125 (1,080) / 50p		*
1,125 (1,080) / 24p		*

PC (from D-sub 15P)

Applicable input signal for PC is basically compatible to VESA standard timing.

Signal name	Horizontal frequency (kHz)	Vertical frequency (Hz)
640 × 400 @70 Hz	31.47	70.07
640 × 480 @60 Hz	31.47	59.94
640 × 480 @75 Hz	37.50	75.00
800 × 600 @60 Hz	37.88	60.32
800 × 600 @75 Hz	46.88	75.00
800 × 600 @85 Hz	53.67	85.06
852 × 480 @60 Hz	31.44	59.89
1,024 × 768 @60 Hz	48.36	60.00
1,024 × 768 @70 Hz	56.48	70.07
1,024 × 768 @75 Hz	60.02	75.03
1,024 × 768 @85 Hz	68.68	85.00
1,280 × 1,024 @60 Hz	63.98	60.02
1,280 × 768 @60 Hz	47.70	60.00
1,366 × 768 @60 Hz	48.39	60.04
Macintosh13" (640 × 480)	35.00	66.67
Macintosh16" (832 × 624)	49.73	74.55
Macintosh21" (1,152 × 870)	68.68	75.06

PC (from HDMI terminal)

Applicable input signal for PC is basically compatible to HDMI standard timing.

Signal name	Horizontal frequency (kHz)	Vertical frequency (Hz)
640 × 480 @60 Hz	31.47	60.00
1,280 × 720 @60 Hz	45.00	60.00
1,920 × 1,080 @60 Hz	67.50	60.00

Note

- Signals other than above may not be displayed properly.
- The above signals are reformatted for optimal viewing on your display.
- PC signal is magnified or compressed for display, so that it may not be possible to show fine detail with sufficient clarity.

4 Specifications

Power Source	AC 220 - 240 V, 50 / 60 Hz (Except P) AC 110 - 240 V, 50 / 60 Hz (P)
Power	
Power Rating	330 W
Standby condition	0.4 W
Display panel	
Aspect Ratio	16:9
Visible screen size	127 cm (diagonal) 1,105 mm (W) × 622 mm (H)
Number of pixels	2,073,600 (1,920 (W) × 1,080 (H)) [5,760 × 1,080 dots]
Sound	
Speaker	(160 mm × 40 mm) × 2, 6 Ω
Audio Output	20 W (10 W + 10 W)
Headphones	M3 (3.5 mm) stereo mini Jack × 1
PC signals	VGA, SVGA, WVGA, XGA SXGA, WXGA ..... (compressed) Horizontal scanning frequency 31 - 69 kHz Vertical scanning frequency 59 - 86 Hz

Receiving Systems / Band name

17 Systems		Function
1	PAL B, G, H	Reception of broadcast transmissions and Playback from Video Cassette Tape Recorders
2	PAL I	
3	PAL D, K	
4	SECAM B, G	
5	SECAM D, K	
6	SECAM K1	
7	NTSC M (NTSC 3.58/4.5 MHz)	

Digital TV (G only) : 7 MHz VHF / 8 MHz UHF free-to-air TV broadcast reception

17 Systems		Function
8	NTSC 4.43/5.5 MHz	Playback from Special VCR's or DVD
9	NTSC 4.43/6.0 MHz	
10	NTSC 4.43/6.5 MHz	
11	NTSC 3.58/5.5 MHz	
12	NTSC 3.58/6.0 MHz	
13	NTSC 3.58/6.5 MHz	
14	SECAM I	
15	PAL 60 Hz/5.5 MHz	Playback from Special Disc Players and Special VCR's or DVD
16	PAL 60 Hz/6.0 MHz	
17	PAL 60 Hz/6.5 MHz	

Receiving Channels

VHF BAND

2-12 (PAL/SECAM B, K1)	0-12 (PAL B AUST.)
1-9 (PAL B N.Z.)	1-12 (PAL/SECAM D)
1-12 (NTSC M Japan)	2-13 (NTSC M USA)

UHF BAND

21-69 (PAL G, H, I/SECAM G, K, K1)

28-69 (PAL B AUST.)	13-57 (PAL D, K)
13-62 (NTSC M Japan)	14-69 (NTSC M USA)

CATV

S1-S20 (OSCAR)	1-125 (USA CATV)
C13-C49 (JAPAN)	S21-S41 (HYPER)
Z1-Z37 (CHINA)	5A, 9A (AUST.)

Aerial - Rear	VHF / UHF	
Operating Conditions		
	Temperature:	0 °C - 40 °C
	Humidity:	20 % - 80 % RH (non-condensing)
Connection Terminals		
AV1 Input		
AUDIO L - R	RCA PIN Type × 2	0.5 V [rms]
COMPONENT	Y	1.0 V [p-p] (including synchronisation)
	P_B/C_B, P_R/C_R	± 0.35 V [p-p]
AV2 Input		
AUDIO L - R	RCA PIN Type × 2	0.5 V [rms]
VIDEO	RCA PIN Type × 1	1.0 V [p-p] (75 Ω)
AV3 Input		
AUDIO L - R	RCA PIN Type × 2	0.5 V [rms]
VIDEO	RCA PIN Type × 1	1.0 V [p-p] (75 Ω)
Audio Output		
AUDIO L - R	RCA PIN Type × 2	0.5 V [rms] (high impedance)
Others		
HDMI1 - 3 Input	TYPE A Connectors	• This TV supports "HDAVI control 5" function.
PC Input	HIGH-DENSITY D-SUB 15PIN	R / G / B: 0.7 V [p-p] (75 Ω) HD / VD: TTL Level 2.0 - 5.0 V [p-p] (high impedance)
DIGITAL AUDIO OUT	PCM / Dolby Digital / DTS, Fiber optic	
Card slot	SD Card slot × 1	
USB 1/2/3	USB 2.0 TYPE A Connectors	DC 5 V, Max. 500 mA
ETHERNET	10BASE-T / 100BASE-TX	

Dimensions (W × H × D)	1,212 mm × 782 mm × 324 mm (With Pedestal) 1,212 mm × 747 mm × 93 mm (TV only)
Mass	34.0 kg Net (With Pedestal) 30.5 kg Net (TV only)

Note

- Design and Specifications are subject to change without notice. Mass and Dimensions shown are approximate.

5 Technical Descriptions

5.1. Specification of KEY for CI Plus, DTCP-IP, WIDEVINE and One-to-One

5.1.1. General information:

1. EEPROM (IC8902) for spare parts has the seed of KEY for each.
2. The final KEY data will be generated by Peaks IC (IC8000) when SELF CHECK was done and are stored in both Peaks IC (IC8000) and EEPROM (IC8902).
   Three KEY are not generated for all models.
   The necessary KEY are only generated and stored depend on the feature of models.

5.1.2. Replacement of ICs:

When Peaks IC (IC8000) is replaced, EEPROM (IC8902) should be also replaced with new one the same time.
When EEPROM (IC8902) is replaced, Peaks IC (IC8000) is not necessary to be replaced the same time.
After the replacement of IC, SELF CHECK should be done to generate the final KEY data.
How to SELF CHECK: While pressing [VOLUME (-)] button on the main unit, press [MENU] button on the remote control for more than 3 seconds.
TV will be forced to the factory shipment setting after this SELF CHECK.

5.1.3. Model and Keys:

Model No.	Keys	
	One-to-one	WIDEVINE
TH-P50UT30D/G/M/P/V	-	○

6 Service Mode

6.1. How to enter into Service Mode

6.1.1. Purpose

After exchange parts, check and adjust the contents of adjustment mode.

While pressing [VOLUME (-)] button of the main unit, press [i] button of the remote control three times within 2 seconds.

Note:

Service Mode can not be entered when 3D signal input.
Input 2D signal to enter Service Mode.

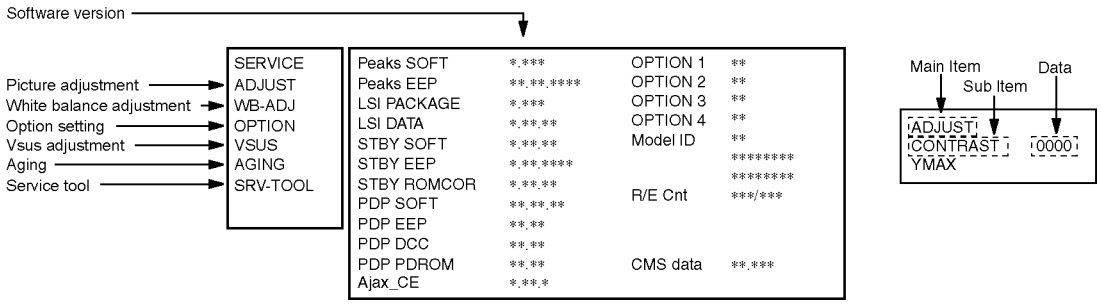

6.1.2. Key command

[1] button...Main items Selection in forward direction
[2] button...Main items Selection in reverse direction
[3] button...Sub items Selection in forward direction
[4] button...Sub items Selection in reverse direction
[RED] button...All Sub items Selection in reverse direction
[GREEN] button...All Sub items Selection in forward direction
[VOL] button...Value of sub items change in forward direction (+), in reverse direction (-)

6.1.3. How to exit

Switch off the power with the [POWER] button on the main unit or the [POWER] button on the remote control.

6.1.4. Contents of adjustment mode

- Value is shown as a hexadecimal number.
- Preset value differs depending on models.
- After entering the adjustment mode, take note of the value in each item before starting adjustment.

Main item	Sub item	Sample Data	Remark
ADJUST	CONTRAST	210	
	COLOR	36	
	TINT	00	
	SUB-BRT	800	
	H-POS	0	
	H-AMP	0	
	V-POS	0	
	V-AMP	0	
WB-ADJ	R-CUT	80	
	G-CUT	80	
	B-CUT	80	
	R-DRV	D4	
	G-DRV	FF	
	B-DRV	96	
	ALL-CUT	80	
	ALL-DRV	FF	
OPTION	Panel-Type	50FHD	Factory Preset
	Boot	ROM	
	STBY-SET	00	
	EMERGENCY	ON	
	Y/C Delay	0	
	OPT 1	10110000	
	OPT 2	11100110	
	OPT 3	00001001	
	OPT 4	00000000	
	EDID-CLK	MID	
	MIRROR	00 (See Option-Mirror)	
	AMR-SELECT	OFF	
VSUS		LOW	See Vsus selection
AGING	ALL WHITE		Built-in test patterns can be displayed.
	ALL BLUE WITH WHITE OUTSIDE FRAME		
	ALL GREEN		
	ALL RED		
	LOW STEP WHITE		
	LOW STEP BLUE		
	LOW STEP GREEN		
	LOW STEP RED		
	WHITE DIAGONAL STRIPE		
	RED DIAGONAL STRIPE		
	GREEN DIAGONAL STRIPE		
	BLUE DIAGONAL STRIPE		
	A-ZONE & B-ZONE		
	1% WINDOW		
	COLOR BAR		
	9 POINTS BRIGHT MEASURE		
	2 DOT OUTSIDE FRAME		
	ALL BLUE		
	DOUBLE FIXED 1% WINDOW		
	VERTICAL LINE SCROLL		
	ON/OFF OR WHITE		
	R/G/B/W ROTATION		
	HALF FIXED ALL WHITE		
	ALL WHITE WITH COUNT DISPLAY		
SRV-TOOL		00	See Service tool mode

6.2. Option - Mirror

Picture can be reversed left and right or up and down.
00 : Default (Normal picture is displayed)
01 : Picture is reversed left and right.
02 : Picture is reversed up and down.

00

01

02

Hint : If the defective symptom (e.g. Vertical bar or Horizontal bar) is moved by selection of this mirror, the possible cause is in A-board.

6.3. Service tool mode

6.3.1. How to access

1. Select [SRV-TOOL] in Service Mode.
2. Press [OK] button on the remote control.

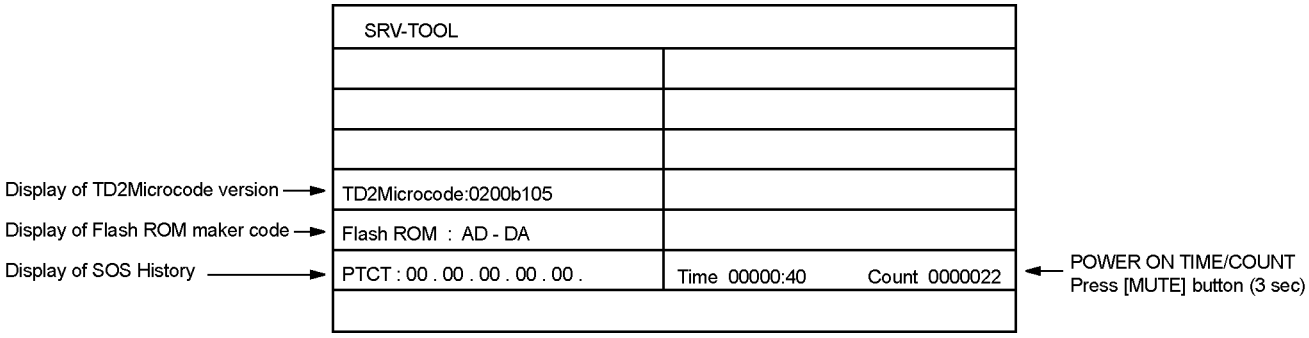

6.3.2. Display of SOS History

SOS History (Number of LED blinking) indication.
From left side; Last SOS, before Last, three occurrence before, 2nd occurrence after shipment, 1st occurrence after shipment.
This indication will be cleared by [Self-check indication and forced to factory shipment setting].

6.3.3. POWER ON Time, COUNT

Note : To display TIME/COUNT menu, highlight position, then press MUTE for 3 sec.
Time : Cumulative power on time, indicated hour : minute by decimal
Count : Number of ON times by decimal
Note : This indication will not be cleared by either of the self-checks or any other command.

6.3.4. Exit

1. Disconnect the AC cord from wall outlet or switch off the power with [Power] button on the main unit.

6.4. Hotel mode

1. Purpose
   Restrict a function for hotels.
2. Access command to the Hotel mode setup menu
   In order to display the Hotel mode setup menu:
   While pressing [VOLUME (-)] button of the main unit, press [AV] button of the remote control three times within 2 seconds.

   Then, the Hotel mode setup menu is displayed.

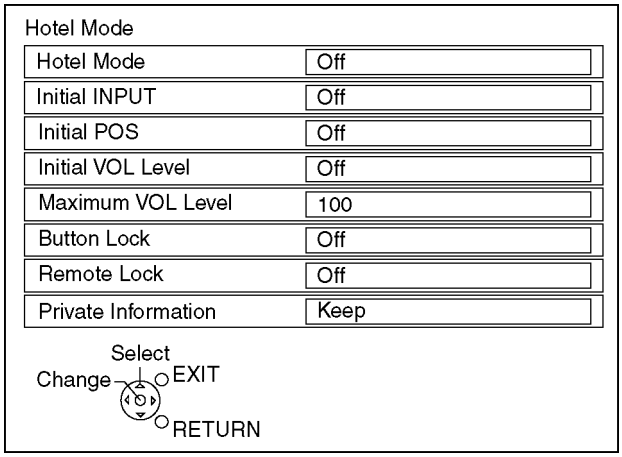

3. To exit the Hotel mode setup menu
   Disconnect AC power cord from wall outlet.
4. Explain the Hotel mode setup menu

Item	Function
Hotel Mode	Select hotel mode On/Off
Initial INPUT	Select input signal modes. Set the input, when each time power is switched on. Selection : Off/TV/AV1/AV2/AV3/PC/HDMI1/HDMI2/HDMI3 • Off: give priority to a last memory.
Initial POS	Select programme number. Selection : Off/0 to 99 • Off: give priority to a last memory
Initial VOL Level	Adjust the volume when each time power is switched on. Selection/Range : Off/0 to 100 • Off: give priority to a last memory
Maximum VOL Level	Adjust maximum volume. Range : 0 to 100
Button Lock	Select local key conditions. Selection : Off/SETUP/MENU/ALL • Off: altogether valid • SETUP: only F-key is invalid (Tuning guide (menu) can not be selected.) • MENU: only F-key is invalid (only Volume/Mute can be selected.) • ALL: altogether invalid.
Remote Lock	Select remote control key conditions. Selection : Off/SETUP/MENU • Off: altogether valid • SETUP: only Setup menu is invalid • MENU: Picture/Sound/Setup menu are invalid
Private Information	Select private information for VIERA Cast is Keep or Reset if Hotel mode is set to [On] when TV power on. Selection : Keep/Reset • Keep: private information for VIERA Cast is keep • Reset: private information for VIERA Cast is reset

6.5. Data Copy by SD Card

6.5.1. Purpose

(a) Board replacement (Copy the data when exchanging A-board):

When exchanging A-board, the data in original A-board can be copied to SD card and then copy to new A-board.

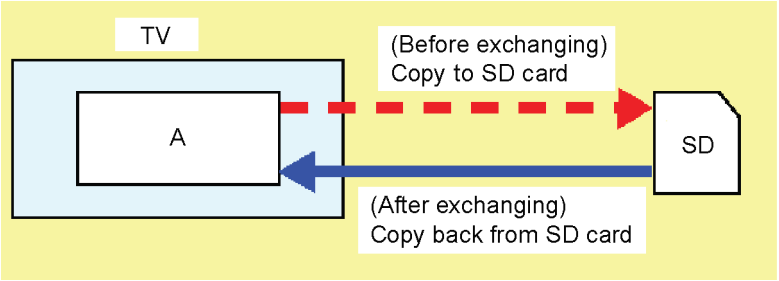

Following data can be copied.
User setting data
(incl. Hotel mode setting data)
Channel scan data
Adjustment and factory preset data

(b) Hotel (Copy the data when installing a number of units in hotel or any facility):

When installing a number of units in hotel or any facility, the data in master TV can be copied to SD card and then copy to other TVs.

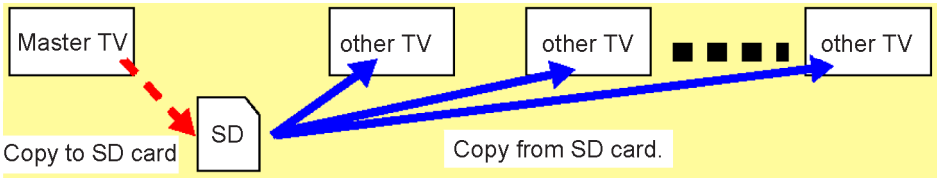

Following data can be copied.
User setting data
(incl. Hotel mode setting data)
Channel scan data

6.5.2. Preparation

Make pwd file as startup file for (a) or (b) in a empty SD card.

1. Insert a empty SD card to your PC.
2. Right-click a blank area in a SD card window, point to New, and then click text document. A new file is created by default (New Text Document.txt).
3. Right-click the new text document that you just created and select rename, and then change the name and extension of the file to the following file name for (a) or (b) and press ENTER.

File name:

(a) For Board replacement : boardreplace.pwd
(b) For Hotel : hotel.pwd

Note:

Please make only one file to prevent the operation error.

No any other file should not be in SD card.

6.5.3. Data copy from TV set to SD Card

1. Turn on the TV set.
2. Insert SD card with a startup file (pwd file) to SD slot.
   On-screen Display will be appeared according to the startup file automatically.
3. Input a following password for (a) or (b) by using remote control.
   (a) For Board replacement : 2770
   (b) For Hotel : 4850
   Data will be copied from TV set to SD card.
   It takes around 2 to 6 minutes maximum for copying.
4. After the completion of copying to SD card, remove SD card from TV set.
5. Turn off the TV set.

Note:

Following new folder will be created in SD card for data from TV set.
(a) For Board replacement : user_setup
(b) For Hotel : hotel

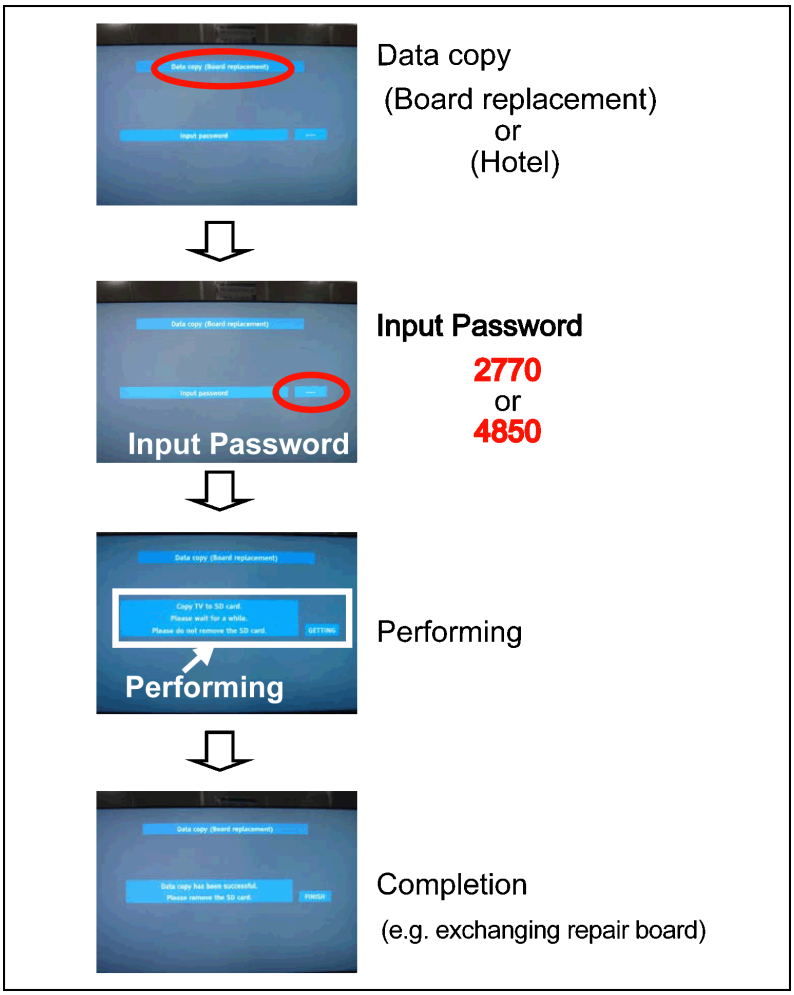

6.5.4. Data copy from SD Card to TV set

1. Turn on the TV set.
2. Insert SD card with Data to SD slot.
   On-screen Display will be appeared according to the Data folder automatically.
3. Input a following password for (a) or (b) by using remote control.
   (a) For Board replacement : 2771
   (b) For Hotel : 4851
   Data will be copied from SD card to TV set.
4. After the completion of copying to SD card, remove SD card from TV set.
   (a) For Board replacement : Data will be deleted after copying (Limited one copy).
   (b) For Hotel : Data will not be deleted and can be used for other TVs.
5. Turn off the TV set.

Note:

1. Depending on the failure of boards, function of Data copy for board replacement does not work.
2. This function can be effective among the same model numbers.

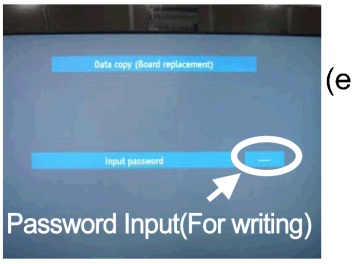

(e.g. For exchanging repair board)

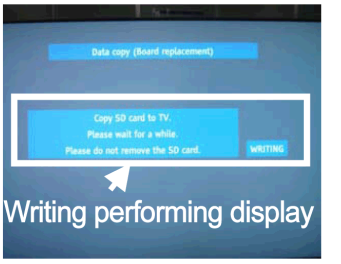

Performing

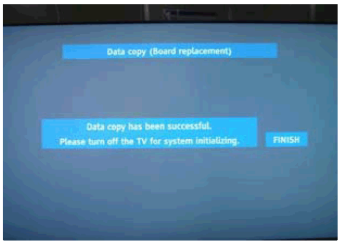

Completion

7 Troubleshooting Guide

Use the self-check function to test the unit.

1. Checking the IIC bus lines
2. Power LED Blinking timing

7.1. Check of the IIC bus lines

7.1.1. How to access

7.1.1.1. Self-check indication only:

Produce TV reception screen, and while pressing [VOLUME (-)] button on the main unit, press [OK] button on the remote control for more than 3 seconds.

7.1.1.2. Self-check indication and forced to factory shipment setting:

Produce TV reception screen, and while pressing [VOLUME (-)] button on the main unit, press [MENU] button on the remote control for more than 3 seconds.

7.1.2. Screen display

```
50FHD                    Panasonic  2011PDP
SET
                         SELF CHECK COMPLETE
                          SYS SELECT : Asia/M.East

TUN        OK     PEAKS-SOFT          *.***     SUM              ****
STBY       OK     PEAKS-EEP        **.**.****
MEM1       OK     LSI-PACKAGE         *.***     MODEL ID           **
MEM2       OK     LSI-RELEASE          *.**                    ********
AVSW       OK     STBY-SOFT          *.**.**                   ********
TEMP       OK     STBY-EEP        *.**.****
LAN        OK     STBY-ROMCORR       *.**.**
ID2        OK     PDP-MCU           **.**.**
LP1        OK     PDP-EEP              **.**
IRDRV      OK     PDP-DCC              **.**
                  PDP-PDROM            **.**
```

7.1.3. Check Point

Confirm the following parts if NG was displayed.

DISPLAY	Check Ref. No.	Description	Check P.C.B.
TUN	TU4801	TUNER	A-Board
STBY	IC8000	PEAKS-LDA3 (STM)	A-Board
MEM1	IC8902	PEAKS EEPROM	A-Board
MEM2	IC8901	STM EEPROM	A-Board
AVSW	IC3001	AUDIO/VIDEO SW	A-Board
TEMP	IC3753	TEMP SENSOR	A-Board
LAN	IC8601	ETHER PHY	A-Board
ID2			A-Board
LP1	IC9300	LP1	A-Board
IRDRV	IC5901	LED DRIVE	A-Board

7.1.4. Exit

Disconnect the AC cord from wall outlet or switch off the power with [Power] button on the main unit.

7.2. Power LED Blinking timing chart

1. Subject
   Information of LED Flashing timing chart.
2. Contents
   When an abnormality has occurred the unit, the protection circuit operates and reset to the stand by mode. At this time, the defective block can be identified by the number of blinks of the Power LED on the front panel of the unit.

Blinking Times	Contents	Check point
1	Panel information SOS PD5 Start SOS	-
3	P+ 3.3V SOS	A-Board
4	Power SOS	P-Board
5	P+ 5V SOS	A-Board
6	Driver SOS1 (SC Energy recovery circuit) (A-SC FPC DET)	SC-Board A-SC FPC
7	Driver SOS2 (SU/SD Connector DET) (SU/SD Scan and Logic IC)	SU-Board SD-Board *
8	Driver SOS3 (SS FPC DET) (SS Energy recovery circuit)	SS-Board SS FPC
9	Discharge Control SOS	A-Board
10	Sub 5V SOS Sub 3.3V SOS Tuner power SOS	A-Board SC-Board SS-Board P-Board
12	Sound SOS	A-Board Speaker
13	Emergency SOS	A-Board
14	IROM SOS (ROM in Peaks IC)	A-Board P-Board

*Use SC jig to isolate the board.

7.3. No Power

First check point

There are following 3 states of No Power indication by power LED.

1. No lit.
2. Green is lit then turns red blinking a few seconds later. (See 7.2.)
3. Only red is lit.

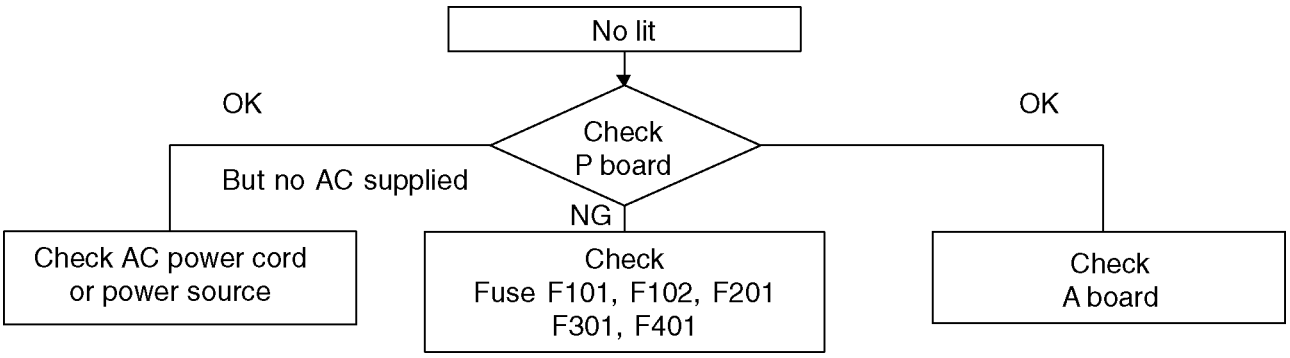

7.4. No Picture

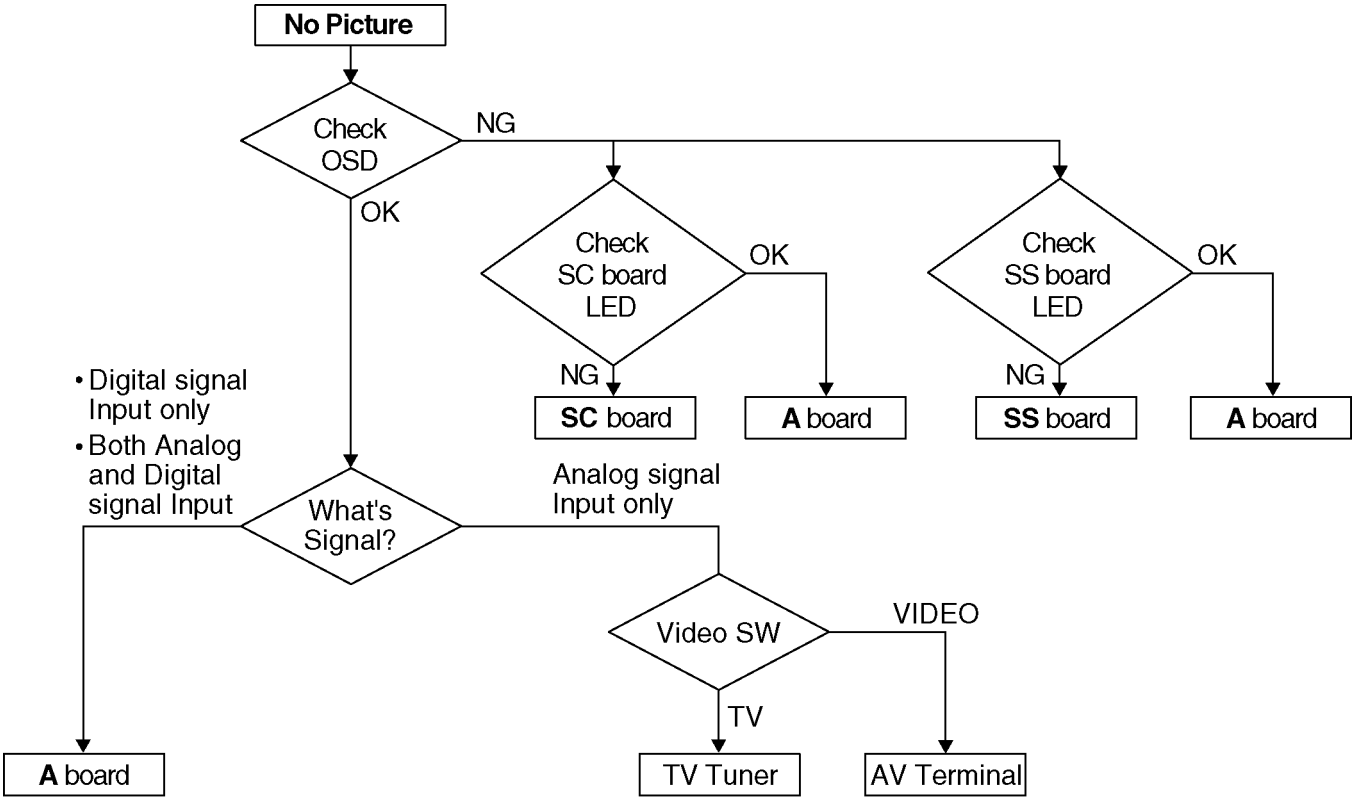

Drive circuits LED indicator

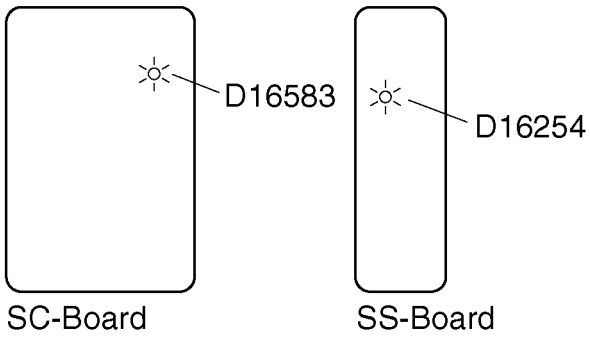

7.5. Local screen failure

Plasma display may have local area failure on the screen. Fig-1 is the possible defect P.C.B. for each local area.

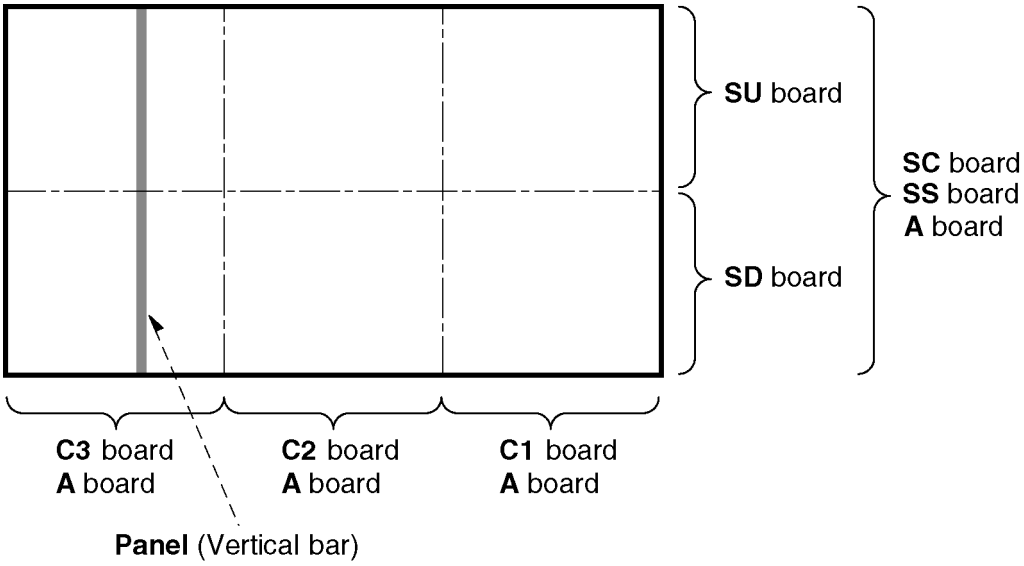

<Local screen failure chart>

Fig-1

8 Service Fixture & Tools

8.1. SC jig

Purpose:
To find the failure board (SC or SU/SD) when the power LED is blinking 7 times.
SC jig:
Jumper connector to connect to SC50 connector on SC board
Part number:
TZSC09187
How to use:
Caution: Remove SC jig from SC board after inspection.

1. Remove all connector between SC board and SU/SD board to isolate SC board from both SU and SD board electrically.
   Note: The board will be damaged if all connector is not removed (for example; remove connector only for SU board and stay connecting with SD board. The board will be damaged.)
2. Connect SC jig to connector SC50 at left bottom side of SC board
3. Turn on the TV/Display Unit and confirm the power LED blinking.
   LED blinking: Possible cause of failure is in SC board
   No LED blinking (Lighting or no lighting): Possible cause of failure is in SU or SD board
4. After inspection, turn off the TV/Display Unit and wait a few minutes to discharge.
5. Remove SC jig from SC board.

Remark: This SC jig can be used for all 2011 Plasma TV and Plasma Display.

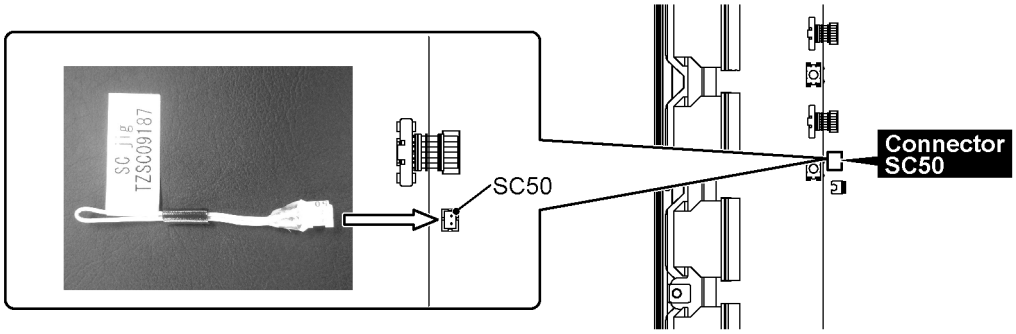

9 Disassembly and Assembly Instructions

9.1. Remove the Rear cover

1. See PCB Layout (Section 3)

9.2. Remove the AC inlet

Caution:

To remove P.C.B. wait 1 minute after power was off for discharge from electrolysis capacitors.

1. Disconnect the connector (P9).
2. Remove the screw (×1 ➡) and remove the AC inlet.

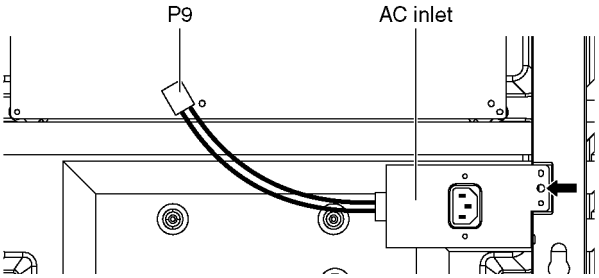

9.3. Remove the P-Board

Caution:

To remove P.C.B. wait 1 minute after power was off for discharge from electrolysis capacitors.

1. Disconnect the connectors (P2, P6, P9, P11, P34 and P35).
2. Remove the screws (×7 ➡) and remove the P-Board.

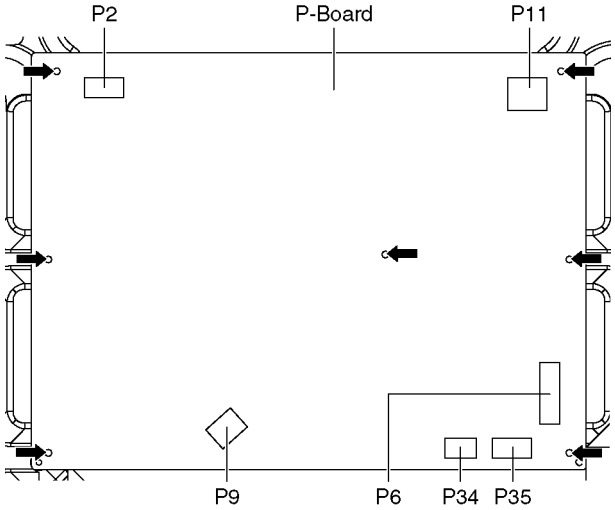

9.4. Remove the Side terminal cover

1. Remove the screws (×2 ➡).
2. Remove the Side terminal cover.

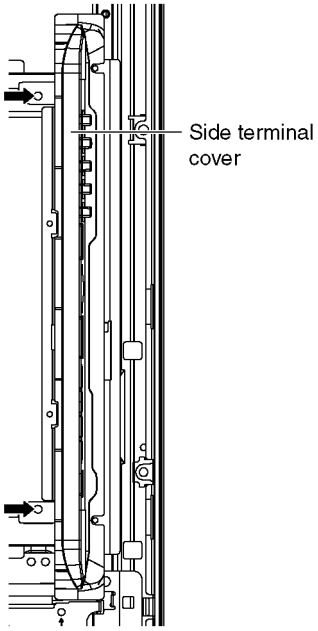

9.5. Remove the Tuner unit

1. Remove the Side terminal cover. (See section 9.4.)
2. Unlock the cable clampers to free the cable.
3. Disconnect the connectors (A1, A6, A11, A14 and A35).
4. Disconnect the flexible cables (A20, A31 and A32).
5. Remove the screws (×3 ➡) and remove the Tuner unit.

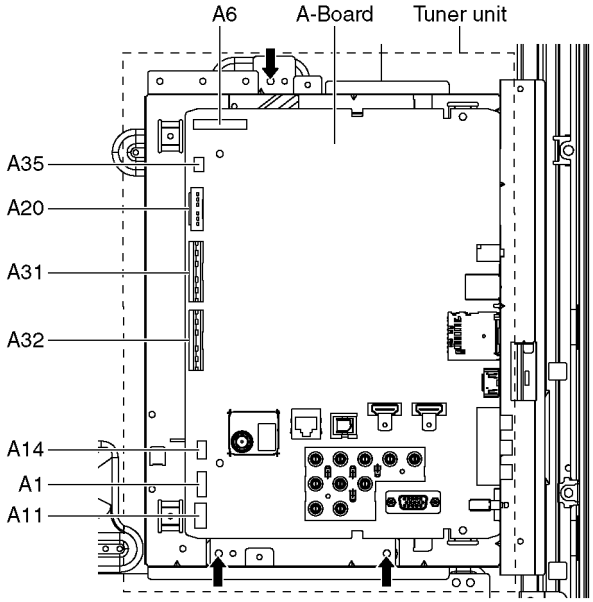

9.6. Remove the A-Board

1. Remove the Tuner unit. (See section 9.5.)
2. Remove the screws (×2 ➡, ×1 ⇨) and remove the A-Board.

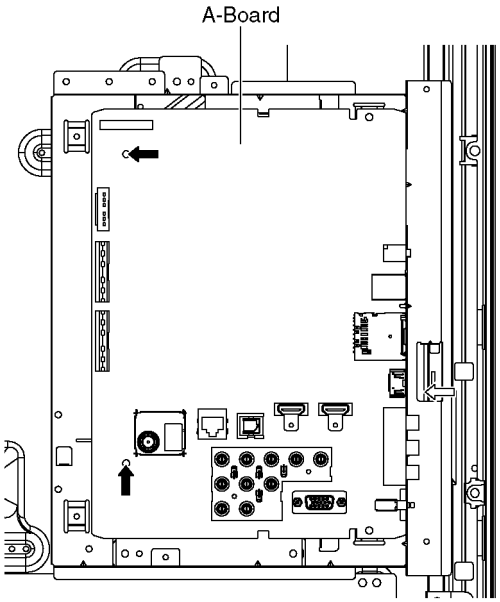

9.7. Remove the Speakers

1. Unlock the cable clampers to free the cable.
2. Disconnect the Speaker terminal.
3. Remove the screws (×2 ➡ each) and remove the Speakers (L, R).

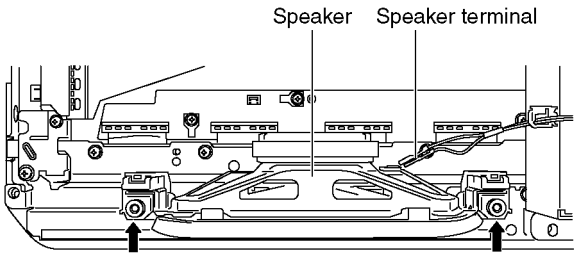

9.8. Remove the SU-Board

1. Disconnect the flexible cables (SU1, SU2, SU3, SU4 and SU5) connected to the SU-Board.
2. Disconnect the flexible cable (SU11-SD11) and the bridge connector (SC41-SU41).
3. Remove the screws (×2 ➡, ×2 ⇨) and remove the SU-Board.

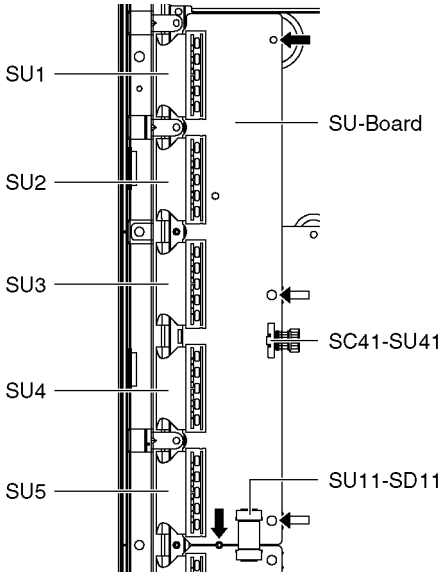

9.9. Remove the SD-Board

1. Disconnect the flexible cables (SD1, SD2, SD3, SD4 and SD5) connected to the SD-Board.
2. Disconnect the flexible cable (SU11-SD11) and the bridge connectors (SC42-SD42 and SC46-SD46).
3. Remove the screws (×2 ➡, ×2 ⇨) and remove the SD-Board.

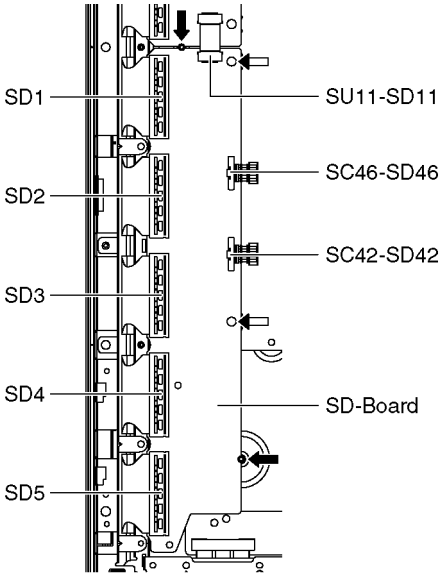

9.10. Remove the SC-Board

1. Remove the SU-Board and SD-Board. (See section 9.8. and 9.9.)
2. Disconnect the connector (SC2).
3. Disconnect the flexible cable (SC20).
4. Remove the screws (×7 ➡) and remove the SC-Board.

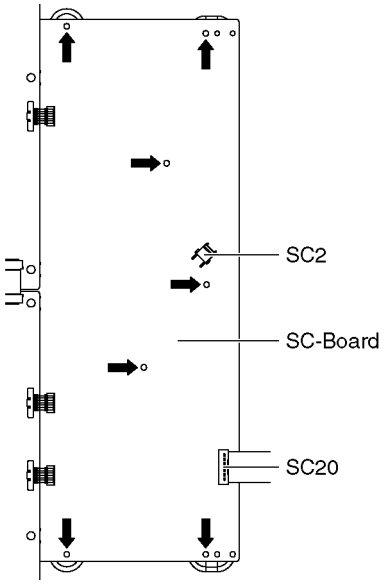

9.11. Remove the SS-Board

1. Remove the Tuner unit. (See section 9.5.)
2. Disconnect the connector (SS11).
3. Disconnect the flexible cable (SS33).
4. Disconnect the flexible cables (SS53, SS54 and SS56).
5. Remove the screws (×5 ➡) and remove the SS-Board.

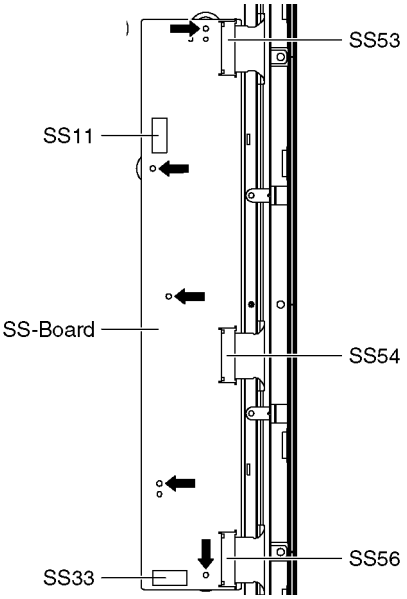

9.12. Remove the Stand bracket and the Hanger metals

1. Remove the Plasma panel section from the servicing stand and lay on a flat surface such as a table (covered by a soft cloth) with the Plasma panel surface facing downward.
2. Unlock the cable clampers to free the cable.
3. Remove the AC inlet. (See section 9.2.)
4. Remove the Stand bracket fastening screws (×5 ➡) and remove the Stand bracket.

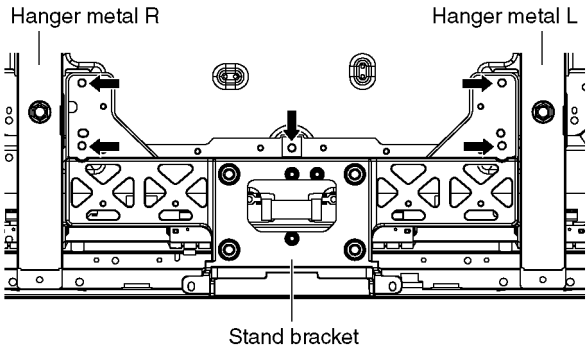

5. Remove the Hanger metals (L, R) fastening screws (×2 ➡ each) and remove the Hanger metals (L, R).

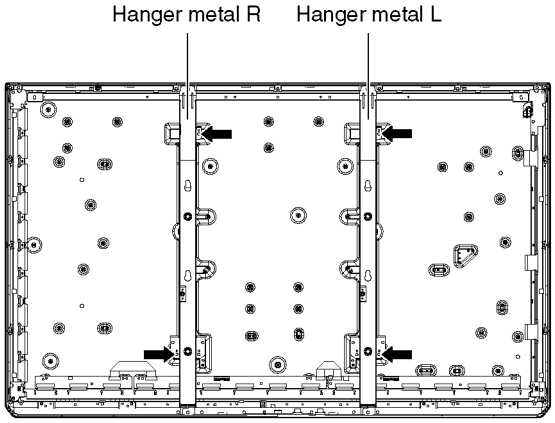

9.13. Remove the Radiator plate

1. Remove the Stand bracket and the Hanger metals. (See section 9.12.)
2. Remove the screws (×15 ➡) and remove the Radiator plate.

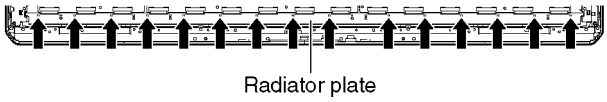

9.14. Remove the C1-Board

1. Disconnect the flexible cables (CB1, CB2 and CB3).
2. Disconnect the flexible cable (C10).
3. Remove the screws (×3 ➡) and remove the C1-Board.

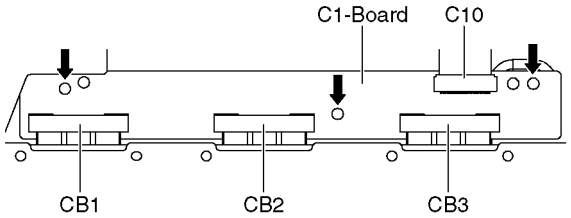

9.15. Remove the C2-Board

1. Remove the Stand bracket and the Hanger metal R. (See section 9.12.)
2. Disconnect the flexible cables (CB4, CB5, CB6, CB7, CB8 and CB9).
3. Disconnect the flexible cables (C20, C21 and C26).
4. Remove the screws (×4 ➡) and remove the C2-Board.

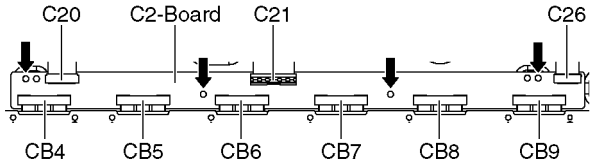

9.16. Remove the C3-Board

1. Remove the Stand bracket and the Hanger metal L. (See section 9.12.)
2. Disconnect the flexible cables (CB10, CB11, CB12, CB13, CB14 and CB15).
3. Disconnect the flexible cables (C31, C33 and C36).
4. Disconnect the connector (C35).
5. Remove the screws (×4 ➡) and remove the C3-Board.

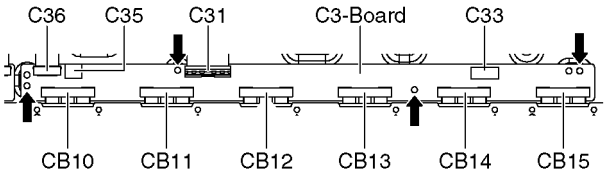

9.17. Remove the Plasma panel section from the Cabinet assy

1. Remove the Plasma panel fastening screws (×4 ➡) and remove the Cabinet assy.

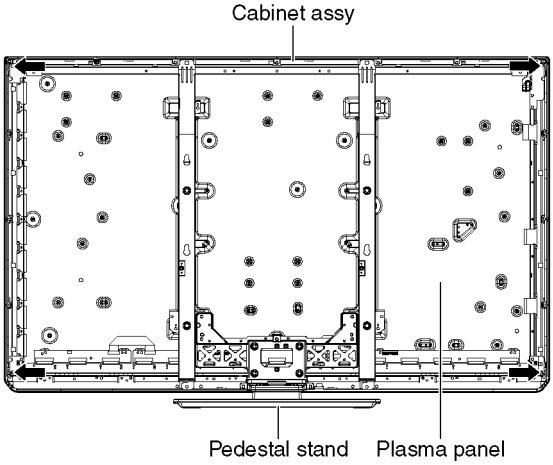

2. For leaving the Cabinet assy from the Plasma panel, pull the bottom of the Cabinet assy forward, lift, and remove.

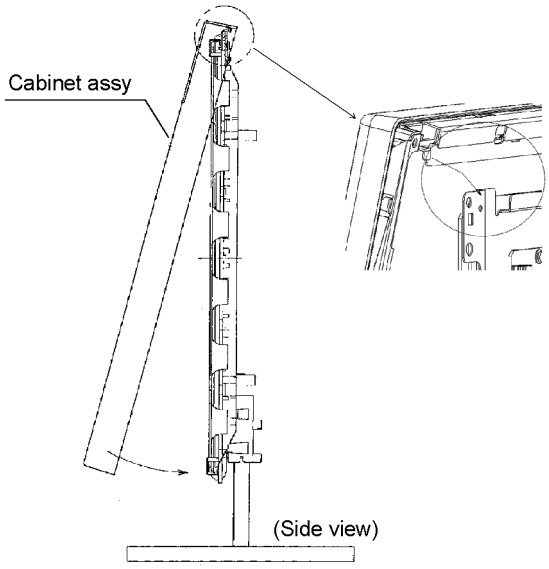

9.18. Remove the Attachment metal bottom

1. Remove the Radiator plate. (See section 9.13.)
2. Remove the screws (×1 ➡ each) and remove the Attachment metal bottom (L, R).

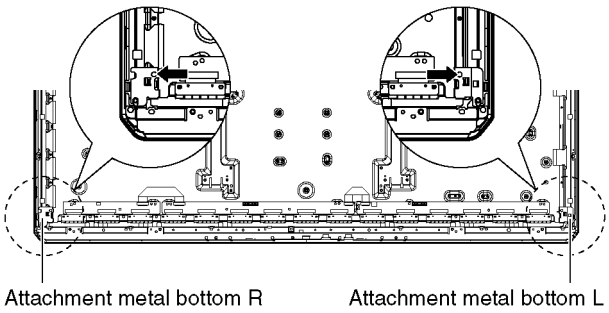

9.19. Remove the Attachment metal top

1. Remove the Cabinet assy. (See section 9.17.)
2. Remove the screws (×2 ➡, ×2 ⇨) and remove the Attachment metal top (L, R).

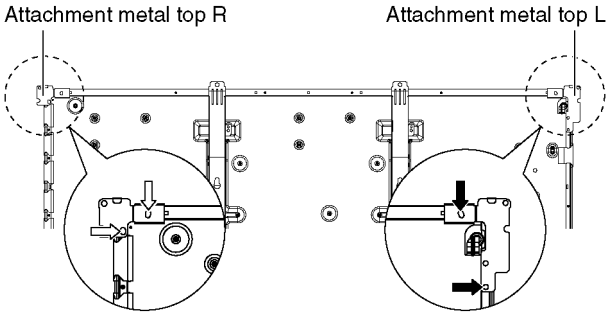

9.20. Remove the Glass holders

1. Remove the Cabinet assy. (See section 9.17.)
2. Remove the screws (×7 ⇨).
3. Remove the Glass holder top.
4. Remove the screws (×7 ➡).
5. Remove the Glass holder bottom.
6. Remove the screws (×4 ➡).
7. Remove the Glass holder side (L, R).

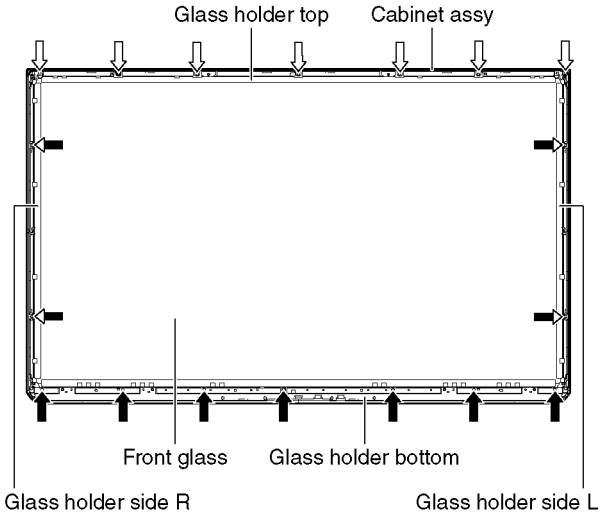

9.21. Remove the K-Board

1. Remove the Glass holder bottom. (See section 9.20.)
2. Remove the claw (×1 ⇨).
3. Disconnect the connector (K1) and Remove the K-Board from LED Panel.

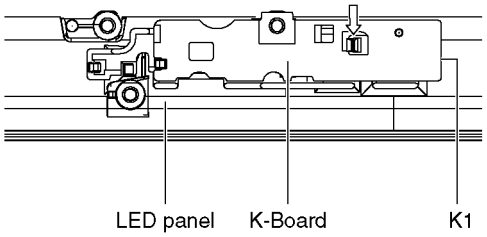

9.22. Remove the V-Board

1. Remove the Glass holder bottom. (See section 9.20.)
2. Remove the screw (×1 ➡) and remove the claws (×3 ⇨).
3. Disconnect the connector (V14) and remove the V-Board from the 3D emitter panel.

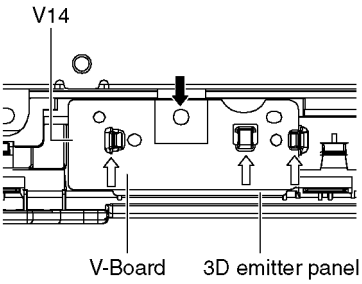

9.23. Replace the Plasma panel

Caution:

A new Plasma panel itself without Hanger metals is fragile.

To avoid the damage to new Plasma panel, carry a new Plasma panel taking hold of the Hanger metals after assembling the Hanger metals and the Stand bracket.

1. Place a carton box packed a new Plasma panel on the flat surface of the work bench.
2. Open a box and without taking a new Plasma panel; Attach the C1-Board, C2-Board and the C3-Board, connect the flexible cables from the Plasma panel to the C1-Board, C2-Board and the C3-Board, and fit the Flexible cable holders.
3. Attach the Hanger metals and the Stand bracket to the new Plasma panel.
4. Place the Plasma panel on the servicing stand taking hold of the Hanger metals.
5. Attach the Cabinet assy and each P.C.Board and so on, to the new Plasma panel.

***When fitting the Cabinet assy, be careful not to allow any debris, dust or handling residue to remain between the Front glass and Plasma panel.**

10 Measurements and Adjustments

10.1. Adjustment

10.1.1. Vsus selection

Caution:

When Plasma panel or A-board is replaced, Vsus should be set to LOW.

Procedure

1. Go into main item [VSUS] in Service Mode. LOW will be displayed.
2. Press [OK] button to go to TEST stage.
   White pattern without On-Screen Display will be displayed during TEST and CONF stage. Press [5] button to display the On-Screen Display.
3. In LOW setting
   If no several dead pixel is visible remarkably in white pattern, press [3] button to go to CONF stage.
4. Press [OK] button in CONF stage to store LOW.
5. Exit Service Mode by pressing [Power] button.

Vsus selection in Service mode

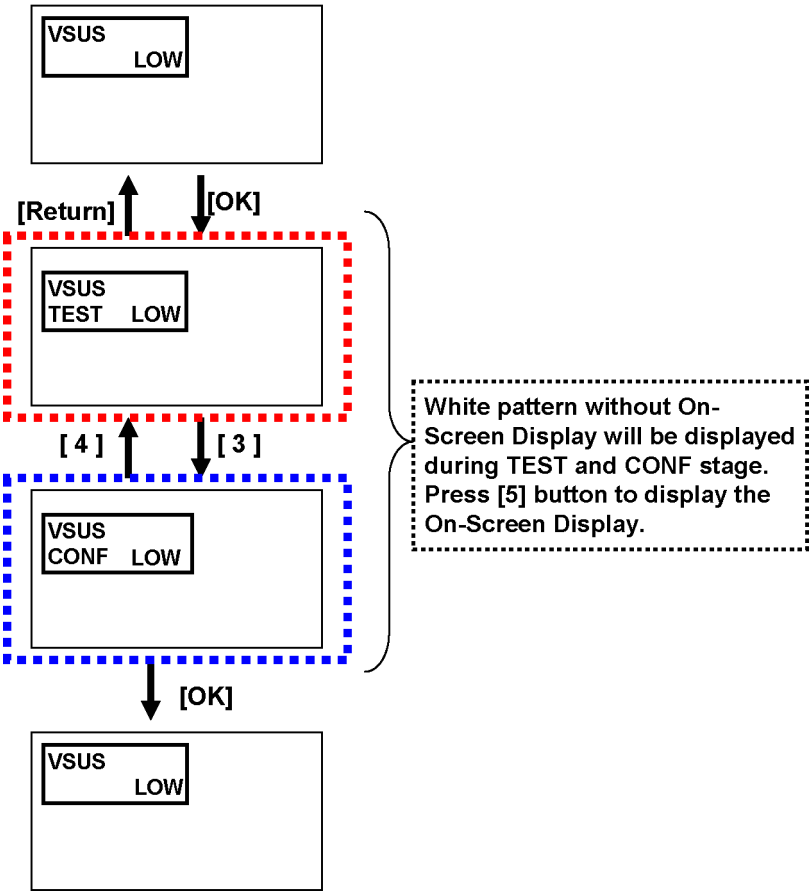

10.1.2. Sub-Contrast adjustment

Name of measuring instrument	Connection	Remarks
RF generator Base Band signal generator HD signal generator		

Steps	Remarks
Connect IIC cable (bus controller-cable) after banner OSD appear. And after SRQ-L, begin an adjustment 2 seconds later. Adjustment of TV (RF system) **Note:** In adjustment, you must setting to modulation of signal at 87.5%. 1. Receive a RF PAL 100% Full White or Split Colour bar shown as below. 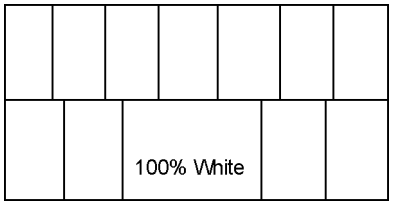 2. Goes into service mode. 3. Push a [1] or [2] key, and goes into adjustment mode for [CONTRAST]. Adjustment 1. The colour key yellow button of remote control is pushed. 2. The OSD character of sub-contrast becomes red. (Inside under automatic adjustment) 3. The OSD character of sub-contrast returns to black. When [NG] is displayed, adjustment failure. 4. End.	**Note:** **Sub-contrast adjustment is unadjusted for AV/ HD input.** **But, when needing the adjustment chosen manually, please refer to [alternative method].**

Steps	Remarks
<u>Another procedure</u> Connect IIC cable (bus controller-cable) after banner OSD appear. And after SRQ-L, begin an adjustment 2 seconds later. Adjustment of AV system 1. PAL 100% Full White or Split Colour bar receive AV1(or AV2), shown as below. 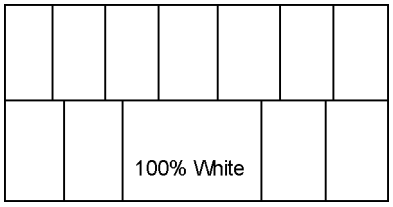 2. Goes into service mode. 3. Push [1] or [2] key, and goes into adjustment mode for [CONTRAST]. Adjustment 1. The colour key yellow button of remote control is pushed. 2. The OSD character of sub-contrast becomes red. (Inside under automatic adjustment) 3. The OSD character of sub-contrast returns to black. When [NG] is displayed, adjustment failure. 4. End.	

Steps	Remarks
<u>Another procedure</u> Connect IIC cable (bus controller-cable) after banner OSD appear. And after SRQ-L, begin an adjustment 2 seconds later. Adjustment of HD system 1. At 1080i 100% Full White or Split colour bar receive component signal, as shown below. 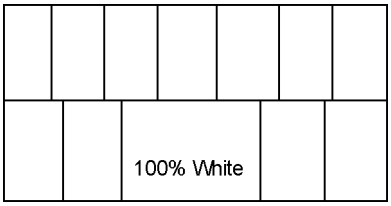 2. Goes into service mode. 3. Push [1] or [2] key, and goes into adjustment mode for [CONTRAST]. Adjustment 1. The colour key yellow button of remote control is pushed. 2. The OSD character of sub-contrast becomes red. (Inside under automatic adjustment) 3. The OSD character of sub-contrast returns to black. When [NG] is displayed, adjustment failure. 4. End.	

Table1, Sub-contrast Adustment initial data in Peaks EEPROM

06E0	Y Gain Standard for NTSC-G:RF (L)	Setting data
06E1	Y Gain Standard for NTSC-G:RF (H)	
06E2	Y Gain Standard for PAL-G:RF (L)	
06E3	Y Gain Standard for PAL-G:RF (H)	
06E4	Y Gain Standard for NTSC-G:ELSE (L)	
06E5	Y Gain Standard for NTSC-G:ELSE (H)	
06E6	Y Gain Standard for PAL-G:ELSE (L)	
06E7	Y Gain Standard for PAL-G:ELSE (H)	
06E8	Y Gain Standard for YUV (L)	
06E9	Y Gain Standard for YUV (H)	

10.1.3. White balance adjustment

The adjusting method is different according to the PEAKS EEPROM version.

[copy adjustment] : Peaks EEPROM ver.1.00-

[Differential and copy adjustment] : Peaks EEPROM ver.1.-**

Name of measuring instrument	Connection	Remarks
W/ B pattern Color analyzer (Minolta CA-100 or equivalent)	Panel surface	

Steps	Remarks
[copy adjustment] **Connect IIC cable (bus controller-cable) after banner OSD appear.** **And after SRQ-L, begin an adjustment 2 seconds later.** • Make sure the front panel to be used on the final set is fitted. • Make sure a color signal is not being shown before adjustment. • Put the color analyzer where there is little colour variation. **Note:** Copy Adjustment method in service mode. When you push [OK] key in each item, Adjustment data is copied between HD data and SD data.	Picture menu : Dynamic ASPECT : 16:9 Condition is same at alternative method too.
1. Enter the service mode. Please receive the Analog-RF. Or, please select CVBS/YUV/HDMI. (No inputting is possible.). (Forbid Analog-RF with no signal.) 2. A number key [1] or [2] are operated and [WB-ADJ] is displayed. Check that the color temp is [COOL]. 3. A number key [0] is operated and select [METHOD 01]. 4. A number key [5] is operated and [INNER PATTERN] is displayed. INNER PATTERN 5. Select [G-CUTOFF] item, using the number-key [3] or [4], and set to [80], using the volume-key [+] or [-]. Also, [B-CUTOFF] and [R-CUTOFF] set to [80]. 6. Set [G-DRIVE] at [D0]. 7. Touch the signal receiver of color analyzer to the INNER PATTERN's center, and adjust B drive and R drive so x, y become the [COLOR TEMP COOL] in the below table1. 8. All RGB drive increase so that the maximum drive value of RGB may become [FF]. ([ALL-DRIVE] set to [FF].) 9. Set color temp to [NORMAL] using [7] key. 10. Fix G-CUTOFF, B-CUTOFF and R-CUTOFF at [80]. 11. Set [G-DRIVE] at [D0]. 12. Adjust B-DRIVE and R-DRIVE so the INNER PATTERN's x, y become the [COLOR TEMP NORMAL] in the below table1. 13. All RGB drive increase so that the maximum drive value of RGB may become [FF]. ([ALL-DRIVE] set to [FF].) 14. Set color temp to [WARM] using [7] key. 15. Fix G-CUTOFF, B-CUTOFF and R-CUTOFF at [80]. 16. Set [G-DRIVE] at [D0]. 17. Adjust B-DRIVE and R-DRIVE so the INNER PATTERN's x, y become the [COLOR TEMP WARM] in the below table1. 18. All RGB drive increase so that the maximum drive value of RGB may become [FF]. ([ALL-DRIVE] set to [FF].) 19. Confirm [METHOD=01]. Please refer table2-3 to address. Asking matter to execute white balance difference adjustment. Please feed back the DAC value in the adjusted each color temperature in an internal pattern.	METHOD=01 copy adjustments

Steps	Remarks
[Differential and copy adjustment] Execute adjustment for color temp. [NORMAL], and set data for color temp. [COOL], [WARM] by data shift WB of HD (or PAL) copies the adjustment data from an adjusted format side. **Note:** The adjustment does only color temp. [NORMAL]. A adjustment value difference from [NORMAL] is written to EEPROM as for [COOL] and [WARM] by operating a [OK] key. As for WB of HD (or RF), the adjustment data from an adjusted format side is copied simultaneously. Text color of the adjusted value changes into red → black at the same time too.	
1. Enter the service mode. Please receive the Analog-RF. Or, please select CVBS/YUV/HDMI. (No inputting is possible.). (Forbid Analog-RF with no signal.) 2. A number key [1] and [2] are operated and [WB-ADJ] is displayed. Check that the color temp is [NORMAL]. 3. A number key [0] is operated and select [METHOD 03]. 4. A number key [5] is operated and [INNER PATTERN] is displayed. INNER PATTERN 5. Select [G-CUTOFF] item, using the number-key [3] or [4], and set to [80], using the volume-key [+] or [-]. Also, [B-CUTOFF] and [R-CUTOFF] set to [80]. 6. Set [G-DRIVE] at [D0]. 7. Touch the signal receiver of color analyzer to the INNER PATTERN's center, and adjust B drive and R drive so x, y become the [COLOR TEMP NORMAL] in the table 1. 8. All RGB drive increase so that the maximum drive value of RGB may become [FF]. ([ALL-DRIVE] set to [FF].) 9. A number key [0] is operated and select [METHOD=01]. Please refer table2-3 to address.	METHOD=03 Differential and copy adjustment

Table 1-1, Color temp. target value (This data is target data by CA-100 in PAVCTH.)

COLOR TEMP	x	y
COOL	0.263	0.270
NORMAL	0.286	0.296
WARM	0.312	0.328

Table 1-2, Color temp. target value (This data is target data by CS-2000 in PAVCTH.)

COLOR TEMP	x	y
COOL	0.267	0.269
NORMAL	0.288	0.296
WARM	0.313	0.329

Table 2, Peaks EEP addresses (adjustment data)

signal / temp	Meaning of value	address
SD High	R-Cutoff for SD High	A0-070c
	G-Cutoff for SD High	A0-070d
	B-Cutoff for SD High	A0-070e
	R-Drive for SD High	A0-070f
	G-Drive for SD High	A0-0710
	B-Drive for SD High	A0-0711
SD Middle	R-Cutoff for SD Middle	A0-0712
	G-Cutoff for SD Middle	A0-0713
	B-Cutoff for SD Middle	A0-0714
	R-Drive for SD Middle	A0-0715
	G-Drive for SD Middle	A0-0716
	B-Drive for SD Middle	A0-0717
SD Low	R-Cutoff for SD Low	A0-0718
	G-Cutoff for SD Low	A0-0719
	B-Cutoff for SD Low	A0-071a
	R-Drive for SD Low	A0-071b
	G-Drive for SD Low	A0-071c
	B-Drive for SD Low	A0-071d
HD High	R-Cutoff for HD High	A0-071e
	G-Cutoff for HD High	A0-071f
	B-Cutoff for HD High	A0-0720
	R-Drive for HD High	A0-0721
	G-Drive for HD High	A0-0722
	B-Drive for HD High	A0-0723
HD Middle	R-Cutoff for HD Middle	A0-0724
	G-Cutoff for HD Middle	A0-0725
	B-Cutoff for HD Middle	A0-0726
	R-Drive for HD Middle	A0-0727
	G-Drive for HD Middle	A0-0728
	B-Drive for HD Middle	A0-0729
HD Low	R-Cutoff for HD Low	A0-072a
	G-Cutoff for HD Low	A0-072b
	B-Cutoff for HD Low	A0-072c
	R-Drive for HD Low	A0-072d
	G-Drive for HD Low	A0-072e
	B-Drive for HD Low	A0-072f

Table 3, Peaks EEP addresses (DIFF setting)

signal / temp	Meaning of value	address
SD High	R-Cutoff difference for SD High	A0-0730
	G-Cutoff difference for SD High	A0-0731
	B-Cutoff difference for SD High	A0-0732
	R-Drive difference for SD High	A0-0733
	G-Drive difference for SD High	A0-0734
	B-Drive difference for SD High	A0-0735
SD Middle	R-Cutoff difference for SD Middle	A0-0736
	G-Cutoff difference for SD Middle	A0-0737
	B-Cutoff difference for SD Middle	A0-0738
	R-Drive difference for SD Middle	A0-0739
	G-Drive difference for SD Middle	A0-073a
	B-Drive difference for SD Middle	A0-073b
SD Low	R-Cutoff difference for SD Low	A0-073c
	G-Cutoff difference for SD Low	A0-073d
	B-Cutoff difference for SD Low	A0-073e
	R-Drive difference for SD Low	A0-073f
	G-Drive difference for SD Low	A0-0740
	B-Drive difference for SD Low	A0-0741
HD High	R-Cutoff difference for HD High	A0-0742
	G-Cutoff difference for HD High	A0-0743
	B-Cutoff difference for HD High	A0-0744
	R-Drive difference for HD High	A0-0745
	G-Drive difference for HD High	A0-0746
	B-Drive difference for HD High	A0-0747
HD Middle	R-Cutoff difference for HD Middle	A0-0748
	G-Cutoff difference for HD Middle	A0-0749
	B-Cutoff difference for HD Middle	A0-074a
	R-Drive difference for HD Middle	A0-074b
	G-Drive difference for HD Middle	A0-074c
	B-Drive difference for HD Middle	A0-074d
HD Low	R-Cutoff difference for HD Low	A0-074e
	G-Cutoff difference for HD Low	A0-074f
	B-Cutoff difference for HD Low	A0-0750
	R-Drive difference for HD Low	A0-0751
	G-Drive difference for HD Low	A0-0752
	B-Drive difference for HD Low	A0-0753

11 Block Diagram

11.1. Main Block Diagram

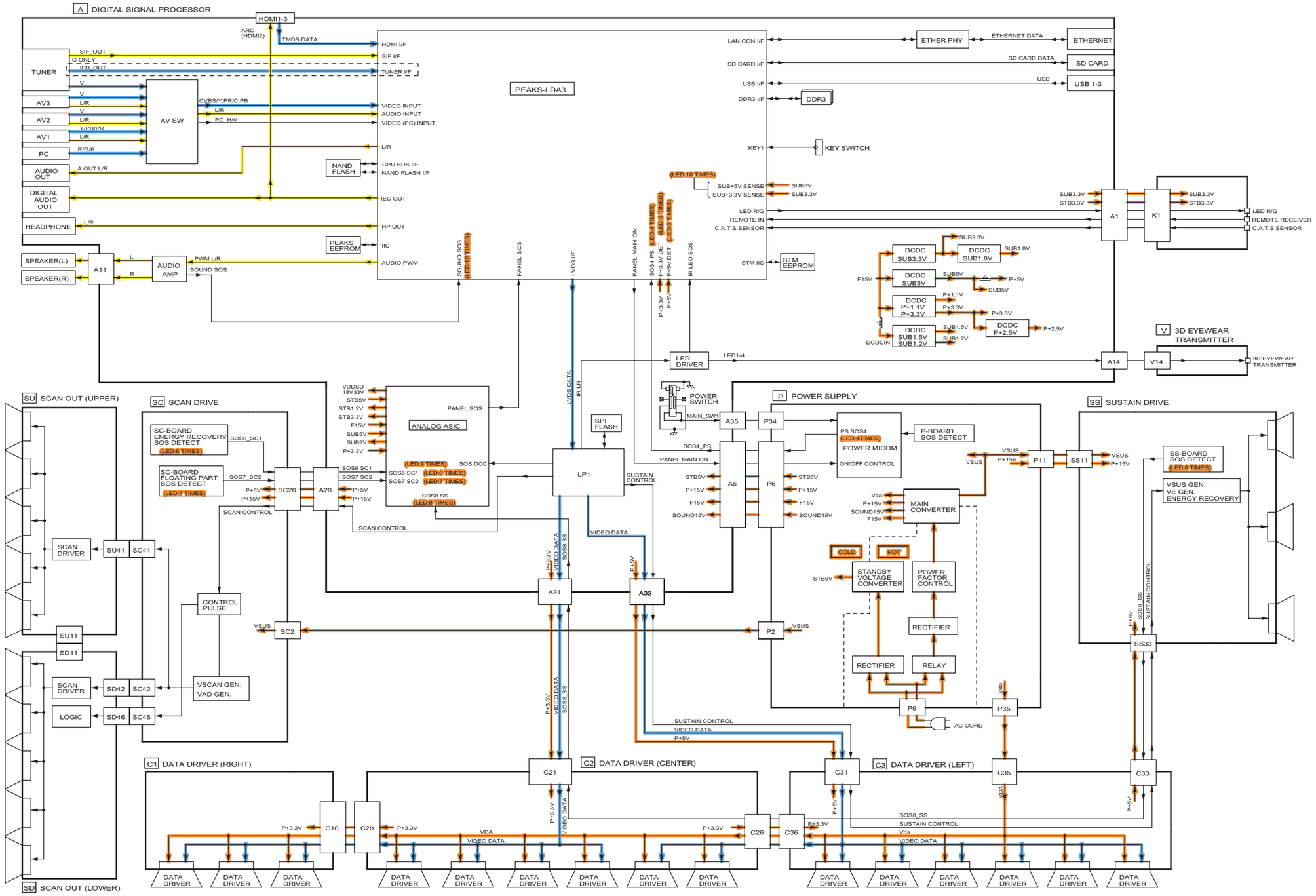

11.2. Block (1/4) Diagram

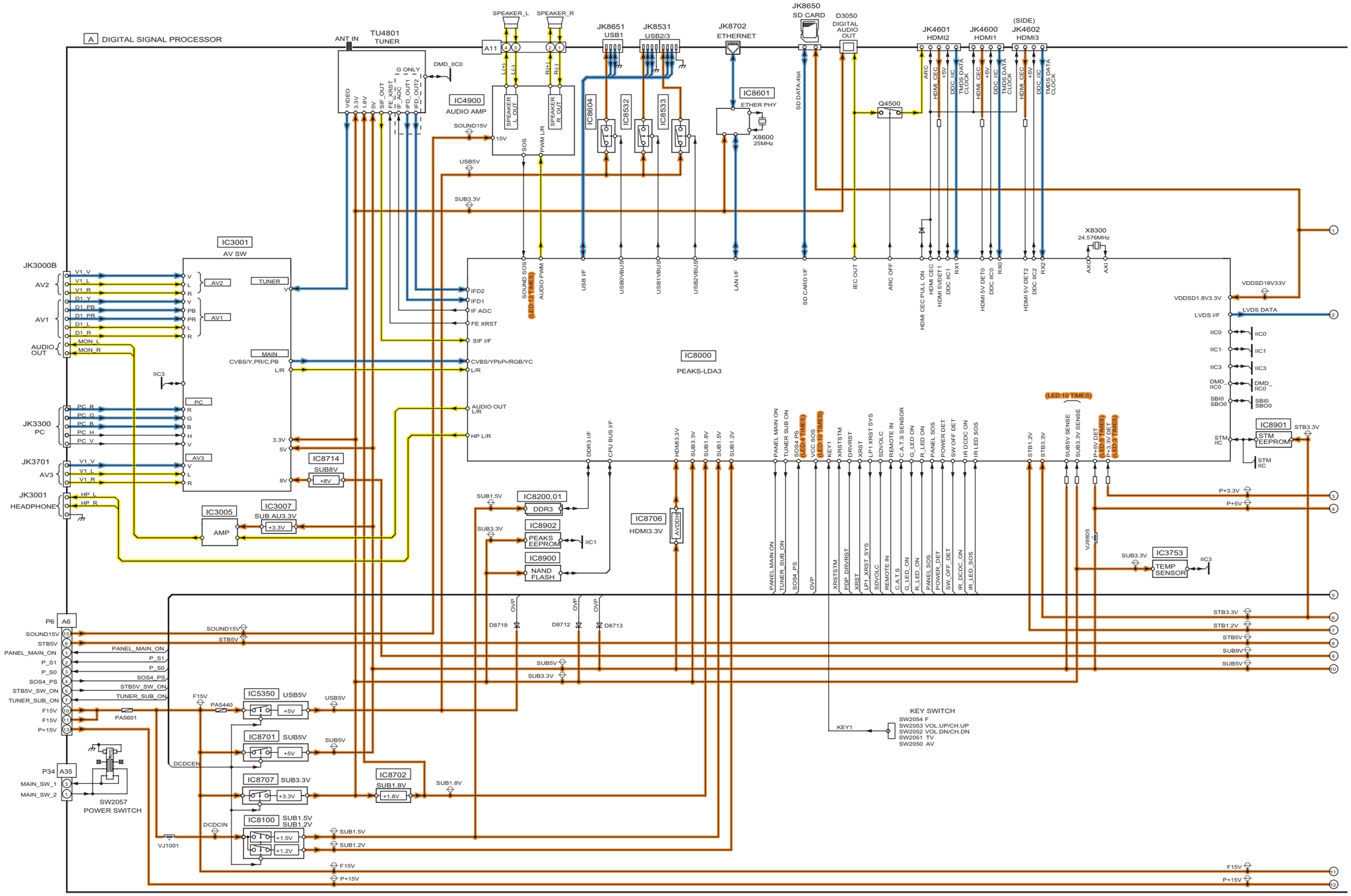

11.3. Block (2/4) Diagram

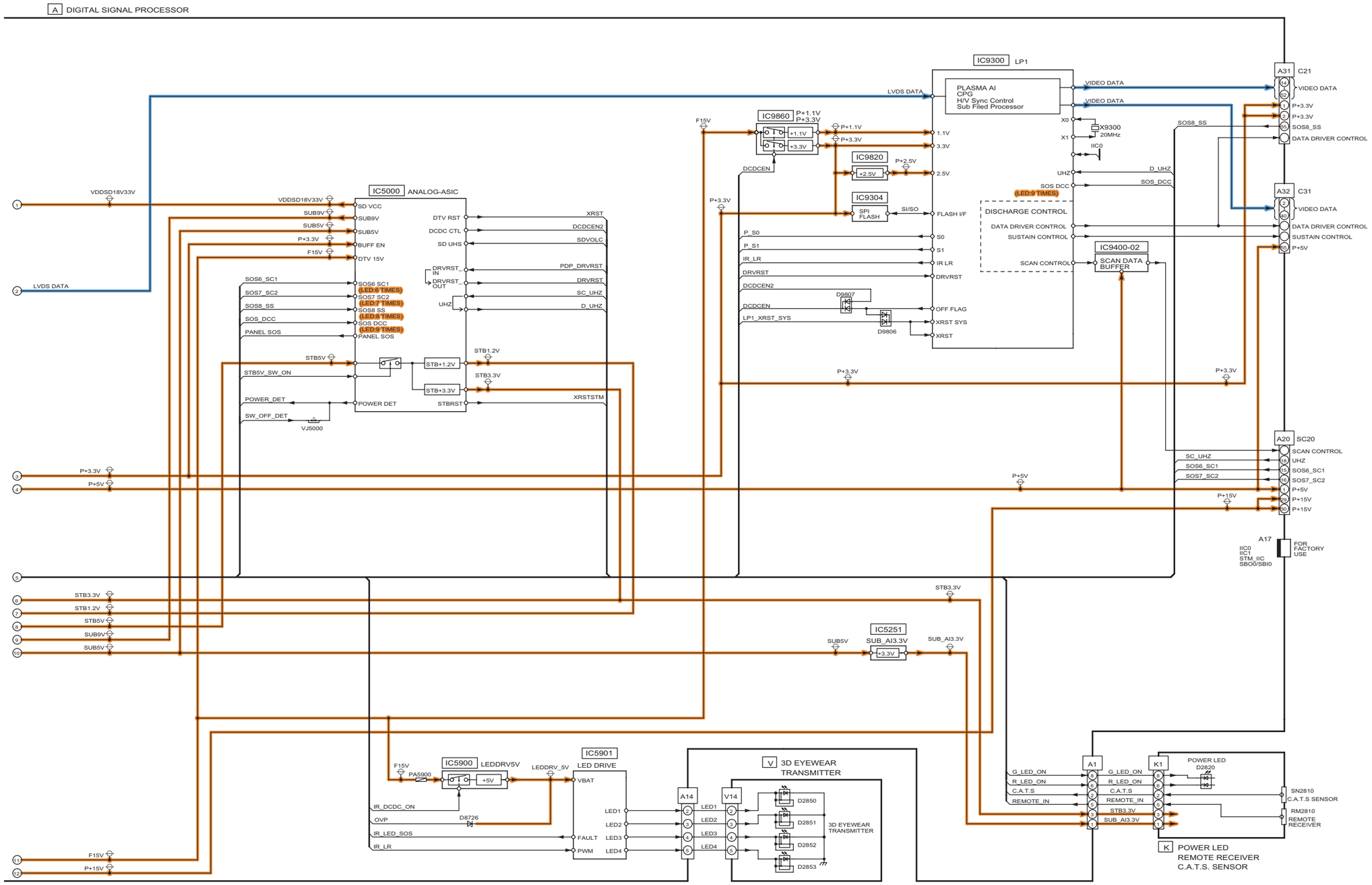

11.4. Block (3/4) Diagram

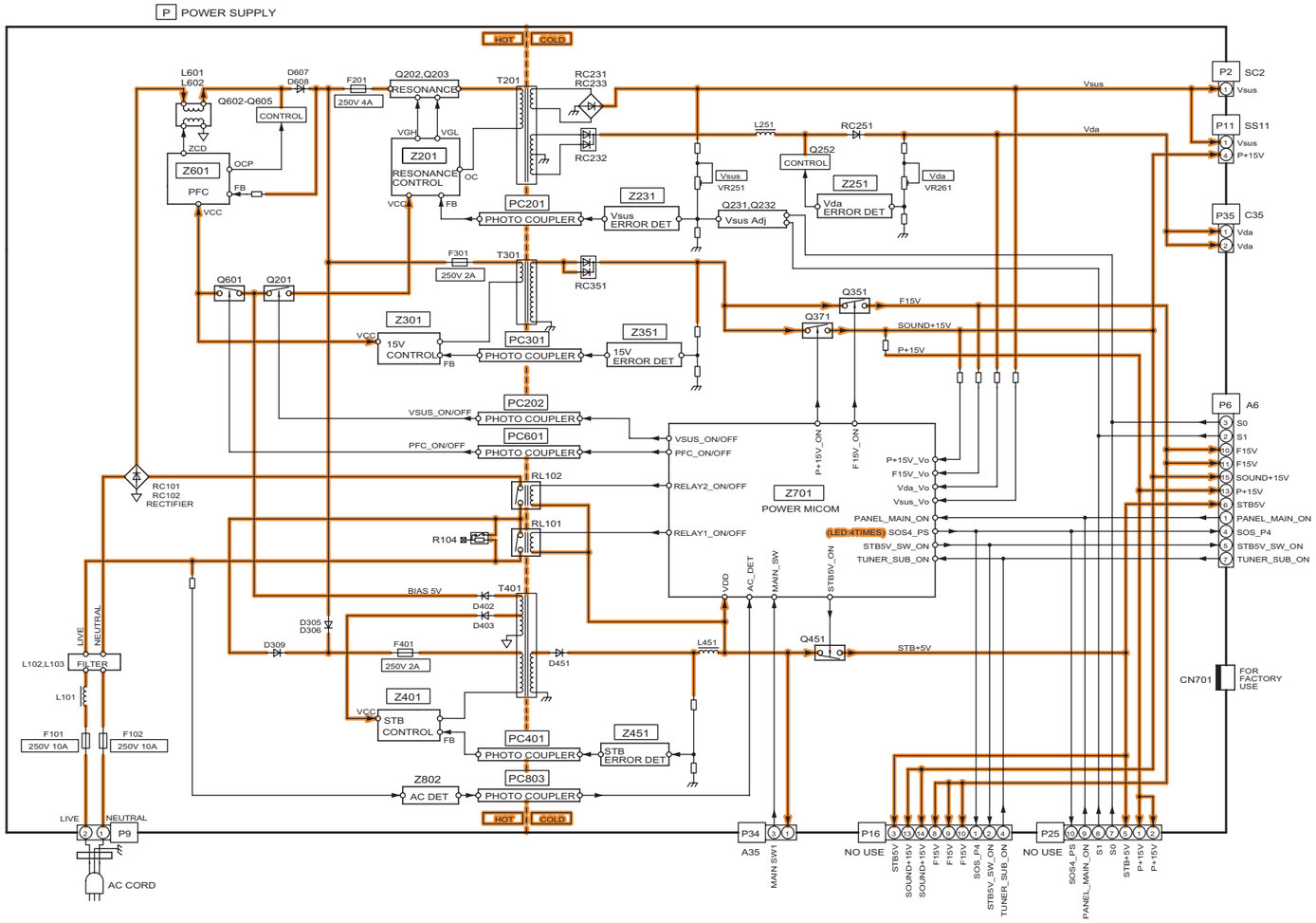

11.5. Block (4/4) Diagram

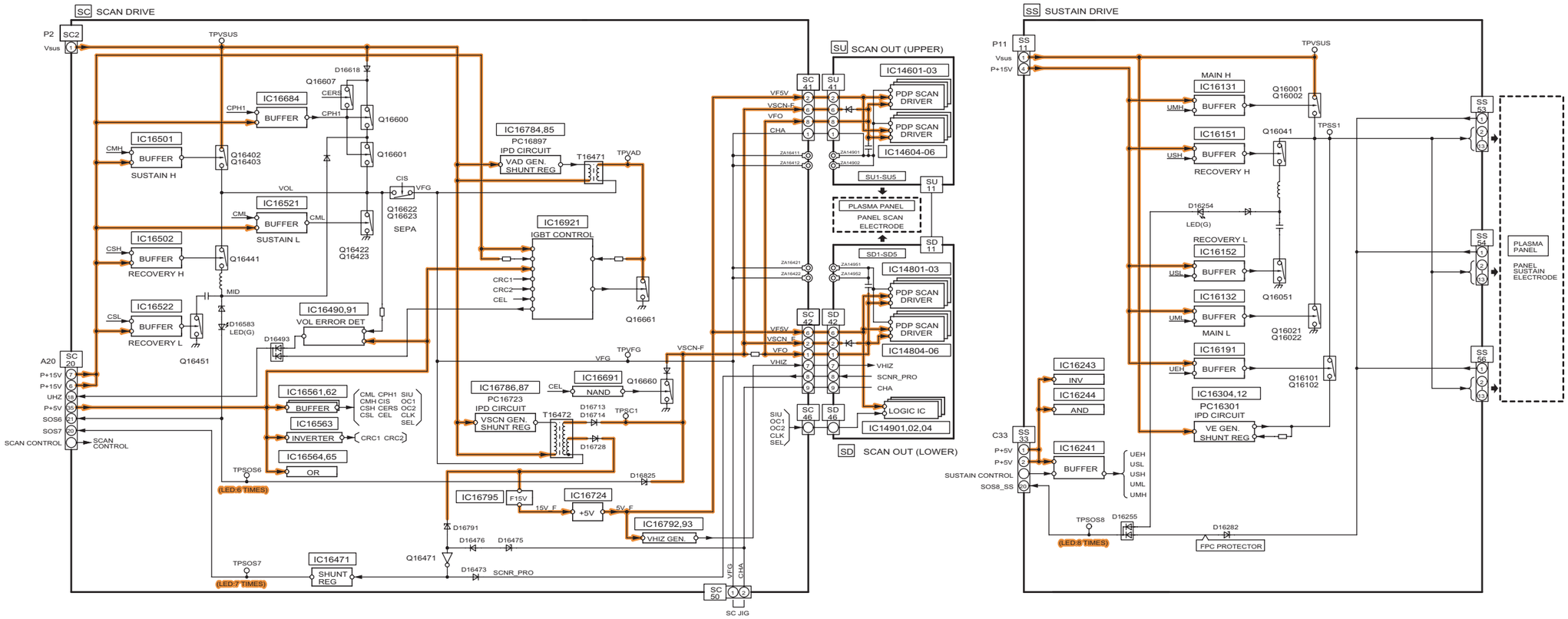

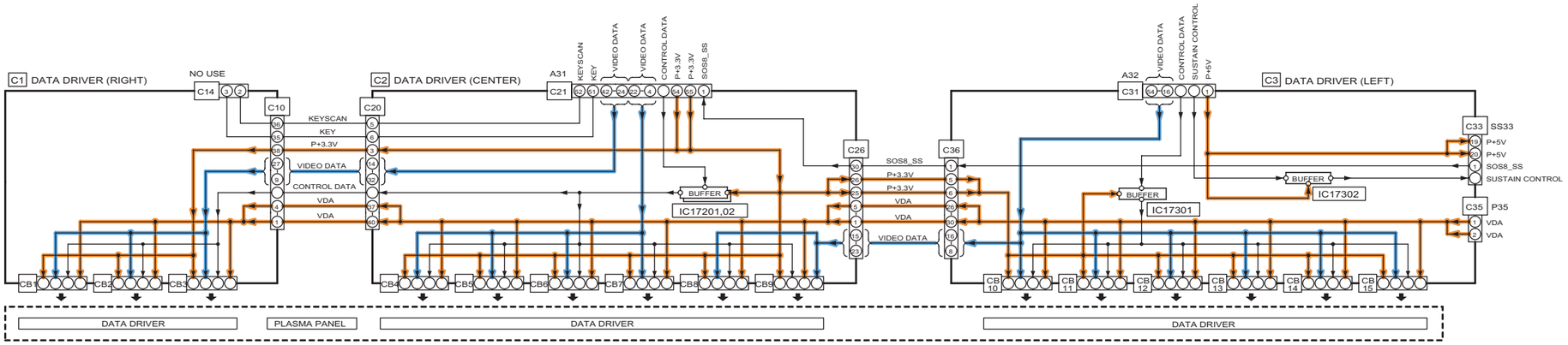

12 Wiring Connection Diagram

12.1. Caution statement

Caution:

Please confirm that all flexible cables are assembled correctly.
Also make sure that they are locked in the connectors.
Verify by giving the flexible cables a very slight pull.

12.2. Wiring (1)

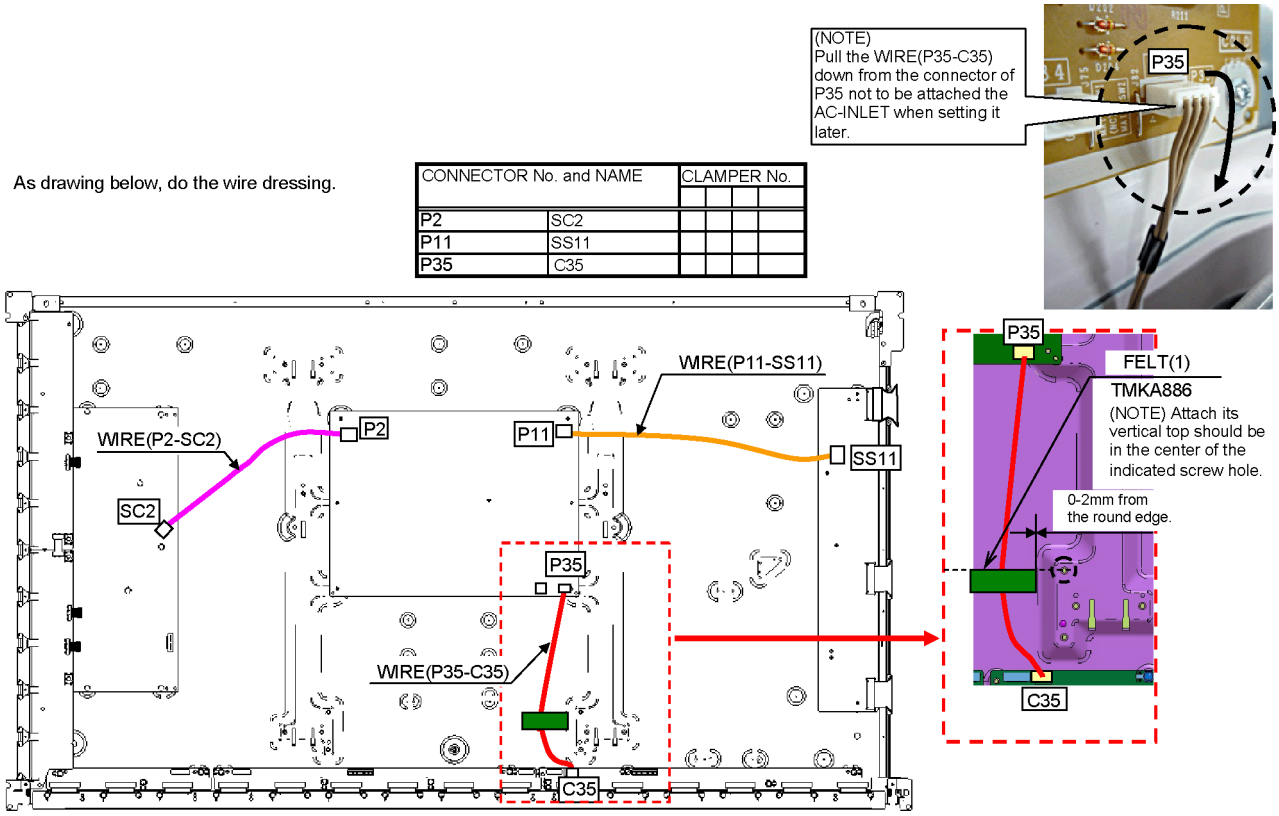

12.3. Wiring (2)

As drawing below, do the wire dressing.

CONNECTOR No. and NAME		CLAMPER No.			
		7			
A20	SC20				
A31	C21				
A32	C31				
A6	P6	O			
A35	P34				

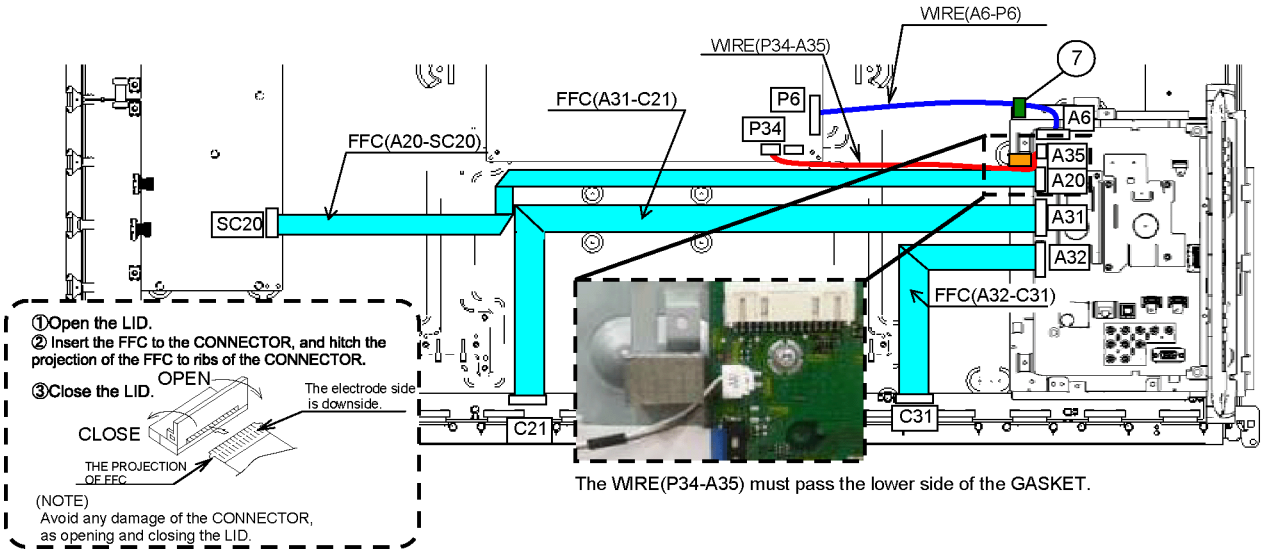

12.4. Wiring (3)

CONNECTOR No. and NAME	
P9	AC-INLET

As drawing below,
do the WIRE DRESSING.

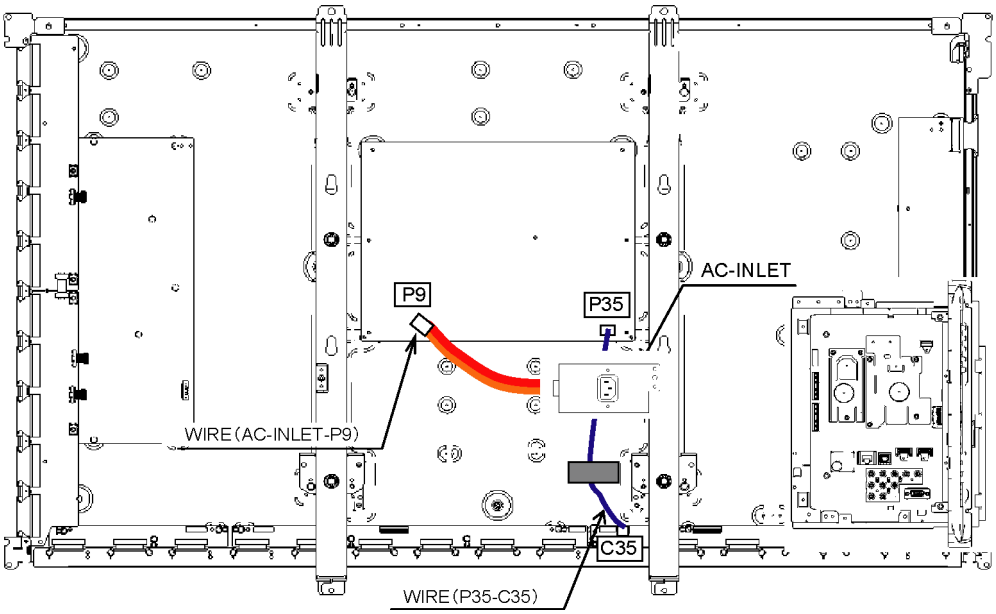

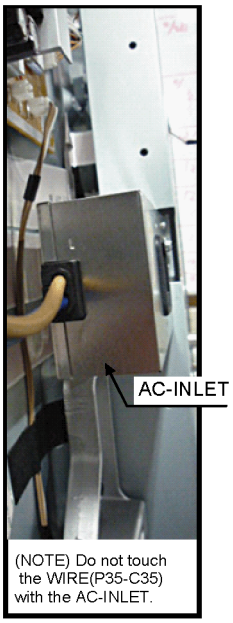

12.5. Wiring (4)

As drawing below,
do the WIRE DRESSING.

CONNECTOR No. and NAME		CLAMPER No.												
		②	③	④	⑤	⑥		⑧	⑨	⑩	⑪	⑫	⑬	⑭
A11	SPEAKER R							○	○	○	○	○	○	○
	SPEAKER L													
K1	A1	●	●	●	●	●								○
V14	A14	●	●	●	●	●								○

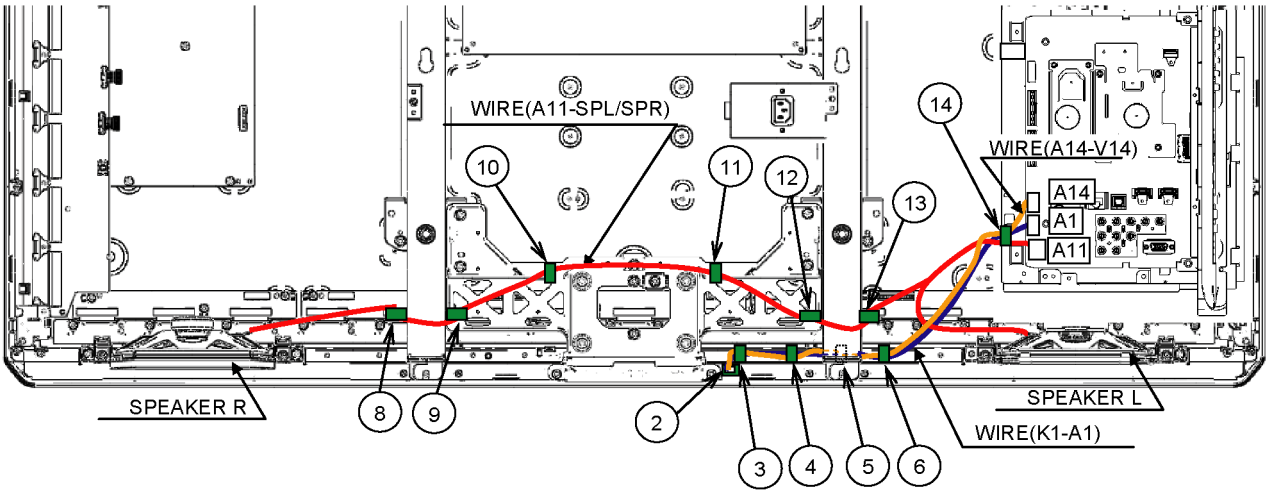

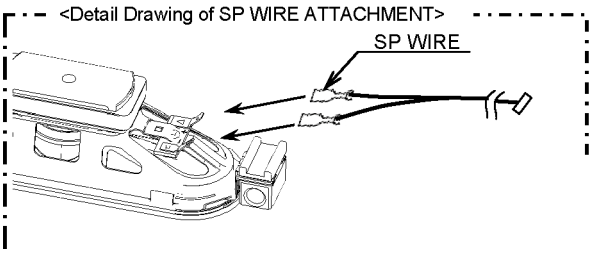

12.6. Wiring (5)

As drawing below,
1.Set the LED PANEL(PREP.) and 3D EMITTER PANEL(PREP.) in the CABINET.
2.Do the WIRE DRESSING.

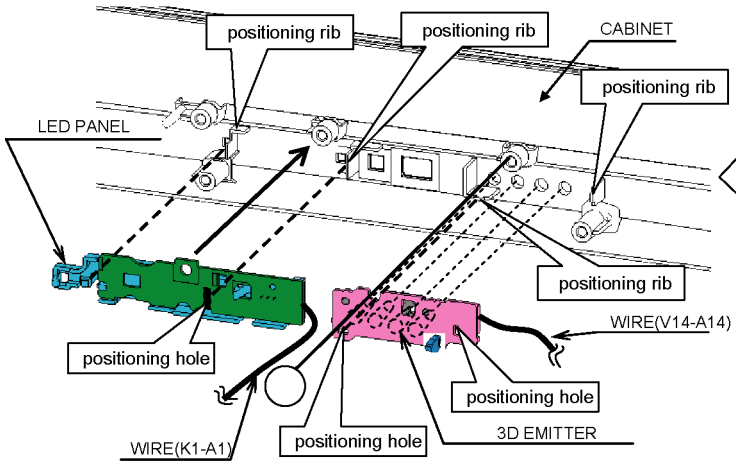

CONNECTOR No. and NAME		CLAMPER No.			
		①			
K1	A1	○			
V14	A14				

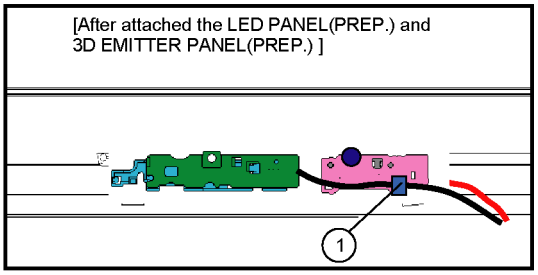

12.7. Wiring (6)

As drawing below,
1.Set the EDGE SADDLE in the GLASS HOLDER BOTTOM.
2.Do the WIRE DRESSING.

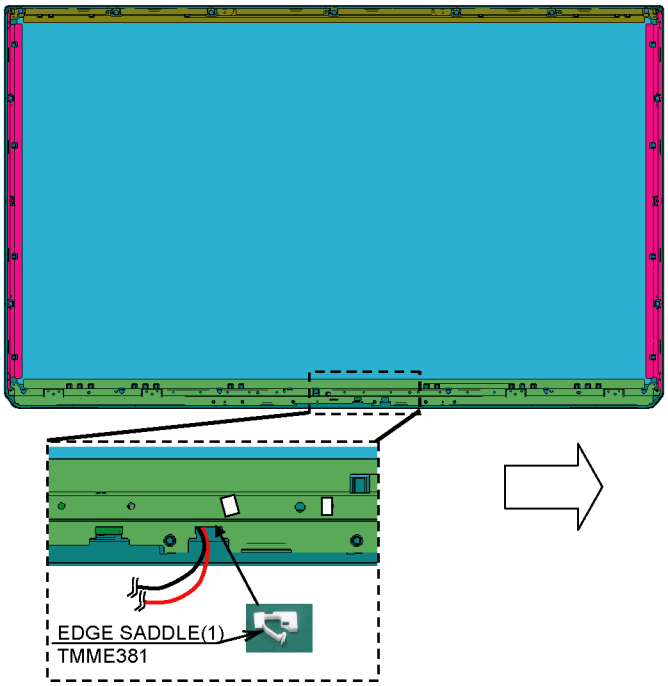

CONNECTOR No. and NAME		CLAMPER No.				
		2	3	4	5	6
K1	A1	O	O	O	O	O
V14	A14	O	O	O	O	O

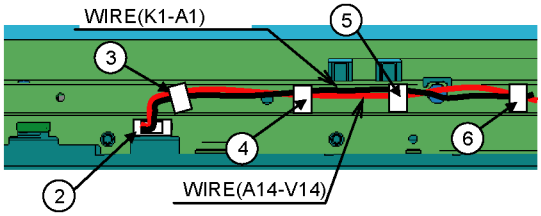

12.8. Wiring (7)

As drawing below,
1.Attach the FFC to each connector.
2.Peel the separator from the reverse side of the FFC and then stick it along the MARK LINE on the FE-CHASSIS.
(NOTE)FFC attachment should be done after screwing DATA DRIVER and C-PRINT.

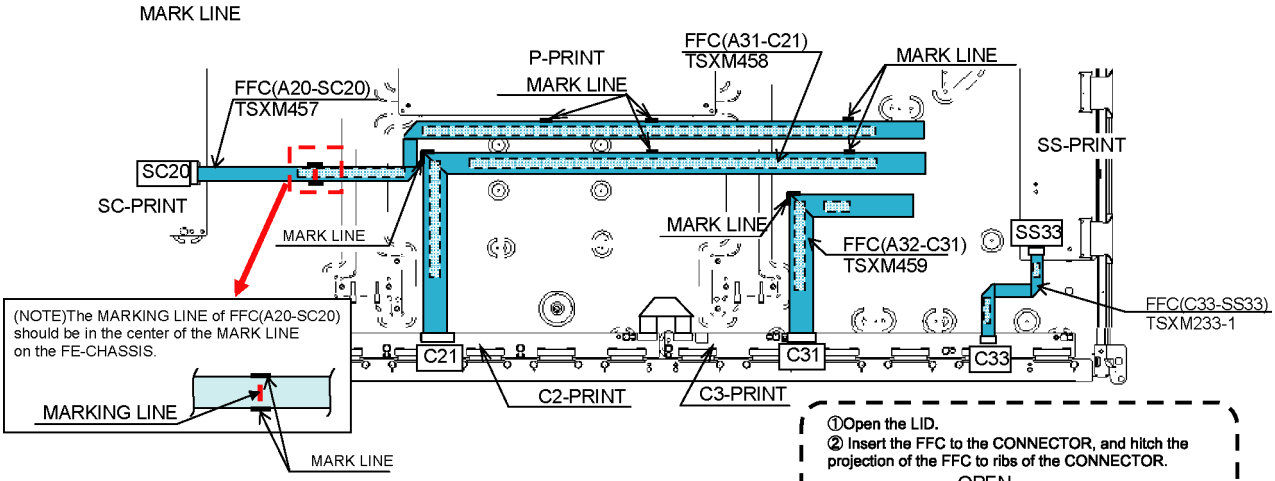

CONNECTOR No. and NAME	
A20	SC20
A31	C21
A32	C31
C33	SS33

※ is in sticking area with double-stick tape (on the FFC reverse side)

①Open the LID.
② Insert the FFC to the CONNECTOR, and hitch the projection of the FFC to ribs of the CONNECTOR.
③Close the LID.

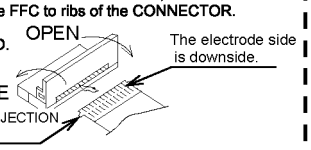

(NOTE)
Avoid any damage of the CONNECTOR, as opening and closing the LID.

Notes:

1. Resistor
   Unit of resistance is OHM [Ω] (K=1,000, M=1,000,000).
2. Capacitor
   Unit of capacitance is μF, unless otherwise noted.
3. Coil
   Unit of inductance is H, unless otherwise noted.
4. Test Point
   : Test Point position
5. Earth Symbol
   : Chassis Earth (Cold) : Line Earth (Hot)
6. Voltage Measurement
   Voltage is measured by a DC voltmeter.
   Conditions of the measurement are the following:
   Power Source ..... AC 110-240 V, 50/60Hz (P)
   AC 220-240 V, 50/60Hz (Except P)
   Receiving Signal ..... Colour Bar signal (RF)
   All customer's controls ..... Maximum positions
7. When arrow mark (↗) is found, connection is easily found from the direction of arrow.
8. Indicates the major signal flow. : Video ➡ Audio ⇨
9. This schematic diagram is the latest at the time of printing and subject to change without

Notice: Use the parts number indicated on the Replacement parts List.

Remarks:

1. The Power Circuit contains a circuit area which uses a separate power supply to isolate the earth connection.
   The circuit is defined by HOT and COLD indications in the schematic diagram. Take the follwing precautions.
   All circuits, except the Power Circuit, are cold.
   Precautions
   a. Do not touch the hot part or the hot and cold parts at the same time or you may be shocked.
   b. Do not short- circuit the hot and cold circuits or a fuse may blow and parts may break.
   c. Do not connect an instrument, such as an oscilloscope, to the hot and cold circuits simultaneously or a fuse may blow.
   Connect the earth of instruments to the earth connection of the circuit being measured.
   d. Make sure to disconnect the power plug before removing the chassis.

Note: All parts except parts mentioned [PAVCTH] in the Remarks column are supplied by AVC-CSPC.
Parts mentioned [PAVCTH] are supplied by PAVCTH.

Notice: Be sure to make your orders of replacement parts according to this list.

RTL (Retention Time Limited)

Note: The marking (RTL) indicates that the Retention Time is Limited for this item.
After the discontinuation of this assembly in production, the item will continue to be available for a specific period of time. The retention period of availability is dependant on the type of assembly, and in accordance with the laws governing part and product retention. After the end of this period, the assembly will no longer be available.

Abbreviation of part name and description

1. Resistor

Example:

ERD25TJ104 C 100KOHM, J, 1/4W

Type Allowance

2. Capacitor

Example:

ECKF1H103ZF C 0.01UF, Z, 50V

Type Allowance

Type	Allowance
C : Carbon F : Fuse M : Metal Oxide Metal FIlm S : Solid W : Wire Wound	F : ±1% G : ±2% J : ±5% K : ±10% M : ±20%

Type	Allowance
C : Ceramic E : Electrolytic P : Polyester Polypropylene T : Tantalum	C : ±0.25pF D : ±0.5pF F : ±1pF G : ±3pF J : ±5pF K : ±10pF L : ±15pF M : ±20pF P : +100%, -0% Z : +80%, -20%

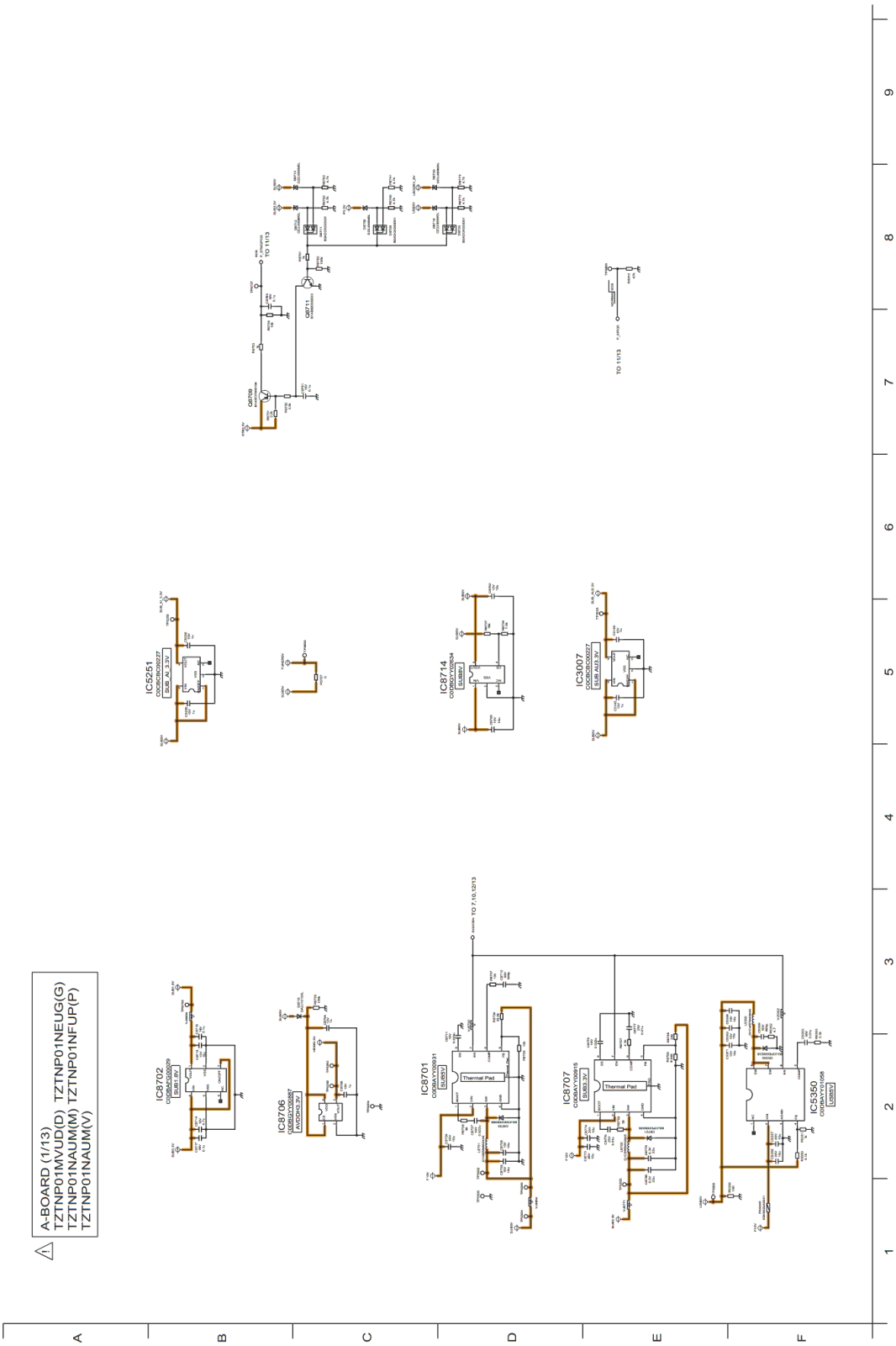
A-BOARD (1/13)
TZTNP01MVUD(D) TZTNP01NEUG(G)
TZTNP01NAUM(M) TZTNP01NFUP(P)
TZTNP01NAUM(V)
IC8702
IC8706
IC8701
IC8707
IC5350
IC5251
IC8714
IC3007
Thermal Pad
TO 1/13
TO 7/10/12/13
A
B
C
D
E
F
1
2
3
4
5
6
7
8
9

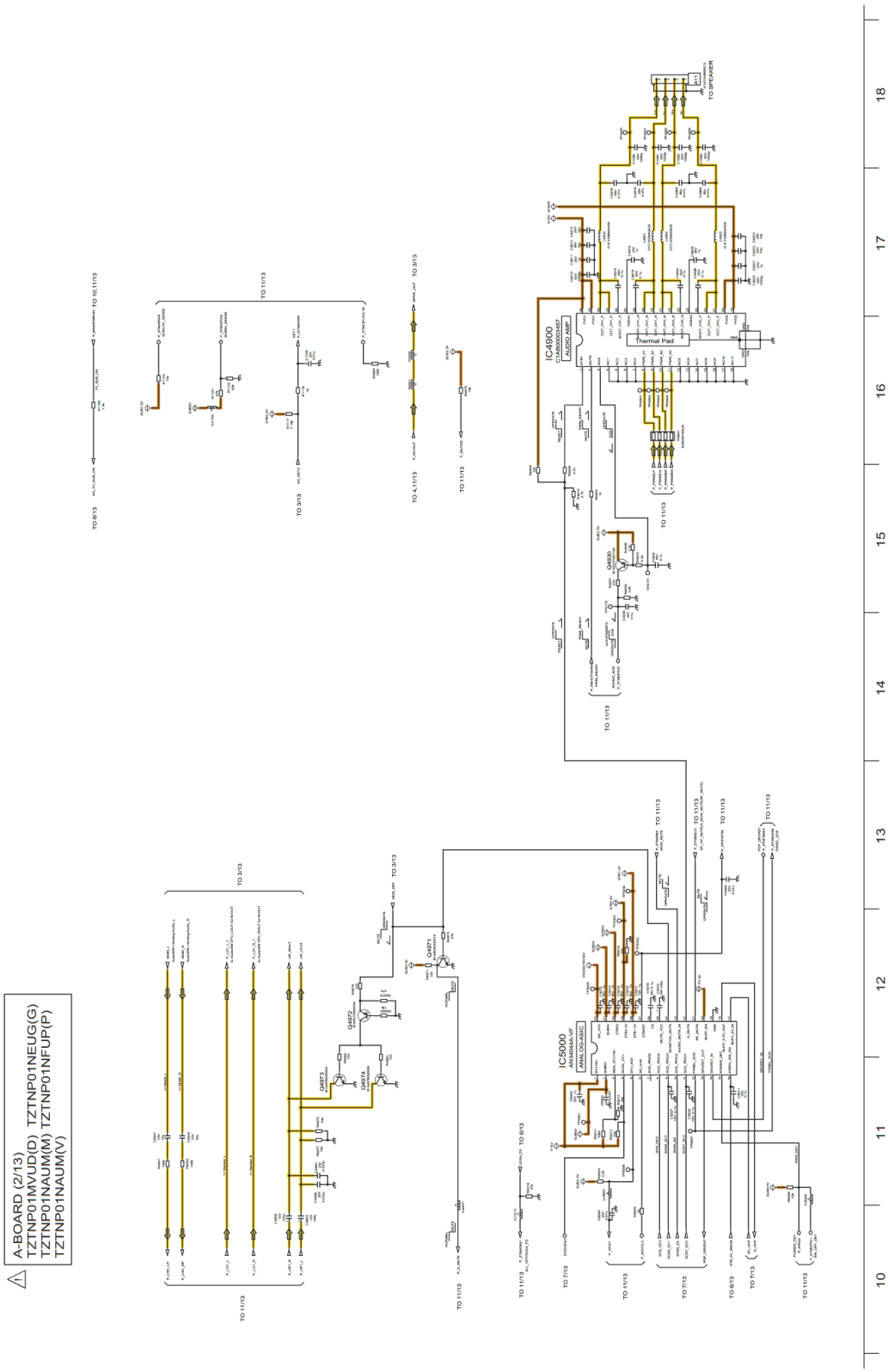
A-BOARD (2/13)
TZTNP01MVUD(D) TZTNP01NEUG(G)
TZTNP01NAUM(M) TZTNP01NFUP(P)
TZTNP01NAUM(V)
IC4900
Thermal Pad
IC5000
Q4872
Q4873
Q4874
Q4871
Q4850
TO 11/13
TO 3/13
TO 4.1/13
TO 6/13
TO 7/13
TO 10.11/13
TO SPEAKER
10
11
12
13
14
15
16
17
18

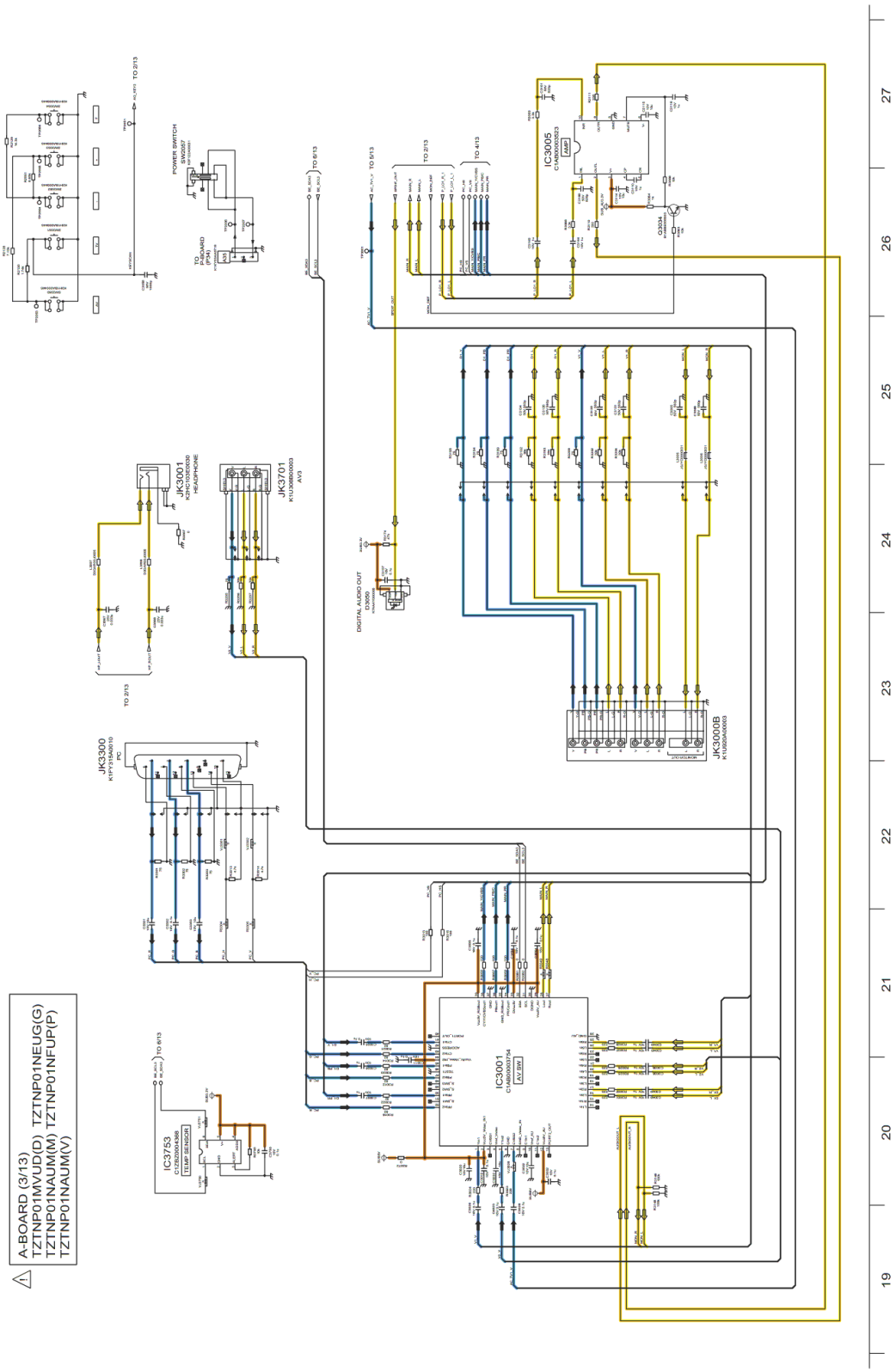
A-BOARD (3/13)
TZTNP01MVUD(D) TZTNP01NEUG(G)
TZTNP01NAUM(M) TZTNP01NFUP(P)
TZTNP01NAUM(V)
IC3001
C1AB00003754
AV SW
IC3005
C1AB00003253
AMP
JK3300
K1FY3154001
PC
JK3001
K2CD03000020
HEADPHONE
JK3701
K1U30B00003
AV3
JK3000B
K1U60AA0003
IC3753
C1CB00000408
TILAMP SENSOR
POWER SWITCH
SW2007
DIGITAL AUDIO OUT
CN300
TO 2/13
TO 5/13
TO 4/13
TO 6/13
19
20
21
22
23
24
25
26
27

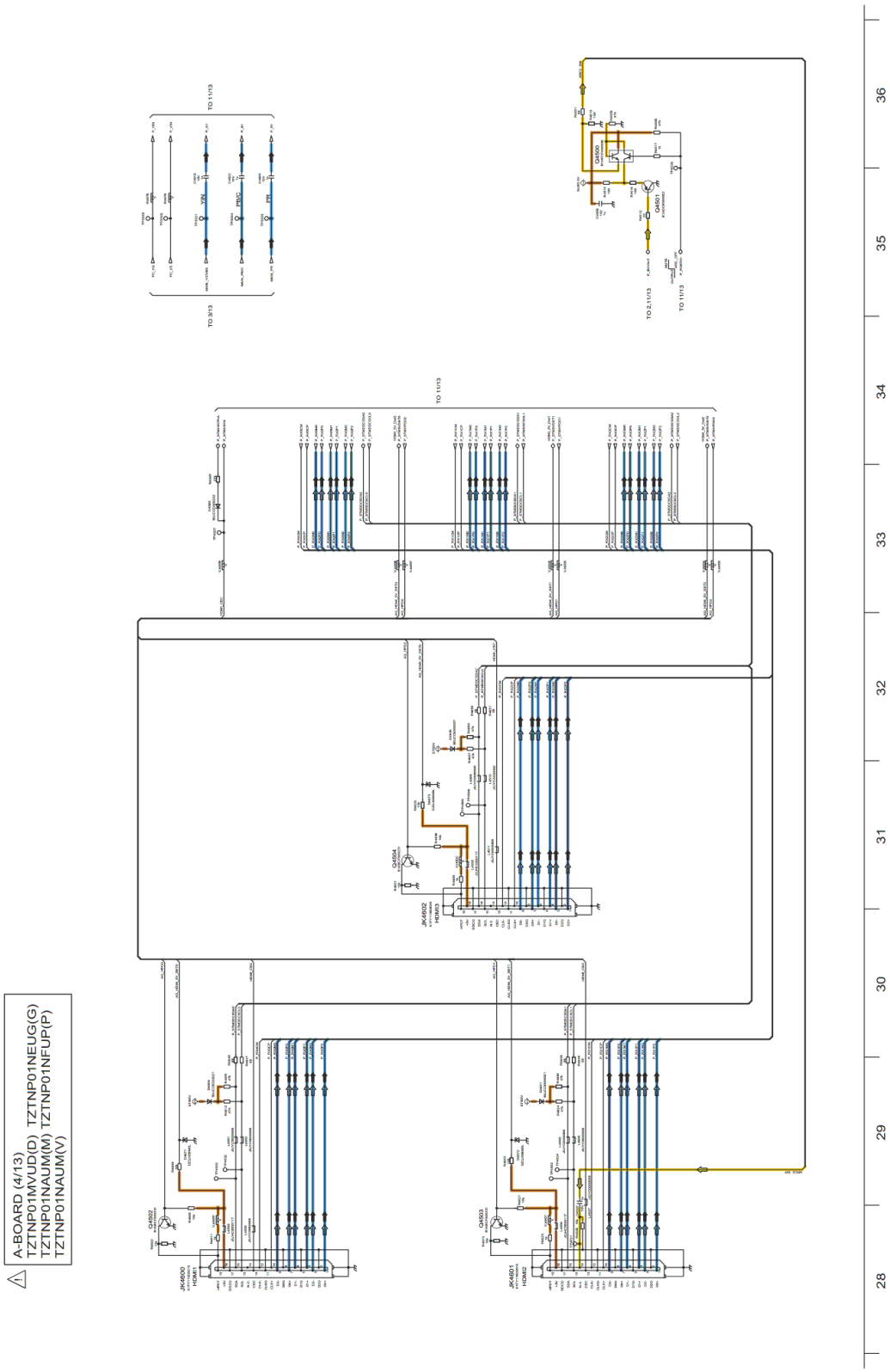
A-BOARD (4/13)
TZTNP01MVUD(D) TZTNP01NEUG(G)
TZTNP01NAUM(M) TZTNP01NFUP(P)
TZTNP01NAUM(V)
TO 3/13
TO 11/13
TO 2.11/13
TO 11/13
TO 11/13
Q4500
Q4501
Q4504
JK4602
HDMI3
Q4502
JK4600
HDMI1
Q4503
JK4601
HDMI2
28
29
30
31
32
33
34
35
36

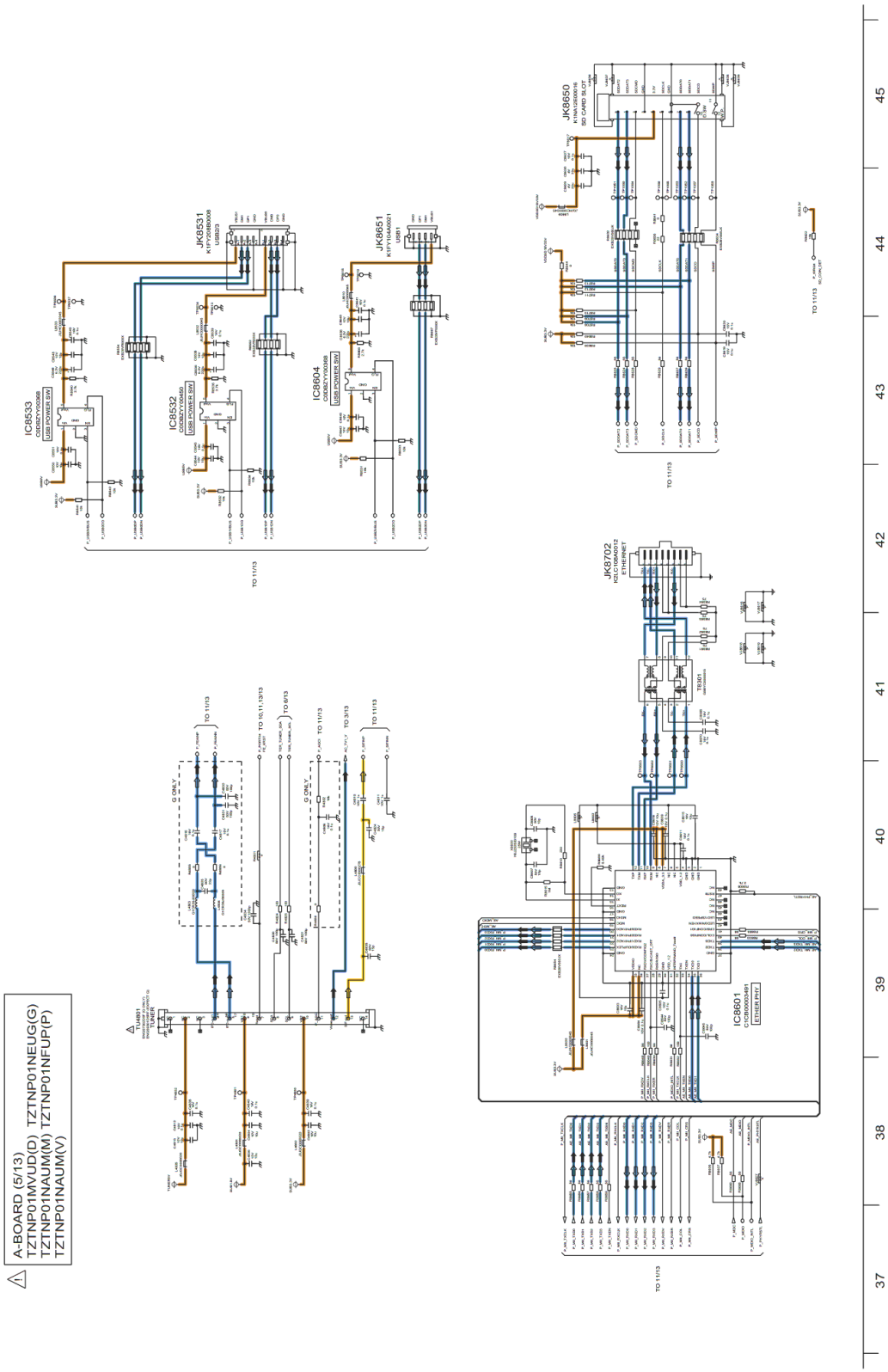
A-BOARD (5/13)
TZTNP01MVUD(D) TZTNP01NEUG(G)
TZTNP01NAUM(M) TZTNP01NFUP(P)
TZTNP01NAUM(V)
TU4801
TUNER
G ONLY
TO 11/13
TO 10,11,13/13
TO 6/13
TO 3/13
IC8533
USB POWER SW
IC8532
USB POWER SW
IC8604
USB POWER SW
JK8531
USB(3)
JK8651
USB1
JK8650
SD CARD SLOT
JK8702
ETHERNET
TR301
IC8601
ETHER PHY
45
44
43
42
41
40
39
38
37

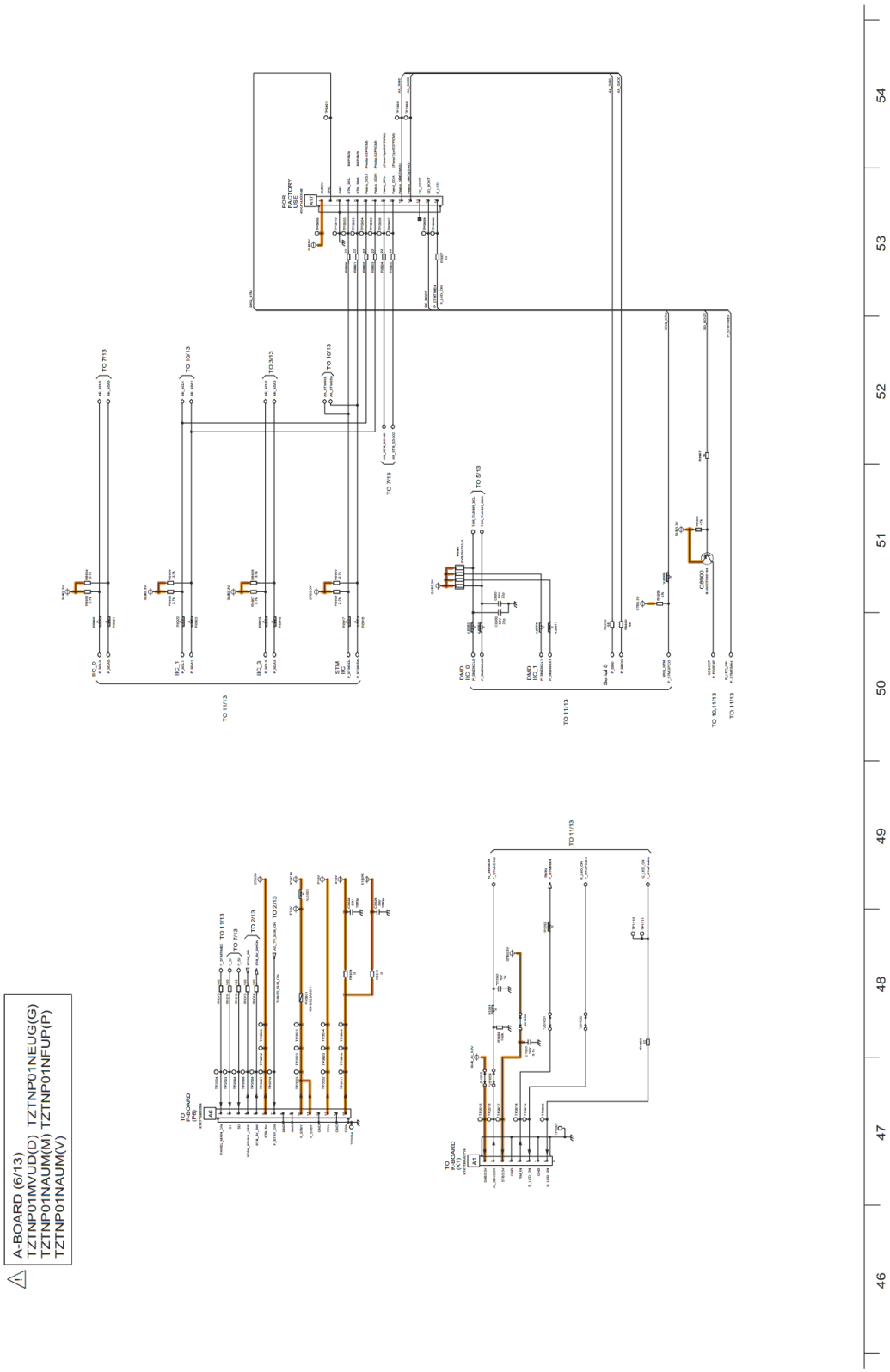
A-BOARD (6/13)
TZTNP01MVUD(D) TZTNP01NEUG(G)
TZTNP01NAUM(M) TZTNP01NFUP(P)
TZTNP01NAUM(V)
FOR FACTORY USE
IC-0
IC-1
IC-2
STM IC
DMD IC-0
DMD IC-1
Serial 0
CM800
TO P-BOARD
TO 1/13
TO 2/13
TO 3/13
TO 5/13
TO 7/13
TO 10/13
TO 11/13
TO 16/13
46
47
48
49
50
51
52
53
54

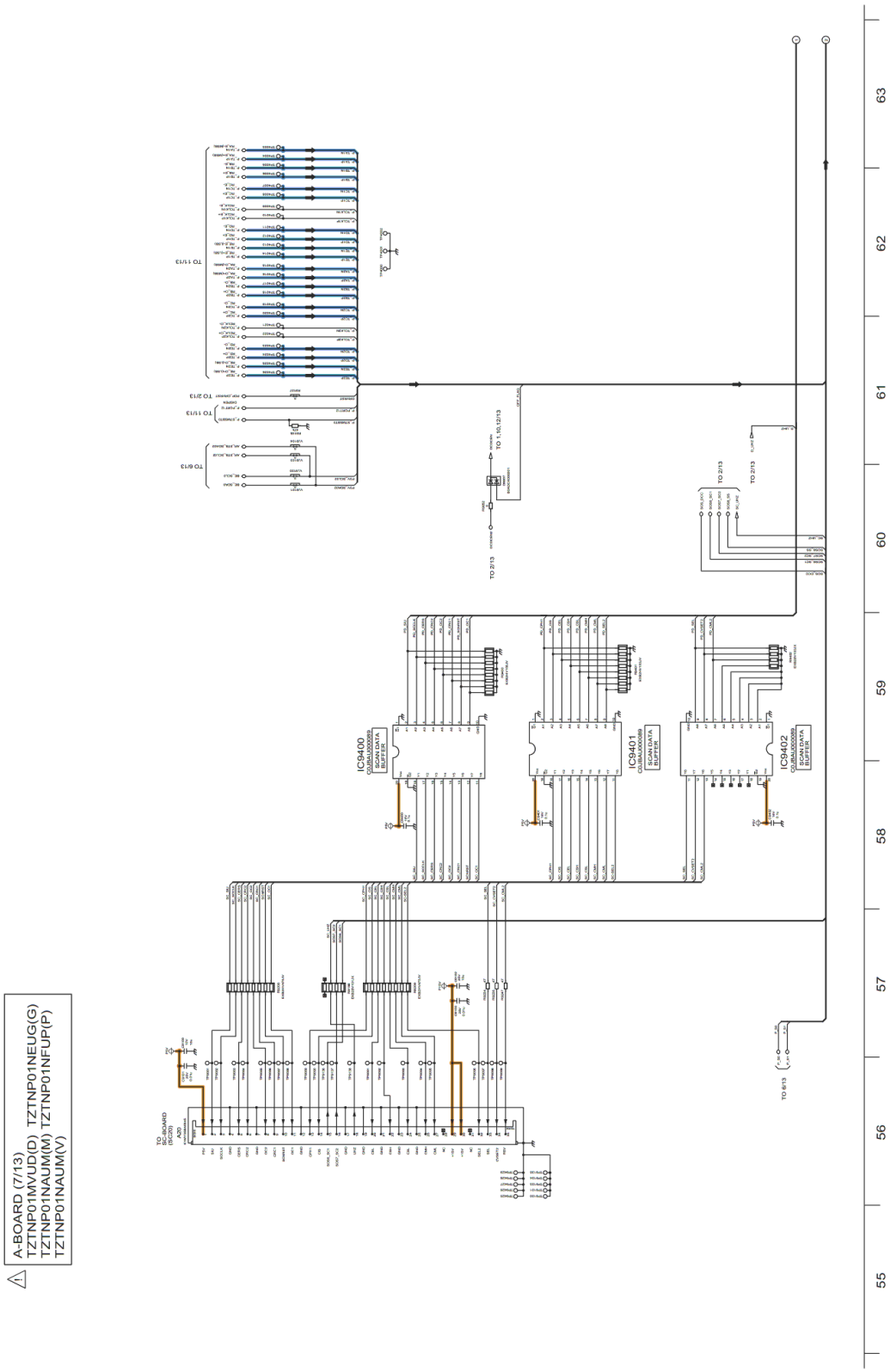
A-BOARD (7/13)
TZTNP01MVUD(D) TZTNP01NEUG(G)
TZTNP01NAUM(M) TZTNP01NFUP(P)
TZTNP01NAUM(V)
IC9400
IC9401
IC9402
SCAN DATA BUFFER
TO SC-BOARD (SC2/3)
A20
TO 6/13
TO 11/13
TO 2/13
TO 1,10,12/13
TO 8/13
55
56
57
58
59
60
61
62
63

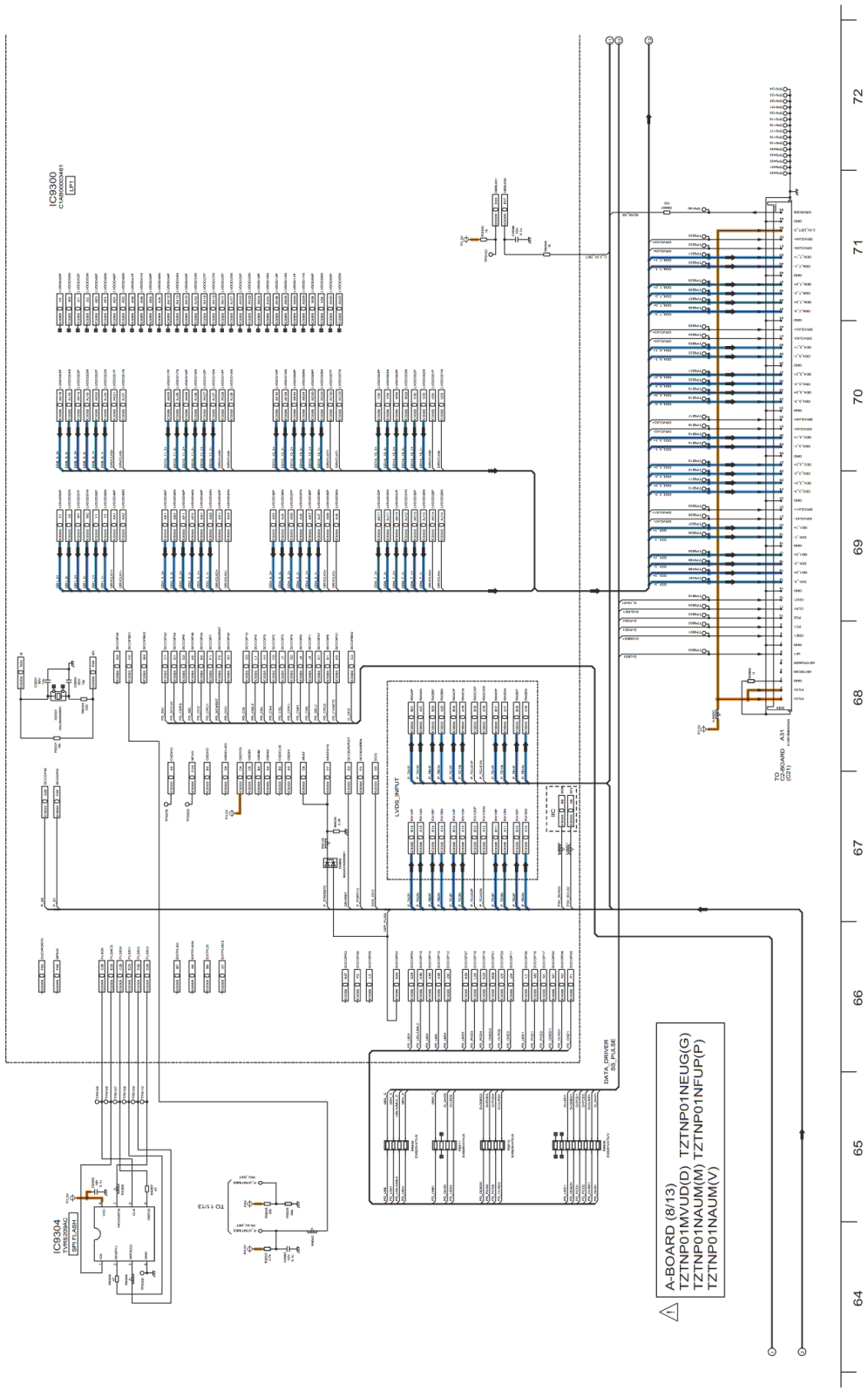
IC9300
C1AB00003461
IC9304
TZTNP01NFUF
SPI FLASH
TO 1/13
LVDS_INPUT
DATA_DRIVER
SS_PLATE
TO
TZTNP01NFUF
(C21)
A31
A-BOARD (8/13)
TZTNP01MVUD(D) TZTNP01NEUG(G)
TZTNP01NAUM(M) TZTNP01NFUF(P)
TZTNP01NAUM(V)
72
71
70
69
68
67
66
65
64

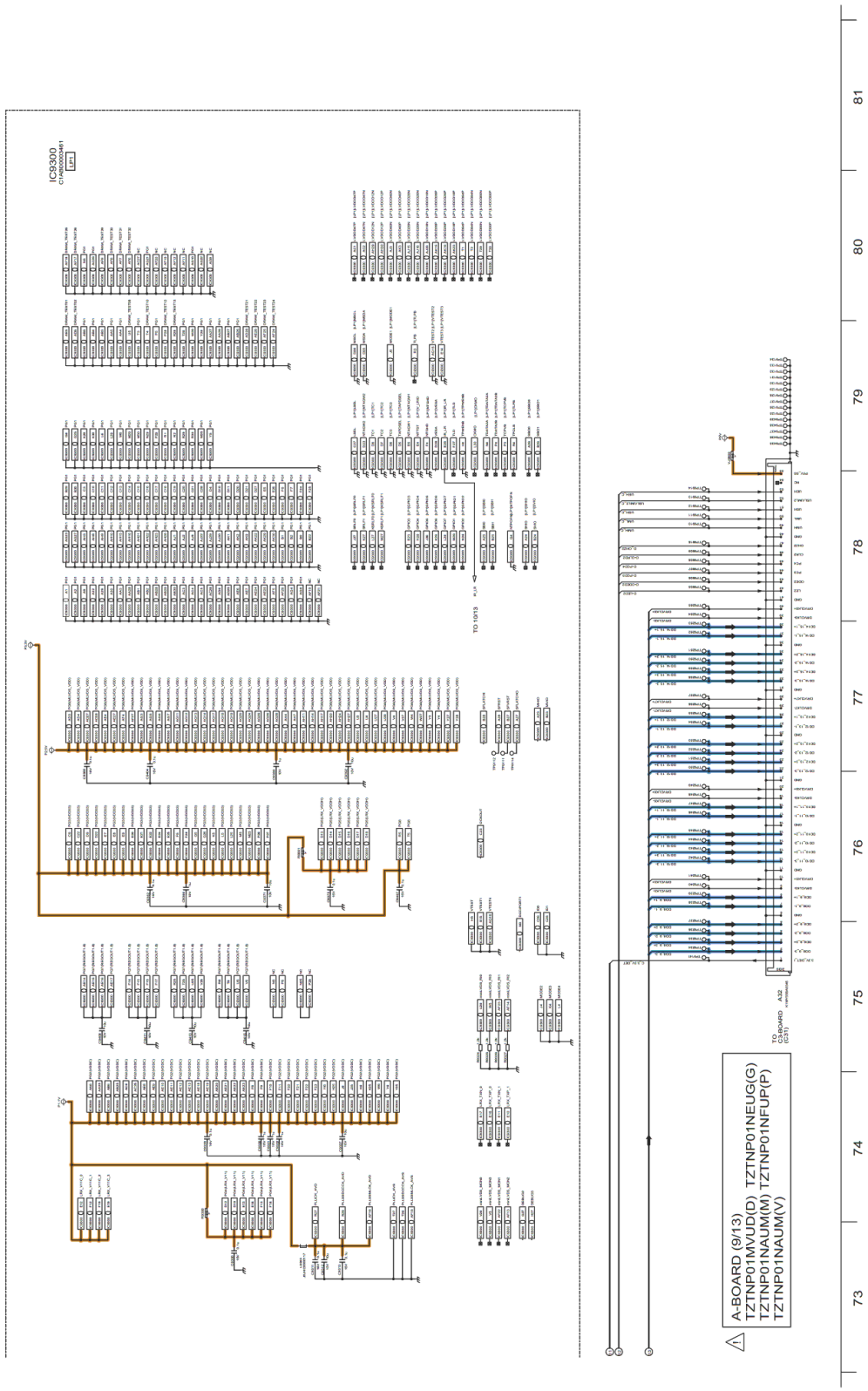
IC9300
C1A6000003461
TO 10/13
TO C3 BOARD (C31)
A32
A-BOARD (9/13)
TZTNP01MVUD(D) TZTNP01NEUG(G)
TZTNP01NAUM(M) TZTNP01NFUP(P)
TZTNP01NAUM(V)
73
74
75
76
77
78
79
80
81

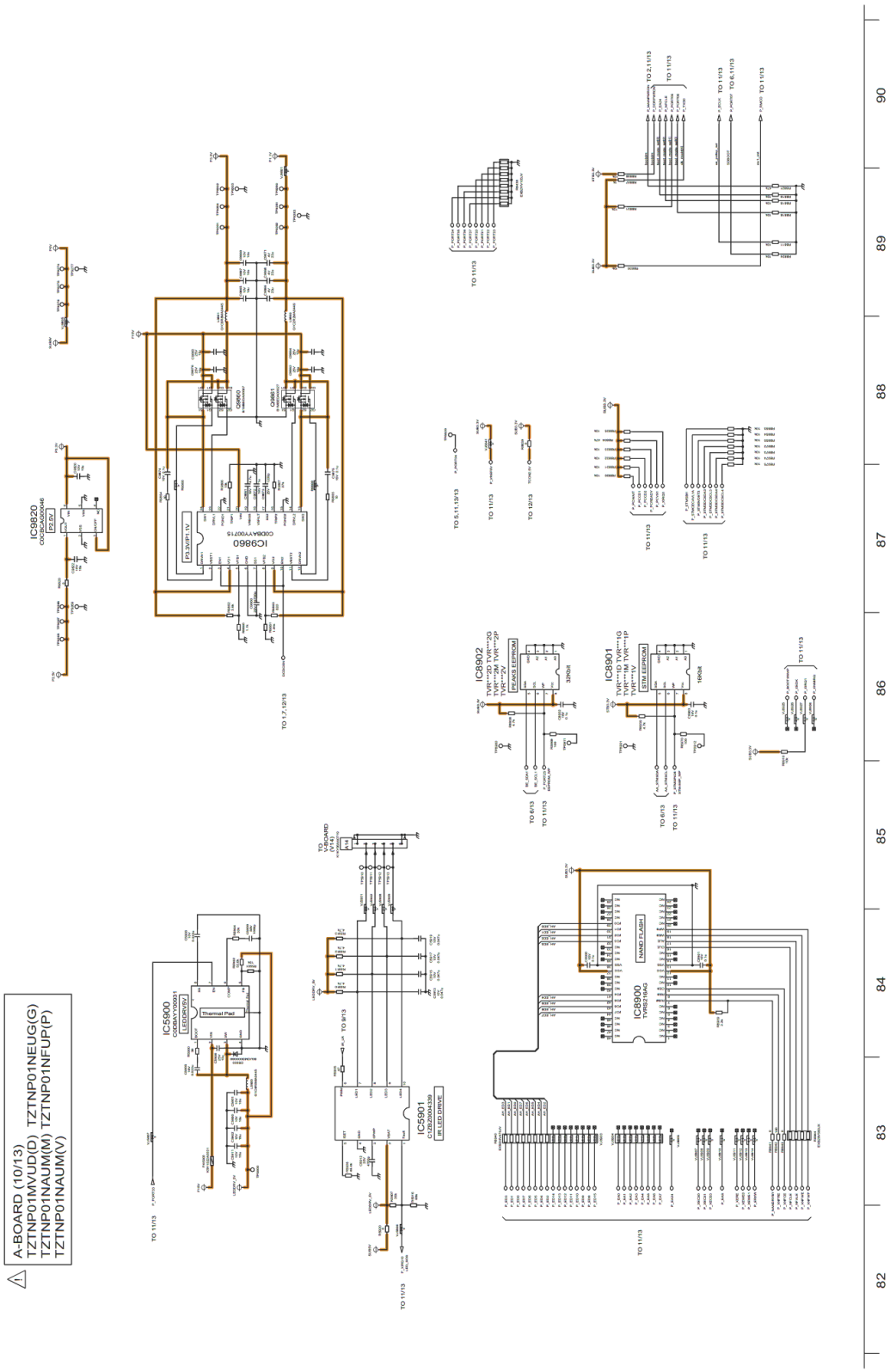
A-BOARD (10/13)
TZTNP01MVUD(D) TZTNP01NEUG(G)
TZTNP01NAUM(M) TZTNP01NFUP(P)
TZTNP01NAUM(V)
IC9920
IC9860
IC5900
IC5901
IC8902
IC8901
IC8900
Thermal Pad
PEAKS EEPROM
ETM EEPROM
NAND FLASH
TO 1,7,12/13
TO 11/13
TO 5,11,13/13
TO 12/13
TO 6/13
TO 9/13
82
83
84
85
86
87
88
89
90

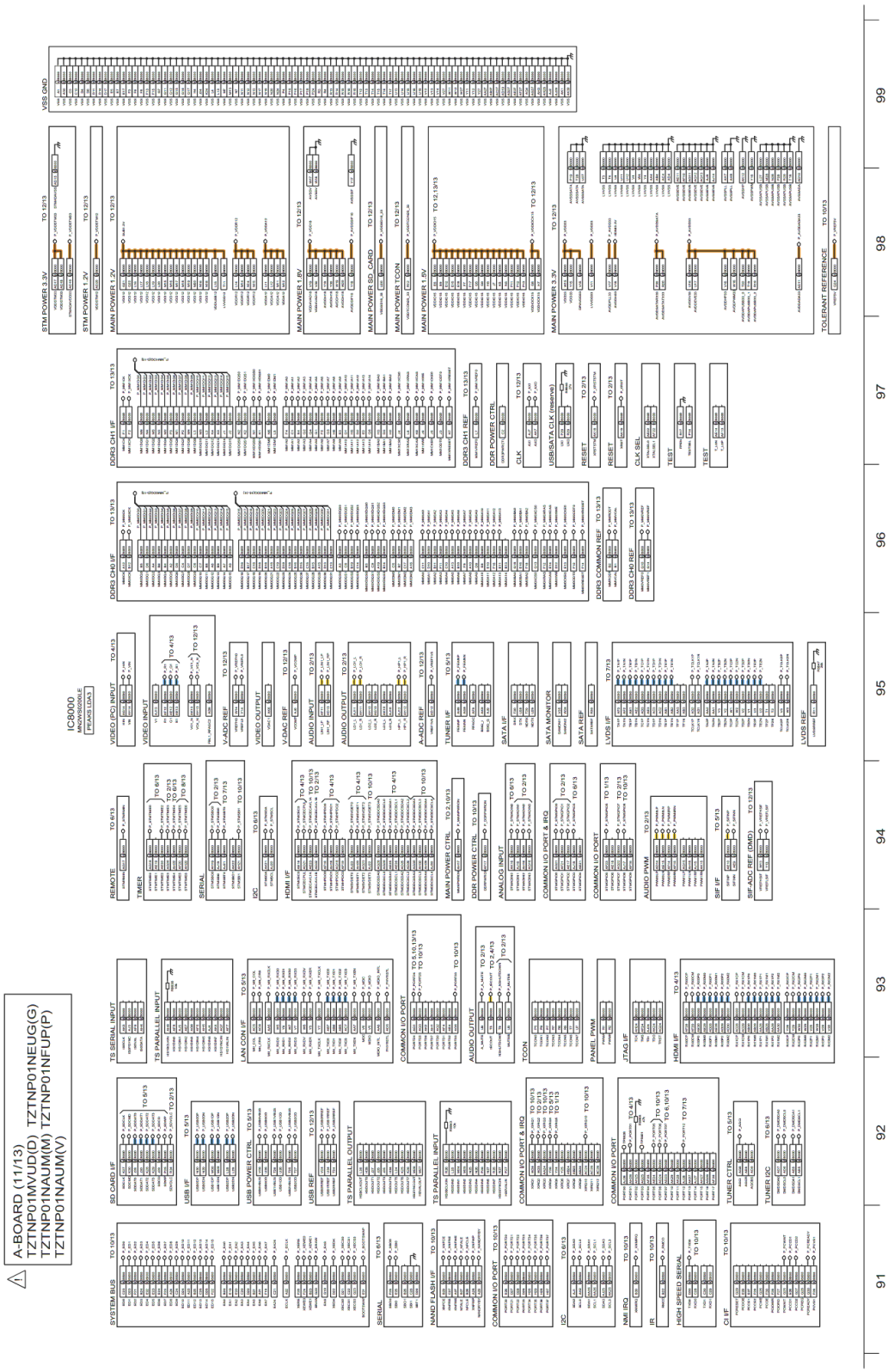
A-BOARD (11/13)
TZTNP01MVUD(D) TZTNP01NEUG(G)
TZTNP01NAUM(M) TZTNP01NFUP(P)
TZTNP01NAUM(V)
IC8000
MNOWS0006LE
(PEAKS LEAK)
SYSTEM BUS
SD CARD I/F
USB I/F
USB POWER CTRL
USB REF
TS PARALLEL OUTPUT
TS SERIAL INPUT
TS PARALLEL INPUT
LAN CON I/F
COMMON I/O PORT
AUDIO OUTPUT
TCON
PANEL PWM
JTAG I/F
HDMI I/F
TUNER CTRL
TUNER I2C
SERIAL
NAND FLASH I/F
COMMON I/O PORT
I2C
NMI IRQ
IR
HIGH SPEED SERIAL
CI I/F
REMOTE
TIMER
SERIAL
I2C
HDMI I/F
MAIN POWER CTRL
DDR POWER CTRL
ANALOG INPUT
COMMON I/O PORT & IRQ
COMMON I/O PORT
AUDIO PWM
SIF I/F
SIF-ADC REF (DMD)
VIDEO (SD) INPUT
VIDEO INPUT
V-ADC REF
VIDEO OUTPUT
V-DAC REF
AUDIO INPUT
AUDIO OUTPUT
A-ADC REF
TUNER I/F
SATA I/F
SATA MONITOR
SATA REF
LVDS I/F
LVDS REF
DDR3 CH0 I/F
DDR3 CH1 I/F
DDR3 CH1 REF
DDR POWER CTRL
CLK
USB/SATA CLK (reserve)
RESET
CLK SEL
TEST
DDR3 COMMON REF
DDR3 CH0 REF
STM POWER 3.3V
STM POWER 1.2V
MAIN POWER 1.2V
MAIN POWER 1.8V
MAIN POWER SD_CARD
MAIN POWER TCON
MAIN POWER 1.5V
MAIN POWER 3.3V
TOLERANT REFERENCE
VSS GND
99
98
97
96
95
94
93
92
91

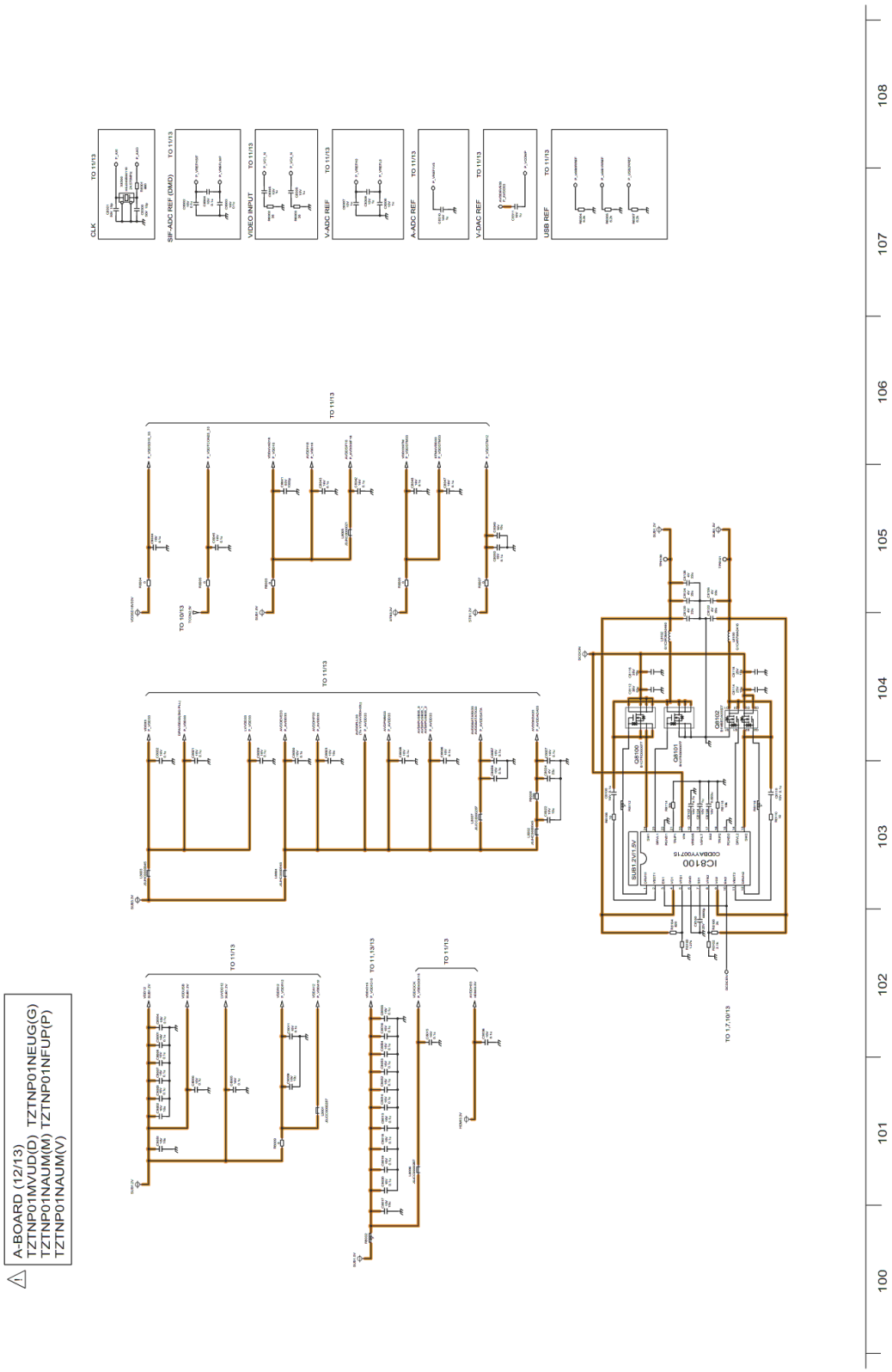
A-BOARD (12/13)
TZTNP01MVUD(D) TZTNP01NEUG(G)
TZTNP01NAUM(M) TZTNP01NFUP(P)
TZTNP01NAUM(V)
CLK
SIF-ADC REF (DMD)
VIDEO INPUT
V-ADC REF
A-ADC REF
V-DAC REF
USB REF
IC8100
Q8100
Q8101
Q8102
TO 11/13
TO 10/13
TO 1,7,10/13
100
101
102
103
104
105
106
107
108

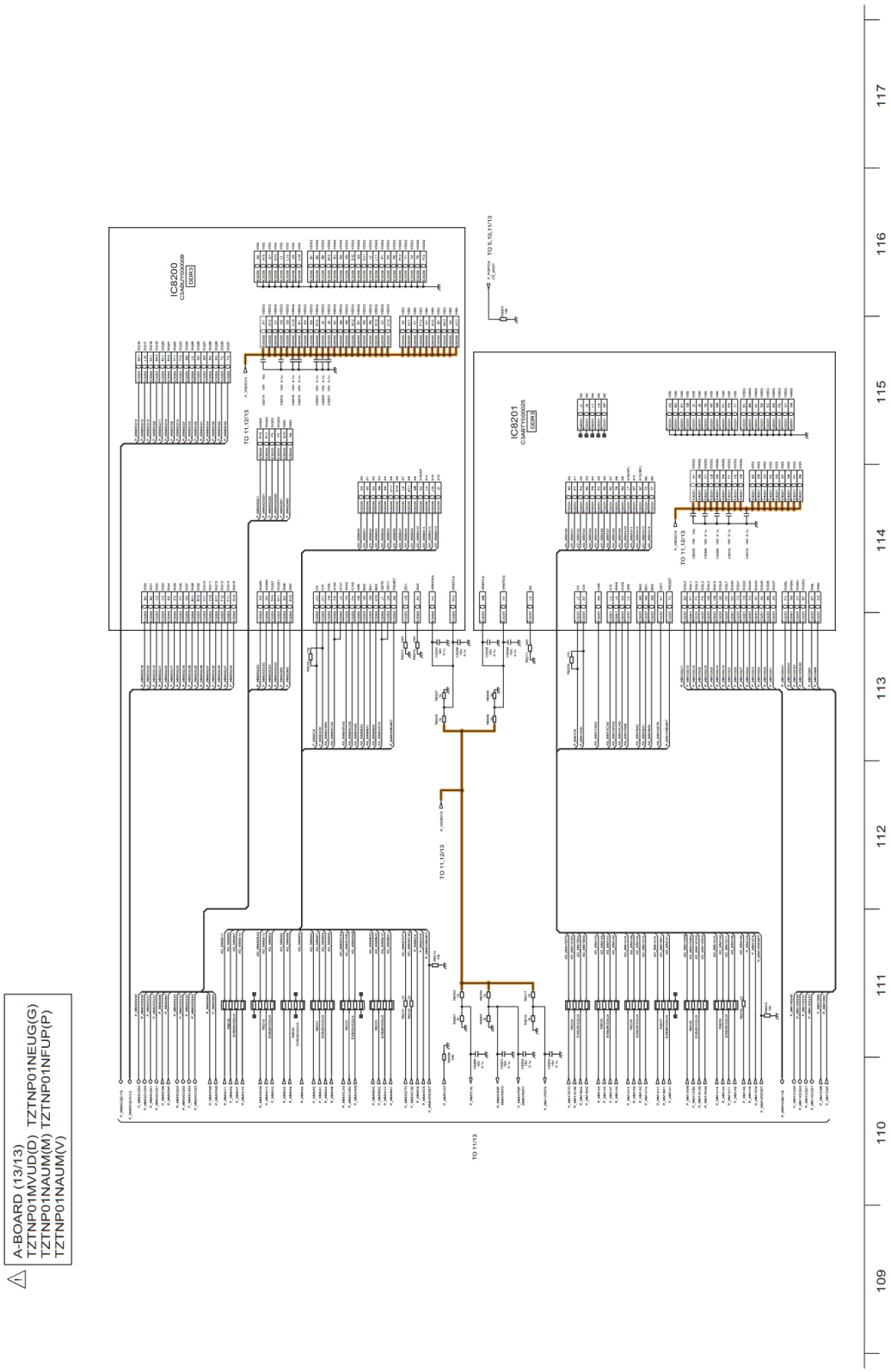
A-BOARD (13/13)
TZTNP01MVUD(D) TZTNP01NEUG(G)
TZTNP01NAUM(M) TZTNP01NFUP(P)
TZTNP01NAUM(V)
IC8200
IC8201
TO 11/13
TO 11,12/13
TO 5,10,11/13
109
110
111
112
113
114
115
116
117

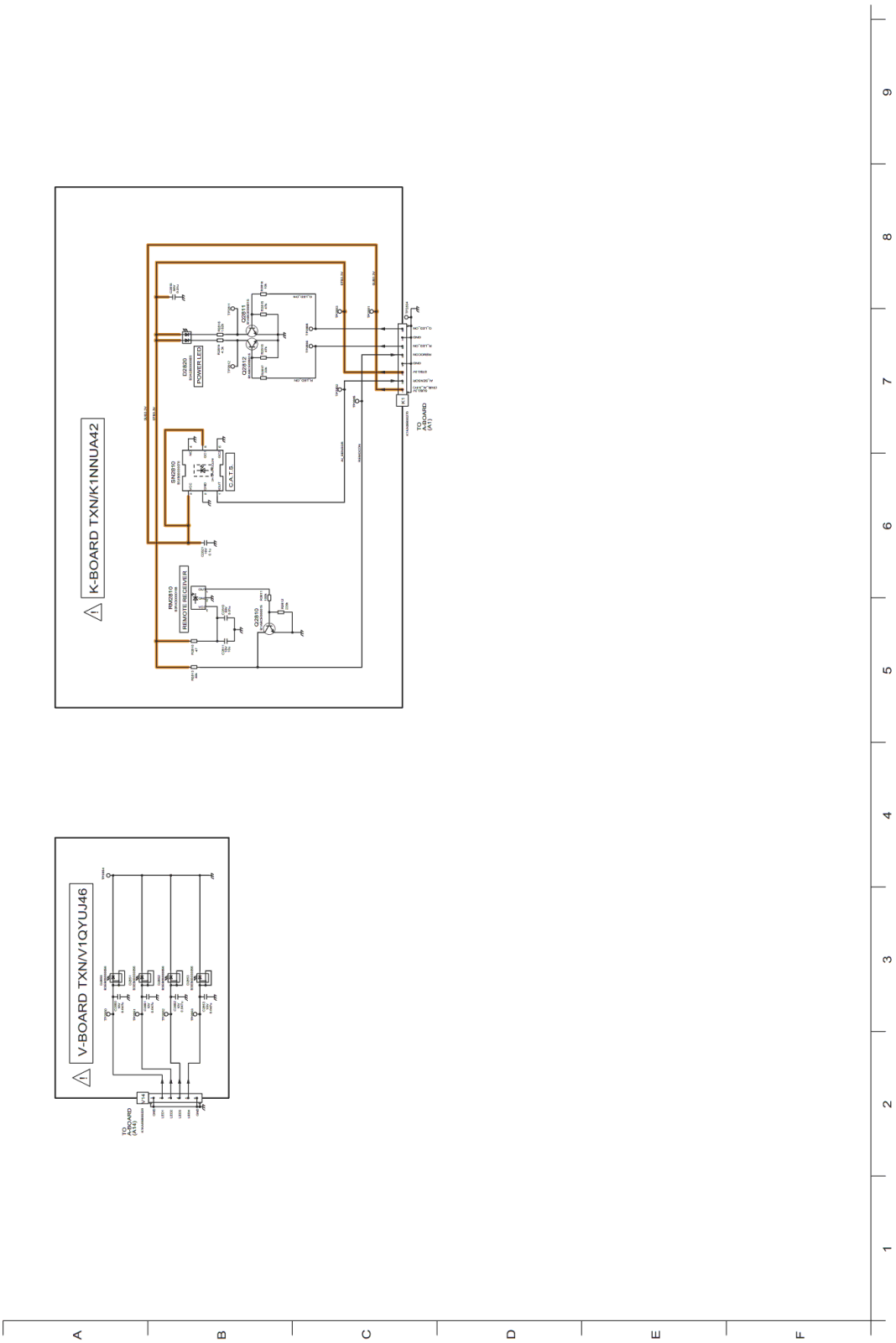
K-BOARD TXN/K1NNUA42
V-BOARD TXN/V1QYUJ46
POWER LED
REMOTE RECEIVER
GATE
TO A-BOARD (A1)
TO A-BOARD (A14)

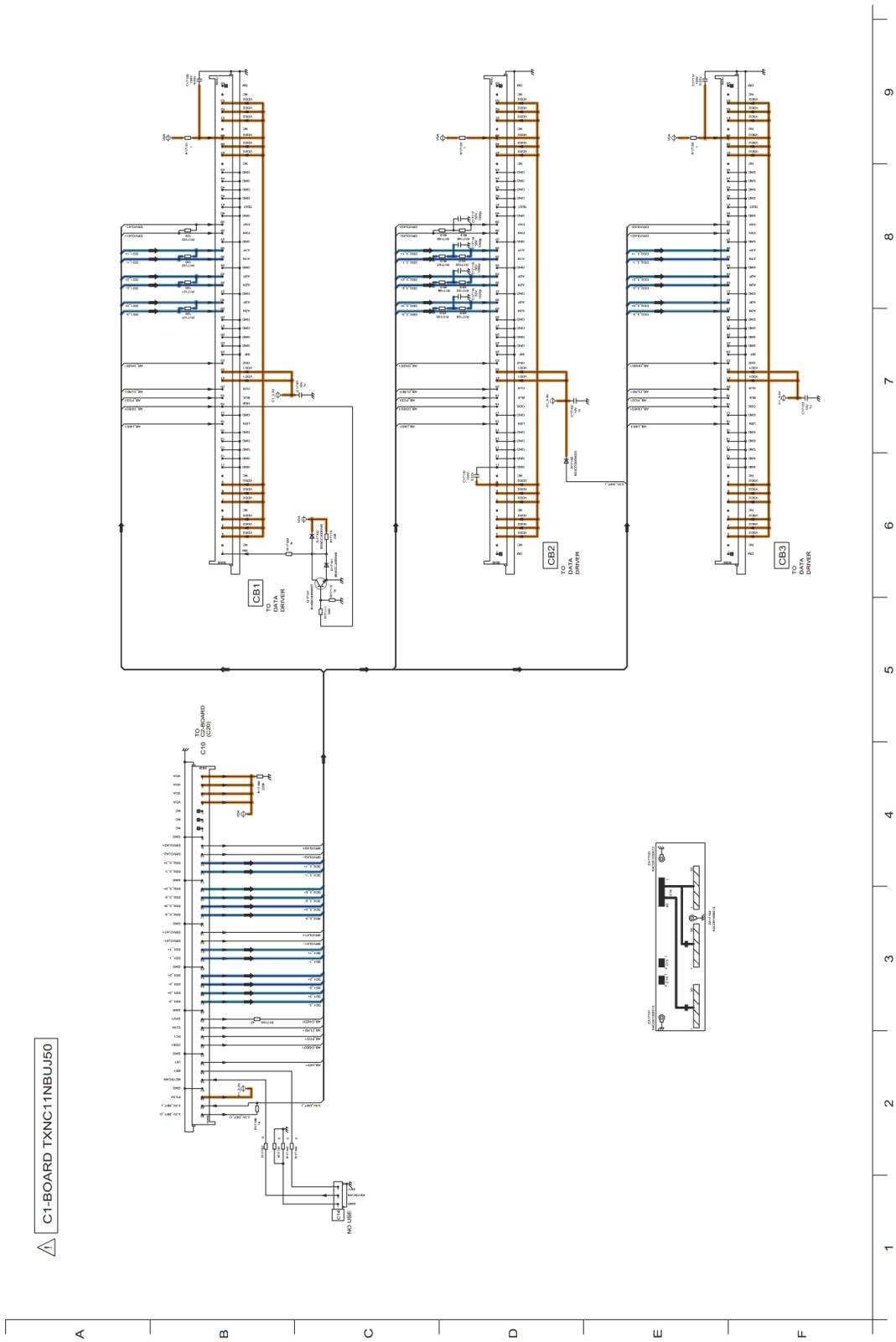
C1-BOARD TXNC11NBUJ50
CB1
TO DATA DRIVER
CB2
TO DATA DRIVER
CB3
TO DATA DRIVER
C10
TO C2-BOARD (C20)
NO USE

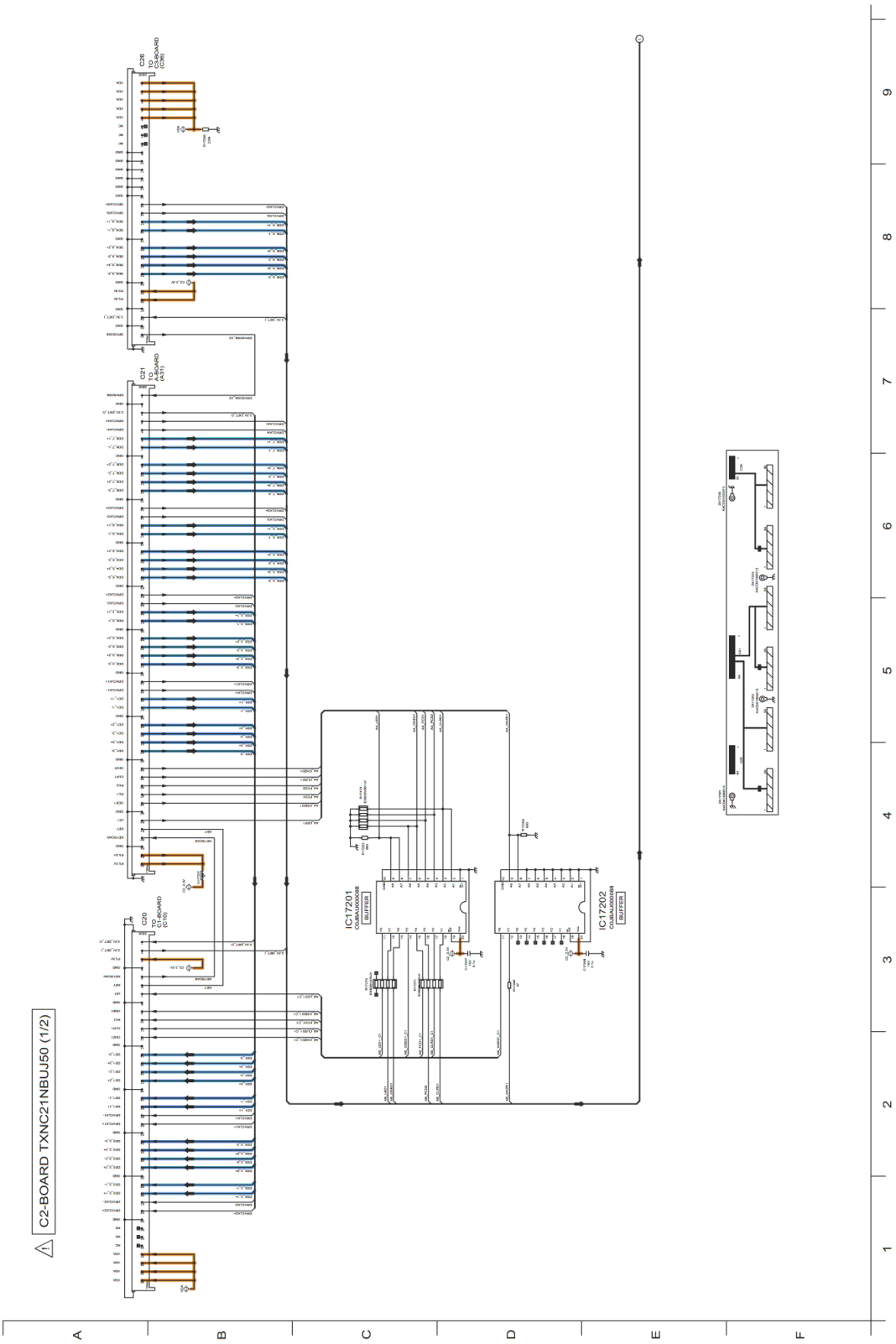
C2-BOARD TXNC21NBUJ50 (1/2)
C20
TO
C1-BOARD
(C10)
C21
TO
A3-BOARD
(A31)
C26
TO
C3-BOARD
(C36)
IC17201
C0JBAJ0000B8
BUFFER
IC17202
C0JBAJ0000B8
BUFFER
A
B
C
D
E
F
1
2
3
4
5
6
7
8
9

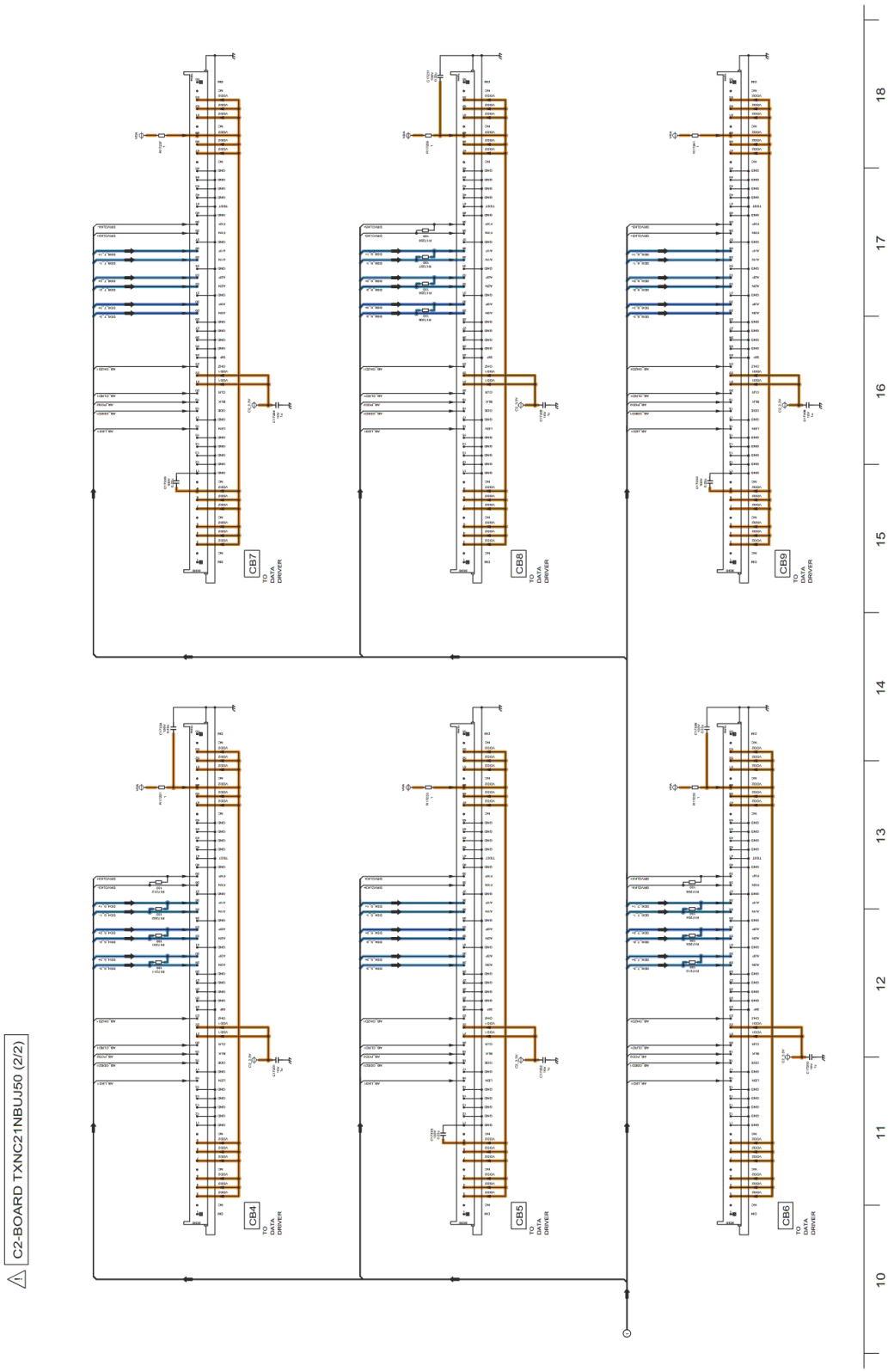
C2-BOARD TXNC21NBUJ50 (2/2)
CB4
TO DATA DRIVER
CB5
TO DATA DRIVER
CB6
TO DATA DRIVER
CB7
TO DATA DRIVER
CB8
TO DATA DRIVER
CB9
TO DATA DRIVER
10
11
12
13
14
15
16
17
18

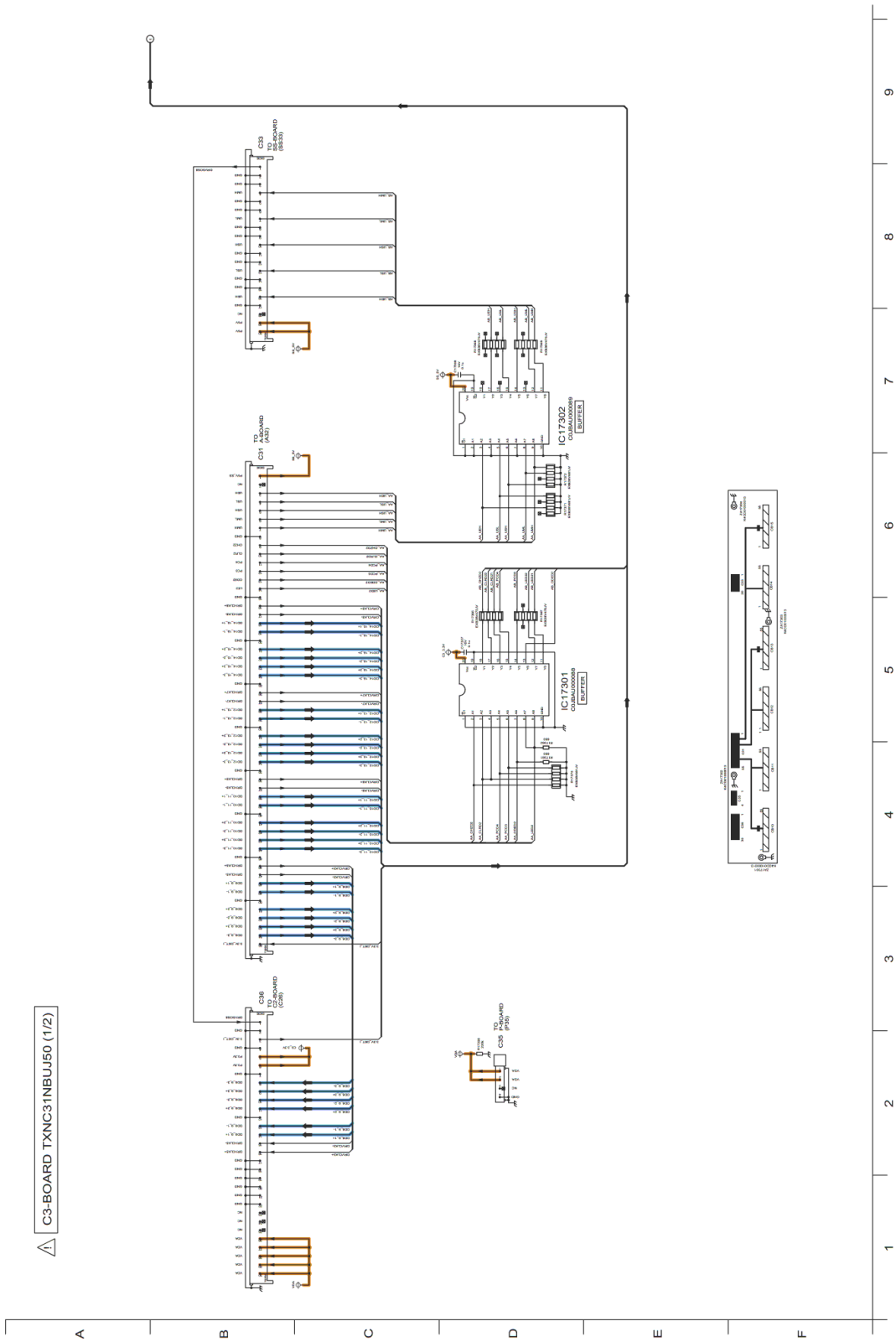
C3-BOARD TXNC31NBUJ50 (1/2)
C33
TO
C2-BOARD
(S633)
C31
TO
A-BOARD
(A52)
C36
TO
C2-BOARD
(C26)
C35
TO
P-BOARD
(P35)
IC17302
CU8AUD0009
BUFFER
IC17301
CU8AUD0009
BUFFER

C3-BOARD TXNC31NBUJ50 (2/2)
CB10
TO DATA DRIVER
CB11
TO DATA DRIVER
CB12
TO DATA DRIVER
CB13
TO DATA DRIVER
CB14
TO DATA DRIVER
CB15
TO DATA DRIVER
10
11
12
13
14
15
16
17
18

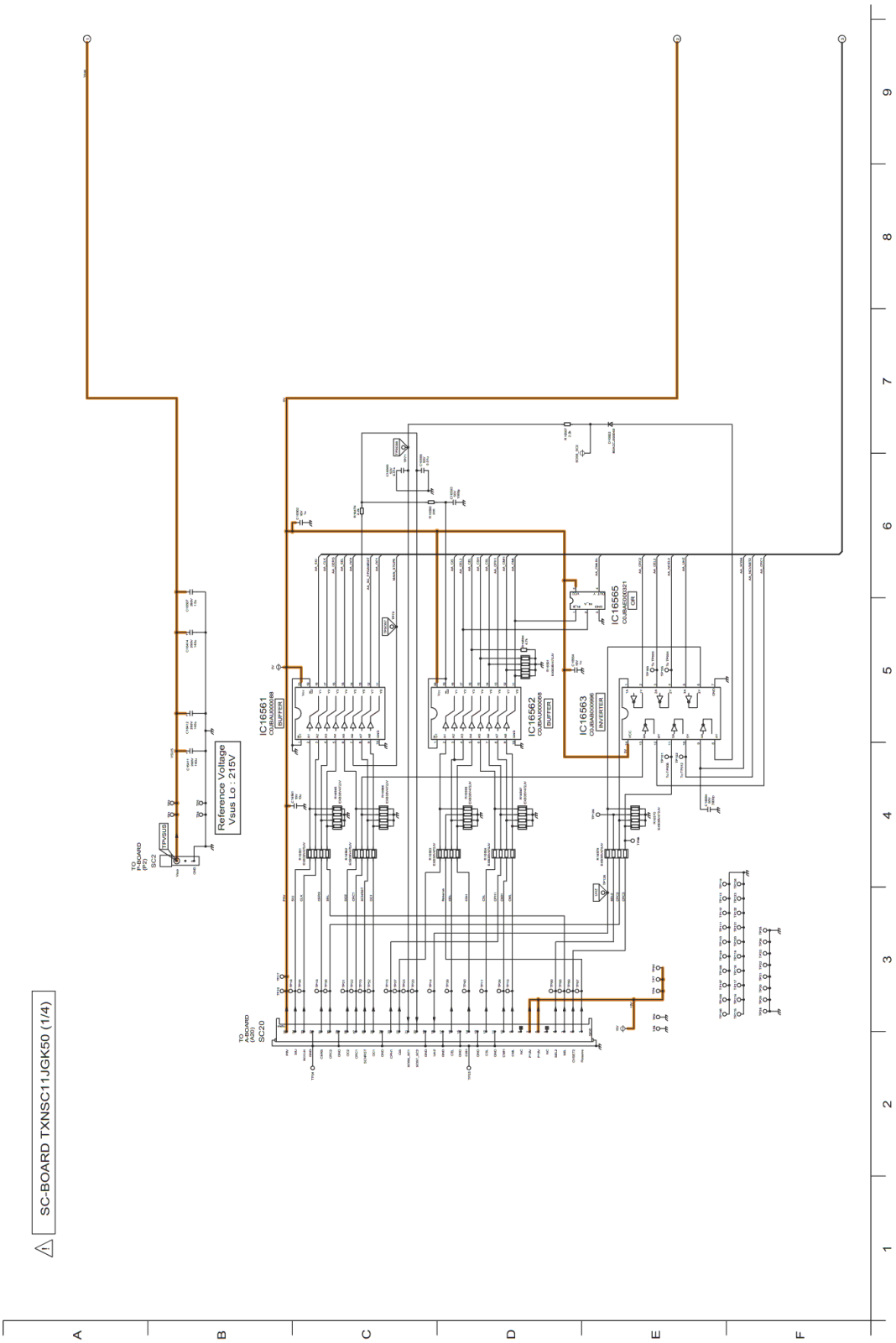
SC-BOARD TXNSC11JGK50 (1/4)
Reference Voltage
Vsus Lo : 215V
TO PSU BOARD (PSU) SC2
TO A-BOARD (A-BOARD) SC20
IC16561
IC16562
IC16563
IC16565
BUFFER
INVERTER
OR

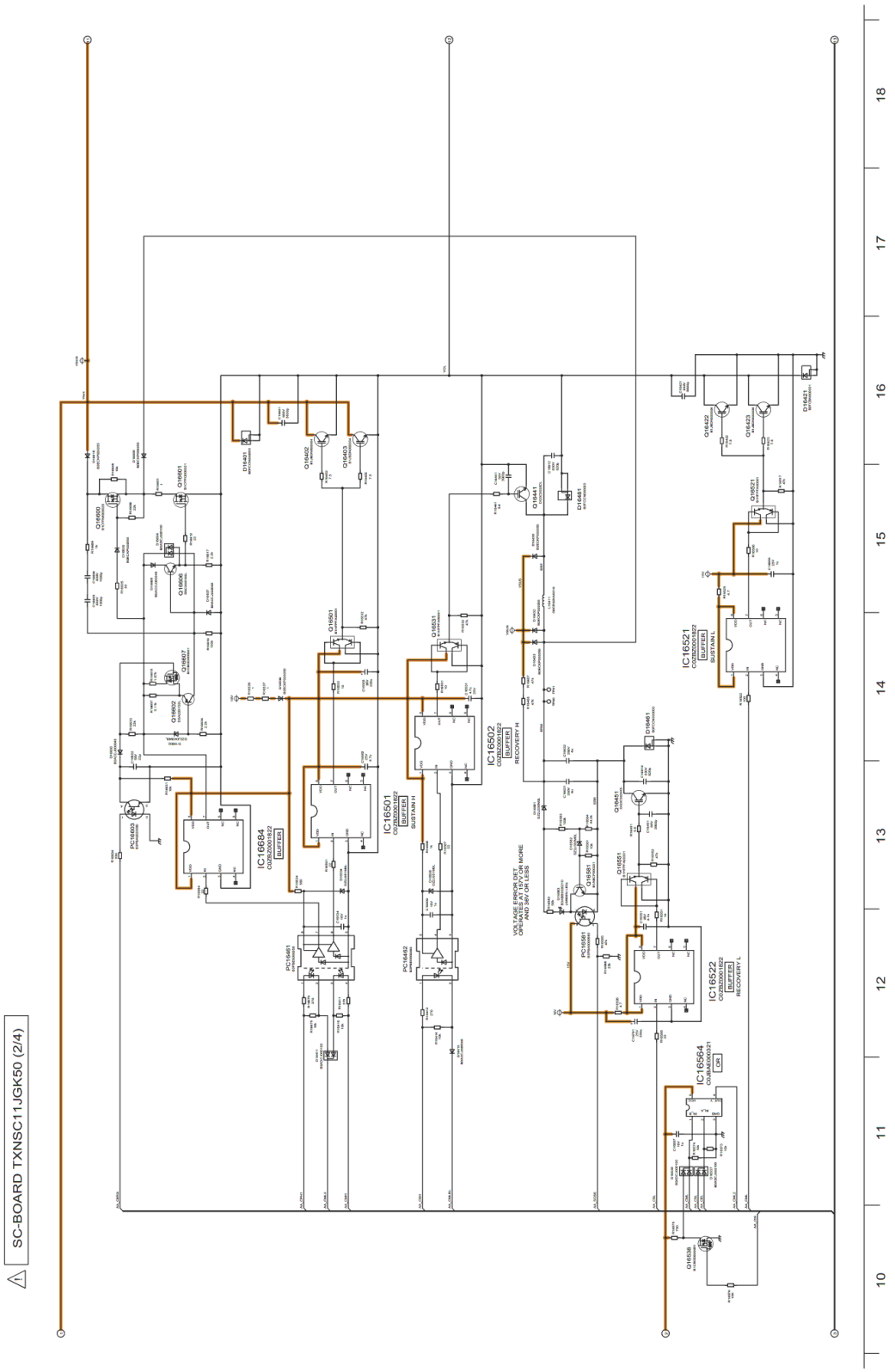
SC-BOARD TXNSC11JGK50 (2/4)
IC16684
IC16501
IC16502
IC16521
IC16522
IC16564
VOLTAGE ERROR DET
OPEN:18.5V OR MORE
AND 3.6V OR LESS
10
11
12
13
14
15
16
17
18

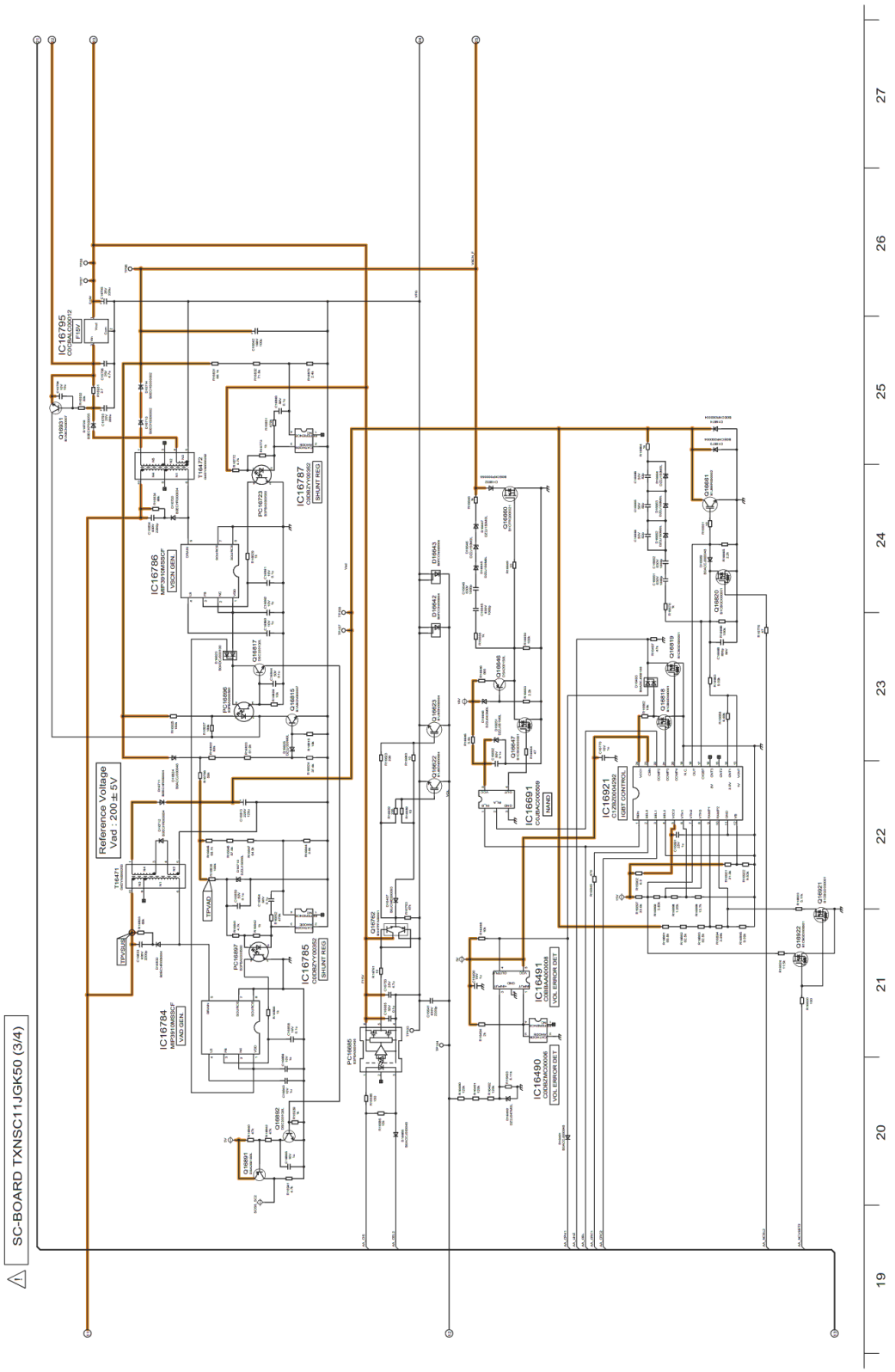
SC-BOARD TXNSC11JGK50 (3/4)
Reference Voltage
Vad : 200 ± 5V
IC16795
IC16787
IC16786
IC16785
IC16784
IC16691
IC16921
IC16491
IC16490
SHUNT REG
LIGHT CONTROL
VOL ERROR DET
19
20
21
22
23
24
25
26
27

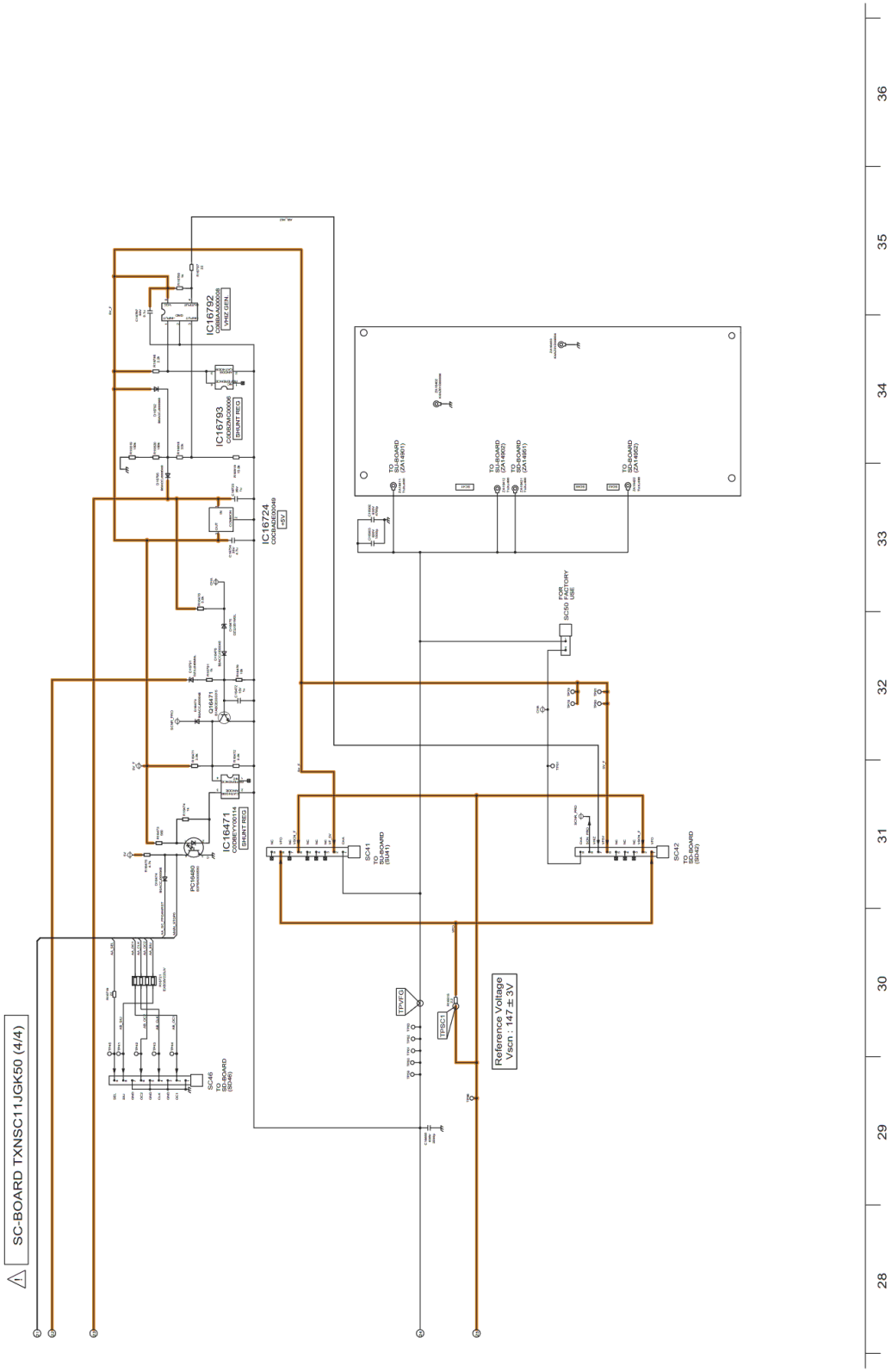
SC-BOARD TXNSC11JGK50 (4/4)
IC16792
CXBB0AC00008
CHRG GEN.
IC16793
CXBB0AC00006
SHUNT REG
IC16724
CXCBAZE00049
+5V
IC16471
CXBB0TY00114
SHUNT REG
PC16480
SC46
TO
SD-BOARD
(SE45)
SC41
TO
SU-BOARD
(SE41)
SC42
TO
SD-BOARD
(SE42)
SC50
FOR
FACTORY
USE
TP4VCC
TP3SC1
Reference Voltage
Vscn : 147 ± 3V
TO
SU-BOARD
(ZA14651)
TO
SU-BOARD
(ZA14652)
TO
SD-BOARD
(ZA14651)
TO
SD-BOARD
(ZA14652)
36
35
34
33
32
31
30
29
28

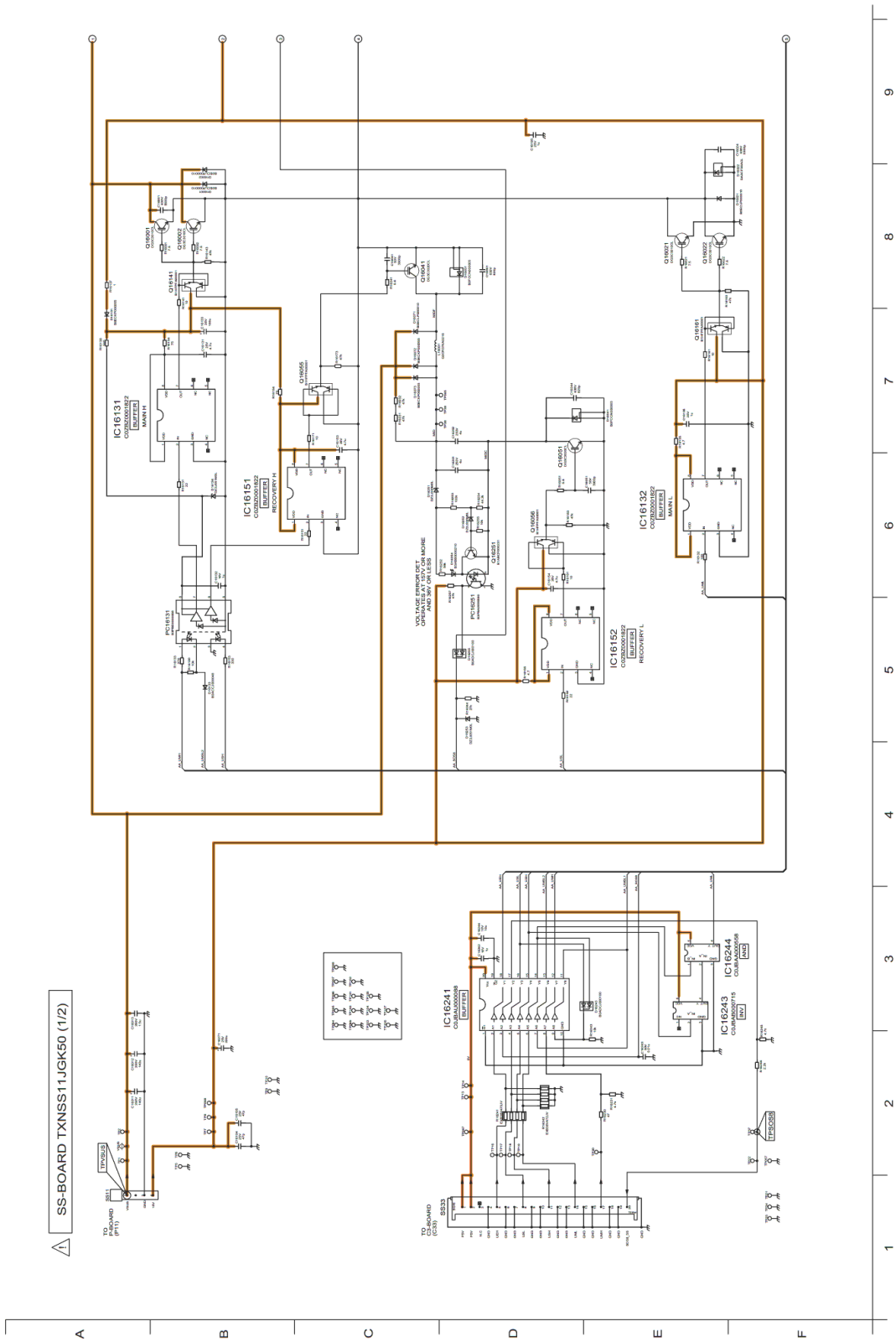
SS-BOARD TXNSS11JGK50 (1/2)
IC16131
IC16151
IC16132
IC16152
IC16241
IC16243
IC16244
VOLTAGE ERROR DET
OPERATES AT 15V OR MORE
TO (MOARD (P11)
TO (SOARD (C33)
SS33
TPRGS8
TPRGS9

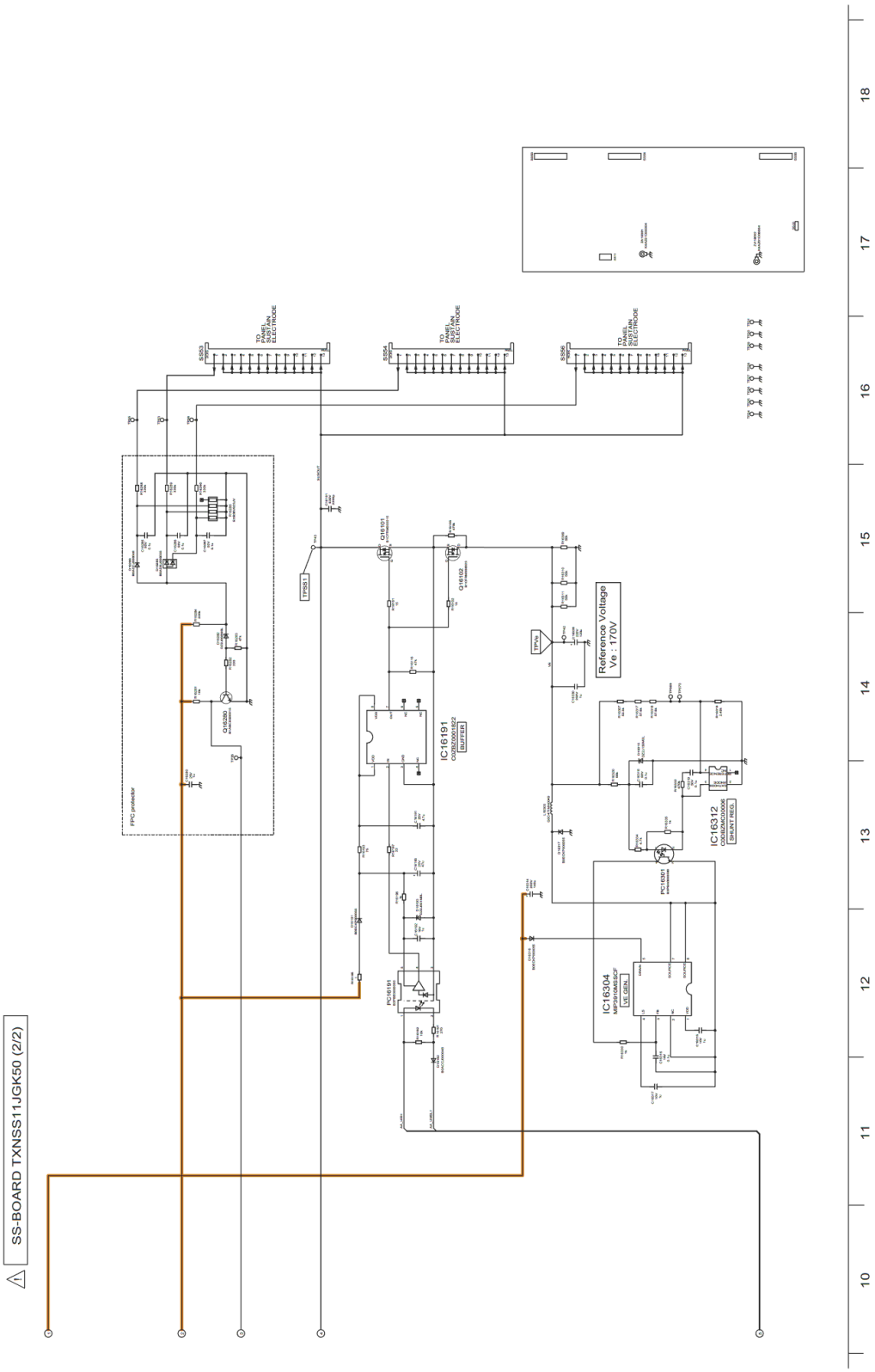
SS-BOARD TXNSS11JGK50 (2/2)
FPC-protector
Q16200
Q16101
Q16102
IC16191
BUFFER
PC16191
IC16304
IC16312
SHUNT REG
PC16301
Reference Voltage
Vs : 170V
TP51
TP52
SS53
SS54
SS56
10
11
12
13
14
15
16
17
18

Model No. : TH-P50UT30D/G/M/P/V A-Board (Foil side)

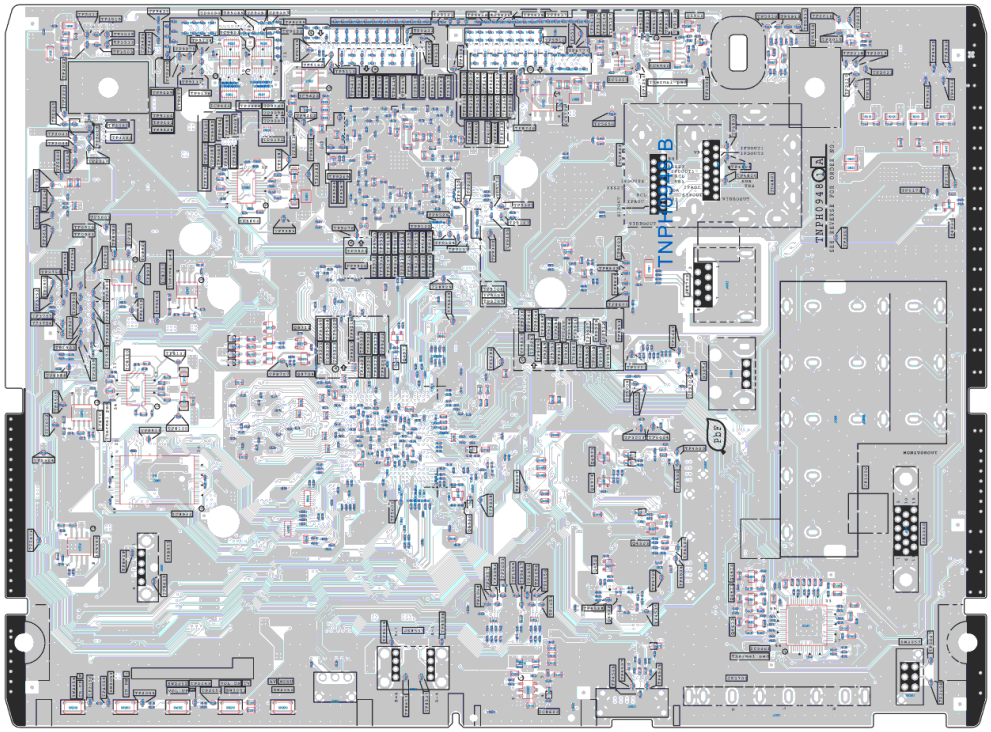

Model No. : TH-P50UT30D/G/M/P/V A-Board (Component side)

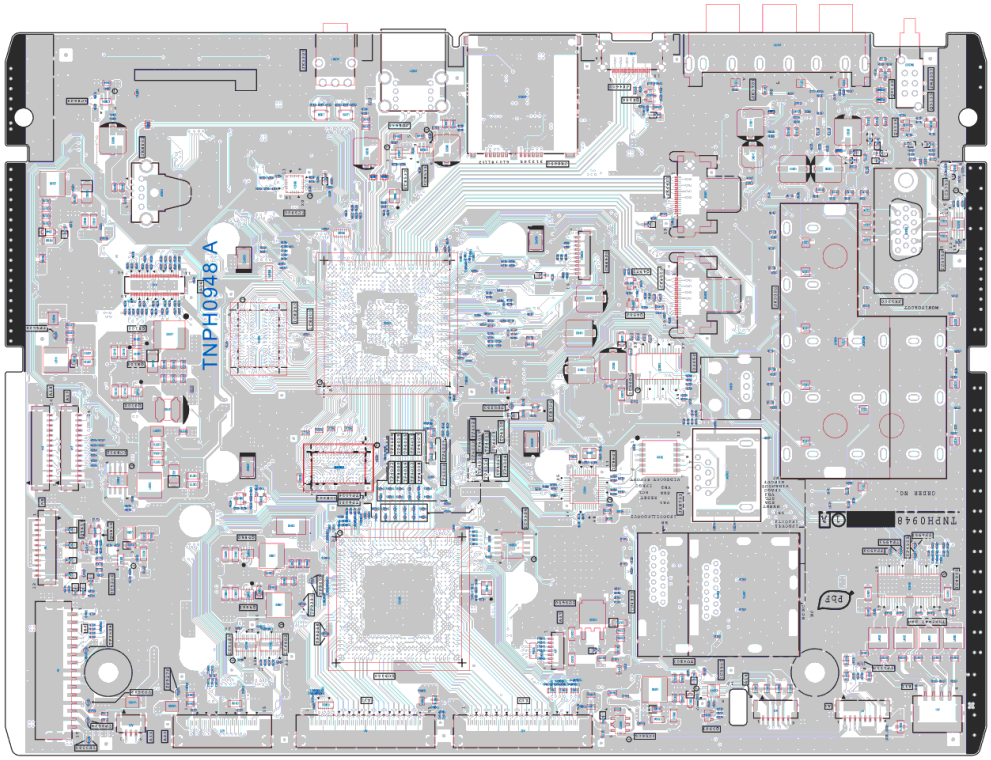

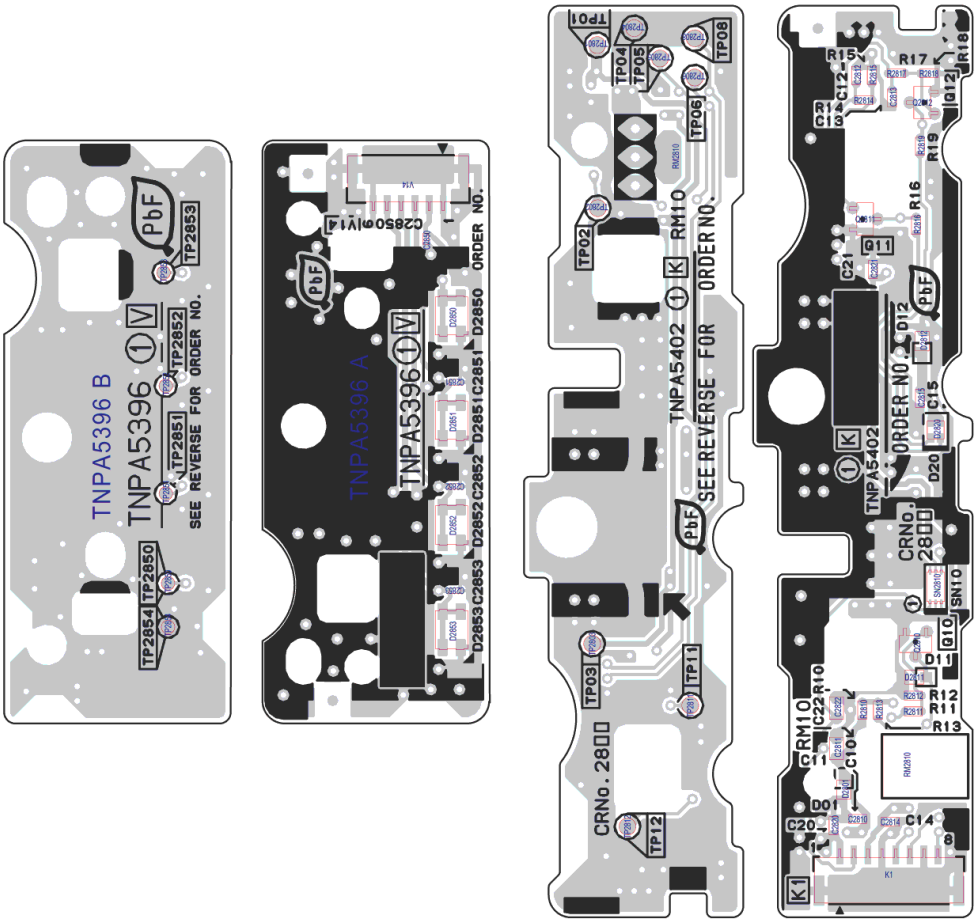
TNPA5396 B
TNPA5396
SEE REVERSE FOR ORDER NO.
TP2854
TP2850
TP2851
TP2852
TP2853
PbF
TNPA5396 A
TNPA5396
C2850
D2850
D2851
D2852
D2853
C2851
C2852
C2853
ORDER NO.
TP01
TP02
TP03
TP04
TP05
TP06
TP08
TP11
TP12
RM10
TNPA5402
SEE REVERSE FOR ORDER NO.
CRNo. 28□□
R15
R17
R18
R19
R16
C12
Q11
Q12
C21
C15
D20
ORDER NO.
CRNo. 28□□
SN10
Q10
D11
R12
R11
R13
GRM10
C22
R10
C10
D01
C20
C14
K1

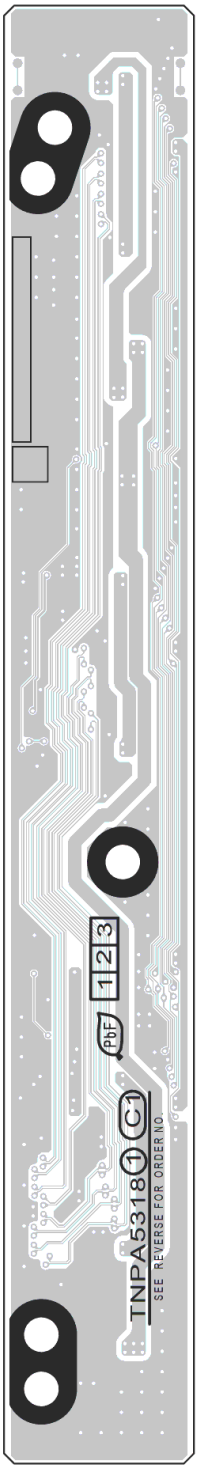
TNPA5318
SEE REVERSE FOR ORDER NO
C1
PbF
1 2 3

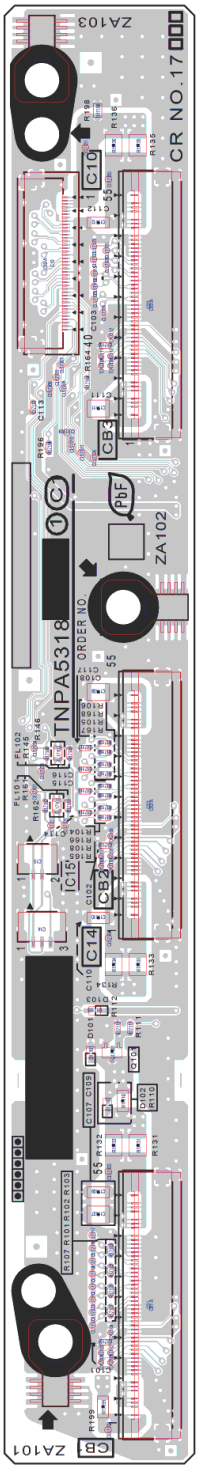
ZA101
CB
C14
IC15
CB2
TNPA5318
ORDER NO
C
PbF
ZA102
CB3
C10
CR NO.17
ZA103

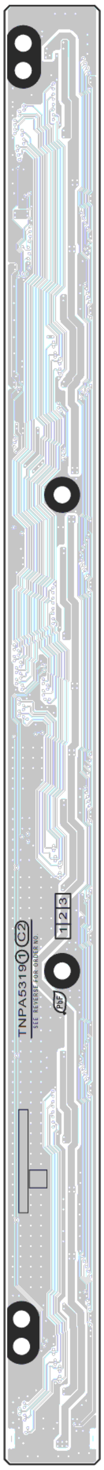
TNPA5319 1 C2
SEE REVERSE FOR ORDER NO.
1 2 3
PbF

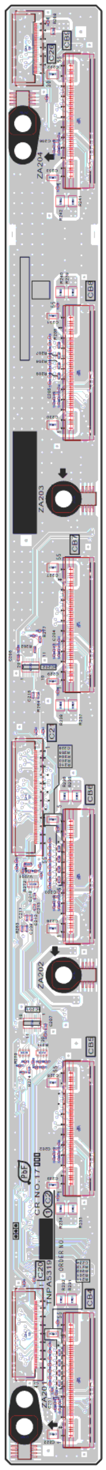
ZA204
ZA203
ZA202
ZA201
C26
CB9
CB8
CB7
CB6
CB5
CB4
C2
C20
CR NO.17
PbF
TNPA5319
ORDER NO

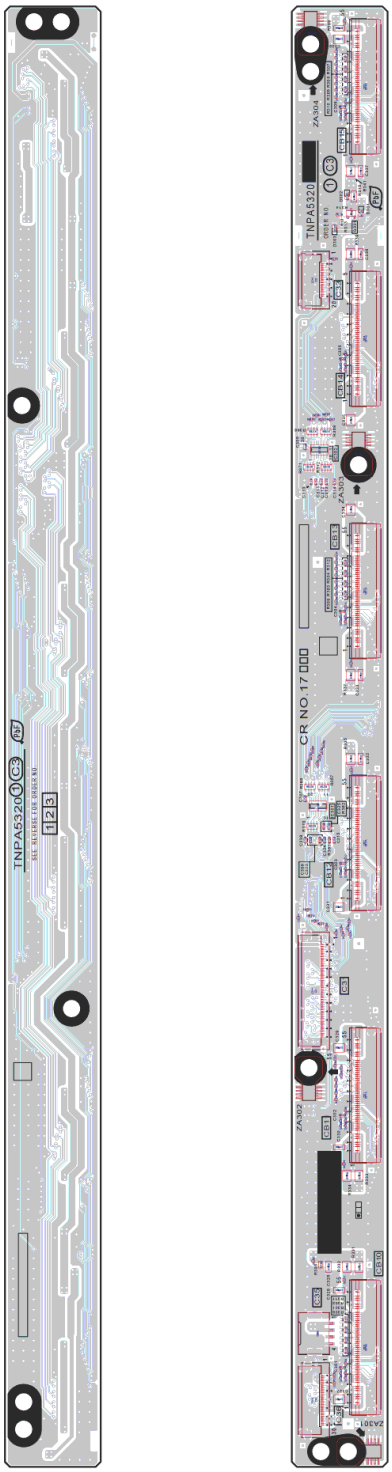
TNPA5320
CR NO.17 000

Model No. : TH-P50UT30D/G/M/P/V SC-Board (Foil side)

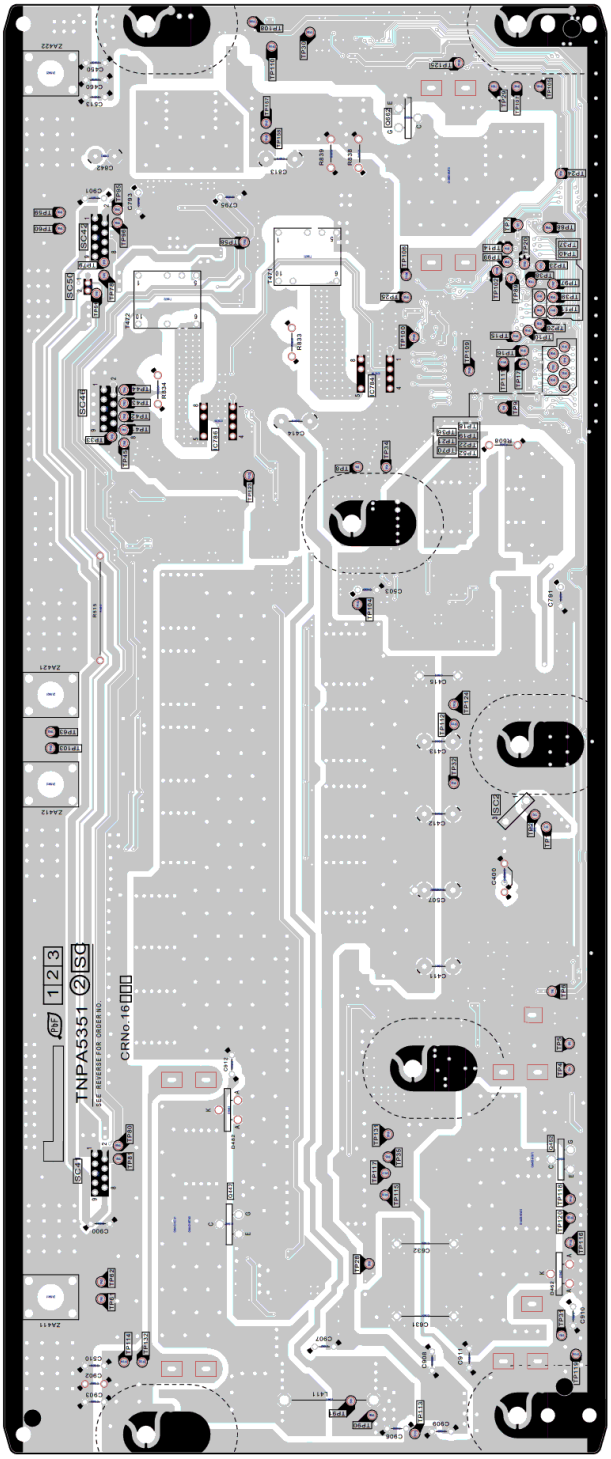

Model No. : TH-P50UT30D/G/M/P/V SC-Board (Component side)

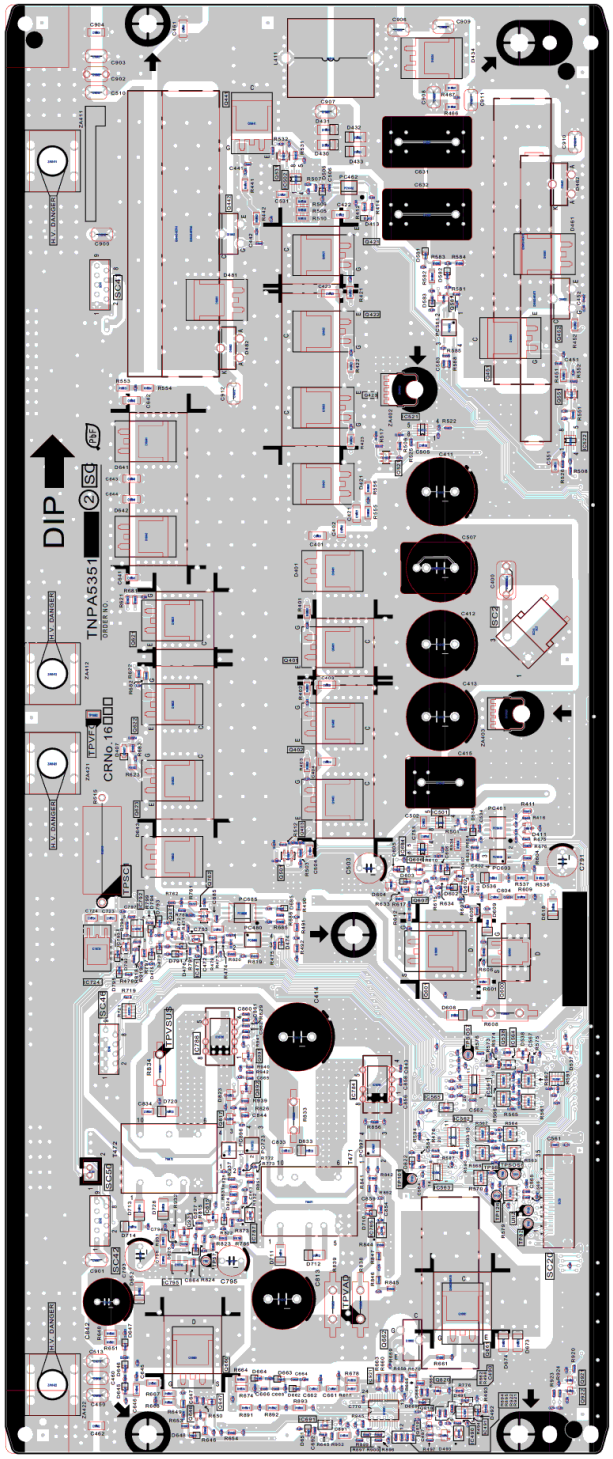

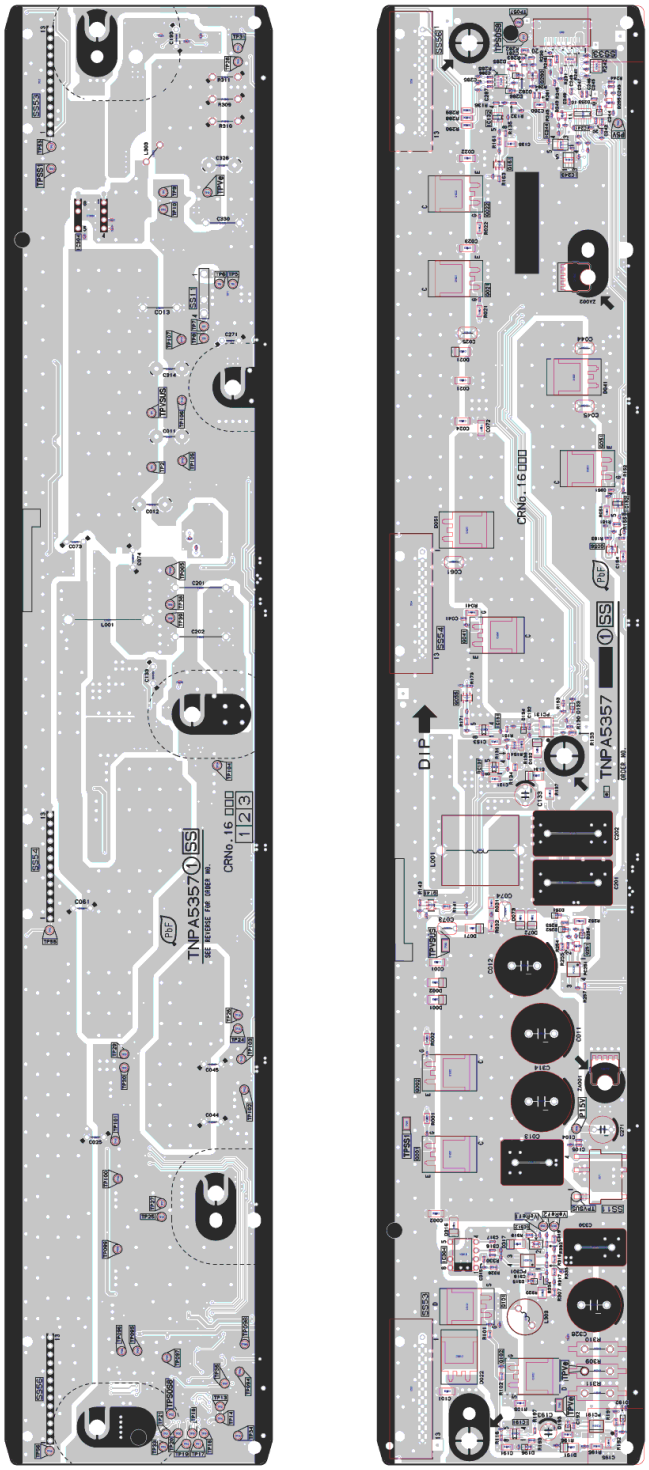
TNPA5357
CRNo.16
DIP

Model No. : TH-P50UT30D/G/M/P/V Parts List

Safety	Ref. No.	Part No.	Part Name & Description	Q'ty	Remarks
⚠	PCB	TZTNP01MVUD	A-PRINT COMPLETE	1	(D) (RTL)PAVCTH
⚠	PCB	TZTNP01NEUG	A-PRINT COMPLETE	1	(G) (RTL)PAVCTH
⚠	PCB	TZTNP01NAUM	A-PRINT COMPLETE	1	(M) (V) (RTL)PAVCTH
⚠	PCB	TZTNP01NFUP	A-PRINT COMPLETE	1	(P) (RTL)PAVCTH
⚠	PCB	N0AE6KK00009	POWER SUPPLY UNIT	1	PAVCTH
⚠	PCB	TXNC11NBUJ50	C1-PRINT COMPLETE	1	(RTL)PAVCTH
⚠	PCB	TXNC21NBUJ50	C2-PRINT COMPLETE	1	(RTL)PAVCTH
⚠	PCB	TXNC31NBUJ50	C3-PRINT COMPLETE	1	(RTL)PAVCTH
⚠	PCB	TXNSC11JGK50	SC-PRINT COMPLETE	1	(RTL)PAVCTH
⚠	PCB	TXNSD11JGK50	SD-PRINT COMPLETE	1	PAVCTH
⚠	PCB	TXNSS11JGK50	SS-PRINT COMPLETE	1	(RTL)PAVCTH
⚠	PCB	TXNSU11JGK50	SU-PRINT COMPLETE	1	PAVCTH
⚠	PCB	TXN/K1NNUA42	K-PRINT COMPLETE	1	(RTL)PAVCTH
⚠	PCB	TXN/V1QYUJ46	V-PRINT COMPLETE	1	(RTL)PAVCTH
	A1	K1KY08AA0719	8P CONNECTOR	1	
	A6	K1KY15B00006	15P CONNECTOR	1	
	A11	K1KY04B00013	4P CONNECTOR	1	
	A14	K1KY06AA0719	6P CONNECTOR	1	
	A17	K1KA14A00248	14P CONNECTOR	1	
	A20	K1MY35BA0345	35P CONNECTOR	1	
	A31	K1MY55BA0345	55P CONNECTOR	1	
	A32	K1MY55BA0345	55P CONNECTOR	1	
	A35	K1KY03AA0719	3P CONNECTOR	1	
	C10	K1MY40BA0345	40P CONNECTOR	1	
	C14	K1KY03AA0719	3P CONNECTOR	1	
	C20	K1MY40BA0345	40P CONNECTOR	1	
	C21	K1MY55BA0345	55P CONNECTOR	1	
	C26	K1MY30BA0345	30P CONNECTOR	1	
	C31	K1MY55BA0345	55P CONNECTOR	1	
	C33	K1MY20BA0345	20P CONNECTOR	1	
	C35	K1KY04B00013	4P CONNECTOR	1	
	C36	K1MY30BA0345	30P CONNECTOR	1	
	C1052	F1G1A105A047	C 1UF 10V	1	
	C1053	F1G1C104A077	C 0.1UF 16V	1	
	C1090	F1G1H1020008	C 1000PF 50V	1	
	C1091	F1G1H1020008	C 1000PF 50V	1	
	C1092	F1G1H1020008	C 1000PF 50V	1	
	C1093	F1G1H1020008	C 1000PF 50V	1	
	C1105	F1G1E1030005	C 0.01UF 25V	1	
	C2050	F1J1H102A721	C 1000pF, 50V	1	
	C2810	ECJ1VB1H103K	C 0.01UF, 50V	1	
	C2811	F1J1A106A087	C 10UF, 10V	1	
	C2815	ECJ1VB1H103K	C 0.01UF, 50V	1	
	C2821	ECJ1XB1C104K	C 0.1UF, Z, 16V	1	
	C2850	F1H1C473A041	C 0.047UF. 16V	1	
	C2851	F1H1C473A041	C 0.047UF. 16V	1	
	C2852	F1H1C473A041	C 0.047UF. 16V	1	
	C2853	F1H1C473A041	C 0.047UF. 16V	1	
	C3001	F2G1A2210024	E 220UF, 10V	1	
	C3005	F1J1A106A043	C 10UF, 10V	1	
	C3006	F1J1A106A043	C 10UF, 10V	1	
	C3007	F1J1A106A043	C 10UF, 10V	1	
	C3011	F1G1C104A077	C 0.1UF 16V	1	
	C3023	F1J1A106A043	C 10UF, 10V	1	
	C3026	F1J1A106A043	C 10UF, 10V	1	
	C3028	F1J1A106A043	C 10UF, 10V	1	
	C3033	F1J1A106A043	C 10UF, 10V	1	
	C3034	F1J1A106A043	C 10UF, 10V	1	
	C3035	F1G1C104A077	C 0.1UF 16V	1	
	C3036	ECJ1VB1A105K	C 1UF, 10V	1	

Safety	Ref. No.	Part No.	Part Name & Description	Q'ty	Remarks
	C3037	ECJ1VB1A105K	C 1UF, 10V	1	
	C3038	ECJ1VB1A105K	C 1UF, 10V	1	
	C3039	ECJ1VB1A105K	C 1UF, 10V	1	
	C3045	ECJ1VB1A105K	C 1UF, 10V	1	
	C3046	ECJ1VB1A105K	C 1UF, 10V	1	
	C3047	F1J1A106A043	C 10UF, 10V	1	
	C3048	ECJ1VB1A105K	C 1UF, 10V	1	
	C3049	ECJ1VB1A105K	C 1UF, 10V	1	
	C3053	F1J1A106A043	C 10UF, 10V	1	
	C3054	F1G1C104A077	C 0.1UF 16V	1	
	C3065	F1G1H5610004	C 560 pF 50 V	1	
	C3066	F1G1H5610004	C 560 pF 50 V	1	
	C3067	F1G1E333A091	C 0.033UF 25V	1	
	C3068	F1G1E333A091	C 0.033UF 25V	1	
	C3130	F1G1H5610004	C 560 pF 50 V	1	
	C3131	F1G1H5610004	C 560 pF 50 V	1	
	C3134	F1G1H5610004	C 560 pF 50 V	1	
	C3135	F1G1H5610004	C 560 pF 50 V	1	
	C3157	F1G1C104A077	C 0.1UF 16V	1	
	C3301	F1J1A106A043	C 10UF, 10V	1	
	C3302	F1J1A106A043	C 10UF, 10V	1	
	C3303	F1J1A106A043	C 10UF, 10V	1	
	C3750	F1G1C104A077	C 0.1UF 16V	1	
	C4500	ECJ1VB1A105K	C 1UF, 10V	1	
	C4505	ECJ1VB1A105K	C 1UF, 10V	1	
	C4619	ECJ1VB1A105K	C 1UF, 10V	1	
	C4622	ECJ1VB1A105K	C 1UF, 10V	1	
	C4625	ECJ1VB1A105K	C 1UF, 10V	1	
	C4802	F1J1A106A043	C 10UF, 10V	1	
	C4804	F1J1A106A043	C 10UF, 10V	1	
	C4805	F1G1H220A565	C 22PF, 50V	1	(G)
	C4806	F1G1C104A077	C 0.1UF 16V	1	(G)
	C4810	F1G1A105A047	C 1UF 10V	1	
	C4811	F1G1A105A047	C 1UF 10V	1	
	C4812	F1G1C104A077	C 0.1UF 16V	1	
	C4813	F1J1A106A043	C 10UF, 10V	1	
	C4816	F1G1C104A077	C 0.1UF 16V	1	(G)
	C4817	F1G1C104A077	C 0.1UF 16V	1	(G)
	C4820	F1G1H101A565	C 100PF 50V	1	
	C4821	F1G1H101A565	C 100PF 50V	1	
	C4823	F1J1A106A043	C 10UF, 10V	1	
	C4824	F1G1H150A565	C 15PF, 50V	1	
	C4830	F1G1H101A565	C 100PF 50V	1	(G)
	C4831	F1G1H101A565	C 100PF 50V	1	(G)
	C4834	F1H1H102A970	C 1000PF, 50V	1	
	C4835	F1H1H1500009	C 15PF, 50V	1	
	C4836	F1J1A106A043	C 10UF, 10V	1	
	C4838	F1G1C104A077	C 0.1UF 16V	1	
	C4839	F1G1C104A077	C 0.1UF 16V	1	
	C4840	F1G1C104A077	C 0.1UF 16V	1	
	C4910	F1G1H1020008	C 1000PF 50V	1	
	C4911	F1J1E105A231	C 1 UF 25V	1	
	C4912	F1K1E106A136	C 10UF, 25V	1	
	C4913	F1K1E106A136	C 10UF, 25V	1	
	C4914	F1H1H104A970	C 0.1UF, , 50V	1	
	C4915	F1J1E105A231	C 1 UF 25V	1	
	C4916	F1H1H104A970	C 0.1UF, , 50V	1	
	C4918	F1J1E4740001	C 0.47UF, 25V	1	
	C4919	F1J1E4740001	C 0.47UF, 25V	1	
	C4920	F1G1H1020008	C 1000PF 50V	1	
	C4921	F1J1E105A231	C 1 UF 25V	1	
	C4922	F1K1E106A136	C 10UF, 25V	1	

Safety	Ref. No.	Part No.	Part Name & Description	Q'ty	Remarks
	C4923	F1K1E106A136	C 10UF, 25V	1	
	C4924	F1H1H104A970	C 0.1UF, , 50V	1	
	C4925	F1J1E105A231	C 1 UF 25V	1	
	C4926	F1H1H104A970	C 0.1UF, , 50V	1	
	C4928	F1J1E4740001	C 0.47UF, 25V	1	
	C4929	F1J1E4740001	C 0.47UF, 25V	1	
	C4930	F1G1C104A077	C 0.1UF 16V	1	
	C4931	F1G1C104A077	C 0.1UF 16V	1	
	C4941	F1J1A106A043	C 10UF, 10V	1	
	C4942	F1J1A106A043	C 10UF, 10V	1	
	C4952	F2H1A101A040	C 100UF, 10V	1	
	C4953	F2H1A101A040	C 100UF, 10V	1	
	C4954	F1G1E333A091	C 0.033UF 25V	1	
	C4955	F1G1E333A091	C 0.033UF 25V	1	
	C5000	F1G1E1030005	C 0.01UF 25V	1	
	C5002	F1J1E105A231	C 1 UF 25V	1	
	C5003	F1H1C105A145	C 1 uF 16 V	1	
	C5007	F1G1C104A077	C 0.1UF 16V	1	
	C5009	F1G1C104A077	C 0.1UF 16V	1	
	C5011	F1G1C104A077	C 0.1UF 16V	1	
	C5012	EEEHB1C101UP	C 100PF, J, 16V	1	
	C5013	ECJ1VB1A105K	C 1UF, 10V	1	
	C5014	ECJ1VB1A105K	C 1UF, 10V	1	
	C5015	ECJ1VB1A105K	C 1UF, 10V	1	
	C5016	ECJ1VB1A105K	C 1UF, 10V	1	
	C5017	ECJ1VB1A105K	C 1UF, 10V	1	
	C5018	F1G1C104A077	C 0.1UF 16V	1	
	C5020	F1G1E1030005	C 0.01UF 25V	1	
	C5022	F1G1H1020008	C 1000PF 50V	1	
	C5024	F1G1H1020008	C 1000PF 50V	1	
	C5255	ECJ1VB1A105K	C 1UF, 10V	1	
	C5256	ECJ1VB1A105K	C 1UF, 10V	1	
	C5352	F1J1A106A043	C 10UF, 10V	1	
	C5353	F1G1H103A509	C 0.01PF, 50V	1	
	C5356	F1K1E106A136	C 10UF, 25V	1	
	C5357	F1K1E106A136	C 10UF, 25V	1	
	C5358	F1J1A106A043	C 10UF, 10V	1	
	C5359	F1G1H821A459	C 820 pF 50 V	1	
	C5371	F1J1A106A043	C 10UF, 10V	1	
	C5900	F1J1A106A043	C 10UF, 10V	1	
	C5901	F1J1A106A043	C 10UF, 10V	1	
	C5902	F1J1A106A043	C 10UF, 10V	1	
	C5905	F1G1C223A081	C 0.022UF, 16V	1	
	C5906	F1K1E106A136	C 10UF, 25V	1	
	C5908	F1G1A333A032	C0.033UF, 10V	1	
	C5909	F1G1H1020008	C 1000PF 50V	1	
	C5911	F1J1A106A043	C 10UF, 10V	1	
	C5912	F1G1E472A086	C 4700pF 25V	1	
	C5913	F1G1A473A032	C0.047UF, 10V	1	
	C5915	F1G1A473A032	C0.047UF, 10V	1	
	C5917	F1G1A473A032	C0.047UF, 10V	1	
	C5919	F1G1A473A032	C0.047UF, 10V	1	
	C8001	F1G1C104A077	C 0.1UF 16V	1	
	C8002	F1J1A106A087	C 10UF, 10V	1	
	C8003	F1G1C104A077	C 0.1UF 16V	1	
	C8004	F1G1C104A077	C 0.1UF 16V	1	
	C8005	F1G1C104A077	C 0.1UF 16V	1	
	C8006	F1G1C104A077	C 0.1UF 16V	1	
	C8007	F1G1C104A077	C 0.1UF 16V	1	
	C8008	F1G1C104A077	C 0.1UF 16V	1	
	C8009	F1J1A106A087	C 10UF, 10V	1	
	C8011	F1G1C104A077	C 0.1UF 16V	1	

Safety	Ref. No.	Part No.	Part Name & Description	Q'ty	Remarks
	C8013	F1G1C104A077	C 0.1UF 16V	1	
	C8014	F1G1C104A077	C 0.1UF 16V	1	
	C8015	F1G1C104A077	C 0.1UF 16V	1	
	C8016	F1G1C104A077	C 0.1UF 16V	1	
	C8017	F1J1A106A087	C 10UF, 10V	1	
	C8018	F1G1C104A077	C 0.1UF 16V	1	
	C8019	F1G1C104A077	C 0.1UF 16V	1	
	C8020	F1G1C104A077	C 0.1UF 16V	1	
	C8021	F1G1C104A077	C 0.1UF 16V	1	
	C8022	F1J1A106A087	C 10UF, 10V	1	
	C8023	F1J1A106A087	C 10UF, 10V	1	
	C8024	F1J0G2260001	C 22 UF 4 V	1	
	C8026	F1G1C104A077	C 0.1UF 16V	1	
	C8027	F1G1C104A077	C 0.1UF 16V	1	
	C8028	F1G1C104A077	C 0.1UF 16V	1	
	C8030	F1G1C104A077	C 0.1UF 16V	1	
	C8032	F1G1C104A077	C 0.1UF 16V	1	
	C8036	F1G1C104A077	C 0.1UF 16V	1	
	C8039	F1G1C104A077	C 0.1UF 16V	1	
	C8041	F1G1H1020008	C 1000PF 50V	1	
	C8042	F1G1C104A077	C 0.1UF 16V	1	
	C8043	F1G1C104A077	C 0.1UF 16V	1	
	C8044	F1G1C104A077	C 0.1UF 16V	1	
	C8045	F1G1C104A077	C 0.1UF 16V	1	
	C8047	F1G1C104A077	C 0.1UF 16V	1	
	C8048	F1G1C104A077	C 0.1UF 16V	1	
	C8049	F1J1A106A087	C 10UF, 10V	1	
	C8050	F1G1C104A077	C 0.1UF 16V	1	
	C8051	F1J1A106A087	C 10UF, 10V	1	
	C8052	F1G1C104A077	C 0.1UF 16V	1	
	C8053	F1G1C104A077	C 0.1UF 16V	1	
	C8054	F1G1C104A077	C 0.1UF 16V	1	
	C8055	F1G1C104A077	C 0.1UF 16V	1	
	C8056	F1G1C104A077	C 0.1UF 16V	1	
	C8057	F1G1C104A077	C 0.1UF 16V	1	
	C8100	F1G1E682A123	C 6800 pF 25 V	1	
	C8102	F1J1A475A087	C 4.7UF, 10V	1	
	C8104	F1H1C105A145	C 1 uF 16 V	1	
	C8106	F1G1C223A081	C 0.022UF, 16V	1	
	C8108	F1G1C104A077	C 0.1UF 16V	1	
	C8110	F1G1C104A077	C 0.1UF 16V	1	
	C8112	F1K1E106A136	C 10UF, 25V	1	
	C8114	F1K1E106A136	C 10UF, 25V	1	
	C8116	F1K1E106A136	C 10UF, 25V	1	
	C8118	F1K1E106A136	C 10UF, 25V	1	
	C8120	F1J0G2260001	C 22 UF 4 V	1	
	C8122	F1J0G2260001	C 22 UF 4 V	1	
	C8124	F1J0G2260001	C 22 UF 4 V	1	
	C8126	F1J0G2260001	C 22 UF 4 V	1	
	C8128	F1J0G2260001	C 22 UF 4 V	1	
	C8200	F1G1C104A077	C 0.1UF 16V	1	
	C8201	F1G1C104A077	C 0.1UF 16V	1	
	C8202	F1G1C104A077	C 0.1UF 16V	1	
	C8203	F1G1C104A077	C 0.1UF 16V	1	
	C8204	F1G1C104A077	C 0.1UF 16V	1	
	C8205	F1J1A106A087	C 10UF, 10V	1	
	C8206	F1G1C104A077	C 0.1UF 16V	1	
	C8208	F1G1C104A077	C 0.1UF 16V	1	
	C8210	F1G1C104A077	C 0.1UF 16V	1	
	C8213	F1G1C104A077	C 0.1UF 16V	1	
	C8214	F1J1A106A087	C 10UF, 10V	1	
	C8216	F1G1C104A077	C 0.1UF 16V	1	

Safety	Ref. No.	Part No.	Part Name & Description	Q'ty	Remarks
	C8218	F1G1C104A077	C 0.1UF 16V	1	
	C8219	F1G1C104A077	C 0.1UF 16V	1	
	C8222	F1G1C104A077	C 0.1UF 16V	1	
	C8223	F1G1C104A077	C 0.1UF 16V	1	
	C8224	F1G1C104A077	C 0.1UF 16V	1	
	C8225	F1G1C104A077	C 0.1UF 16V	1	
	C8226	F1G1C104A077	C 0.1UF 16V	1	
	C8227	F1G1C104A077	C 0.1UF 16V	1	
	C8300	F1G1H100A565	C 10PF 50V	1	
	C8301	F1G1H100A565	C 10PF 50V	1	
	C8302	F1G1C104A077	C 0.1UF 16V	1	
	C8303	F1G1C104A077	C 0.1UF 16V	1	
	C8304	F1G1C104A077	C 0.1UF 16V	1	
	C8305	F1G1A105A047	C 1UF 10V	1	
	C8306	F1G1A105A047	C 1UF 10V	1	
	C8307	F1G1A105A047	C 1UF 10V	1	
	C8308	F1G1A105A047	C 1UF 10V	1	
	C8309	F1G1A105A047	C 1UF 10V	1	
	C8310	F1G1A105A047	C 1UF 10V	1	
	C8311	F1G1A105A047	C 1UF 10V	1	
	C8536	EEEHB0J221UP	E 220UF, 6.3V	1	
	C8538	F1J1A106A043	C 10UF, 10V	1	
	C8539	F1G1C104A077	C 0.1UF 16V	1	
	C8544	F1J1A106A043	C 10UF, 10V	1	
	C8545	F1G1C104A077	C 0.1UF 16V	1	
	C8546	EEEHB0J221UP	E 220UF, 6.3V	1	
	C8548	F1J1A106A043	C 10UF, 10V	1	
	C8549	F1G1C104A077	C 0.1UF 16V	1	
	C8550	F1J1A106A043	C 10UF, 10V	1	
	C8551	F1G1C104A077	C 0.1UF 16V	1	
	C8565	F1G1C104A077	C 0.1UF 16V	1	
	C8570	F1G1C104A077	C 0.1UF 16V	1	
	C8603	F1J1A106A043	C 10UF, 10V	1	
	C8604	F1G1C104A077	C 0.1UF 16V	1	
	C8605	F1G1C104A077	C 0.1UF 16V	1	
	C8607	F1G1H100A565	C 10PF 50V	1	
	C8608	F1G1H100A565	C 10PF 50V	1	
	C8609	F1G1C104A077	C 0.1UF 16V	1	
	C8611	F1G1C104A077	C 0.1UF 16V	1	
	C8615	F1J1A106A043	C 10UF, 10V	1	
	C8616	F1J1A106A043	C 10UF, 10V	1	
	C8619	F1G1C104A077	C 0.1UF 16V	1	
	C8620	F1G1C104A077	C 0.1UF 16V	1	
	C8627	F1G1C104A077	C 0.1UF 16V	1	
	C8629	F1J0G2260001	C 22 UF 4 V	1	
	C8630	F1J0G2260001	C 22 UF 4 V	1	
	C8638	EEEHB0J221UP	E 220UF, 6.3V	1	
	C8640	F1J1A106A043	C 10UF, 10V	1	
	C8641	F1G1C104A077	C 0.1UF 16V	1	
	C8642	F1J1A106A043	C 10UF, 10V	1	
	C8643	F1G1C104A077	C 0.1UF 16V	1	
	C8644	F1G1H101A565	C 100PF 50V	1	
	C8645	F1G1H101A565	C 100PF 50V	1	
	C8707	F1G1C223A081	C 0.022UF, 16V	1	
	C8708	F1J1A106A043	C 10UF, 10V	1	
	C8709	F1J1A106A043	C 10UF, 10V	1	
	C8711	F1G1A333A032	C0.033UF, 10V	1	
	C8712	F1G1H5610004	C 560 pF 50 V	1	
	C8714	F1J1A475A087	C 4.7UF, 10V	1	
	C8715	F1J1A106A043	C 10UF, 10V	1	
	C8716	F1G1C104A077	C 0.1UF 16V	1	
	C8717	F1G1C104A077	C 0.1UF 16V	1	

Safety	Ref. No.	Part No.	Part Name & Description	Q'ty	Remarks
	C8724	F1K1E106A136	C 10UF, 25V	1	
	C8763	F1G1C104A077	C 0.1UF 16V	1	
	C8764	ECJ1VB1A105K	C 1UF, 10V	1	
	C8765	ECJ1VB1A105K	C 1UF, 10V	1	
	C8773	F1K1E106A136	C 10UF, 25V	1	
	C8774	F1K1E106A136	C 10UF, 25V	1	
	C8775	F1G1C223A081	C 0.022UF, 16V	1	
	C8776	F1G1E1030005	C 0.01UF 25V	1	
	C8777	F1G1E1030005	C 0.01UF 25V	1	
	C8779	F1K0J226A049	C 22UF, 6.3V	1	
	C8780	F1K0J226A049	C 22UF, 6.3V	1	
	C8781	F1G1C104A077	C 0.1UF 16V	1	
	C8900	F1G1C104A077	C 0.1UF 16V	1	
	C8901	F1G1C104A077	C 0.1UF 16V	1	
	C8902	F1G1C104A077	C 0.1UF 16V	1	
	C8903	F1G1C104A077	C 0.1UF 16V	1	
	C8950	F1G1H220A565	C 22PF, 50V	1	
	C8951	F1G1H220A565	C 22PF, 50V	1	
	C9052	F1G1C104A077	C 0.1UF 16V	1	
	C9099	F1G1C104A077	C 0.1UF 16V	1	
	C9100	F1J1A106A087	C 10UF, 10V	1	
	C9101	F1G1E1030005	C 0.01UF 25V	1	
	C9102	F1K1E106A136	C 10UF, 25V	1	
	C9103	F1G1E1030005	C 0.01UF 25V	1	
	C9300	F1G1C104A077	C 0.1UF 16V	1	
	C9301	F1G1H120A565	C 12PF, 50V	1	
	C9302	F1G1H120A565	C 12PF, 50V	1	
	C9308	F1G1C104A077	C 0.1UF 16V	1	
	C9311	F1G1C104A077	C 0.1UF 16V	1	
	C9312	F1J1A106A087	C 10UF, 10V	1	
	C9313	F1G1C104A077	C 0.1UF 16V	1	
	C9328	F1G1C104A077	C 0.1UF 16V	1	
	C9330	F1G1A105A047	C 1UF 10V	1	
	C9331	F1G1A105A047	C 1UF 10V	1	
	C9332	F1G1A105A047	C 1UF 10V	1	
	C9337	F1J1A106A087	C 10UF, 10V	1	
	C9362	F1G1C104A077	C 0.1UF 16V	1	
	C9366	F1G1A105A047	C 1UF 10V	1	
	C9371	F1J1A106A087	C 10UF, 10V	1	
	C9375	F1G1C104A077	C 0.1UF 16V	1	
	C9380	F1G1C104A077	C 0.1UF 16V	1	
	C9389	F1G1A105A047	C 1UF 10V	1	
	C9392	F1J1A106A087	C 10UF, 10V	1	
	C9400	F1G1C104A077	C 0.1UF 16V	1	
	C9401	F1G1C104A077	C 0.1UF 16V	1	
	C9402	F1G1C104A077	C 0.1UF 16V	1	
	C9404	F1G1C104A077	C 0.1UF 16V	1	
	C9407	F1G1C104A077	C 0.1UF 16V	1	
	C9409	F1J1A106A087	C 10UF, 10V	1	
	C9411	F1J1A106A087	C 10UF, 10V	1	
	C9413	F1J1A106A087	C 10UF, 10V	1	
	C9415	F1J1A106A087	C 10UF, 10V	1	
	C9820	F1J1A106A087	C 10UF, 10V	1	
	C9822	F1J1A106A087	C 10UF, 10V	1	
	C9860	F1G1E472A086	C 4700pF 25V	1	
	C9861	F1J1A475A087	C 4.7UF, 10V	1	
	C9862	F1K1E106A136	C 10UF, 25V	1	
	C9863	F1K1E106A136	C 10UF, 25V	1	
	C9864	F1K1E106A136	C 10UF, 25V	1	
	C9865	F1J1A106A043	C 10UF, 10V	1	
	C9866	F1J0G2260001	C 22 UF 4 V	1	
	C9867	F1J1A106A043	C 10UF, 10V	1	

Safety	Ref. No.	Part No.	Part Name & Description	Q'ty	Remarks
	C9868	F1J0G2260001	C 22 UF 4 V	1	
	C9869	F1J1A106A043	C 10UF, 10V	1	
	C9871	F1J0G2260001	C 22 UF 4 V	1	
	C9872	F1H1C105A145	C 1 uF 16 V	1	
	C9873	F1G1E122A123	C 1200pF 25V	1	
	C9874	F1G1C104A077	C 0.1UF 16V	1	
	C9875	F1G1C104A077	C 0.1UF 16V	1	
	C9876	F1K1E106A136	C 10UF, 25V	1	
	C16001	F1L2J562A022	C 5600PF, 630V	1	
	C16011	F2A2E141A217	E 140UF, 250V	1	
	C16012	F2A2E141A217	E 140UF, 250V	1	
	C16013	F0C2E155A286	C 1.5UF, 250V	1	PAVCTH
	C16024	F1L2J332A022	C 3300PF, 630V	1	
	C16041	ECJ1VB1H392K	C 3900UF, 50V	1	
	C16044	F1E2J821A002	C 820PF, 630V	1	
	C16051	ECJ1VB1H392K	C 3900UF, 50V	1	
	C16061	F1E2J821A002	C 820PF, 630V	1	
	C16101	F1L2J222A022	C 2200PF, 630V	1	
	C16104	F1H1E470A130	C 47PF, 25V	1	
	C16105	F1H1E470A130	C 47PF, 25V	1	
	C16131	F1K1E475A134	C 4.7UF 25V	1	
	C16132	F1H1C105A145	C 1 uF 16 V	1	
	C16133	F2A1E101A089	E 100UF 25V	1	
	C16135	F1K1E105A029	C 1UF, 25V	1	
	C16153	F1K1E475A134	C 4.7UF 25V	1	
	C16154	F1K1E475A134	C 4.7UF 25V	1	
	C16191	F1K1E475A134	C 4.7UF 25V	1	
	C16192	F1H1C105A145	C 1 uF 16 V	1	
	C16193	F2A1E470B725	E 47UF, 25V	1	PAVCTH
	C16195	F1K1E105A029	C 1UF, 25V	1	
	C16201	F0C2E405A278	C 4UF, 250V	1	
	C16202	F0C2E405A278	C 4UF, 250V	1	
	C16242	F1H1C105A145	C 1 uF 16 V	1	
	C16243	ECJ1VB1H103K	C 0.01UF, 50V	1	
	C16244	F1J1A106A087	C 10UF, 10V	1	
	C16271	F2A1E221B726	E 220UF, 25V	1	PAVCTH
	C16280	F1K1E105A029	C 1UF, 25V	1	
	C16285	F1H1H104A970	C 0.1UF, , 50V	1	
	C16286	F1H1H104A970	C 0.1UF, , 50V	1	
	C16287	F1H1H104A970	C 0.1UF, , 50V	1	
	C16314	F2A2E141A217	E 140UF, 250V	1	
	C16315	ECJ1VB1A105K	C 1UF, 10V	1	
	C16316	ECJ1XB1C104K	C 0.1UF, Z, 16V	1	
	C16317	ECJ1VB1A105K	C 1UF, 10V	1	
	C16318	F1J1H104A717	C 0.1UF, 50V	1	
	C16319	F1J1H104A717	C 0.1UF, 50V	1	
	C16328	F2A2T1210001	E 120UF, 220V	1	
	C16330	F0C2E105A286	C 1 UF 250 V	1	PAVCTH
	C16401	F1L2J562A022	C 5600PF, 630V	1	
	C16411	F2A2E141A217	E 140UF, 250V	1	
	C16412	F2A2E141A217	E 140UF, 250V	1	
	C16414	F2A2E141A217	E 140UF, 250V	1	
	C16421	F1L2J562A022	C 5600PF, 630V	1	
	C16441	ECJ1VB1H392K	C 3900UF, 50V	1	
	C16451	ECJ1VB1H392K	C 3900UF, 50V	1	
	C16460	F1E2J222A002	C 2200PF, 630V	1	
	C16472	ECJ1VB1A105K	C 1UF, 10V	1	
	C16490	F1H1C105A145	C 1 uF 16 V	1	
	C16502	F1K1E475A134	C 4.7UF 25V	1	
	C16503	F2A1E221B726	E 220UF, 25V	1	PAVCTH
	C16505	F1K1E105A029	C 1UF, 25V	1	
	C16506	F1H1C105A145	C 1 uF 16 V	1	

Safety	Ref. No.	Part No.	Part Name & Description	Q'ty	Remarks
	C16507	F0C2E155A286	C 1.5UF, 250V	1	PAVCTH
	C16531	F1K1E475A134	C 4.7UF 25V	1	
	C16534	F1H1C105A145	C 1 uF 16 V	1	
	C16551	F1K1E475A134	C 4.7UF 25V	1	
	C16561	F1J1A106A087	C 10UF, 10V	1	
	C16562	F1H1C105A145	C 1 uF 16 V	1	
	C16564	F1H1C105A145	C 1 uF 16 V	1	
	C16565	ECJ1VB1H103K	C 0.01UF, 50V	1	
	C16566	ECJ1VB1H103K	C 0.01UF, 50V	1	
	C16567	F1H1C105A145	C 1 uF 16 V	1	
	C16584	ECJ1VB1H392K	C 3900UF, 50V	1	
	C16593	ECJ1XC1H102J	C 1000PF, J, 50V	1	
	C16602	F1H1H2200008	C 22PF, 50V	1	
	C16603	F1K2J102A014	C 1000PF, 630V	1	
	C16604	F1K2J102A014	C 1000PF, 630V	1	
	C16631	F0C2E405A278	C 4UF, 250V	1	
	C16632	F0C2E405A278	C 4UF, 250V	1	
	C16641	F1K2J222A014	C 2200PF ,630V	1	
	C16645	F1K2J102A014	C 1000PF, 630V	1	
	C16646	F1K2J102A014	C 1000PF, 630V	1	
	C16661	F1K2J102A038	C 1000PF, 630V	1	
	C16662	F1K2J102A038	C 1000PF, 630V	1	
	C16664	ECJ1XC1H820J	C 82PF, J, 50V	1	
	C16665	ECJ1XC1H820J	C 82PF, J, 50V	1	
	C16666	ECJ1XC1H820J	C 82PF, J, 50V	1	
	C16668	F1H1H821A831	C 820 PF, 50V	1	
	C16685	F1H1H104A970	C 0.1UF, , 50V	1	
	C16692	F1H1H104A970	C 0.1UF, , 50V	1	
	C16723	F1K1E105A029	C 1UF, 25V	1	
	C16724	F1K1E475A134	C 4.7UF 25V	1	
	C16753	F1K1E475A134	C 4.7UF 25V	1	
	C16770	F1H1C105A145	C 1 uF 16 V	1	
	C16791	F2A1E221B726	E 220UF, 25V	1	PAVCTH
	C16793	F2A1E221B726	E 220UF, 25V	1	PAVCTH
	C16794	F1J1A106A087	C 10UF, 10V	1	
	C16795	F2A1E221B726	E 220UF, 25V	1	PAVCTH
	C16796	F1K1E475A134	C 4.7UF 25V	1	
	C16797	F1H1H104A970	C 0.1UF, , 50V	1	
	C16813	F2A2T1210001	E 120UF, 220V	1	
	C16833	F1K2J222A014	C 2200PF ,630V	1	
	C16834	F1K2J222A014	C 2200PF ,630V	1	
	C16842	F2A2C1010028	E 100UF, 160V	1	
	C16843	ECJ1VB1A105K	C 1UF, 10V	1	
	C16844	F1J1H104A717	C 0.1UF, 50V	1	
	C16854	F1J1H104A717	C 0.1UF, 50V	1	
	C16856	ECJ1VB1A105K	C 1UF, 10V	1	
	C16858	ECJ1XB1C104K	C 0.1UF, Z, 16V	1	
	C16859	F1J1H104A717	C 0.1UF, 50V	1	
	C16860	ECJ1VB1A105K	C 1UF, 10V	1	
	C16861	ECJ1XB1C104K	C 0.1UF, Z, 16V	1	
	C16862	ECJ1VB1A105K	C 1UF, 10V	1	
	C16863	F1J1H104A717	C 0.1UF, 50V	1	
	C16865	F1H1C105A145	C 1 uF 16 V	1	
	C16891	F1K1E105A029	C 1UF, 25V	1	
	C16902	F1E2J472A001	C 4700PF, 630V	1	
	C16903	F1E2J152A002	C 1500PF, 630V	1	
	C16910	F1E2J821A002	C 820PF, 630V	1	
	C16912	F1E2J821A002	C 820PF, 630V	1	
	C17101	ECJ1VB1A105K	C 1UF, 10V	1	
	C17102	ECJ1VB1A105K	C 1UF, 10V	1	
	C17103	ECJ1VB1A105K	C 1UF, 10V	1	
	C17109	F1K2A224A033	C 0.22UF, 100V	1	

Safety	Ref. No.	Part No.	Part Name & Description	Q'ty	Remarks
	C17110	F1K2A224A033	C 0.22UF, 100V	1	
	C17112	F1K2A224A033	C 0.22UF, 100V	1	
	C17114	ECJ1XC1H102J	C 1000PF, J, 50V	1	
	C17115	ECJ1XC1H102J	C 1000PF, J, 50V	1	
	C17116	ECJ1XC1H102J	C 1000PF, J, 50V	1	
	C17117	ECJ1XC1H102J	C 1000PF, J, 50V	1	
	C17201	ECJ1VB1A105K	C 1UF, 10V	1	
	C17202	ECJ1VB1A105K	C 1UF, 10V	1	
	C17203	ECJ1VB1A105K	C 1UF, 10V	1	
	C17204	ECJ1VB1A105K	C 1UF, 10V	1	
	C17205	ECJ1VB1A105K	C 1UF, 10V	1	
	C17206	ECJ1VB1A105K	C 1UF, 10V	1	
	C17207	ECJ1XB1C104K	C 0.1UF, Z, 16V	1	
	C17208	ECJ1XB1C104K	C 0.1UF, Z, 16V	1	
	C17223	F1K2A224A033	C 0.22UF, 100V	1	
	C17224	F1K2A224A033	C 0.22UF, 100V	1	
	C17228	F1K2A224A033	C 0.22UF, 100V	1	
	C17229	F1K2A224A033	C 0.22UF, 100V	1	
	C17231	F1K2A224A033	C 0.22UF, 100V	1	
	C17233	F1K2A224A033	C 0.22UF, 100V	1	
	C17301	ECJ1VB1A105K	C 1UF, 10V	1	
	C17302	ECJ1VB1A105K	C 1UF, 10V	1	
	C17303	ECJ1VB1A105K	C 1UF, 10V	1	
	C17304	ECJ1VB1A105K	C 1UF, 10V	1	
	C17305	ECJ1VB1A105K	C 1UF, 10V	1	
	C17306	ECJ1VB1A105K	C 1UF, 10V	1	
	C17307	ECJ1XB1C104K	C 0.1UF, Z, 16V	1	
	C17308	ECJ1XB1C104K	C 0.1UF, Z, 16V	1	
	C17328	F1K2A224A033	C 0.22UF, 100V	1	
	C17330	F1K2A224A033	C 0.22UF, 100V	1	
	C17332	F1K2A224A033	C 0.22UF, 100V	1	
	C17333	F1K2A224A033	C 0.22UF, 100V	1	
	C17336	F1K2A224A033	C 0.22UF, 100V	1	
	C17337	F1K2A224A033	C 0.22UF, 100V	1	
	CB1	K1MY55B00002	55P CONNECTOR	1	
	CB2	K1MY55B00002	55P CONNECTOR	1	
	CB3	K1MY55B00002	55P CONNECTOR	1	
	CB4	K1MY55B00002	55P CONNECTOR	1	
	CB5	K1MY55B00002	55P CONNECTOR	1	
	CB6	K1MY55B00002	55P CONNECTOR	1	
	CB7	K1MY55B00002	55P CONNECTOR	1	
	CB8	K1MY55B00002	55P CONNECTOR	1	
	CB9	K1MY55B00002	55P CONNECTOR	1	
	CB10	K1MY55B00002	55P CONNECTOR	1	
	CB11	K1MY55B00002	55P CONNECTOR	1	
	CB12	K1MY55B00002	55P CONNECTOR	1	
	CB13	K1MY55B00002	55P CONNECTOR	1	
	CB14	K1MY55B00002	55P CONNECTOR	1	
	CB15	K1MY55B00002	55P CONNECTOR	1	
	D2820	B3AGB0000065	LED	1	
	D2850	B3EB00000056	LED	1	
	D2851	B3EB00000056	LED	1	
	D2852	B3EB00000056	LED	1	
	D2853	B3EB00000056	LED	1	
	D3050	K7AAAY000006	PHOTO LINK	1	
	D4500	B0JCCD000020	DIODE	1	
	D4604	B0JCCE000021	DIODE	1	
	D4621	B0JCCE000021	DIODE	1	
	D4649	B0JCCE000021	DIODE	1	
	D4671	DZ2J056M0L	ZENER DIODE	1	

Safety	Ref. No.	Part No.	Part Name & Description	Q'ty	Remarks
	D4672	DZ2J056M0L	ZENER DIODE	1	
	D4673	DZ2J056M0L	ZENER DIODE	1	
	D5350	B0JCPE000038	DIODE	1	
	D5900	B0JCMD000066	ZENER DIODE	1	
	D8708	DZ2J068M0L	ZENER DIODE	1	
	D8709	B0ADCK000001	DIODE	1	
	D8711	B0ADCK000001	DIODE	1	
	D8712	DZ2J068M0L	ZENER DIODE	1	
	D8713	DZ2J068M0L	ZENER DIODE	1	
	D8716	DA2J10100L	DIODE	1	
	D8719	DZ2J068M0L	ZENER DIODE	1	
	D8720	B0JCMD000066	ZENER DIODE	1	
	D8721	B0JCPD000026	DIODE	1	
	D8725	B0ADCK000001	DIODE	1	
	D8726	DZ2J068M0L	ZENER DIODE	1	
	D9806	B0ADCK000001	DIODE	1	
	D9807	B0ADCK000001	DIODE	1	
	D16001	B0ECLP000010	DIODE	1	PAVCTH
	D16002	B0ECLP000010	DIODE	1	PAVCTH
	D16021	B0ECLP000010	DIODE	1	PAVCTH
	D16022	DA3CF30ACL	ZENER DIODE	1	
	D16041	B0FCCN000003	DIODE	1	
	D16051	B0FCCN000003	DIODE	1	
	D16071	B0ECLP000010	DIODE	1	PAVCTH
	D16072	B0ECKP000055	DIODE	1	
	D16073	B0ECKP000055	DIODE	1	
	D16131	B0ECKP000055	DIODE	1	
	D16133	B0ACCJ000048	DIODE	1	
	D16134	DZ2J051M0L	ZENER DIODE	1	
	D16191	B0ECKP000055	DIODE	1	
	D16192	B0ACCJ000048	DIODE	1	
	D16193	DZ2J051M0L	ZENER DIODE	1	
	D16243	B0ADCJ000100	DIODE	1	
	D16251	DZ2J330M0L	ZENER DIODE	1	
	D16252	DZ2J330M0L	ZENER DIODE	1	
	D16253	DZ2J051M0L	ZENER DIODE	1	
	D16254	B3ABB0000210	LED	1	
	D16255	B0ADCJ000100	DIODE	1	
	D16282	DZ2J068M0L	ZENER DIODE	1	
	D16285	B0ADEJ000035	ZENER DIODE	1	
	D16286	B0ACCJ000048	DIODE	1	
	D16315	DZ2J150M0L	ZENER DIODE	1	
	D16316	B0ECKP000055	DIODE	1	
	D16317	B0ECKP000055	DIODE	1	
	D16401	B0FCCN000003	DIODE	1	
	D16407	B0JCME000093	DIODE	1	
	D16411	B0ADCJ000100	DIODE	1	
	D16413	B0ACCJ000048	DIODE	1	
	D16421	B0FCBN000001	DIODE	1	
	D16430	B0ECKP000055	DIODE	1	
	D16432	B0ECKP000055	DIODE	1	
	D16433	B0ECKP000055	DIODE	1	
	D16461	B0FCCN000003	DIODE	1	
	D16473	B0ACCJ000048	DIODE	1	
	D16474	B0ACCJ000048	DIODE	1	
	D16475	DZ2J051M0L	ZENER DIODE	1	
	D16476	B0ACCJ000048	DIODE	1	
	D16481	B0FCCN000003	DIODE	1	
	D16491	B0ACCJ000048	DIODE	1	
	D16492	DZ2J047M0L	ZENER DIODE	1	
	D16493	B0ADCJ000100	DIODE	1	
	D16506	DZ2J051M0L	ZENER DIODE	1	

Safety	Ref. No.	Part No.	Part Name & Description	Q'ty	Remarks
	D16534	DZ2J051M0L	ZENER DIODE	1	
	D16536	B0ECKP000055	DIODE	1	
	D16537	B0ADCJ000100	DIODE	1	
	D16538	B0ADCJ000100	DIODE	1	
	D16581	DZ2J330M0L	ZENER DIODE	1	
	D16582	DZ2J330M0L	ZENER DIODE	1	
	D16583	B3ABB0000210	LED	1	
	D16602	DZ2J043M0L	ZENER DIODE	1	
	D16603	B0ACCJ000048	DIODE	1	
	D16604	B0ADCJ000100	DIODE	1	
	D16605	B0ACCJ000048	DIODE	1	
	D16607	B0ACCJ000048	DIODE	1	
	D16608	B0ECKP000055	DIODE	1	
	D16609	B0ECKP000055	DIODE	1	
	D16618	B0ECKP000055	DIODE	1	
	D16642	B0FCCN000004	DIODE	1	
	D16643	B0FCCN000004	DIODE	1	
	D16645	DZ2J150M0L	ZENER DIODE	1	
	D16646	DZ2J150M0L	ZENER DIODE	1	
	D16647	DZ2J150M0L	ZENER DIODE	1	
	D16648	DZ2J043M0L	ZENER DIODE	1	
	D16651	DZ2J051M0L	ZENER DIODE	1	
	D16652	B0ECKP000055	DIODE	1	
	D16662	DZ2J150M0L	ZENER DIODE	1	
	D16663	DZ2J150M0L	ZENER DIODE	1	
	D16664	DZ2J150M0L	ZENER DIODE	1	
	D16669	B0ACCJ000048	DIODE	1	
	D16673	B0ECHR000004	DIODE	1	
	D16674	B0ECHR000004	DIODE	1	
	D16685	B0ACCJ000048	DIODE	1	
	D16710	DZ2J15000L	ZENER DIODE	1	
	D16711	B0ECHR000004	DIODE	1	
	D16712	B0ECHR000004	DIODE	1	
	D16713	B0ECHS000002	DIODE	1	
	D16714	B0ECHS000002	DIODE	1	
	D16720	B0ECHR000004	DIODE	1	
	D16728	B0ECKP000055	DIODE	1	
	D16791	DZ2J240M0L	ZENER DIODE	1	
	D16792	B0ACCJ000048	DIODE	1	
	D16795	B0ACCJ000048	DIODE	1	
	D16822	B0ACCJ000048	DIODE	1	
	D16823	B0ADCJ000100	DIODE	1	
	D16824	B0ACCJ000048	DIODE	1	
	D16825	DZ2J330M0L	ZENER DIODE	1	
	D16833	B0ECHR000004	DIODE	1	
	D17101	B0ACCJ000048	DIODE	1	
	D17102	B0ACCJ000048	DIODE	1	
	D17103	B0JCCD000020	DIODE	1	
	D17301	B0ACCJ000048	DIODE	1	
	D17302	B0ACCJ000048	DIODE	1	
	D17303	B0JCCD000020	DIODE	1	
	IC3001	C1AB00003385	IC	1	
	IC3753	C1ZBZ0004368	IC	1	
	IC4900	C1AB00003705	IC	1	
	IC5000	AN34044A-VF	IC	1	
	IC5251	C0CBCBC00227	IC	1	
	IC5350	C0DBAYY01058	IC	1	
	IC5900	C0DBAYY00931	IC	1	
	IC5901	C1ZBZ0004339	IC	1	
	IC8000	MN2WS0200LE	IC	1	
	IC8100	C0DBAYY00715	IC	1	

Safety	Ref. No.	Part No.	Part Name & Description	Q'ty	Remarks
	IC8200	C3ABUY000009	IC	1	
	IC8201	C3ABTY000025	IC	1	
	IC8532	C0DBZYY00450	IC	1	
	IC8533	C0DBZYY00368	IC	1	
	IC8601	C1CB00003491	IC	1	
	IC8604	C0DBZYY00368	IC	1	
	IC8701	C0DBAYY00931	IC	1	
	IC8702	C0DBAFG00029	IC	1	
	IC8706	C0DBGYY00887	IC	1	
	IC8707	C0DBAYY00915	IC	1	
	IC8900	TVRS216AG	IC	1	
	IC8901	TVR***1D	IC	1	(D) PAVCTH
	IC8901	TVR***1G	IC	1	(G) PAVCTH
	IC8901	TVR***1M	IC	1	(M) PAVCTH
	IC8901	TVR***1P	IC	1	(P) PAVCTH
	IC8901	TVR***1V	IC	1	(V) PAVCTH
	IC8902	TVR***2D	IC	1	(D) PAVCTH
	IC8902	TVR***2G	IC	1	(G) PAVCTH
	IC8902	TVR***2M	IC	1	(M) PAVCTH
	IC8902	TVR***2P	IC	1	(P) PAVCTH
	IC8902	TVR***2V	IC	1	(V) PAVCTH
	IC9300	C1AB00003461	IC	1	
	IC9304	TVRS209AC	IC	1	PAVCTH
	IC9400	C0JBAU000089	IC	1	
	IC9401	C0JBAU000089	IC	1	
	IC9402	C0JBAU000089	IC	1	
	IC9820	C0CBCAG00046	IC	1	
	IC9860	C0DBAYY00715	IC	1	
	IC16131	C0ZBZ0001822	IC	1	
	IC16132	C0ZBZ0001822	IC	1	
	IC16151	C0ZBZ0001822	IC	1	
	IC16152	C0ZBZ0001822	IC	1	
	IC16191	C0ZBZ0001822	IC	1	
	IC16241	C0JBAU000088	IC	1	
	IC16243	C0JBAB000715	IC	1	
	IC16244	C0JBAA000558	IC	1	
	IC16304	MIP3910MSSCF	IC	1	
	IC16312	C0DBZMC00006	IC	1	
	IC16471	C0DBEYY00114	IC	1	
	IC16490	C0DBZMC00006	IC	1	
	IC16491	C0BBAA000008	LINEAR IC	1	
	IC16501	C0ZBZ0001822	IC	1	
	IC16502	C0ZBZ0001822	IC	1	
	IC16521	C0ZBZ0001822	IC	1	
	IC16522	C0ZBZ0001822	IC	1	
	IC16561	C0JBAU000088	IC	1	
	IC16562	C0JBAU000088	IC	1	
	IC16563	C0JBAB000996	IC	1	
	IC16564	C0JBAE000321	IC	1	
	IC16565	C0JBAE000321	IC	1	
	IC16684	C0ZBZ0001822	IC	1	
	IC16691	C0JBAC000509	IC	1	
	IC16724	C0CBADE00049	IC	1	
	IC16784	MIP3910MSSCF	IC	1	
	IC16785	C0DBZYY00352	IC	1	
	IC16786	MIP3910MSSCF	IC	1	
	IC16787	C0DBZYY00352	IC	1	
	IC16792	C0BBAA000008	LINEAR IC	1	
	IC16793	C0DBZMC00006	IC	1	
	IC16795	C0CBALC00012	IC	1	
	IC16921	C1ZBZ0004292	IC	1	
	IC17201	C0JBAU000088	IC	1	

Safety	Ref. No.	Part No.	Part Name & Description	Q'ty	Remarks
	IC17202	C0JBAU000088	IC	1	
	IC17301	C0JBAU000088	IC	1	
	IC17302	C0JBAU000089	IC	1	
	JK3000B	K1U920A00003	CONNECTOR UNIT	1	
	JK3001	K2HC103E0030	JACK	1	PAVCTH
	JK3300	K1FY315A0010	CONNECTOR	1	
	JK3701	K1U308B00003	CONNECTOR UNIT	1	PAVCTH
	JK4600	K1FY119D0015	CONNECTOR	1	
	JK4601	K1FY119D0015	CONNECTOR	1	
	JK4602	K1FY119E0028	CONNECTOR	1	PAVCTH
	JK8531	K1FY208B0008	CONNECTOR	1	
	JK8650	K1NA12E00016	12P CONNECTOR	1	
	JK8651	K1FY104A0021	CONNECTOR	1	PAVCTH
	JK8702	K2LC108A0012	JACK	1	
	JS1050	D0GAR00J0005	M 0 OHM, 1/16W	1	
	JS1051	D0GAR00J0005	M 0 OHM, 1/16W	1	
	JS1052	D0GAR00J0005	M 0 OHM, 1/16W	1	
	JS1053	D0GDR00J0004	M 0 OHM, 1/8W	1	
	JS1054	D0GAR00J0005	M 0 OHM, 1/16W	1	
	K1	K1KA08B00270	8P CONNECTOR	1	
	L3001	J0JYC0000068	CHIP INDUCTOR	1	
	L3005	J0JYC0000331	CHIP INDUCTOR	1	
	L3006	J0JYC0000331	CHIP INDUCTOR	1	
	L3007	D0GAR00J0005	M 0 OHM, 1/16W	1	
	L3008	D0GAR00J0005	M 0 OHM, 1/16W	1	
	L4500	J0JHC0000117	CHIP INDUCTOR	1	
	L4501	J0JYC0000068	CHIP INDUCTOR	1	
	L4502	J0JYC0000068	CHIP INDUCTOR	1	
	L4503	J0JYC0000068	CHIP INDUCTOR	1	
	L4504	J0JHC0000117	CHIP INDUCTOR	1	
	L4505	J0JYC0000068	CHIP INDUCTOR	1	
	L4506	J0JYC0000068	CHIP INDUCTOR	1	
	L4507	J0JYC0000068	CHIP INDUCTOR	1	
	L4508	J0JHC0000117	CHIP INDUCTOR	1	
	L4509	J0JYC0000068	CHIP INDUCTOR	1	
	L4510	J0JYC0000068	CHIP INDUCTOR	1	
	L4511	J0JYC0000068	CHIP INDUCTOR	1	
	L4800	J0JCC0000278	CHIP INDUCTOR	1	
	L4801	J0JGC0000020	CHIP INDUCTOR	1	
	L4802	J0JGC0000020	CHIP INDUCTOR	1	
	L4803	G1CR39J00009	INDUCTION COIL	1	(G)
	L4804	G1CR39J00009	INDUCTION COIL	1	(G)
	L4805	J0JGC0000020	CHIP INDUCTOR	1	
	L4900	G1C150MA0426	INDUCTION COIL	1	
	L4901	G1C150MA0426	INDUCTION COIL	1	
	L4902	G1C150MA0426	INDUCTION COIL	1	
	L4903	G1C150MA0426	INDUCTION COIL	1	
	L5350	G1C4R7MA0445	INDUCTION COIL	1	
	L5900	G1C6R8MA0445	INDUCTION COIL	1	
	L8001	J0JCC0000287	CHIP INDUCTOR	1	
	L8002	J0JHC0000045	CHIP INDUCTOR	1	
	L8003	J0JHC0000045	CHIP INDUCTOR	1	
	L8004	J0JHC0000045	CHIP INDUCTOR	1	
	L8005	J0JKC0000021	CHIP INDUCTOR	1	
	L8006	J0JCC0000287	CHIP INDUCTOR	1	
	L8007	J0JCC0000287	CHIP INDUCTOR	1	
	L8100	G1C4R7MA0416	INDUCTION COIL	1	
	L8102	G1C3R3MA0460	INDUCTION COIL	1	

Safety	Ref. No.	Part No.	Part Name & Description	Q'ty	Remarks
	L8532	J0JHC0000045	CHIP INDUCTOR	1	
	L8533	J0JHC0000045	CHIP INDUCTOR	1	
	L8600	J0JHC0000045	CHIP INDUCTOR	1	
	L8601	J0JHC0000045	CHIP INDUCTOR	1	
	L8609	J0JHC0000045	CHIP INDUCTOR	1	
	L8610	J0JHC0000045	CHIP INDUCTOR	1	
	L8701	G1C6R8MA0445	INDUCTION COIL	1	
	L8702	G1C6R8MA0445	INDUCTION COIL	1	
	L9303	J0JHC0000117	CHIP INDUCTOR	1	
	L9860	G1C2R2MA0449	INDUCTION COIL	1	
	L9861	G1C6R8MA0445	INDUCTION COIL	1	
	L16001	G0CR37KA0216	PEAKING COIL	1	PAVCTH
	L16303	G0C471MA0049	PEAKING COIL	1	
	L16411	G0CR32KA0216	PEAKING COIL	1	PAVCTH
	PA5440	K5H5022A0031	FUSE	1	
	PA5601	K5H5022A0031	FUSE	1	
	PA5900	K5H1022A0031	FUSE	1	
	PC16131	B3PBE0000058	IC	1	
	PC16191	B3PBE0000060	IC	1	
	PC16251	B3PBA0000580	IC	1	
	PC16301	B3PBA0000580	IC	1	
	PC16461	B3PBE0000058	IC	1	
	PC16462	B3PBE0000060	IC	1	
	PC16480	B3PBA0000580	IC	1	
	PC16581	B3PBA0000580	IC	1	
	PC16603	B3PBA0000580	IC	1	
	PC16685	B3PBA0000496	IC	1	
	PC16723	B3PBA0000580	IC	1	
	PC16896	B3PBA0000580	IC	1	
	PC16897	B3PBA0000580	IC	1	
	Q2810	B1ABCE000015	TRANSISTOR	1	
	Q2811	B1ABCE000015	TRANSISTOR	1	
	Q2812	B1ABCE000015	TRANSISTOR	1	
	Q3133	B1AAFB000004	TRANSISTOR	1	
	Q3134	B1AAFB000004	TRANSISTOR	1	
	Q3135	B1ADCF000194	TRANSISTOR	1	
	Q4500	B1HFCFA00026	TRANSISTOR	1	
	Q4501	B1ADCE000022	TRANSISTOR	1	
	Q4502	B1ABCF000231	TRANSISTOR	1	
	Q4503	B1ABCF000231	TRANSISTOR	1	
	Q4504	B1ABCF000231	TRANSISTOR	1	
	Q4930	B1ADCF000194	TRANSISTOR	1	
	Q4971	B1ABCE000015	TRANSISTOR	1	
	Q4972	B1ADCF000194	TRANSISTOR	1	
	Q4973	B1AAFB000004	TRANSISTOR	1	
	Q4974	B1AAFB000004	TRANSISTOR	1	
	Q8100	FK8V03050L	TRANSISTOR	1	
	Q8101	FK8V03050L	TRANSISTOR	1	
	Q8102	B1MBEDA00027	FET	1	
	Q8709	B1ADCF000194	TRANSISTOR	1	
	Q8711	B1ABBE000003	TRANSISTOR	1	
	Q8900	B1ADCF000194	TRANSISTOR	1	
	Q9860	B1MBEDA00027	FET	1	
	Q9861	B1MBEDA00027	FET	1	
	Q16001	DG3C3010CL	TRANSISTOR	1	
	Q16002	DG3C3010CL	TRANSISTOR	1	
	Q16021	DG3C3010CL	TRANSISTOR	1	
	Q16022	DG3C3010CL	TRANSISTOR	1	
	Q16041	DG3C3020CL	TRANSISTOR	1	

Safety	Ref. No.	Part No.	Part Name & Description	Q'ty	Remarks
	Q16051	DG3C3020CL	TRANSISTOR	1	
	Q16055	B1HFPFA00001	TRANSISTOR	1	
	Q16056	B1HFPFA00001	TRANSISTOR	1	
	Q16101	B1CFRM000015	FET	1	
	Q16102	B1CFRM000023	FET	1	PAVCTH
	Q16141	B1HFPFA00001	TRANSISTOR	1	
	Q16161	B1HFPFA00001	TRANSISTOR	1	
	Q16251	B1ABCF000231	TRANSISTOR	1	
	Q16280	B1ABCE000015	TRANSISTOR	1	
	Q16402	B1JBDN000004	TRANSISTOR	1	
	Q16403	B1JBDN000004	TRANSISTOR	1	
	Q16422	B1JBDN000004	TRANSISTOR	1	
	Q16423	B1JBDN000004	TRANSISTOR	1	
	Q16441	DG3C3020CL	TRANSISTOR	1	
	Q16451	DG3C3020CL	TRANSISTOR	1	
	Q16471	B1ABCE000015	TRANSISTOR	1	
	Q16501	B1HFPFA00001	TRANSISTOR	1	
	Q16521	B1HFPFA00001	TRANSISTOR	1	
	Q16531	B1HFPFA00001	TRANSISTOR	1	
	Q16538	B1CBGD000001	FET	1	
	Q16551	B1HFPFA00001	TRANSISTOR	1	
	Q16581	B1ABCF000231	TRANSISTOR	1	
	Q16600	B1CFRM000020	FET	1	
	Q16601	B1CFRQ000021	FET	1	
	Q16602	DSA2001S0L	TRANSISTOR	1	
	Q16606	DSC2001S0L	TRANSISTOR	1	
	Q16607	B1CBGD000001	FET	1	
	Q16622	B1JBDN000004	TRANSISTOR	1	
	Q16623	B1JBDN000004	TRANSISTOR	1	
	Q16646	DSA2001S0L	TRANSISTOR	1	
	Q16647	B1CBGD000001	FET	1	
	Q16660	B1CFRQ000021	FET	1	
	Q16661	B1JBER000002	TRANSISTOR	1	
	Q16762	B1HFPFA00001	TRANSISTOR	1	
	Q16815	B1ABCN000007	TRANSISTOR	1	
	Q16817	DSC2001Q0L	TRANSISTOR	1	
	Q16818	B1CBGD000001	FET	1	
	Q16819	B1CBGD000001	FET	1	
	Q16820	B1CBGD000001	FET	1	
	Q16891	DSA2001S0L	TRANSISTOR	1	
	Q16892	DSC2001Q0L	TRANSISTOR	1	
	Q16921	B1CBGD000001	FET	1	
	Q16922	B1CBGD000001	FET	1	
	Q16931	B1ABCN000007	TRANSISTOR	1	
	Q17101	B1ABCN000007	TRANSISTOR	1	
	Q17301	B1ABCN000007	TRANSISTOR	1	
	R1010	D0GA101JA015	M 100 OHM, J,1/16W	1	
	R1011	D0GA101JA015	M 100 OHM, J,1/16W	1	
	R1013	D0GA101JA015	M 100 OHM, J,1/16W	1	
	R1014	D0GA101JA015	M 100 OHM, J,1/16W	1	
	R1015	D0GA101JA015	M 100 OHM, J,1/16W	1	
	R1050	D0GA154JA023	M 150KOHM J 1/16W	1	
	R1056	D0GA220JA023	M22 OHM, J.1/16 W	1	
	R1100	D0GA122JA023	M 1.2KOHM, J,1/16W	1	
	R1101	D0GA473JA015	M 47KOHM, J,1/16W	1	
	R1102	D0GA683JA023	M 68KOHM, J,1/16W	1	
	R1115	D0GA103JA015	M 10KOHM,J,1/16W	1	
	R1117	D1BA7151A014	M7.15KOHM,J.1/16 W	1	
	R1118	D0GA102JA023	M1KOHM, J.1/16 W	1	
	R2051	D1BA6651A014	M6.65KOHM,J.1/16 W	1	PAVCTH
	R2128	D1BA7151A014	M7.15KOHM,J.1/16 W	1	

Safety	Ref. No.	Part No.	Part Name & Description	Q'ty	Remarks
	R2129	D1BA1432A014	M14.3KOHM,F.1/16 W	1	PAVCTH
	R2130	D1BA1741A014	M1.74KOHM,F.1/16 W	1	PAVCTH
	R2810	D0GB470JA065	M 47 OHM,J,1/10W	1	
	R2811	D0GB104JA065	M 100KOHM J 1/10W	1	
	R2812	D0GB224JA065	M 220KOHM,J,1/10W	1	
	R2813	D0GB223JA065	M 22KOHM,J,1/10W	1	
	R2814	D0GB103JA065	M 10K OHM J 1/10W	1	
	R2815	D0GB473JA065	M 47KOHM J. 1/10W	1	
	R2816	D1BB1621A055	M1.62KOHM,J.1/10W	1	
	R2817	D0GB223JA065	M 22KOHM,J,1/10W	1	
	R2818	D0GB473JA065	M 47KOHM J. 1/10W	1	
	R2819	D1BB4301A055	M4.30KOHM,J.1/10W	1	
	R3005	D0GBR00J0004	M 0 OHM J 1/10W	1	
	R3012	D0GA680JA023	M 68 OHM, J,1/16W	1	
	R3013	D0GA101JA015	M 100 OHM, J,1/16W	1	
	R3014	D0GA680JA023	M 68 OHM, J,1/16W	1	
	R3015	D0GA101JA015	M 100 OHM, J,1/16W	1	
	R3016	D0GA680JA023	M 68 OHM, J,1/16W	1	
	R3020	D0GA680JA023	M 68 OHM, J,1/16W	1	
	R3021	D0GA680JA023	M 68 OHM, J,1/16W	1	
	R3022	D0GA680JA023	M 68 OHM, J,1/16W	1	
	R3023	D0GA221JA023	M220 OHM, J.1/16 W	1	
	R3024	D0GA221JA023	M220 OHM, J.1/16 W	1	
	R3025	D0GA221JA023	M220 OHM, J.1/16 W	1	
	R3026	D0GA221JA023	M220 OHM, J.1/16 W	1	
	R3027	D0GA221JA023	M220 OHM, J.1/16 W	1	
	R3028	D0GA221JA023	M220 OHM, J.1/16 W	1	
	R3030	D0GAR00J0005	M 0 OHM, 1/16W	1	
	R3033	D0GA331JA023	M 330 OHM, J,1/16W	1	
	R3034	D0GA331JA023	M 330 OHM, J,1/16W	1	
	R3051	D0GA221JA023	M220 OHM, J.1/16 W	1	
	R3052	D0GA221JA023	M220 OHM, J.1/16 W	1	
	R3056	D0GA680JA023	M 68 OHM, J,1/16W	1	
	R3058	D0GA680JA023	M 68 OHM, J,1/16W	1	
	R3067	D0GAR00J0005	M 0 OHM, 1/16W	1	
	R3146	D0GA104JA023	M100KOHM, J.1/16 W	1	
	R3148	D0GA104JA023	M100KOHM, J.1/16 W	1	
	R3149	D0GA222JA023	M 2.2KOHM, J,1/16W	1	
	R3150	D0GA222JA023	M 2.2KOHM, J,1/16W	1	
	R3152	D0GA473JA015	M 47KOHM, J,1/16W	1	
	R3153	D0GA102JA023	M1KOHM, J.1/16 W	1	
	R3154	D0GA473JA015	M 47KOHM, J,1/16W	1	
	R3174	D0GA473JA015	M 47KOHM, J,1/16W	1	
	R3189	D1BB75R0A055	M 75 OHM,J.1/10W	1	
	R3192	D0GB393JA065	M 39K OHM J 1/10W	1	
	R3193	D0GB393JA065	M 39K OHM J 1/10W	1	
	R3194	D1BB75R0A055	M 75 OHM,J.1/10W	1	
	R3198	D1BB75R0A055	M 75 OHM,J.1/10W	1	
	R3202	D0GB393JA065	M 39K OHM J 1/10W	1	
	R3204	D0GB393JA065	M 39K OHM J 1/10W	1	
	R3205	D1BD75R0A066	M 75.0 OHM,F.1/8 W	1	
	R3206	D0GA393JA023	M 39KOHM,J,1/16W	1	
	R3207	D0GA393JA023	M 39KOHM,J,1/16W	1	
	R3209	D1BB75R0A055	M 75 OHM,J.1/10W	1	
	R3301	D1BD75R0A066	M 75.0 OHM,F.1/8 W	1	
	R3302	D1BD75R0A066	M 75.0 OHM,F.1/8 W	1	
	R3303	D1BD75R0A066	M 75.0 OHM,F.1/8 W	1	
	R3304	D0GDR00J0004	M 0 OHM, 1/8W	1	
	R3305	D0GDR00J0004	M 0 OHM, 1/8W	1	
	R3313	D0GA472JA023	M 4.7KOHM, J,1/16W	1	
	R3314	D0GA472JA023	M 4.7KOHM, J,1/16W	1	
	R3750	D0GA103JA015	M 10KOHM,J,1/16W	1	

Safety	Ref. No.	Part No.	Part Name & Description	Q'ty	Remarks
	R4512	D0GA220JA023	M22 OHM, J.1/16 W	1	
	R4513	D0GA151JA023	M 150 OHM, J,1/16W	1	
	R4514	D0GA151JA023	M 150 OHM, J,1/16W	1	
	R4515	D0GA151JA023	M 150 OHM, J,1/16W	1	
	R4517	D0GA102JA023	M1KOHM, J.1/16 W	1	
	R4521	D0GA560JA023	M 56 OHM, J,1/16W	1	
	R4525	D0GA103JA015	M 10KOHM,J,1/16W	1	
	R4555	D0GA473JA015	M 47KOHM, J,1/16W	1	
	R4556	D0GA473JA015	M 47KOHM, J,1/16W	1	
	R4560	D0GA273JA023	M 27K OHM J ,1/16W	1	
	R4602	D0GA103JA015	M 10KOHM,J,1/16W	1	
	R4608	D0GA103JA015	M 10KOHM,J,1/16W	1	
	R4609	D0GA103JA015	M 10KOHM,J,1/16W	1	
	R4611	D0GA102JA023	M1KOHM, J.1/16 W	1	
	R4612	D0GA473JA015	M 47KOHM, J,1/16W	1	
	R4615	D0GA103JA015	M 10KOHM,J,1/16W	1	
	R4621	D0GA103JA015	M 10KOHM,J,1/16W	1	
	R4622	D0GA103JA015	M 10KOHM,J,1/16W	1	
	R4624	D0GA473JA015	M 47KOHM, J,1/16W	1	
	R4625	D0GA102JA023	M1KOHM, J.1/16 W	1	
	R4631	D0GA103JA015	M 10KOHM,J,1/16W	1	
	R4635	D0GA103JA015	M 10KOHM,J,1/16W	1	
	R4637	D0GA473JA015	M 47KOHM, J,1/16W	1	
	R4638	D0GA103JA015	M 10KOHM,J,1/16W	1	
	R4639	D0GA102JA023	M1KOHM, J.1/16 W	1	
	R4646	D0GA680JA023	M 68 OHM, J,1/16W	1	
	R4647	D0GA680JA023	M 68 OHM, J,1/16W	1	
	R4648	D0GA680JA023	M 68 OHM, J,1/16W	1	
	R4649	D0GA680JA023	M 68 OHM, J,1/16W	1	
	R4650	D0GA680JA023	M 68 OHM, J,1/16W	1	
	R4651	D0GA680JA023	M 68 OHM, J,1/16W	1	
	R4657	D0GAR00J0005	M 0 OHM, 1/16W	1	
	R4661	D0GAR00J0005	M 0 OHM, 1/16W	1	
	R4665	D0GAR00J0005	M 0 OHM, 1/16W	1	
	R4691	D0GA473JA015	M 47KOHM, J,1/16W	1	
	R4692	D0GA473JA015	M 47KOHM, J,1/16W	1	
	R4693	D0GA473JA015	M 47KOHM, J,1/16W	1	
	R4802	D0GA103JA015	M 10KOHM,J,1/16W	1	(G)
	R4805	D0GAR00J0005	M 0 OHM, 1/16W	1	(G)
	R4806	D0GAR00J0005	M 0 OHM, 1/16W	1	(G)
	R4824	D0GA101JA015	M 100 OHM, J,1/16W	1	
	R4825	D0GA101JA015	M 100 OHM, J,1/16W	1	
	R4826	D0GAR00J0005	M 0 OHM, 1/16W	1	(G)
	R4901	EXB28V220J	M 22 OHM 1/32 W	1	
	R4903	D0GA102JA023	M1KOHM, J.1/16 W	1	
	R4904	D0GDR00J0004	M 0 OHM, 1/8W	1	
	R4906	D0GA472JA023	M 4.7KOHM, J,1/16W	1	
	R4909	D0GA103JA015	M 10KOHM,J,1/16W	1	
	R4910	D0GA272JA023	M 2.7KOHM, J.1/16W	1	
	R4911	D0GDR00J0004	M 0 OHM, 1/8W	1	
	R4930	D0GA392JA023	M 3.9KOHM, J,1/16W	1	
	R4931	D0GB221JA065	M 220 OHM J 1/10W	1	
	R4932	D0GA222JA023	M 2.2KOHM, J,1/16W	1	
	R4933	D0GA222JA023	M 2.2KOHM, J,1/16W	1	
	R4941	D1BB1403A055	M 140KOHM,J.1/10W	1	
	R4942	D1BB1403A055	M 140KOHM,J.1/10W	1	
	R4971	D0GA103JA015	M 10KOHM,J,1/16W	1	
	R4973	D0GA473JA015	M 47KOHM, J,1/16W	1	
	R4975	D0GA103JA015	M 10KOHM,J,1/16W	1	
	R4976	D0GA103JA015	M 10KOHM,J,1/16W	1	
	R4977	D0GA103JA015	M 10KOHM,J,1/16W	1	
	R4978	D0GA101JA015	M 100 OHM, J,1/16W	1	

Safety	Ref. No.	Part No.	Part Name & Description	Q'ty	Remarks
	R4979	D0GA473JA015	M 47KOHM, J,1/16W	1	
	R4980	D0GA103JA015	M 10KOHM,J,1/16W	1	
	R4982	D0GA101JA015	M 100 OHM, J,1/16W	1	
	R4983	D0GA101JA015	M 100 OHM, J,1/16W	1	
	R5000	D0GA102JA023	M1KOHM, J.1/16 W	1	
	R5009	D0GA103JA015	M 10KOHM,J,1/16W	1	
	R5010	D0GA222JA023	M 2.2KOHM, J,1/16W	1	
	R5011	D0GA104JA023	M100KOHM, J.1/16 W	1	
	R5012	D0GA223JA023	M 22K OHM J 1/16W	1	
	R5013	D0GA103JA015	M 10KOHM,J,1/16W	1	
	R5018	D0GA473JA015	M 47KOHM, J,1/16W	1	
	R5019	D0GA223JA023	M 22K OHM J 1/16W	1	
	R5212	D0GA473JA015	M 47KOHM, J,1/16W	1	
	R5350	D1BB5101A055	M 5.1KOHM,J.1/10W	1	
	R5351	D1BB1001A055	M 1KOHM,J. 1/10W	1	
	R5352	D0GD4R7JA059	M 4.7 OHM,J,1/4W	1	
	R5353	D0GB332JA065	M 3.3KOHM,J,1/10W	1	
	R5358	D0GF151JA048	M 150 OHM,J,1/3W	1	
	R5602	D0GA104JA023	M100KOHM, J.1/16 W	1	
	R5707	D0GDR00J0004	M 0 OHM, 1/8W	1	
	R5900	D0GB390JA065	M 39 OHM,J,1/10W	1	
	R5901	D1BB1002A055	M 10KOHM,J.1/10W	1	
	R5902	D1BB5362A055	M53.6KOHM,J.1/10W	1	
	R5904	D1BB3002A055	M 30KOHM,J.1/10W	1	
	R5905	D0GA470JA023	M 47 OHM, J,1/16W	1	
	R5906	D1BA4642A014	M46.4KOHM,J.1/16 W	1	
	R5907	D0GB363JA065	M 36K OHM J 1/10W	1	
	R5910	D0GA472JA023	M 4.7KOHM, J,1/16W	1	
	R5911	D0GA472JA023	M 4.7KOHM, J,1/16W	1	
	R5912	D0GA472JA023	M 4.7KOHM, J,1/16W	1	
	R5913	D0GA472JA023	M 4.7KOHM, J,1/16W	1	
	R5916	D0GA683JA023	M 68KOHM, J,1/16W	1	
	R5920	D0GDR00J0004	M 0 OHM, 1/8W	1	
	R6875	D0GA103JA015	M 10KOHM,J,1/16W	1	
	R8003	D0GBR00J0004	M 0 OHM J 1/10W	1	
	R8004	D0GAR00J0005	M 0 OHM, 1/16W	1	
	R8005	D0GAR00J0005	M 0 OHM, 1/16W	1	
	R8006	D0GBR00J0004	M 0 OHM J 1/10W	1	
	R8007	D0GAR00J0005	M 0 OHM, 1/16W	1	
	R8008	D0GA331JA023	M 330 OHM, J,1/16W	1	
	R8009	D0GBR00J0004	M 0 OHM J 1/10W	1	
	R8100	D1BB1271A087	M1.27KOHM,J.1/16W	1	
	R8102	D1BB2101A087	M 2.1KOHM,J.1/10W	1	
	R8104	D1BB8200A087	M 820 OHM,J.1/10W	1	
	R8106	D1BB2001A087	M 2KOHM,J.1/10W	1	
	R8108	D0GB100JA065	M 10 OHM J 1/10W	1	
	R8110	D0GB100JA065	M 10 OHM J 1/10W	1	
	R8114	D0GA303JA023	M 30K OHM J 0.063W	1	
	R8118	D0GA183JA023	M 18K OHM J.1/16W	1	
	R8200	D1BA2400A014	M 240 OHM,J.1/16 W	1	
	R8201	D1BA1001A014	M 1KOHM,F. 1/16 W	1	
	R8202	D1BA1001A014	M 1KOHM,F. 1/16 W	1	
	R8203	D1BA1001A014	M 1KOHM,F. 1/16 W	1	
	R8204	D1BA1001A014	M 1KOHM,F. 1/16 W	1	
	R8205	D1BA1001A014	M 1KOHM,F. 1/16 W	1	
	R8206	D1BA1001A014	M 1KOHM,F. 1/16 W	1	
	R8207	D1BA1001A014	M 1KOHM,F. 1/16 W	1	
	R8208	D1BA1001A014	M 1KOHM,F. 1/16 W	1	
	R8209	D0GA111JA023	M 110 OHM, J.1/16W	1	
	R8210	D0GA111JA023	M 110 OHM, J.1/16W	1	
	R8211	D1BA2400A014	M 240 OHM,J.1/16 W	1	
	R8212	D1BA2400A014	M 240 OHM,J.1/16 W	1	

Safety	Ref. No.	Part No.	Part Name & Description	Q'ty	Remarks
	R8213	D0GA103JA015	M 10KOHM,J,1/16W	1	
	R8214	D0GA103JA015	M 10KOHM,J,1/16W	1	
	R8215	D1BA2400A014	M 240 OHM,J.1/16 W	1	
	R8216	D1BA1001A014	M 1KOHM,F. 1/16 W	1	
	R8217	D1BA1001A014	M 1KOHM,F. 1/16 W	1	
	R8218	EXB28V220J	M 22 OHM 1/32 W	1	
	R8219	EXB28V220J	M 22 OHM 1/32 W	1	
	R8220	EXB28V220J	M 22 OHM 1/32 W	1	
	R8221	EXB28V220J	M 22 OHM 1/32 W	1	
	R8222	EXB28V220J	M 22 OHM 1/32 W	1	
	R8223	EXB28V220J	M 22 OHM 1/32 W	1	
	R8224	EXB28V220J	M 22 OHM 1/32 W	1	
	R8225	EXB28V220J	M 22 OHM 1/32 W	1	
	R8226	EXB28V220J	M 22 OHM 1/32 W	1	
	R8227	EXB28V220J	M 22 OHM 1/32 W	1	
	R8228	EXB28V220J	M 22 OHM 1/32 W	1	
	R8229	EXB28V220J	M 22 OHM 1/32 W	1	
	R8230	D0GA220JA023	M22 OHM, J.1/16 W	1	
	R8231	D0GA220JA023	M22 OHM, J.1/16 W	1	
	R8232	D0GA220JA023	M22 OHM, J.1/16 W	1	
	R8301	D0GA681JA023	M680 OHM, J,1/16W	1	
	R8302	D0GA360JA023	M 36 OHM, J,1/16W	1	
	R8303	D0GA360JA023	M 36 OHM, J,1/16W	1	
	R8304	D1BA6201A014	M 6.2KOHM,J.1/16 W	1	
	R8305	D1BA6201A014	M 6.2KOHM,J.1/16 W	1	
	R8307	D1BA6201A014	M 6.2KOHM,J.1/16 W	1	
	R8381	D1BA75R0A014	M 75 OHM,J.1/16 W	1	
	R8382	D1BA75R0A014	M 75 OHM,J.1/16 W	1	
	R8383	D1BA75R0A014	M 75 OHM,J.1/16 W	1	
	R8384	D1BA75R0A014	M 75 OHM,J.1/16 W	1	
	R8438	EXB2HV103JV	M 10 kOHM 1/16 W	1	
	R8439	D0GA680JA023	M 68 OHM, J,1/16W	1	
	R8440	D0GA680JA023	M 68 OHM, J,1/16W	1	
	R8531	D0GA103JA015	M 10KOHM,J,1/16W	1	
	R8532	D0GA103JA015	M 10KOHM,J,1/16W	1	
	R8533	D0GA103JA015	M 10KOHM,J,1/16W	1	
	R8534	D0GA103JA015	M 10KOHM,J,1/16W	1	
	R8536	D0GA272JA023	M 2.7KOHM, J.1/16W	1	
	R8540	D0GA272JA023	M 2.7KOHM, J.1/16W	1	
	R8541	D0GA103JA015	M 10KOHM,J,1/16W	1	
	R8542	D0GA103JA015	M 10KOHM,J,1/16W	1	
	R8552	EXB28VR000X	M 0 OHM 1/32 W	1	
	R8554	EXB28VR000X	M 0 OHM 1/32 W	1	
	R8606	D0GA472JA023	M 4.7KOHM, J,1/16W	1	
	R8607	D0GA472JA023	M 4.7KOHM, J,1/16W	1	
	R8608	D0GA272JA023	M 2.7KOHM, J.1/16W	1	
	R8609	D1BA6491A014	M6.49KOHM,J.1/16 W	1	
	R8610	D0GA221JA023	M220 OHM, J.1/16 W	1	
	R8615	D0GA105JA023	M 1M OHM, J,1/16W	1	
	R8622	D0GA103JA015	M 10KOHM,J,1/16W	1	
	R8624	D0GA560JA023	M 56 OHM, J,1/16W	1	
	R8625	D0GA560JA023	M 56 OHM, J,1/16W	1	
	R8626	D0GA560JA023	M 56 OHM, J,1/16W	1	
	R8627	D0GA560JA023	M 56 OHM, J,1/16W	1	
	R8628	D0GA560JA023	M 56 OHM, J,1/16W	1	
	R8629	D0GA560JA023	M 56 OHM, J,1/16W	1	
	R8630	D0GA560JA023	M 56 OHM, J,1/16W	1	
	R8631	D0GA560JA023	M 56 OHM, J,1/16W	1	
	R8632	EXB28V560JX	M 56 OHM 1/32 W	1	
	R8633	D0GA560JA023	M 56 OHM, J,1/16W	1	
	R8634	EXB28V560JX	M 56 OHM 1/32 W	1	
	R8636	D0GA220JA023	M22 OHM, J.1/16 W	1	

Safety	Ref. No.	Part No.	Part Name & Description	Q'ty	Remarks
	R8639	D0GA103JA015	M 10KOHM,J,1/16W	1	
	R8640	D0GA103JA015	M 10KOHM,J,1/16W	1	
	R8641	D0GBR00J0004	M 0 OHM J 1/10W	1	
	R8644	D0GBR00J0004	M 0 OHM J 1/10W	1	
	R8648	D0GA560JA023	M 56 OHM, J,1/16W	1	
	R8649	D0GA101JA015	M 100 OHM, J,1/16W	1	
	R8652	D0GA101JA015	M 100 OHM, J,1/16W	1	
	R8653	D0GA560JA023	M 56 OHM, J,1/16W	1	
	R8654	EXB28V560JX	M 56 OHM 1/32 W	1	
	R8655	D0GA560JA023	M 56 OHM, J,1/16W	1	
	R8656	D0GA560JA023	M 56 OHM, J,1/16W	1	
	R8657	D0GA560JA023	M 56 OHM, J,1/16W	1	
	R8658	D0GA560JA023	M 56 OHM, J,1/16W	1	
	R8659	D0GA560JA023	M 56 OHM, J,1/16W	1	
	R8660	D0GA560JA023	M 56 OHM, J,1/16W	1	
	R8665	D0GA560JA023	M 56 OHM, J,1/16W	1	
	R8666	D0GA272JA023	M 2.7KOHM, J.1/16W	1	
	R8667	EXB28VR000X	M 0 OHM 1/32 W	1	
	R8704	D1BB5362A055	M53.6KOHM,J.1/10W	1	
	R8705	D1BB1002A055	M 10KOHM,J.1/10W	1	
	R8706	D0GA390JA023	M 39 OHM, J,1/16W	1	
	R8707	D1BB1002A055	M 10KOHM,J.1/10W	1	
	R8708	D0GA103JA015	M 10KOHM,J,1/16W	1	
	R8709	D0GA103JA015	M 10KOHM,J,1/16W	1	
	R8710	D0GA103JA015	M 10KOHM,J,1/16W	1	
	R8711	D0GA103JA015	M 10KOHM,J,1/16W	1	
	R8712	D0GA103JA015	M 10KOHM,J,1/16W	1	
	R8713	D0GA103JA015	M 10KOHM,J,1/16W	1	
	R8740	D0GD472JA052	M 4.7KOHM,J,1/8W	1	
	R8741	D0GD472JA052	M 4.7KOHM,J,1/8W	1	
	R8751	D0GA222JA023	M 2.2KOHM, J,1/16W	1	
	R8752	D0GA332JA023	M 3.3KOHM, J,1/16W	1	
	R8753	D0GA102JA023	M1KOHM, J.1/16 W	1	
	R8754	D0GA103JA015	M 10KOHM,J,1/16W	1	
	R8755	D0GA104JA023	M100KOHM, J.1/16 W	1	
	R8756	D0GB390JA065	M 39 OHM,J,1/10W	1	
	R8757	D1BB4301A055	M4.30KOHM,J.1/10W	1	
	R8758	D1BB2402A055	M 24KOHM,J.1/10W	1	
	R8759	D1BB6041A055	M 6.04KOHM,J.1/10W	1	
	R8760	D0GA104JA023	M100KOHM, J.1/16 W	1	
	R8761	D0GA102JA023	M1KOHM, J.1/16 W	1	
	R8762	D0GD472JA052	M 4.7KOHM,J,1/8W	1	
	R8763	D0GD472JA052	M 4.7KOHM,J,1/8W	1	
	R8772	D0GA472JA023	M 4.7KOHM, J,1/16W	1	
	R8773	D0GA472JA023	M 4.7KOHM, J,1/16W	1	
	R8800	D0GA103JA015	M 10KOHM,J,1/16W	1	
	R8801	D0GA103JA015	M 10KOHM,J,1/16W	1	
	R8802	D0GA103JA015	M 10KOHM,J,1/16W	1	
	R8803	D0GA103JA015	M 10KOHM,J,1/16W	1	
	R8804	D0GA473JA015	M 47KOHM, J,1/16W	1	
	R8805	D0GA103JA015	M 10KOHM,J,1/16W	1	
	R8811	D0GA103JA015	M 10KOHM,J,1/16W	1	
	R8816	D0GA103JA015	M 10KOHM,J,1/16W	1	
	R8818	D0GA103JA015	M 10KOHM,J,1/16W	1	
	R8819	D0GA103JA015	M 10KOHM,J,1/16W	1	
	R8821	D0GA473JA015	M 47KOHM, J,1/16W	1	
	R8824	D0GA103JA015	M 10KOHM,J,1/16W	1	
	R8831	D0GA103JA015	M 10KOHM,J,1/16W	1	
	R8835	D0GA103JA015	M 10KOHM,J,1/16W	1	
	R8838	D0GA103JA015	M 10KOHM,J,1/16W	1	
	R8839	D0GAR00J0005	M 0 OHM, 1/16W	1	
	R8843	D0GA103JA015	M 10KOHM,J,1/16W	1	

Safety	Ref. No.	Part No.	Part Name & Description	Q'ty	Remarks
	R8846	D0GA273JA023	M 27K OHM J ,1/16W	1	
	R8847	D0GA243JA023	M 24K OHM J 0.063W	1	
	R8853	D0GA103JA015	M 10KOHM,J,1/16W	1	
	R8854	D0GA103JA015	M 10KOHM,J,1/16W	1	
	R8855	D0GA103JA015	M 10KOHM,J,1/16W	1	
	R8856	D0GA103JA015	M 10KOHM,J,1/16W	1	
	R8857	D0GA102JA023	M1KOHM, J.1/16 W	1	
	R8858	D0GA473JA015	M 47KOHM, J,1/16W	1	
	R8909	D0GA222JA023	M 2.2KOHM, J,1/16W	1	
	R8910	D0GA103JA015	M 10KOHM,J,1/16W	1	
	R8931	D0GA220JA023	M22 OHM, J.1/16 W	1	
	R8932	D0GA220JA023	M22 OHM, J.1/16 W	1	
	R8933	D0GA220JA023	M22 OHM, J.1/16 W	1	
	R8934	D0GA220JA023	M22 OHM, J.1/16 W	1	
	R8935	D0GA220JA023	M22 OHM, J.1/16 W	1	
	R8936	D0GA220JA023	M22 OHM, J.1/16 W	1	
	R8937	D0GA220JA023	M22 OHM, J.1/16 W	1	
	R8938	D0GA472JA023	M 4.7KOHM, J,1/16W	1	
	R8939	D0GA472JA023	M 4.7KOHM, J,1/16W	1	
	R8940	EXB2HV470JV	M 47 OHM 1/16 W	1	
	R8941	D0GAR00J0005	M 0 OHM, 1/16W	1	
	R8942	D0GA101JA015	M 100 OHM, J,1/16W	1	
	R8943	D0GAR00J0005	M 0 OHM, 1/16W	1	
	R8944	EXB28V560JX	M 56 OHM 1/32 W	1	
	R8950	D0GA473JA015	M 47KOHM, J,1/16W	1	
	R8953	D0GA272JA023	M 2.7KOHM, J.1/16W	1	
	R8954	D0GA272JA023	M 2.7KOHM, J.1/16W	1	
	R8955	D0GA272JA023	M 2.7KOHM, J.1/16W	1	
	R8956	D0GA272JA023	M 2.7KOHM, J.1/16W	1	
	R8957	D0GA272JA023	M 2.7KOHM, J.1/16W	1	
	R8958	D0GA272JA023	M 2.7KOHM, J.1/16W	1	
	R8959	D0GA272JA023	M 2.7KOHM, J.1/16W	1	
	R8960	D0GA272JA023	M 2.7KOHM, J.1/16W	1	
	R8961	EXB28V332J	M 3.3 KOHM 1/32 W	1	
	R8967	D0GA102JA023	M1KOHM, J.1/16 W	1	
	R8968	D0GA473JA015	M 47KOHM, J,1/16W	1	
	R8969	D0GA101JA015	M 100 OHM, J,1/16W	1	
	R8970	D0GA101JA015	M 100 OHM, J,1/16W	1	
	R8972	D0GA103JA015	M 10KOHM,J,1/16W	1	
	R8973	D0GA103JA015	M 10KOHM,J,1/16W	1	
	R8974	D0GA103JA015	M 10KOHM,J,1/16W	1	
	R8975	D0GA103JA015	M 10KOHM,J,1/16W	1	
	R9035	D0GA332JA023	M 3.3KOHM, J,1/16W	1	
	R9052	D0GAR00J0005	M 0 OHM, 1/16W	1	
	R9105	D0GA473JA015	M 47KOHM, J,1/16W	1	
	R9198	EXB28V101JX	M 100 OHM 1/32 W	1	
	R9203	D0GA272JA023	M 2.7KOHM, J.1/16W	1	
	R9205	D0GA333JA023	M 33KOHM,J,1/16W	1	
	R9206	D0GA563JA023	M 56KOHM, J,0.063W	1	
	R9208	EXB2HV470JV	M 47 OHM 1/16 W	1	
	R9209	EXB2HV470JV	M 47 OHM 1/16 W	1	
	R9224	D0GA470JA023	M 47 OHM, J,1/16W	1	
	R9226	D0GA470JA023	M 47 OHM, J,1/16W	1	
	R9247	D0GA470JA023	M 47 OHM, J,1/16W	1	
	R9307	D0GA470JA023	M 47 OHM, J,1/16W	1	
	R9308	D0GA470JA023	M 47 OHM, J,1/16W	1	
	R9320	D0GA331JA023	M 330 OHM, J,1/16W	1	
	R9321	D0GA105JA023	M 1M OHM, J,1/16W	1	
	R9324	D0GB122JA065	M 1.2KOHM J 1/10W	1	
	R9325	D0GB122JA065	M 1.2KOHM J 1/10W	1	
	R9326	D0GB122JA065	M 1.2KOHM J 1/10W	1	
	R9327	D0GB122JA065	M 1.2KOHM J 1/10W	1	

Safety	Ref. No.	Part No.	Part Name & Description	Q'ty	Remarks
	R9329	D0GA102JA023	M1KOHM, J.1/16 W	1	
	R9330	D0GA102JA023	M1KOHM, J.1/16 W	1	
	R9400	EXB2HV103JV	M 10 kOHM 1/16 W	1	
	R9401	EXB2HV103JV	M 10 kOHM 1/16 W	1	
	R9402	EXB28V103JX	M 10KOHM 1/32 W	1	
	R9608	EXB2HV470JV	M 47 OHM 1/16 W	1	
	R9609	EXB28V470JX	M 47 OHM 1/32 W	1	
	R9610	EXB28V470JX	M 47 OHM 1/32 W	1	
	R9611	EXB28V470JX	M 47 OHM 1/32 W	1	
	R9820	D0GDR00J0004	M 0 OHM, 1/8W	1	
	R9860	D1BB1101A055	M 1.1 KOHM,J.1/10W	1	
	R9861	D1BB1911A074	M1.91 KOHM,J.1/10W	1	
	R9862	D1BB3601A055	M 3.6KOHM,J.1/10W	1	
	R9863	D1BB8200A087	M 820 OHM,J.1/10W	1	
	R9864	D0GB100JA065	M 10 OHM J 1/10W	1	
	R9865	D0GB100JA065	M 10 OHM J 1/10W	1	
	R9866	D0GA153JA023	M 15K OHM J 1/16W	1	
	R9867	D0GA273JA023	M 27K OHM J ,1/16W	1	
	R9907	D0GA101JA015	M 100 OHM, J,1/16W	1	
	R9909	D0GAR00J0005	M 0 OHM, 1/16W	1	
	R16001	D0GF7R5JA047	M 7.5 OHM,J, 1/3W	1	
	R16002	D0GF7R5JA047	M 7.5 OHM,J, 1/3W	1	
	R16021	D0GF7R5JA047	M 7.5 OHM,J, 1/3W	1	
	R16022	D0GF7R5JA047	M 7.5 OHM,J, 1/3W	1	
	R16031	D0GF473JA048	M 47KOHM,J,1/3W	1	
	R16032	D0GF473JA048	M 47KOHM,J,1/3W	1	
	R16041	D0GF5R6JA047	M 5.6 OHM,J, 1/3W	1	
	R16051	D0GF5R6JA047	M 5.6 OHM,J, 1/3W	1	
	R16101	D0GD150JA059	M 15 OHM,J,1/4W	1	
	R16102	D0GD150JA059	M 15 OHM,J,1/4W	1	
	R16105	D0GF474JA048	M 470KOHM,J,1/3W	1	
	R16116	D0GB473JA065	M 47KOHM J. 1/10W	1	
	R16130	D0GB103JA065	M 10K OHM J 1/10W	1	
	R16131	D0GB220JA065	M 22 OHM J 1/10W	1	
	R16132	D0GB101JA065	M 100 OHM,J,1/10W	1	
	R16133	D1BD2700A044	M 270 OHM,J.1/8 W	1	
	R16134	D0GD750JA059	M 75 OHM,J,1/4W	1	
	R16135	D0GB4R7JA065	M 4.7 OHM J 1/10W	1	
	R16137	D0GZ1R0JA020	M 1 OHM, J,1/2W	1	
	R16138	D0GF561JA047	M 560 OHM,J, 1/3W	1	
	R16141	D0GD100JA059	M 10 OHM,J,1/4W	1	
	R16143	D0GB473JA065	M 47KOHM J. 1/10W	1	
	R16151	D0GB220JA065	M 22 OHM J 1/10W	1	
	R16152	D0GB220JA065	M 22 OHM J 1/10W	1	
	R16153	D0GB331JA065	M330 OHM J 1/10W	1	
	R16154	D0GD750JA059	M 75 OHM,J,1/4W	1	
	R16155	D0GB4R7JA065	M 4.7 OHM J 1/10W	1	
	R16161	D0GD100JA059	M 10 OHM,J,1/4W	1	
	R16163	D0GB473JA065	M 47KOHM J. 1/10W	1	
	R16171	D0GD100JA059	M 10 OHM,J,1/4W	1	
	R16173	D0GB473JA065	M 47KOHM J. 1/10W	1	
	R16181	D0GD100JA059	M 10 OHM,J,1/4W	1	
	R16183	D0GB473JA065	M 47KOHM J. 1/10W	1	
	R16191	D1BD2700A044	M 270 OHM,J.1/8 W	1	
	R16192	D0GB103JA065	M 10K OHM J 1/10W	1	
	R16193	D0GD750JA052	M 75 OHM,J,1/8W	1	
	R16195	D0GF1R0JA047	M 1 OHM,J,1/3W	1	
	R16196	D0GF102JA048	M 1.0 KOHM,J,1/3W	1	
	R16197	D0GB220JA065	M 22 OHM J 1/10W	1	
	R16230	D0GD470JA052	M 47 OHM,J,1/8W	1	
	R16231	D0GB472JA065	M 4.7KOHM, J,1/10W	1	
	R16241	EXB38V470J	M 47 OHM 1/16 W	1	

Safety	Ref. No.	Part No.	Part Name & Description	Q'ty	Remarks
	R16242	EXB38V472JV	M 4.7 kOHM 1/16 W	1	
	R16243	D0GB103JA065	M 10K OHM J 1/10W	1	
	R16244	D0GB273JA065	M 27K OHM J 1/10W	1	
	R16245	D0GB472JA065	M 4.7KOHM, J,1/10W	1	
	R16246	D0GD222JA052	M 2.2KOHM,J,1/8W	1	
	R16252	D0GF563JA048	M 56 KOHM,J,1/3W	1	
	R16253	D1BD1003A044	M 100KOHM,J.1/8 W	1	
	R16254	D1BD4422A044	M44.2KOHM,F.1/8W	1	
	R16255	D0GB103JA065	M 10K OHM J 1/10W	1	
	R16257	D0GB473JA065	M 47KOHM J. 1/10W	1	
	R16281	D0GB103JA065	M 10K OHM J 1/10W	1	
	R16282	D0GD221JA052	M 220 OHM,J 1/8W	1	
	R16283	D0GB473JA065	M 47KOHM J. 1/10W	1	
	R16284	D0GB224JA065	M 220KOHM,J,1/10W	1	
	R16285	EXB38V623J	M 62 kOHM 1/16 W	1	
	R16288	D0GF334JA047	M 330KOHMJ,1/3W	1	
	R16289	D0GF334JA047	M 330KOHMJ,1/3W	1	
	R16290	D0GF334JA047	M 330KOHMJ,1/3W	1	
	R16307	D1BD5232A077	M52.3KOHM,D.1/10W	1	PAVCTH
	R16309	ERG2FJS563D	M 56KOHM, J, 2W	1	
	R16310	ERG2FJS563D	M 56KOHM, J, 2W	1	
	R16311	ERG2FJS563D	M 56KOHM, J, 2W	1	
	R16317	D1BD5762A077	M57.6KOHM,D.1/10W	1	
	R16318	D1BD5762A077	M57.6KOHM,D.1/10W	1	
	R16319	D1BD2491A077	M 2.49KOHM,D.1/10W	1	
	R16320	ERJ14YJ683	M 68KOHM, J. 1/4W	1	
	R16330	D0GB102JA065	M 1KOHM,J,1/10W	1	
	R16332	D0GB474JA065	M 470KOHM,J,1/10W	1	
	R16334	D0GB472JA065	M 4.7KOHM, J,1/10W	1	
	R16335	D0GB102JA065	M 1KOHM,J,1/10W	1	
	R16402	D0GF7R5JA047	M 7.5 OHM,J, 1/3W	1	
	R16403	D0GF7R5JA047	M 7.5 OHM,J, 1/3W	1	
	R16411	D1BD2700A044	M 270 OHM,J.1/8 W	1	
	R16412	D1BD2700A044	M 270 OHM,J.1/8 W	1	
	R16414	D0GB103JA065	M 10K OHM J 1/10W	1	
	R16416	D0GB103JA065	M 10K OHM J 1/10W	1	
	R16422	D0GF7R5JA047	M 7.5 OHM,J, 1/3W	1	
	R16423	D0GF7R5JA047	M 7.5 OHM,J, 1/3W	1	
	R16441	D0GF5R6JA047	M 5.6 OHM,J, 1/3W	1	
	R16451	D0GF5R6JA047	M 5.6 OHM,J, 1/3W	1	
	R16466	D0GF473JA048	M 47KOHM,J,1/3W	1	
	R16467	D0GF473JA048	M 47KOHM,J,1/3W	1	
	R16471	D0GB392JA065	M 3.9KOHM,J,1/10W	1	
	R16472	D0GB222JA065	M 2.2KOHM,J,1/10W	1	
	R16473	D0GD561JA052	M 560 OHM,J,1/8W	1	
	R16474	D0GB102JA065	M 1KOHM,J,1/10W	1	
	R16475	D0GB472JA065	M 4.7KOHM, J,1/10W	1	
	R16476	D0GB222JA065	M 2.2KOHM,J,1/10W	1	
	R16478	D0GB562JA065	M 5.6KOHM,J,1/10W	1	
	R16479	D0GD103JA052	M 10KOHM,J,1/8W	1	
	R16490	D1BD1203A077	M 120KOHM,D.1/10W	1	
	R16491	D1BD1203A077	M 120KOHM,D.1/10W	1	
	R16492	D1BD1203A077	M 120KOHM,D.1/10W	1	
	R16493	D1BD5111A077	M5.11KOHM.J.1/8 W	1	
	R16494	D1BB2001A055	M 2KOHM,J.1/10W	1	
	R16497	D0GB473JA065	M 47KOHM J. 1/10W	1	
	R16498	D0GB103JA065	M 10K OHM J 1/10W	1	
	R16501	D0GB220JA065	M 22 OHM J 1/10W	1	
	R16503	D0GD100JA059	M 10 OHM,J,1/4W	1	
	R16505	D0GF102JA048	M 1.0 KOHM,J,1/3W	1	
	R16506	D0GD100JA059	M 10 OHM,J,1/4W	1	
	R16507	D0GB220JA065	M 22 OHM J 1/10W	1	

Safety	Ref. No.	Part No.	Part Name & Description	Q'ty	Remarks
	R16508	D0GB220JA065	M 22 OHM J 1/10W	1	
	R16512	D0GB473JA065	M 47KOHM J. 1/10W	1	
	R16515	D0D52R2KA005	M 2.2 OHM,J,5W	1	
	R16517	D0GB473JA065	M 47KOHM J. 1/10W	1	
	R16522	D0GB101JA065	M 100 OHM,J,1/10W	1	
	R16525	D0GB4R7JA065	M 4.7 OHM J 1/10W	1	
	R16526	D0GB4R7JA065	M 4.7 OHM J 1/10W	1	
	R16531	D0GD100JA059	M 10 OHM,J,1/4W	1	
	R16532	D0GB473JA065	M 47KOHM J. 1/10W	1	
	R16534	D0GF561JA047	M 560 OHM,J, 1/3W	1	
	R16536	D0GF1R0JA047	M 1 OHM,J,1/3W	1	
	R16537	D0GF1R0JA047	M 1 OHM,J,1/3W	1	
	R16551	D0GD100JA059	M 10 OHM,J,1/4W	1	
	R16552	D0GB473JA065	M 47KOHM J. 1/10W	1	
	R16561	EXB38V470J	M 47 OHM 1/16 W	1	
	R16562	EXB38V470J	M 47 OHM 1/16 W	1	
	R16563	EXB38V470J	M 47 OHM 1/16 W	1	
	R16564	EXB38V470J	M 47 OHM 1/16 W	1	
	R16565	EXB38V472JV	M 4.7 kOHM 1/16 W	1	
	R16566	EXB38V472JV	M 4.7 kOHM 1/16 W	1	
	R16567	EXB38V472JV	M 4.7 kOHM 1/16 W	1	
	R16568	EXB38V472JV	M 4.7 kOHM 1/16 W	1	
	R16570	EXB38V472JV	M 4.7 kOHM 1/16 W	1	
	R16573	D0GB103JA065	M 10K OHM J 1/10W	1	
	R16574	D0GB103JA065	M 10K OHM J 1/10W	1	
	R16575	D0GB751JA065	M750 OHM J 1/10W	1	
	R16576	D0GB101JA065	M 100 OHM,J,1/10W	1	
	R16579	EXB38V470J	M 47 OHM 1/16 W	1	
	R16581	D0GB103JA065	M 10K OHM J 1/10W	1	
	R16582	D0GF563JA048	M 56 KOHM,J,1/3W	1	
	R16583	D1BD1003A044	M 100KOHM,J.1/8 W	1	
	R16584	D1BD4422A044	M44.2KOHM,F.1/8W	1	
	R16585	D0GB473JA065	M 47KOHM J. 1/10W	1	
	R16587	D0GB222JA065	M 2.2KOHM,J,1/10W	1	
	R16588	D0GB223JA065	M 22KOHM,J,1/10W	1	
	R16590	D0GB221JA065	M 220 OHM J 1/10W	1	
	R16591	EXB38V472JV	M 4.7 kOHM 1/16 W	1	
	R16594	D0GB472JA065	M 4.7KOHM, J,1/10W	1	
	R16601	D0GF1R0JA047	M 1 OHM,J,1/3W	1	
	R16604	D0GD331JA052	M 330 OHM,J,1/8W	1	
	R16605	D0GD220JA059	M 22 OHM,J,1/4W	1	
	R16606	D0GD223JA052	M 22KOHM,J,1/8W	1	
	R16607	D1BB5111A055	M5.11KOHM,J.1/10W	1	
	R16608	ERG2FJS153D	M 15KOHM, J, 2W	1	
	R16609	D0GF102JA047	M 1.0 KOHM,J,1/3W	1	
	R16610	D0GB104JA065	M 100KOHM J 1/10W	1	
	R16612	D0GD220JA059	M 22 OHM,J,1/4W	1	
	R16615	D1BB1871A055	M1.87KOHM, 1/10W	1	
	R16617	D0GD222JA052	M 2.2KOHM,J,1/8W	1	
	R16622	D0GD221JA052	M 220 OHM,J 1/8W	1	
	R16623	D0GD221JA052	M 220 OHM,J 1/8W	1	
	R16631	D0GB103JA065	M 10K OHM J 1/10W	1	
	R16633	D0GD223JA052	M 22KOHM,J,1/8W	1	
	R16634	D0GD222JA052	M 2.2KOHM,J,1/8W	1	
	R16645	D0GB562JA065	M 5.6KOHM,J,1/10W	1	
	R16646	D1BD8660A044	M 866 OHM,F.1/8W	1	
	R16648	D0GF102JA047	M 1.0 KOHM,J,1/3W	1	
	R16649	D0GD330JA059	M 33 OHM,F,1/4W	1	
	R16650	D0GB104JA065	M 100KOHM J 1/10W	1	
	R16653	D0GD222JA052	M 2.2KOHM,J,1/8W	1	
	R16654	D0GD470JA052	M 47 OHM,J,1/8W	1	
	R16658	D1BD6491A077	M6.49KOHM,D.1/10W	1	

Safety	Ref. No.	Part No.	Part Name & Description	Q'ty	Remarks
	R16661	D0GD100JA059	M 10 OHM,J,1/4W	1	
	R16662	D1BB1002A087	M 10KOHM,J.1/10W	1	
	R16663	D1BD9091A077	M 9.09KOHM,D.1/10W	1	
	R16664	D0GF102JA047	M 1.0 KOHM,J,1/3W	1	
	R16665	D0GD222JA052	M 2.2KOHM,J,1/8W	1	
	R16666	D1BB1003A087	M100KOHM,D 1/10W	1	
	R16668	D0GF102JA047	M 1.0 KOHM,J,1/3W	1	
	R16675	D0GB103JA065	M 10K OHM J 1/10W	1	
	R16676	D1BD2700A044	M 270 OHM,J.1/8 W	1	
	R16678	D0GF102JA047	M 1.0 KOHM,J,1/3W	1	
	R16682	D0GD100JA059	M 10 OHM,J,1/4W	1	
	R16683	D0GD100JA059	M 10 OHM,J,1/4W	1	
	R16684	D0GB220JA065	M 22 OHM J 1/10W	1	
	R16685	D1BD1500A044	M 150 OHM,J.1/8 W	1	
	R16686	D0GB103JA065	M 10K OHM J 1/10W	1	
	R16719	D0GB220JA065	M 22 OHM J 1/10W	1	
	R16721	EXB38V220JV	M 22 OHM 1/16 W	1	
	R16761	D0GD100JA059	M 10 OHM,J,1/4W	1	
	R16763	D0GB473JA065	M 47KOHM J. 1/10W	1	
	R16772	D0GB472JA065	M 4.7KOHM, J,1/10W	1	
	R16773	D0GD102JA052	M 1.0KOHM,J,1/8W	1	
	R16776	D0GD470JA052	M 47 OHM,J,1/8W	1	
	R16786	D1BD5902A044	M 59KOHM,F.1/8W	1	
	R16791	D0GB102JA065	M 1KOHM,J,1/10W	1	
	R16797	D0GD220JA052	M 22 OHM,J,1/8W	1	
	R16798	D0GB222JA065	M 2.2KOHM,J,1/10W	1	
	R16799	D0GB102JA065	M 1KOHM,J,1/10W	1	
	R16815	D0GB103JA065	M 10K OHM J 1/10W	1	
	R16818	D1BB3302A055	M 33KOHM,J.1/10W	1	
	R16819	D1BD1503A044	M 150KOHM.F.1/8W	1	PAVCTH
	R16820	D1BD1503A044	M 150KOHM.F.1/8W	1	PAVCTH
	R16822	D1BD8202A044	M 82KOHM,J.1/8 W	1	
	R16823	D1BD6192A044	M61.9KOHM,J.1/8 W	1	
	R16824	D1BD3742A044	M37.4KOHM,F.1/8W	1	
	R16825	D0GD154JA059	M 150KOHM,J,1/4W	1	
	R16826	D0GB103JA065	M 10K OHM J 1/10W	1	
	R16829	D0GB102JA065	M 1KOHM,J,1/10W	1	
	R16831	D1BD6812A077	M68.1KOHM,D.1/10W	1	
	R16832	D1BD7152A077	M71.5K0OHM,D.1/10W	1	
	R16833	ERG1SJ683	M 68KOHM, J, 1W	1	
	R16834	ERG1SJ683	M 68KOHM, J, 1W	1	
	R16838	ERG2FJS104D	M 100KOHM, J, 2W	1	
	R16841	D0GB472JA065	M 4.7KOHM, J,1/10W	1	
	R16842	D0GD102JA052	M 1.0KOHM,J,1/8W	1	
	R16844	ERA6YEB242	M 2.4KOHM, B 1/10W	1	
	R16845	D1BD6812A077	M68.1KOHM,D.1/10W	1	
	R16846	D1BD5762A077	M57.6KOHM,D.1/10W	1	
	R16847	D1BD6492A077	M64.9KOHM,D.1/10W	1	
	R16851	D0GB474JA065	M 470KOHM,J,1/10W	1	
	R16852	D0GB474JA065	M 470KOHM,J,1/10W	1	
	R16856	D0GB102JA065	M 1KOHM,J,1/10W	1	
	R16873	ERA6YEB242	M 2.4KOHM, B 1/10W	1	
	R16891	D1BF6982A058	M 69.8KOHM, 1/4W	1	
	R16892	D1BF8252A058	M82.50KOHM, 1/4W	1	
	R16893	D1BF8252A058	M82.50KOHM, 1/4W	1	
	R16894	D1BB3091A087	M3.09KOHM,D 1/16W	1	
	R16895	D1BB9091A087	M9.09 KOHM,J.1/10W	1	
	R16897	D1BB2262A055	M22.6KOHM F 1/10W	1	
	R16898	D1BB1051A055	M1.05KOHM,J.1/10W	1	
	R16899	D1BB1372A055	M13.7KOHM, 1/10W	1	
	R16900	D1BB3831A055	M3.83KOHM,D 1/16W	1	
	R16902	D0GB6R2JA065	M 6.2 OHM J 1/10W	1	

Safety	Ref. No.	Part No.	Part Name & Description	Q'ty	Remarks
	R16919	D1BB1582A055	M15.8KOHM, 1/10W	1	
	R16920	D0GB101JA065	M 100 OHM,J,1/10W	1	
	R16921	D1BB2152A055	M 21.5KOHM, 1/10W	1	
	R16922	D1BB9531A055	M9.53KOHM,J.1/10W	1	
	R16923	D1BB5111A055	M5.11KOHM,J.1/10W	1	
	R16924	D1BB1152A055	M 11.5KOHM 1/10W	1	
	R16931	D1BF2R70A021	M 2.7 OHM, 1/4W	1	
	R16932	D0GD223JA052	M 22KOHM,J,1/8W	1	
	R16937	D0GB184JA065	M 180KOHM J 1/10W	1	
	R16939	D0GD102JA052	M 1.0KOHM,J,1/8W	1	
	R16940	D0GB473JA065	M 47KOHM J. 1/10W	1	
	R16941	D0GB472JA065	M 4.7KOHM, J,1/10W	1	
	R16942	D0GB473JA065	M 47KOHM J. 1/10W	1	
	R16945	D0GB471JA065	M 470 OHM,J,1/10W	1	
	R17101	D0GB101JA065	M 100 OHM,J,1/10W	1	
	R17102	D0GB101JA065	M 100 OHM,J,1/10W	1	
	R17103	D0GB101JA065	M 100 OHM,J,1/10W	1	
	R17104	D1BB49R90002	M 49 OHM,J.1/10W	1	
	R17105	D1BB49R90002	M 49 OHM,J.1/10W	1	
	R17106	D1BB49R90002	M 49 OHM,J.1/10W	1	
	R17107	D0GB101JA065	M 100 OHM,J,1/10W	1	
	R17108	D1BB49R90002	M 49 OHM,J.1/10W	1	
	R17110	D0GF223JA047	M 22KOHM,J, 1/3W	1	PAVCTH
	R17111	D0GB331JA065	M330 OHM J 1/10W	1	
	R17112	D0GB102JA065	M 1KOHM,J,1/10W	1	
	R17131	D0GZ1R0JA020	M 1 OHM, J,1/2W	1	
	R17133	D0GZ1R0JA020	M 1 OHM, J,1/2W	1	
	R17135	D0GZ1R0JA020	M 1 OHM, J,1/2W	1	
	R17145	D0GBR00J0004	M 0 OHM J 1/10W	1	
	R17146	D0GBR00J0004	M 0 OHM J 1/10W	1	
	R17161	D0GBR00J0004	M 0 OHM J 1/10W	1	
	R17162	D0GBR00J0004	M 0 OHM J 1/10W	1	
	R17164	D0GB470JA065	M 47 OHM,J,1/10W	1	
	R17165	D1BB49R90002	M 49 OHM,J.1/10W	1	
	R17166	D1BB49R90002	M 49 OHM,J.1/10W	1	
	R17167	D1BB49R90002	M 49 OHM,J.1/10W	1	
	R17168	D1BB49R90002	M 49 OHM,J.1/10W	1	
	R17196	D0GB102JA065	M 1KOHM,J,1/10W	1	
	R17198	D0GD224JA052	M 220KOHM,J,1/8W	1	
	R17199	D0GF102JA047	M 1.0 KOHM,J,1/3W	1	
	R17201	D0GB101JA065	M 100 OHM,J,1/10W	1	
	R17202	D0GB101JA065	M 100 OHM,J,1/10W	1	
	R17203	D0GB101JA065	M 100 OHM,J,1/10W	1	
	R17204	D0GB101JA065	M 100 OHM,J,1/10W	1	
	R17205	D0GB101JA065	M 100 OHM,J,1/10W	1	
	R17206	D0GB101JA065	M 100 OHM,J,1/10W	1	
	R17207	D0GB101JA065	M 100 OHM,J,1/10W	1	
	R17208	D0GB101JA065	M 100 OHM,J,1/10W	1	
	R17209	D0GB101JA065	M 100 OHM,J,1/10W	1	
	R17210	D0GB101JA065	M 100 OHM,J,1/10W	1	
	R17211	D0GB101JA065	M 100 OHM,J,1/10W	1	
	R17212	D0GB101JA065	M 100 OHM,J,1/10W	1	
	R17231	D0GZ1R0JA020	M 1 OHM, J,1/2W	1	
	R17233	D0GZ1R0JA020	M 1 OHM, J,1/2W	1	
	R17235	D0GZ1R0JA020	M 1 OHM, J,1/2W	1	
	R17237	D0GZ1R0JA020	M 1 OHM, J,1/2W	1	
	R17239	D0GZ1R0JA020	M 1 OHM, J,1/2W	1	
	R17241	D0GZ1R0JA020	M 1 OHM, J,1/2W	1	
	R17262	D0GB470JA065	M 47 OHM,J,1/10W	1	
	R17263	D0GB681JA065	M 680 OHM,J,1/10W	1	
	R17264	D0GB681JA065	M 680 OHM,J,1/10W	1	
	R17268	D0GD224JA052	M 220KOHM,J,1/8W	1	

Safety	Ref. No.	Part No.	Part Name & Description	Q'ty	Remarks
	R17270	EXB38V470J	M 47 OHM 1/16 W	1	
	R17271	EXB38V470J	M 47 OHM 1/16 W	1	
	R17272	EXB38V681J	M 680 OHM 1/16 W	1	
	R17301	D0GB101JA065	M 100 OHM,J,1/10W	1	
	R17302	D0GB101JA065	M 100 OHM,J,1/10W	1	
	R17303	D0GB101JA065	M 100 OHM,J,1/10W	1	
	R17304	D0GB101JA065	M 100 OHM,J,1/10W	1	
	R17305	D0GB101JA065	M 100 OHM,J,1/10W	1	
	R17306	D0GB101JA065	M 100 OHM,J,1/10W	1	
	R17307	D0GB101JA065	M 100 OHM,J,1/10W	1	
	R17308	D0GB101JA065	M 100 OHM,J,1/10W	1	
	R17309	D0GB101JA065	M 100 OHM,J,1/10W	1	
	R17310	D0GB101JA065	M 100 OHM,J,1/10W	1	
	R17311	D0GB101JA065	M 100 OHM,J,1/10W	1	
	R17312	D0GB101JA065	M 100 OHM,J,1/10W	1	
	R17313	D0GB331JA065	M330 OHM J 1/10W	1	
	R17314	D0GB102JA065	M 1KOHM,J,1/10W	1	
	R17315	D0GF223JA047	M 22KOHM,J, 1/3W	1	PAVCTH
	R17331	D0GZ1R0JA020	M 1 OHM, J,1/2W	1	
	R17333	D0GZ1R0JA020	M 1 OHM, J,1/2W	1	
	R17335	D0GZ1R0JA020	M 1 OHM, J,1/2W	1	
	R17337	D0GZ1R0JA020	M 1 OHM, J,1/2W	1	
	R17339	D0GZ1R0JA020	M 1 OHM, J,1/2W	1	
	R17341	D0GZ1R0JA020	M 1 OHM, J,1/2W	1	
	R17361	D0GB681JA065	M 680 OHM,J,1/10W	1	
	R17362	D0GB681JA065	M 680 OHM,J,1/10W	1	
	R17366	EXB38V470J	M 47 OHM 1/16 W	1	
	R17367	EXB38V470J	M 47 OHM 1/16 W	1	
	R17368	EXB38V470J	M 47 OHM 1/16 W	1	
	R17369	EXB38V470J	M 47 OHM 1/16 W	1	
	R17370	EXB38V681J	M 680 OHM 1/16 W	1	
	R17371	EXB38V681J	M 680 OHM 1/16 W	1	
	R17372	EXB38V681J	M 680 OHM 1/16 W	1	
	R17398	D0GD224JA052	M 220KOHM,J,1/8W	1	
	R17399	D0GF102JA047	M 1.0 KOHM,J,1/3W	1	
	RM2810	B3RAD0000168	REMOTE SENSOR	1	
	SC2	K1KY02B00012	2P CONNECTOR	1	
	SC20	K1MY35BA0345	35P CONNECTOR	1	
	SC41	K1KA09AA0707	9P CONNECTOR	1	
	SC42	K1KA09AA0707	9P CONNECTOR	1	
	SC46	K1KA09AA0707	9P CONNECTOR	1	
	SC50	K1KA02AA0193	2P CONNECTOR	1	
	SN2810	B3JB00000078	IC	1	
	SS11	K1KY03B00006	3P CONNECTOR	1	
	SS33	K1MY20BA0345	20P CONNECTOR	1	
	SS53	K1MN13B00091	13P CONNECTOR	1	
	SS54	K1MN13B00091	13P CONNECTOR	1	
	SS56	K1MN13B00091	13P CONNECTOR	1	
	SW2050	K0H1BA000445	SWITCH	1	
	SW2051	K0H1BA000445	SWITCH	1	
	SW2052	K0H1BA000445	SWITCH	1	
	SW2053	K0H1BA000445	SWITCH	1	
	SW2054	K0H1BA000445	SWITCH	1	
	SW2057	K0F122A00031	SWITCH	1	
	T8301	G5BYC0000015	TRANS	1	
	T16471	G4DYA0000253	SWITCHING TRANS	1	

Safety	Ref. No.	Part No.	Part Name & Description	Q'ty	Remarks
	T16472	G4DYA0000252	SWITCHING TRANS	1	
⚠	TU4801	ENGS7302D5F	TUNER	1	(G)
⚠	TU4801	ENGS9301D5RF	TUNER	1	(D) (M) (P) (V)
	V14	K1KA06B00220	6P CONNECTOR	1	
	X8300	H0J245500110	CRYSTAL	1	
	X8600	H0J250500109	CRYSTAL	1	
	X9300	H0J200500091	CRYSTAL	1	
	ZA16001	K4AZ01D00004	TERMINAL	1	
	ZA16002	K4AZ01D00004	TERMINAL	1	
	ZA16402	K4AZ01D00004	TERMINAL	1	
	ZA16403	K4AZ01D00004	TERMINAL	1	
	ZA17202	K4CD01000013	AV TERMINAL	1	
	ZA17203	K4CD01000013	AV TERMINAL	1	
	ZA17301	K4CD01000013	AV TERMINAL	1	
	ZA17302	K4CD01000013	AV TERMINAL	1	
	ZA17303	K4CD01000013	AV TERMINAL	1	
	ZA17304	K4CD01000013	AV TERMINAL	1	

Model No. : TH-P50UT30D/G/M/P/V Exploded View 1

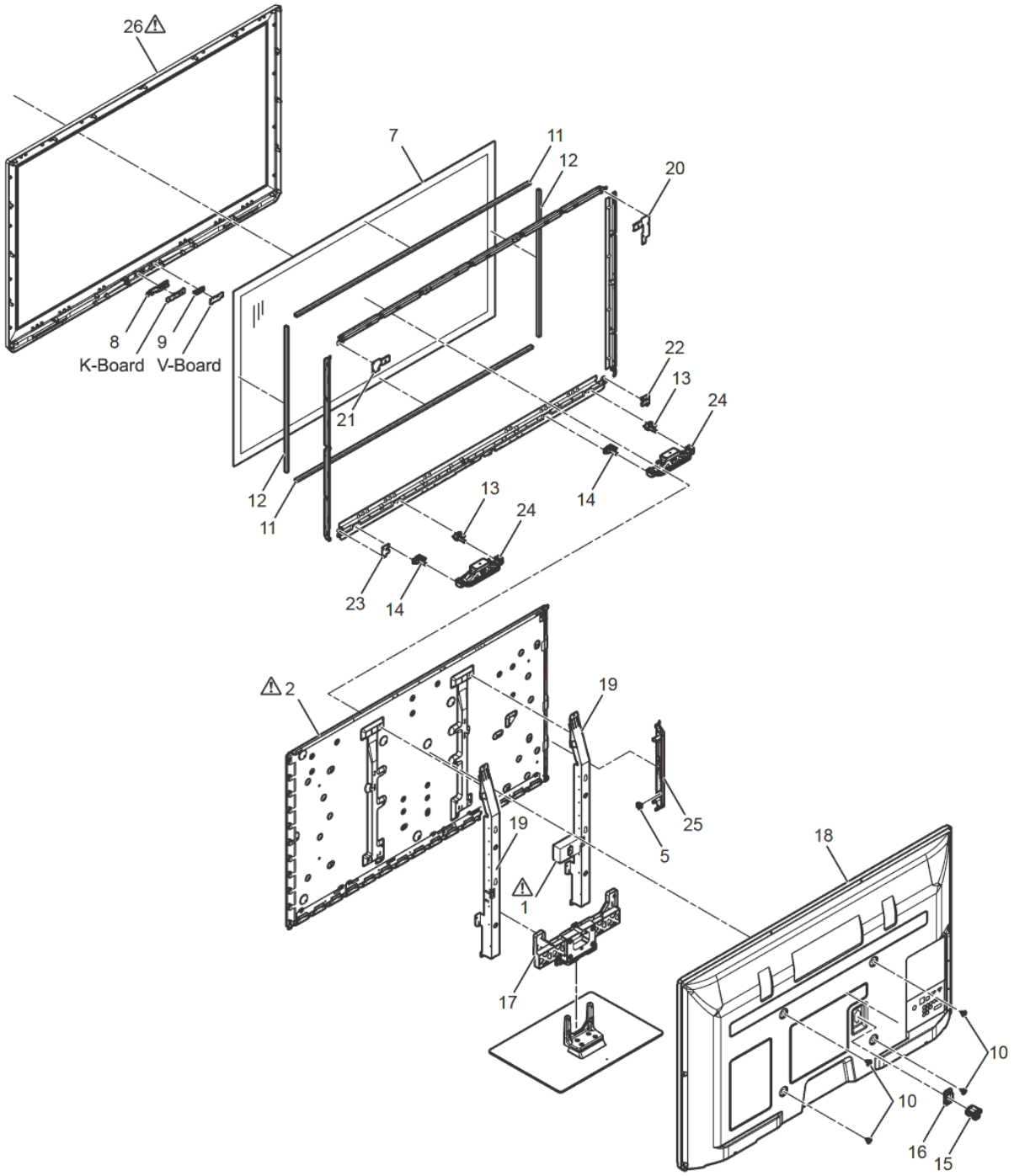

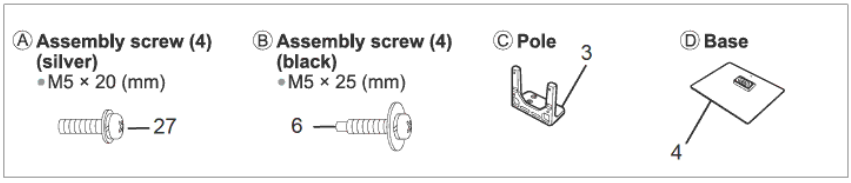

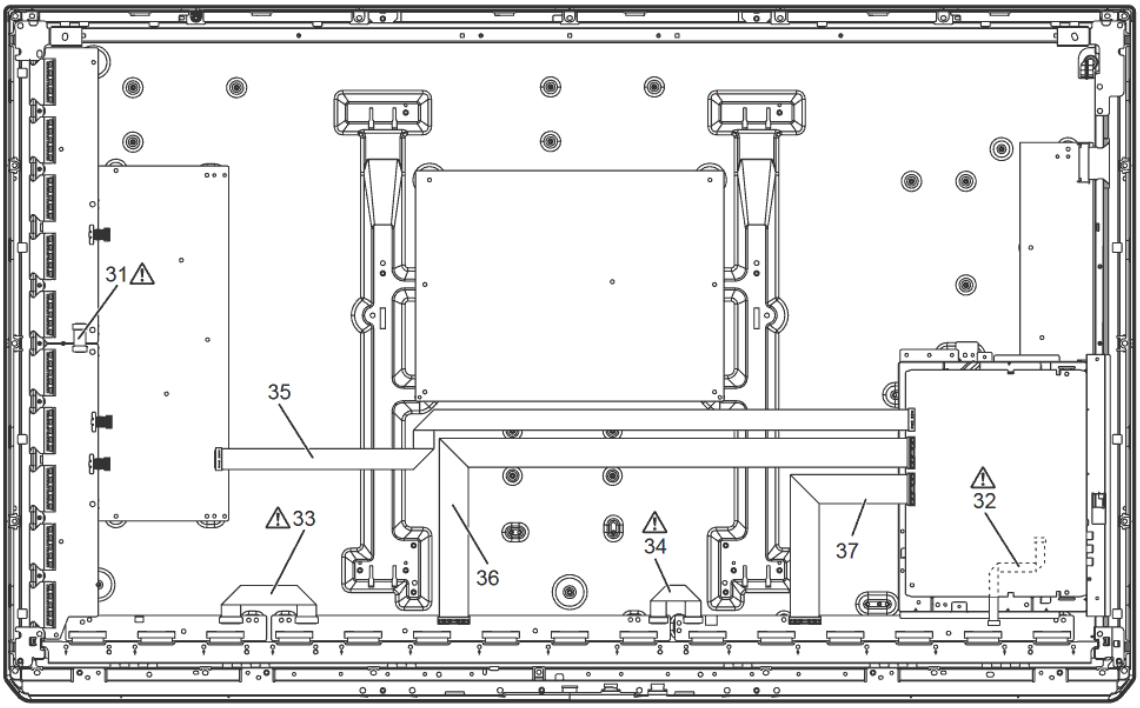
31
35
33
36
34
37
32

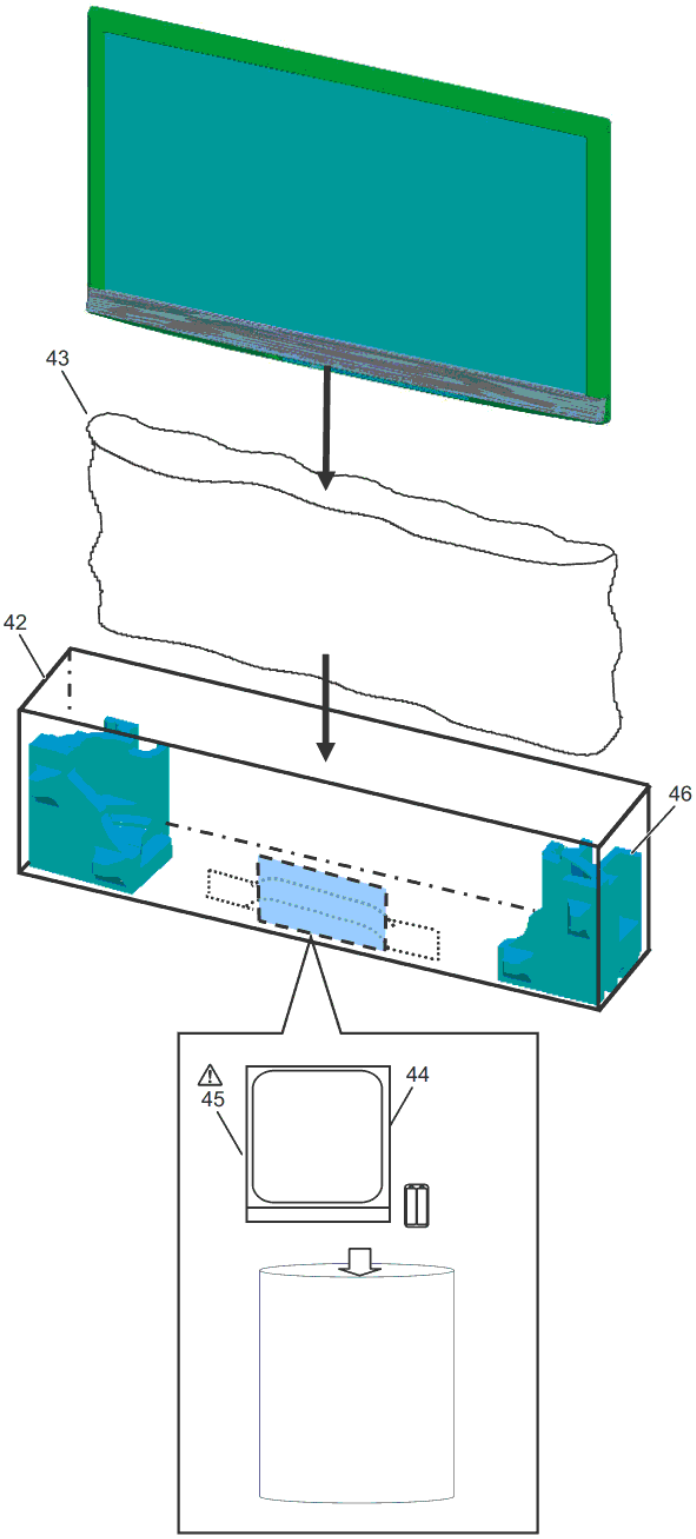
43
42
46
45
44

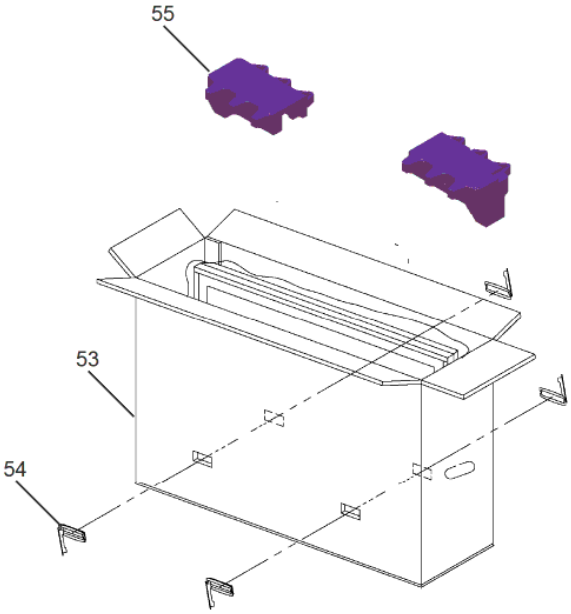
55
53
54

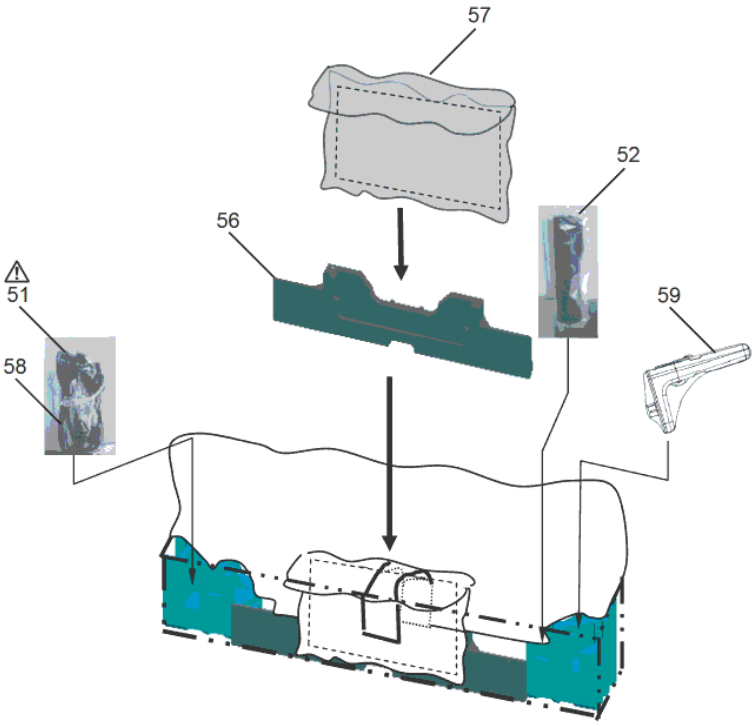
57
52
56
51
59
58

Model No. : TH-P50UT30D/G/M/P/V Parts List

Safety	Ref. No.	Part No.	Part Name & Description	Q'ty	Remarks
⚠	1	K2AHYH000041	AC-INLET WITH CABLE	1	PAVCTH
⚠	51	K2CN3YY00006	AC CORD	1	(G) (V)
⚠	51	K2CT3YY00021	AC CORD	1	(M)
⚠	51	K2CT3YY00033	AC CORD	1	(P)
⚠	51	K2CZ3YY00010	AC CORD	1	(D)
⚠	2	MD50F14C1T	PLASMA DISPLAY PANEL	1	PAVCTH
	52	N2QAYB000583	REMOTE CONTROL	1	(G)
	52	N2QAYB000586	REMOTE CONTROL	1	(D) (M) (P) (V)
	3	TBL5ZA3035	STAND POLE	1	PAVCTH
	4	TBL5ZX0053	PEDESTAL STAND	1	PAVCTH
⚠		TBM4TC199	NAME PLATE	1	(G) PAVCTH
⚠		TBM4TC200	NAME PLATE	1	(M) PAVCTH
⚠		TBM4TC206	NAME PLATE	1	(D) PAVCTH
⚠		TBM4TC208	NAME PLATE	1	(P) PAVCTH
⚠		TBM4TC210	NAME PLATE	1	(V) PAVCTH
	5	TBX4TA00201	POWER BUTTON	1	
		THEJ036J	SCREW(TUNER SHEILD:3 ATTACHMENT METAL:6)	9	
		THEJ0409	SCREW	9	chap.3.1. (5) (6)
		THEL0239	SCREW(DD:15)	15	
		THEL052Z	SCREW	14	chap.3.1. (3)
	6	THEL087N	SCREW M5x25	4	
	7	TKGA5681	FRONT GLASS	1	PAVCTH
	8	TKK4TC5010	LED PANEL	1	
	9	TKK4TC5015	3D EMITTER PANEL	1	PAVCTH
	10	TKKL5493	M8 CAP	4	
	11	TMK4TG005	SPONGE(FRONT GLASS/UPPER/BOTTOM)	2	PAVCTH
	12	TMK4TG006	SPONGE(FRONT GLASS/LEFT/RIGHT)	2	PAVCTH
		TMME332	CLAMPER(HANGER:4 STAND BRACKET:2)	6	
		TMME380	CLAMPER	1	
		TMME381	EDGE SADDLE	1	PAVCTH
		TMME397	SPACER	7	
	13	TMW4TX001	SP BRACKET L	2	
	14	TMW4TX002	SP BRACKET R	2	
	15	TMXX064	AC CORD CLAMPER A	1	
	16	TMXX065	AC CORD CLAMPER B	1	
	17	TMZ4TX5006	STAND BRACKET	1	PAVCTH
	42	TPC4TA02901	CARTON BOX BOTTOM	1	PAVCTH
	53	TPC4TA08002	CARTON BOX TOP(WITH STAMP)	1	(D) PAVCTH
	53	TPC4TA08003	CARTON BOX TOP(WITH STAMP)	1	(G) PAVCTH
	53	TPC4TA08004	CARTON BOX TOP(WITH STAMP)	1	(M) PAVCTH
	53	TPC4TA08005	CARTON BOX TOP(WITH STAMP)	1	(P) PAVCTH
	53	TPC4TA08009	CARTON BOX TOP(WITH STAMP)	1	(V) PAVCTH
	54	TPD169487	JOINT	4	
	55	TPD4TA0056	TOP CUSHION	1	PAVCTH
	46	TPD4TA0057	BOTTOM CUSHION	1	PAVCTH
	56	TPD4TA0040	PEDESTAL CUSHION	1	PAVCTH
	57	TPE4TB007	BAG (PEDESTAL STAND)	1	
	43	TPE4TH002	SET BAG	1	PAVCTH
	44	TPE4TP001	BAG (INSTRUCTION BOOK)	1	PAVCTH
	58	TPE4TP002	BAG FOR AC CORD	1	PAVCTH
⚠	45	TQB4TC0120	INSTRUCTION BOOK(ENGLISH)	1	(D) (M) (P) (V) PAVCTH
⚠	45	TQB4TC0122	INSTRUCTION BOOK(ARABIC)	1	(M) (P) PAVCTH
⚠	45	TQB4TC0126	INSTRUCTION BOOK(ENGLISH)	1	(G) PAVCTH
⚠	45	TQB4TC0127	INSTRUCTION BOOK(INDONESIA)	1	(G) PAVCTH
⚠	45	TQB4TC0129	INSTRUCTION BOOK(VIETNAMESE)	1	(V) PAVCTH
	59	TQE4TF001	BAG (STAND POLE)	1	PAVCTH
		TQZ4TH004	SCREW USE HANDBILE	1	
⚠	31	TSXM217	CABLE(SU11-SD11)	1	
⚠	32	TSXM233-1	CABLE(C33-SS23)	1	
⚠	33	TSXM238-1	CABLE(C10-C20)	1	
⚠	34	TSXM240-1	CABLE(C26-C36)	1	
	35	TSXM457	CABLE(A20-SC20)	1	PAVCTH

Model No. : TH-P50UT30D/G/M/P/V Parts List

Safety	Ref. No.	Part No.	Part Name & Description	Q'ty	Remarks
	36	TSXM458	CABLE(A31-C21)	1	PAVCTH
	37	TSXM459	CABLE(A32-C31)	1	PAVCTH
	18	TTU4TA0195	REAR COVER	1	(G) PAVCTH
	18	TTU4TA0196	REAR COVER	1	(M) PAVCTH
	18	TTU4TA0202	REAR COVER	1	(D) PAVCTH
	18	TTU4TA0205	REAR COVER	1	(P) PAVCTH
	18	TTU4TA0206	REAR COVER	1	(V) PAVCTH
	19	TUX4TA012	HANGER METAL	2	PAVCTH
	20	TUX4TJ075	ATTACHMENT METAL TL	1	
	21	TUX4TJ076	ATTACHMENT METAL TR	1	
	22	TUX4TJ077	ATTACHMENT METAL BL	1	
	23	TUX4TJ078	ATTACHMENT METAL BR	1	
	24	TXFEA01NNUA	SPEAKER L/R ASSY	2	PAVCTH
	25	TXFKP01NWUA	SIDE TERMINAL COVER ASSY	1	PAVCTH
⚠	26	TXFKY5Z0176	CABINET ASSY	1	PAVCTH
		TXJA11NMUA	SPEAKER LEAD (A11-SPL/SPR)	1	PAVCTH
		XSB3+6FJ	SCREW(HDMI-SIDE:1)	1	
		XTB4+12GFJ	SCREW(GH:18 3D_LED:1)	19	
		XTB4+12GFJK	SCREW(BC:8)	8	chap.3.1. (4)
		XTV3+10JFJK	SCREW(REAR AV:2)	2	chap.3.1. (2)
		XYN3+F10FJK	SCREW(BC-AC_INLET:2)	2	chap.3.1. (1)
		XYN3+F8FJ	SCREW(A-PRINT:4)	4	
		XYN4+E8FJ	SCREW	1	
		XYN4+F8FJ	SCREW(SC-SUSD:4)	4	
	27	XYN5+F20FN	SCREW M5x20 SILVER	4	