ORDER NO.PSG1004049CE

Service Manual

Plasma Television

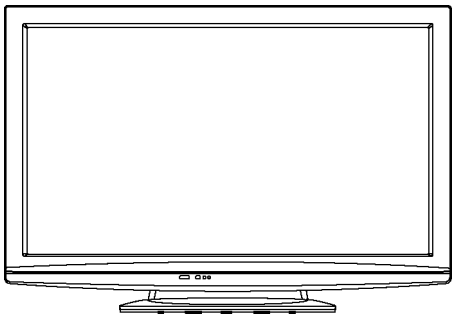

Model No. TH-P46U20K
TH-P46U20M
TH-P46U20P
TH-P46U20V

GPF13DA Chassis

⚠ WARNING

This service information is designed for experienced repair technicians only and is not designed for use by the general public.
It does not contain warnings or cautions to advise non-technical individuals of potential dangers in attempting to service a product.
Products powered by electricity should be serviced or repaired only by experienced professional technicians. Any attempt to service or repair the product or products dealt with in this service information by anyone else could result in serious injury or death.

IMPORTANT SAFETY NOTICE

There are special components used in this equipment which are important for safety. These parts are marked by ⚠ in the Schematic Diagrams, Circuit Board Diagrams, Exploded Views and Replacement Parts List. It is essential that these critical parts should be replaced with manufacturer's specified parts to prevent shock, fire or other hazards. Do not modify the original design without permission of manufacturer.

Panasonic®

© Panasonic Corporation 2010.
Unauthorized copying and distribution is a violation of law.

TABLE OF CONTENTS

PAGE

1 Safety Precautions ---------- **3**
1.1. General Guidelines ---------- 3
1.2. Touch-Current Check ---------- 3
2 Warning ---------- **4**
2.1. Prevention of Electrostatic Discharge (ESD) to Electrostatically Sensitive (ES) Devices ---------- 4
2.2. About lead free solder (PbF) ---------- 5
3 Service Navigation ---------- **6**
3.1. PCB Layout ---------- 6
3.2. Applicable signals ---------- 7
4 Specifications ---------- **8**
5 Service Mode ---------- **10**
5.1. How to enter into Service Mode ---------- 10
5.2. Option - Mirror ---------- 12
5.3. Service tool mode ---------- 12
5.4. Hotel mode ---------- 13
5.5. Data Copy by SD Card ---------- 14
6 Troubleshooting Guide ---------- **17**
6.1. Check of the IIC bus lines ---------- 17
6.2. Power LED Blinking timing chart ---------- 18
6.3. No Power ---------- 19
6.4. No Picture ---------- 20
6.5. Local screen failure ---------- 21
7 Service Fixture & Tools ---------- **22**
7.1. SC jig ---------- 22
8 Disassembly and Assembly Instructions ---------- **23**
8.1. Remove the Rear cover ---------- 23
8.2. Remove the AC inlet ---------- 23
8.3. Remove the P-Board ---------- 23
8.4. Remove the Side terminal cover and the Side shield metal ---------- 23
8.5. Remove the Tuner unit ---------- 24
8.6. Remove the A-Board ---------- 24
8.7. Remove the Speakers ---------- 24
8.8. Remove the SU-Board ---------- 24
8.9. Remove the SD-Board ---------- 25
8.10. Remove the SC-Board ---------- 25
8.11. Remove the SS2-Board ---------- 25
8.12. Remove the SS-Board ---------- 25
8.13. Remove the Hanger metals and the Stand brackets ---------- 26
8.14. Remove the C1-Board ---------- 26
8.15. Remove the C2-Board ---------- 26
8.16. Remove the S-Board ---------- 27
8.17. Remove the Plasma panel section from the Cabinet assy (glass) ---------- 27
8.18. Remove the Glass holders ---------- 28
8.19. Remove the K-Board ---------- 28
8.20. Replace the plasma panel ---------- 28
9 Measurements and Adjustments ---------- **29**
9.1. Adjustment ---------- 29
10 Block Diagram ---------- **33**
10.1. Main Block Diagram ---------- 33
10.2. Block (1/4) Diagram ---------- 34
10.3. Block (2/4) Diagram ---------- 35
10.4. Block (3/4) Diagram ---------- 36
10.5. Block (4/4) Diagram ---------- 37
11 Wiring Connection Diagram ---------- **39**

PAGE

11.1. Caution statement. ---------- 39
11.2. Wiring (1) ---------- 39
11.3. Wiring (2) ---------- 40
11.4. Wiring (3) ---------- 40
11.5. Wiring (4) ---------- 41
12 Schematic Diagram ---------- **43**
12.1. Schematic Diagram Note ---------- 43
12.2. P-Board (1/3) Schematic Diagram ---------- 44
12.3. P-Board (2/3) Schematic Diagram ---------- 45
12.4. P-Board (3/3) Schematic Diagram ---------- 46
12.5. A-Board (1/19) Schematic Diagram ---------- 47
12.6. A-Board (2/19) Schematic Diagram ---------- 48
12.7. A-Board (3/19) Schematic Diagram ---------- 49
12.8. A-Board (4/19) Schematic Diagram ---------- 50
12.9. A-Board (5/19) Schematic Diagram ---------- 51
12.10. A-Board (6/19) Schematic Diagram ---------- 52
12.11. A-Board (7/19) Schematic Diagram ---------- 53
12.12. A-Board (8/19) Schematic Diagram ---------- 54
12.13. A-Board (9/19) Schematic Diagram ---------- 55
12.14. A-Board (10/19) Schematic Diagram ---------- 56
12.15. A-Board (11/19) Schematic Diagram ---------- 57
12.16. A-Board (12/19) Schematic Diagram ---------- 58
12.17. A-Board (13/19) Schematic Diagram ---------- 59
12.18. A-Board (14/19) Schematic Diagram ---------- 60
12.19. A-Board (15/19) Schematic Diagram ---------- 61
12.20. A-Board (16/19) Schematic Diagram ---------- 62
12.21. A-Board (17/19) Schematic Diagram ---------- 63
12.22. A-Board (18/19) Schematic Diagram ---------- 64
12.23. A-Board (19/19) Schematic Diagram ---------- 65
12.24. K-Board and S-Board Schematic Diagram ---------- 66
12.25. C1-Board (1/2) Schematic Diagram ---------- 67
12.26. C1-Board (2/2) Schematic Diagram ---------- 68
12.27. C2-Board (1/2) Schematic Diagram ---------- 69
12.28. C2-Board (2/2) Schematic Diagram ---------- 70
12.29. SC-Board (1/4) Schematic Diagram ---------- 71
12.30. SC-Board (2/4) Schematic Diagram ---------- 72
12.31. SC-Board (3/4) Schematic Diagram ---------- 73
12.32. SC-Board (4/4) Schematic Diagram ---------- 74
12.33. SS-Board (1/2) Schematic Diagram ---------- 75
12.34. SS-Board (2/2) and SS2-Board Schematic Diagram ---------- 76
13 Printed Circuit Board ---------- **77**
13.1. P-Board ---------- 77
13.2. K, S and SS2-Board ---------- 80
13.3. A-Board ---------- 81
13.4. C1-Board ---------- 83
13.5. C2-Board ---------- 84
13.6. SC-Board ---------- 85
13.7. SS-Board ---------- 87
14 Exploded View and Replacement Parts List ---------- **89**
14.1. Exploded View and Mechanical Replacement Parts List ---------- 89
14.2. Electrical Replacement Parts List ---------- 96

1 Safety Precautions

1.1. General Guidelines

1. When conducting repairs and servicing, do not attempt to modify the equipment, its parts or its materials.
2. When wiring units (with cables, flexible cables or lead wires) are supplied as repair parts and only one wire or some of the wires have been broken or disconnected, do not attempt to repair or re-wire the units. Replace the entire wiring unit instead.
3. When conducting repairs and servicing, do not twist the Faston connectors but plug them straight in or unplug them straight out.
4. When servicing, observe the original lead dress. If a short circuit is found, replace all parts which have been overheated or damaged by the short circuit.
5. After servicing, see to it that all the protective devices such as insulation barriers, insulation papers shields are properly installed.
6. After servicing, make the following leakage current checks to prevent the customer from being exposed to shock hazards.

1.2. Touch-Current Check

1. Plug the AC cord directly into the AC outlet. Do not use an isolation transformer for this check.
2. Connect a measuring network for touch currents between each exposed metallic part on the set and a good earth ground such as a water pipe, as shown in Figure 1.
3. Use Leakage Current Tester (Simpson 228 or equivalent) to measure the potential across the measuring network.
4. Check each exposed metallic part, and measure the voltage at each point.
5. Reserve the AC plug in the AC outlet and repeat each of the above measure.
6. The potential at any point (TOUGH CURRENT) expressed as voltage U_1 and U_2, does not exceed the following values:

   For a. c.: U_1 = 35 V (peak) and U_2 = 0.35 V (peak);

   For d. c.: U_1 = 1.0 V,

   Note:

   The limit value of U_2 = 0.35 V (peak) for a. c. and U_1 = 1.0 V for d. c. correspond to the values 0.7 mA (peak) a. c. and 2.0 mA d. c.

   The limit value U_1 = 35 V (peak) for a. c. correspond to the value 70 mA (peak) a. c. for frequencies greater than 100 kHz.
7. In case a measurement is out of the limits specified, there is a possibility of a shock hazard, and the equipment should be repaired and rechecked before it is returned to the customer.

Measuring network for TOUCH CURRENTS

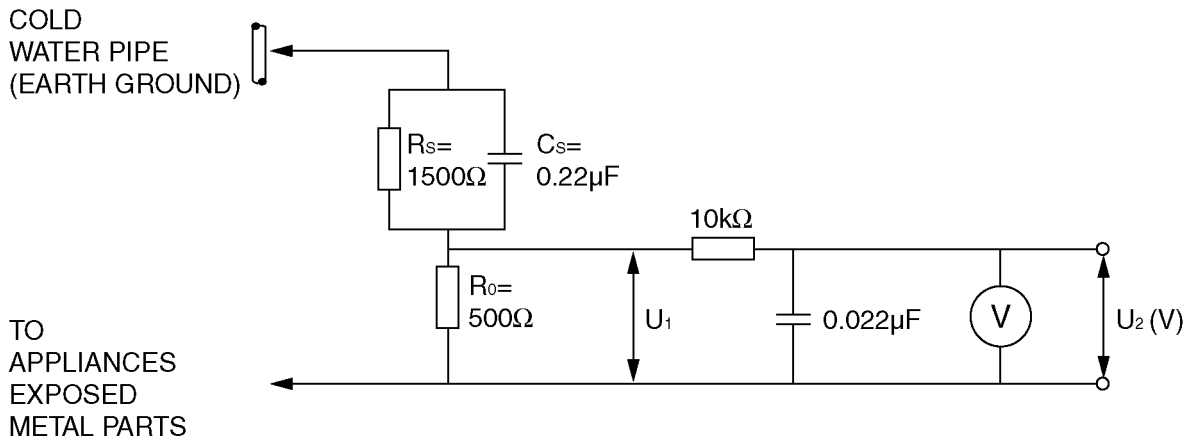

Resistance values in ohms (Ω)

V: Voltmeter or oscilloscope
(r.m.s. or peak reading)

Input resistance: ≥ 1 MΩ
Input capacitance: ≤ 200 pF
Frequency range: 15 Hz to 1 MHz and d.c. respectively

NOTE - Appropriate measures should be taken to obtain the correct value in case of non-sinusoidal waveforms.

Figure 1

2 Warning

2.1. Prevention of Electrostatic Discharge (ESD) to Electrostatically Sensitive (ES) Devices

Some semiconductor (solid state) devices can be damaged easily by static electricity. Such components commonly are called Electrostatically Sensitive (ES) Devices. Examples of typical ES devices are integrated circuits and some field-effect transistors and semiconductor [chip] components. The following techniques should be used to help reduce the incidence of component damage caused by electrostatic discharge (ESD).

1. Immediately before handling any semiconductor component or semiconductor-equipped assembly, drain off any ESD on your body by touching a known earth ground. Alternatively, obtain and wear a commercially available discharging ESD wrist strap, which should be removed for potential shock reasons prior to applying power to the unit under test.
2. After removing an electrical assembly equipped with ES devices, place the assembly on a conductive surface such as aluminum foil, to prevent electrostatic charge buildup or exposure of the assembly.
3. Use only a grounded-tip soldering iron to solder or unsolder ES devices.
4. Use only an anti-static solder removal device. Some solder removal devices not classified as [anti-static (ESD protected)] can generate electrical charge sufficient to damage ES devices.
5. Do not use freon-propelled chemicals. These can generate electrical charges sufficient to damage ES devices.
6. Do not remove a replacement ES device from its protective package until immediately before you are ready to install it. (Most replacement ES devices are packaged with leads electrically shorted together by conductive foam, aluminum foil or comparable conductive material).
7. Immediately before removing the protective material from the leads of a replacement ES device, touch the protective material to the chassis or circuit assembly into which the device will be installed.

   Caution

   Be sure no power is applied to the chassis or circuit, and observe all other safety precautions.
8. Minimize bodily motions when handling unpackaged replacement ES devices. (Otherwise ham less motion such as the brushing together of your clothes fabric or the lifting of your foot from a carpeted floor can generate static electricity (ESD) sufficient to damage an ES device).

2.2. About lead free solder (PbF)

Note: Lead is listed as (Pb) in the periodic table of elements.
In the information below, Pb will refer to Lead solder, and PbF will refer to Lead Free Solder.
The Lead Free Solder used in our manufacturing process and discussed below is (Sn+Ag+Cu).
That is Tin (Sn), Silver (Ag) and Copper (Cu) although other types are available.

This model uses Pb Free solder in it's manufacture due to environmental conservation issues. For service and repair work, we'd suggest the use of Pb free solder as well, although Pb solder may be used.

PCBs manufactured using lead free solder will have the PbF within a leaf Symbol **PbF** stamped on the back of PCB.

Caution

- Pb free solder has a higher melting point than standard solder. Typically the melting point is 50 ~ 70 °F (30~40 °C) higher. Please use a high temperature soldering iron and set it to 700 ± 20 °F (370 ± 10 °C).
- Pb free solder will tend to splash when heated too high (about 1100 °F or 600 °C).
  If you must use Pb solder, please completely remove all of the Pb free solder on the pins or solder area before applying Pb solder. If this is not practical, be sure to heat the Pb free solder until it melts, before applying Pb solder.
- After applying PbF solder to double layered boards, please check the component side for excess solder which may flow onto the opposite side. (see figure below)

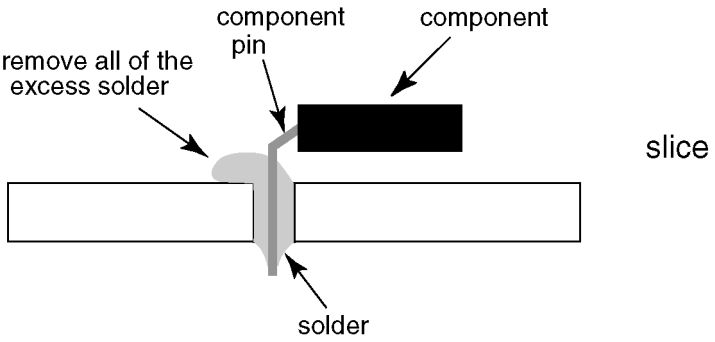

Suggested Pb free solder

There are several kinds of Pb free solder available for purchase. This product uses Sn+Ag+Cu (tin, silver, copper) solder. However, Sn+Cu (tin, copper), Sn+Zn+Bi (tin, zinc, bismuth) solder can also be used.

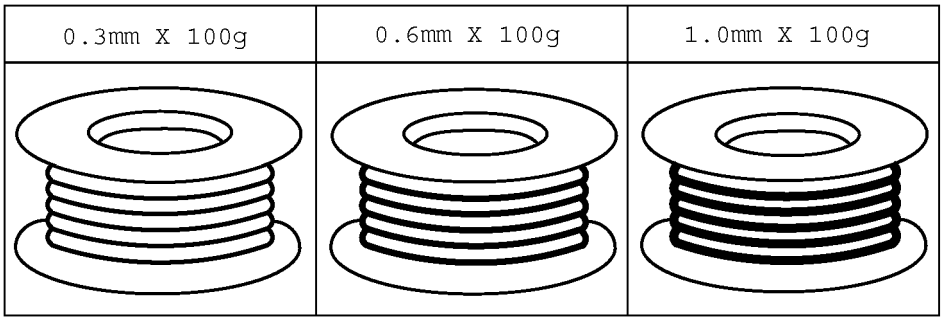

3 Service Navigation

3.1. PCB Layout

Remove the Rear cover

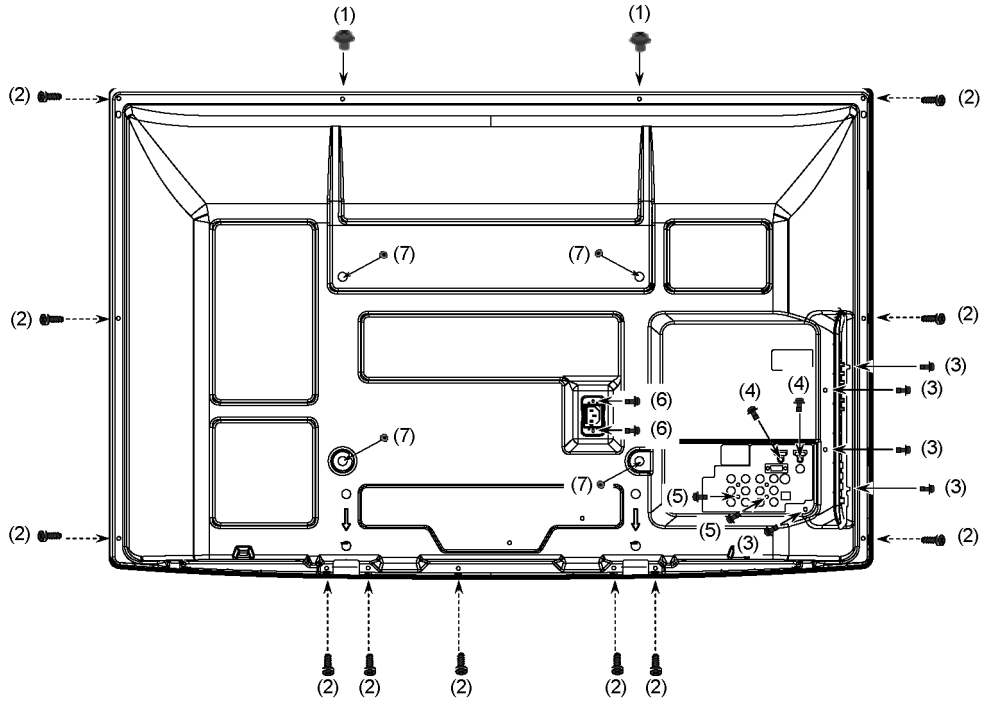

Remove:
2screws (1) THEL052Z
11screws (2) XTB4+12GFJK
5screws (3) THEJ0339
2screws (4) XSB3+6FJ
2screws (5) XTV3+10JFJK
2screws (6) XYN3+F10FJK
4screws (7) TKKL5493

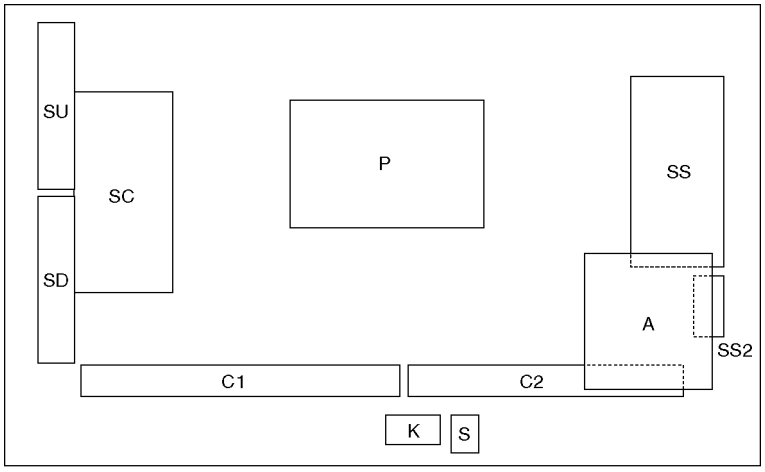

Board Name	Function	Board Name	Function
P	Power Supply	SC	Scan Drive
A	DC-DC Converter, Tuner Speaker out, AV Terminal, HDMI in, SD Card Digital Signal Processor, PEAKS Format Converter, Plasma AI, Sub-Field Processor Key Switch	SS	Sustain Drive
		SS2	Sustain out (Lower)
		SU	Scan out (Upper) Non serviceable. SU-Board should be exchanged for service.
K	Remote receiver, Power LED, C.A.T.S sensor	SD	Scan out (Lower) Non serviceable. SD-Board should be exchanged for service.
S	Power Switch		
C1	Data Driver (Lower Right)		
C2	Data Driver (Lower Left)		

3.2. Applicable signals

COMPONENT (Y, P_B/C_B, P_R/C_R), HDMI

* Mark: Applicable input signal

Signal name	COMPONENT	HDMI
525 (480) / 60i	*	*
525 (480) / 60p	*	*
625 (576) / 50i	*	*
625 (576) / 50p	*	*
750 (720) / 60p	*	*
750 (720) / 50p	*	*
1,125 (1,080) / 60i	*	*
1,125 (1,080) / 50i	*	*
1,125 (1,080) / 60p		*
1,125 (1,080) / 50p		*
1,125 (1,080) / 24p		*

PC (from D-sub 15P)

Applicable input signal for PC is basically compatible to VESA standard timing.

Signal name	Horizontal frequency (kHz)	Vertical frequency (Hz)
640 × 400 @70 Hz	31.47	70.07
640 × 480 @60 Hz	31.47	59.94
640 × 480 @75 Hz	37.50	75.00
800 × 600 @60 Hz	37.88	60.32
800 × 600 @75 Hz	46.88	75.00
800 × 600 @85 Hz	53.67	85.06
852 × 480 @60 Hz	31.44	59.89
1,024 × 768 @60 Hz	48.36	60.00
1,024 × 768 @70 Hz	56.48	70.07
1,024 × 768 @75 Hz	60.02	75.03
1,024 × 768 @85 Hz	68.68	85.00
1,280 × 1,024 @60 Hz	63.98	60.02
1,280 × 768 @60 Hz	47.70	60.00
1,366 × 768 @60 Hz	48.39	60.04
Macintosh13” (640 × 480)	35.00	66.67
Macintosh16” (832 × 624)	49.73	74.55
Macintosh21” (1,152 × 870)	68.68	75.06

PC (from HDMI terminal)

Applicable input signal for PC is basically compatible to HDMI standard timing.

Signal name	Horizontal frequency (kHz)	Vertical frequency (Hz)
640 × 480 @60 Hz	31.47	60.00
750 (720) / 60p	45.00	60.00
1,125 (1,080) / 60p	67.50	60.00

Note

- Signals other than above may not be displayed properly.
- The above signals are reformatted for optimal viewing on your display.
- PC signal is magnified or compressed for display, so that it may not be possible to show fine detail with sufficient clarity.

4 Specifications

Power Source	AC 220 - 240 V, 50 / 60 Hz (K/M/V) AC 110 - 240 V, 50 / 60 Hz (P)
Power Consumption	
Average use	300 W
Standby condition	0.4 W
Display panel	
Aspect Ratio	16:9
Visible screen size	117 cm (diagonal) 1,019 mm (W) × 573 mm (H)
Number of pixels	2,073,600 (1,920 (W) × 1,080 (H)) [5,760 × 1,080 dots]
Sound	
Speaker	160 mm × 40 mm × 2 pcs, 6 Ω
Audio Output	20 W (10 W + 10 W)
Headphones	M3 (3.5 mm) stereo mini Jack × 1
PC signals	VGA, SVGA, WVGA, XGA SXGA, WXGA ..... (compressed) Horizontal scanning frequency 31 - 69 kHz Vertical scanning frequency 59 - 86 Hz

Receiving Systems / Band name

17 Systems		Function
1	PAL B, G, H	Reception of broadcast transmissions and Playback from Video Cassette Tape Recorders
2	PAL I	
3	PAL D, K	
4	SECAM B, G	
5	SECAM D, K	
6	SECAM K1	
7	NTSC M (NTSC 3.58/4.5 MHz)	

17 Systems		Function
8	NTSC 4.43/5.5 MHz	Playback from Special VCR's or DVD
9	NTSC 4.43/6.0 MHz	
10	NTSC 4.43/6.5 MHz	
11	NTSC 3.58/5.5 MHz	
12	NTSC 3.58/6.0 MHz	
13	NTSC 3.58/6.5 MHz	
14	SECAM I	
15	PAL 60 Hz/5.5 MHz	Playback from Special Disc Players and Special VCR's or DVD
16	PAL 60 Hz/6.0 MHz	
17	PAL 60 Hz/6.5 MHz	

Receiving Systems	**VHF BAND**	**UHF BAND**	**CATV**
(Analogue TV)	2-12 (PAL/SECAM B, K1)	21-69	S1-S20 (OSCAR)
	0-12 (PAL B AUST.)	(PAL G, H, I/SECAM G, K, K1)	1-125 (USA CATV)
	1-9 (PAL B N.Z.)	28-69 (PAL B AUST.)	C13-C49 (JAPAN)
	1-12 (PAL/SECAM D)	13-57 (PAL D, K)	S21-S41 (HYPER)
	1-12 (NTSC M Japan)	13-62 (NTSC M Japan)	Z1-Z37 (CHINA)
	2-13 (NTSC M USA)	14-69 (NTSC M USA)	5A, 9A (AUST.)

Aerial - Rear	VHF/UHF	
Operating Conditions		
	Temperature:	0 °C - 40 °C
	Humidity:	20 % - 80 % RH (non-condensing)
Connection Terminals		
AV1 Input		
AUDIO L - R	RCA PIN Type × 2	0.5 V [rms]
VIDEO	RCA PIN Type × 1	1.0 V [p-p] (75 Ω)
COMPONENT	Y	1.0 V [p-p] (including synchronization)
	P_B/C_B, P_R/C_R	± 0.35 V [p-p]
AV2 Input		
AUDIO L - R	RCA PIN Type × 2	0.5 V [rms]
VIDEO	RCA PIN Type × 1	1.0 V [p-p] (75 Ω)
AV3 Input		
AUDIO L - R	RCA PIN Type × 2	0.5 V [rms]
VIDEO	RCA PIN Type × 1	1.0 V [p-p] (75 Ω)
Monitor Output		
AUDIO L - R	RCA PIN Type × 2	0.5 V [rms] (high impedance)
VIDEO	RCA PIN Type × 1	1.0 V [p-p] (75 Ω)
Others		
HDMI1 - 3 Input	TYPE A Connectors • This TV supports [HDAVI Control 5] function.	
PC Input	HIGH-DENSITY D-SUB 15PIN	R,G,B/0.7 V [p-p] (75 Ω) HD, VD/TTL Level 2.0 - 5.0 V [p-p] (high impedance)
Card slot	SD Card slot × 1	
Dimensions (W × H × D)	**TH-P46U20M / TH-P46U20P** 1,132 mm × 771 mm × 357 mm (With Pedestal) 1,132 mm × 722 mm × 93 mm (TV only) **TH-P46U20K / TH-P46U20V** 1,132 mm × 767 mm × 401 mm (With Pedestal) 1,132 mm × 722 mm × 93 mm (TV only)	

Mass	**TH-P46U20M / TH-P46U20P** 28.0 kg Net (With Pedestal) 26.0 kg Net (TV only) **TH-P46U20K / TH-P46U20V** 29.0 kg Net (With Pedestal) 26.0 kg Net (TV only)

Note

- Design and Specifications are subject to change without notice. Mass and Dimensions shown are approximate.

5 Service Mode

5.1. How to enter into Service Mode

While pressing [VOLUME (-)] button of the main unit, press [RECALL] button of the remote control three times within 2 seconds.

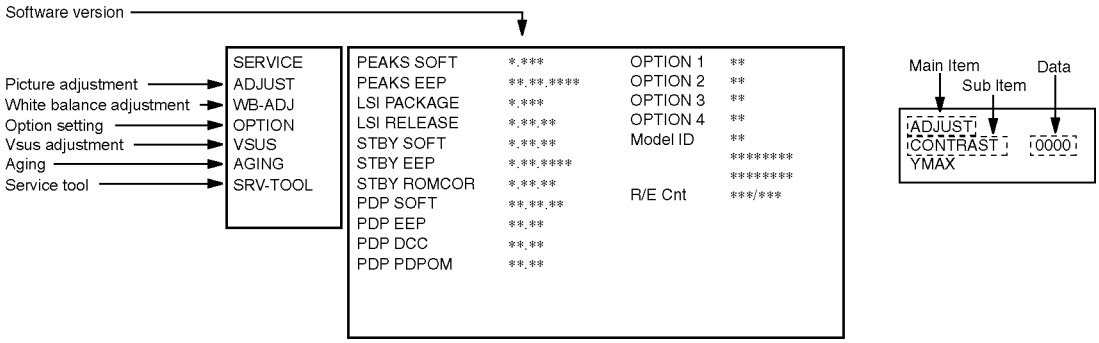

5.1.1. Key command

[1] button...Main items Selection in forward direction
[2] button...Main items Selection in reverse direction
[3] button...Sub items Selection in forward direction
[4] button...Sub items Selection in reverse direction
[RED] button...All Sub items Selection in forward direction
[GREEN] button...All Sub items Selection in reverse direction
[VOL] button...Value of sub items change in forward direction (+), in reverse direction (-)

5.1.2. Contents of adjustment mode

- Value is shown as a hexadecimal number.
- Preset value differs depending on models.
- After entering the adjustment mode, take note of the value in each item before starting adjustment.

Main item	Sub item	Sample data	Remark
ADJUST	CONTRAST	23A	
	COLOR	2B	
	TINT	00	
	SUB-BRT	80C	
	H-POS	0	
	H-AMP	0	
	V-POS	0	
	V-AMP	0	
WB-ADJ	R-CUT	80	
	G-CUT	80	
	B-CUT	80	
	R-DRV	F1	
	G-DRV	FC	
	B-DRV	D0	
	ALL-CUT	80	
	ALL-DRV	FC	
OPTION	Panel-Type	46FHD	Factory Preset
	Boot	ROM	
	STBY-SET	00	
	EMERGENCY	ON	
	Y/C Delay	0	
	OPT 1	00011100	
	OPT 2	11101111	
	OPT 3	00000001	
	OPT 4	00000000	
	EDID-CLK	HIGH	
	MIRROR	00 (See next)	
VSUS			
AGING	ALL WHITE		Built-in test patterns can be displayed.
	AI ALL BLUE + WHITE FRAME		
	AI ALL GREEN		
	AI ALL RED		
	LOW STEP WHITE		
	LOW STEP BLUE		
	LOW STEP GREEN		
	LOW STEP RED		
	RAMP WHITE		
	RAMP RED		
	RAMP GREEN		
	RAMP BLUE		
	A-ZONE B-ZONE		
	1% WINDOW		
	COLOR BAR		
	9 POINT BRIGHTNESS		
	WHITE FRAME		
	AI ALL BLUE		
	TWICE FIXATION 1% WINDOW		
	SCROLL		
	ON/OFF OR WHITE		
	R/G/B/W AGING MODE		
	0.5 TIME FIXATION ALL WHITE		
	ALL WHITE WITH COUNT		
SRV-TOOL			see next

Destination	K	M/V	P
Check sum	0xb1a5	0xb160	0xb1e1
EDID	d0 ecdccc--		

5.1.3. How to exit

Switch off the power with the [POWER] button on the main unit or the [POWER] button on the remote control.

5.2. Option - Mirror

Picture can be reversed left and right or up and down.
00 : Default (Normal picture is displayed)
01 : Picture is reversed left and right.
02 : Picture is reversed up and down.

00

01

02

Hint : If the defective symptom (e.g. Vertical bar or Horizontal bar) is moved by selection of this mirror, the possible cause is in A-board.

5.3. Service tool mode

5.3.1. How to access

1. Select [SRV-TOOL] in Service Mode.
2. Press [OK] button on the remote control.

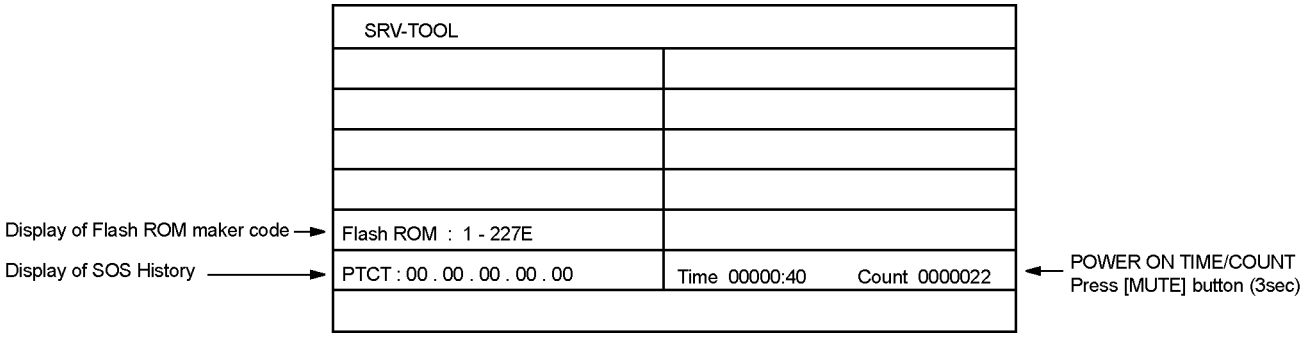

5.3.2. Display of SOS History

SOS History (Number of LED blinking) indication.
From left side; Last SOS, before Last, three occurrence before, 2nd occurrence after shipment, 1st occurrence after shipment.
This indication will be cleared by [Self-check indication and forced to factory shipment setting].

5.3.3. POWER ON Time, On/Off

Note : To display TIME/COUNT menu, highlight position, then press MUTE for 3sec.
Time : Cumulative power on time, indicated hour : minute by decimal
Count : Number of On/Off switching by decimal
Note : This indication will not be cleared by either of the self-checks or any other command.

5.3.4. Exit

1. Disconnect the AC cord from wall outlet or switch off the power with [Power] button on the main unit.

5.4. Hotel mode

1. Purpose
   Restrict a function for hotels.
2. Access command to the Hotel mode setup menu
   In order to display the Hotel mode setup menu, please enter the following command **(within 2 second)**.
   [TV] : Vol. [Down] + [REMOTE] : AV (3 times)

   Then, the Hotel mode setup menu is displayed.

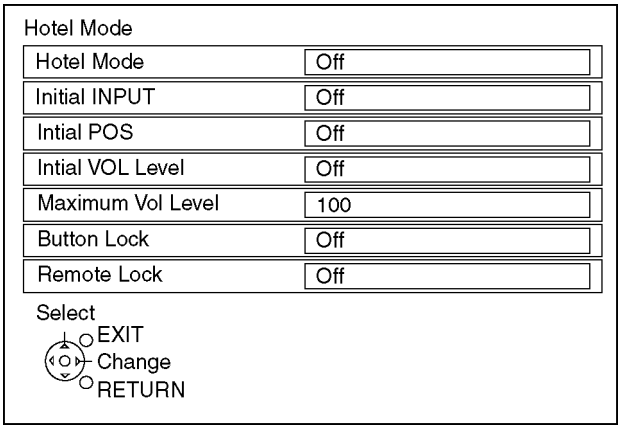

3. To exit the Hotel mode setup menu
   Disconnect AC power cord from wall outlet.
4. Explain the Hotel mode setup menu

item	Function
Hotel Mode	Select hotel mode ON/OFF
Initial INPUT	Select input signal modes. Set the input, when each time power is switched on. Selection : Off/TV/AV1/AV2/AV3/PC/HDMI1/HDMI2/HDMI3 • PC: selectable with VGA option
Initial POS	Select programme number. Selection : Off/0 to 99 • Off: give priority to a last memory
Initial VOL level	Adjust the volume when each time power is switched on. Selection/Range : Off/0 to 100 • Off: give priority to a last memory
Maximum VOL level	Adjust maximum volume. Range : 0 to 100
Button lock	Select local key conditions. Selection : Off/SETUP/MENU/ALL • Off: altogether valid • SETUP: only F-key is invalid (Tuning guide (menu) can not be selected.) • MENU: only F-key is invalid (only Volume/Mute can be selected.) • ALL: altogether invalid.
Remote lock	Select remote control key conditions. Selection : Off/SETUP/MENU • Off: altogether valid • SETUP: only Setup menu is invalid • MENU: Picture/Sound/Setup menu are invalid

5.5. Data Copy by SD Card

5.5.1. Purpose

(a) Board replacement (Copy the data when exchanging A-board):

When exchanging A-board, the data in original A-board can be copied to SD card and then copy to new A-board.

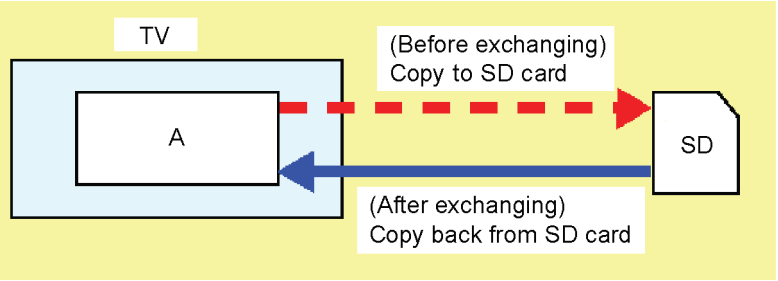

Following data can be copied.
User setting data
(incl. Hotel mode setting data)
Channel scan data
Adjustment and factory preset data

(b) Hotel (Copy the data when installing a number of units in hotel or any facility):

When installing a number of units in hotel or any facility, the data in master TV can be copied to SD card and then copy to other TVs.

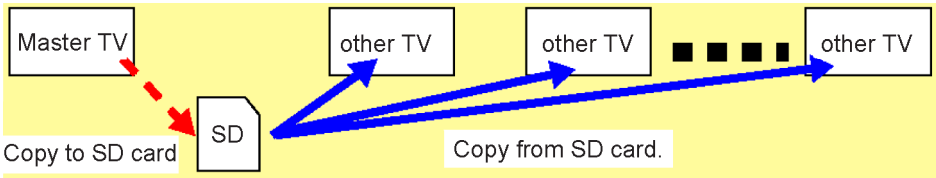

Following data can be copied.
User setting data
(incl. Hotel mode setting data)
Channel scan data

5.5.2. Preparation

Make pwd file as startup file for (a) or (b) in a empty SD card.

1. Insert a empty SD card to your PC.
2. Right-click a blank area in a SD card window, point to New, and then click text document. A new file is created by default (New Text Document.txt).
3. Right-click the new text document that you just created and select rename, and then change the name and extension of the file to the following file name for (a) or (b) and press ENTER.

File name:

(a) For Board replacement : boardreplace.pwd
(b) For Hotel : hotel.pwd

Note:

Please make only one file to prevent the operation error.

No any other file should not be in SD card.

5.5.3. Data copy from TV set to SD Card

1. Turn on the TV set.
2. Insert SD card with a startup file (pwd file) to SD slot.
   On-screen Display will be appeared according to the startup file automatically.
3. Input a following password for (a) or (b) by using remote control.
   (a) For Board replacement : 2770
   (b) For Hotel : 4850
   Data will be copied from TV set to SD card.
   It takes around 2 to 6 minutes maximum for copying.
4. After the completion of copying to SD card, remove SD card from TV set.
5. Turn off the TV set.

Note:

Following new folder will be created in SD card for data from TV set.
(a) For Board replacement : user_setup
(b) For Hotel : hotel

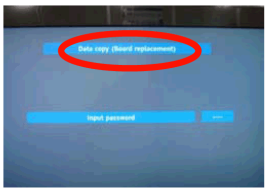

Data copy
(Board replacement)
or
(Hotel)

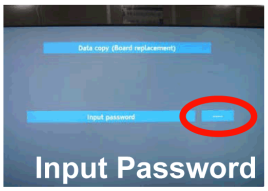

Input Password
2770
or
4850

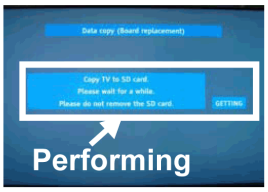

Performing

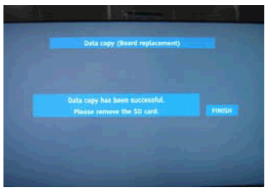

Completion
(e.g. exchanging repair board)

5.5.4. Data copy from to SD Card to TV set

1. Turn on the TV set.
2. Insert SD card with Data to SD slot.
   On-screen Display will be appeared according to the Data folder automatically.
3. Input a following password for (a) or (b) by using remote control.
   (a) For Board replacement : 2771
   (b) For Hotel : 4851
   Data will be copied from SD card to TV set.
4. After the completion of copying to SD card, remove SD card from TV set.
   (a) For Board replacement : Data will be deleted after copying (Limited one copy).
   (b) For Hotel : Data will not be deleted and can be used for other TVs.
5. Turn off the TV set.

Note:

1. Depending on the failure of boards, function of Data copy for board replacement does not work.
2. This function can be effective among the same model numbers.

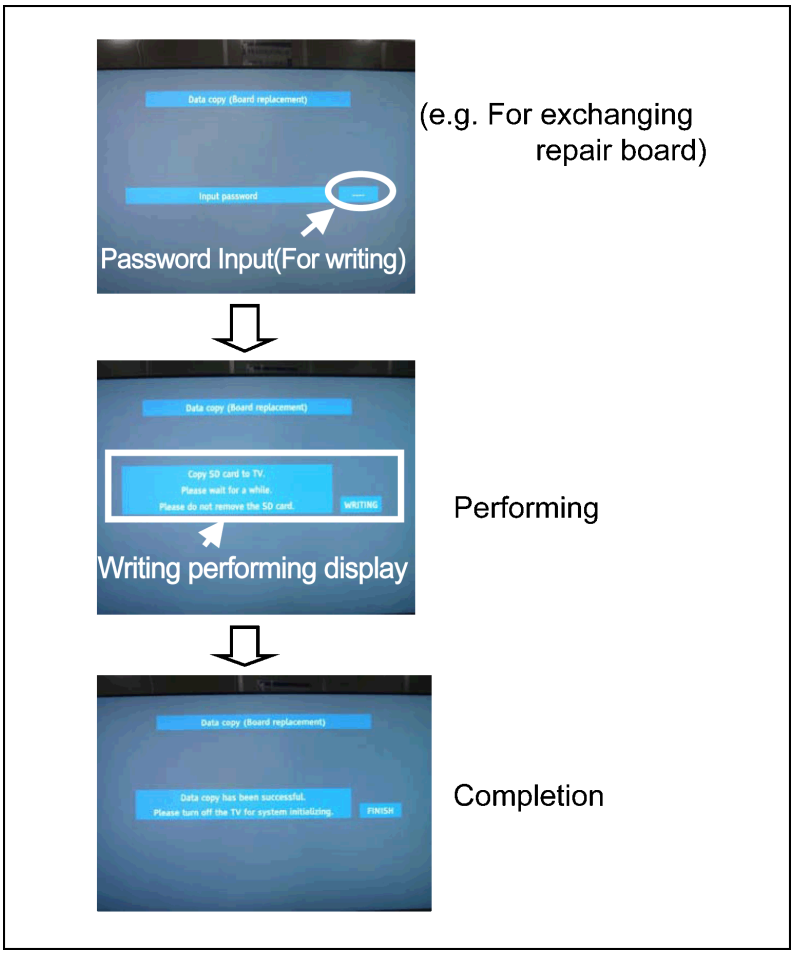

6 Troubleshooting Guide

Use the self-check function to test the unit.

1. Checking the IIC bus lines
2. Power LED Blinking timing

6.1. Check of the IIC bus lines

6.1.1. How to access

Self-check indication only:

Produce TV reception screen, and while pressing [VOLUME (-)] button on the main unit, press [OK] button on the remote control for more than 3 seconds.

Self-check indication and forced to factory shipment setting:

Produce TV reception screen, and while pressing [VOLUME (-)] button on the main unit, press [MENU] button on the remote control for more than 3 seconds.

6.1.2. Screen display

```
46FHD                    Panasonic  2010  PDP
SET
                         SELF CHECK COMPLETE
```

```
TUN        OK
STBY       OK
MEM1       OK
MEM2       OK
ADAM       OK
AVSW       OK
PDROM      OK
TEMP       OK
```

```
PEAKS-SOFT          *.***
PEAKS-EEP      **.**.****
LSI-PACKAGE         *.***
LSI-RELEASE           *.**
STBY-SOFT         *.**.**
STBY-EEP       *.**.****
STBY-ROMCORR      *.**.**
PDP-MCU        **.**.**
PDP-EEP           **.**
PDP-DCC           **.**
PDP-PDROM         **.**
```

```
SUM                  ****

Model ID               **
                   ********
                   ********

EDID            ** ********
```

6.1.3. Check Point

Confirm the following parts if NG was displayed.

Display	Ref. No.	Description	P.C.B.
TUN	TU2901B	TUNER	A-Board
STBY	IC8001	MPU	A-Board
MEM1	IC1100	EEPROM (MPU)	A-Board
MEM2	IC8950	EEPROM (PEAKS)	A-Board
ADAM	IC8001	A-chip (PEAKS)	A-Board
AVSW	IC3000	Audio/Video SW	A-Board
PDROM	IC9300	PD4H	A-Board
TEMP	IC1000	Temp Sensor	A-Board

6.1.4. Exit

Disconnect the AC cord from wall outlet or switch off the power with [Power] button on the main unit.

6.2. Power LED Blinking timing chart

1. Subject
   Information of LED Flashing timing chart.
2. Contents
   When an abnormality has occurred the unit, the protection circuit operates and reset to the stand by mode. At this time, the defective block can be identified by the number of blinks of the Power LED on the front panel of the unit.

Blinking Times	Blinking timing	Contents	Check point
1	Once, 3 sec, Light, No Light	Unknown SOS	-
		Panel information SOS PD4 Start SOS	-
2		15V SOS	A-Board P-Board
3		3.3V SOS	A-Board
4		Power SOS	P-Board
5		5V SOS	A-Board
6		Driver SOS1 (SC Energy recovery circuit) (A-SC FPC DET)	SC-Board A-SC FPC
7		Driver SOS2 (SU/SD Connector DET) (SU/SD Scan and Logic IC)	SU-Board SD-Board *
8		Driver SOS3 (SS FPC DET) (SS Energy recovery circuit)	SS-Board SS2-Board
9		Discharge Control SOS	A-Board
10		Sub 5V SOS Sub 3.3V SOS Sub 9V SOS Tuner Power SOS	A-Board SC-Board SS-Board P-Board
12		Sound SOS	A-Board Speaker

*Use SC jig to isolate the board.

6.3. No Power

First check point

There are following 3 states of No Power indication by power LED.

1. No lit
2. Green is lit then turns red blinking a few seconds later. (See 6.2.)
3. Only red is lit.

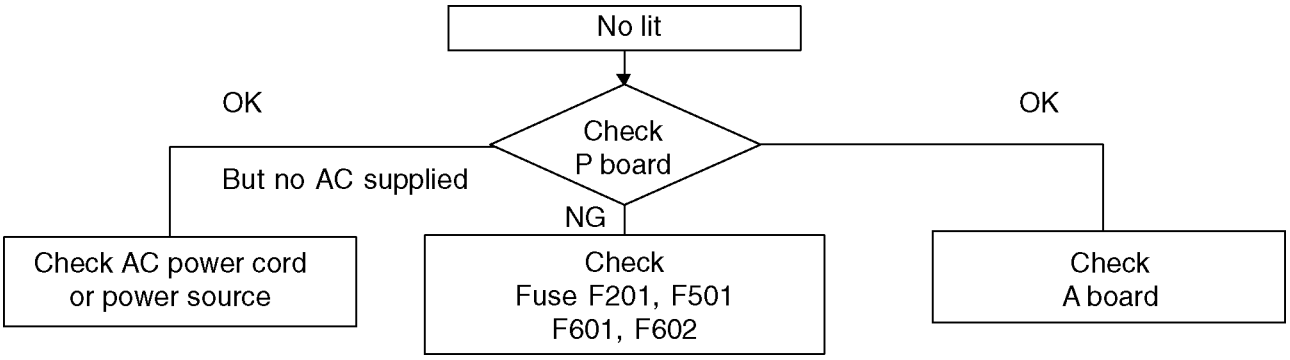

6.4. No Picture

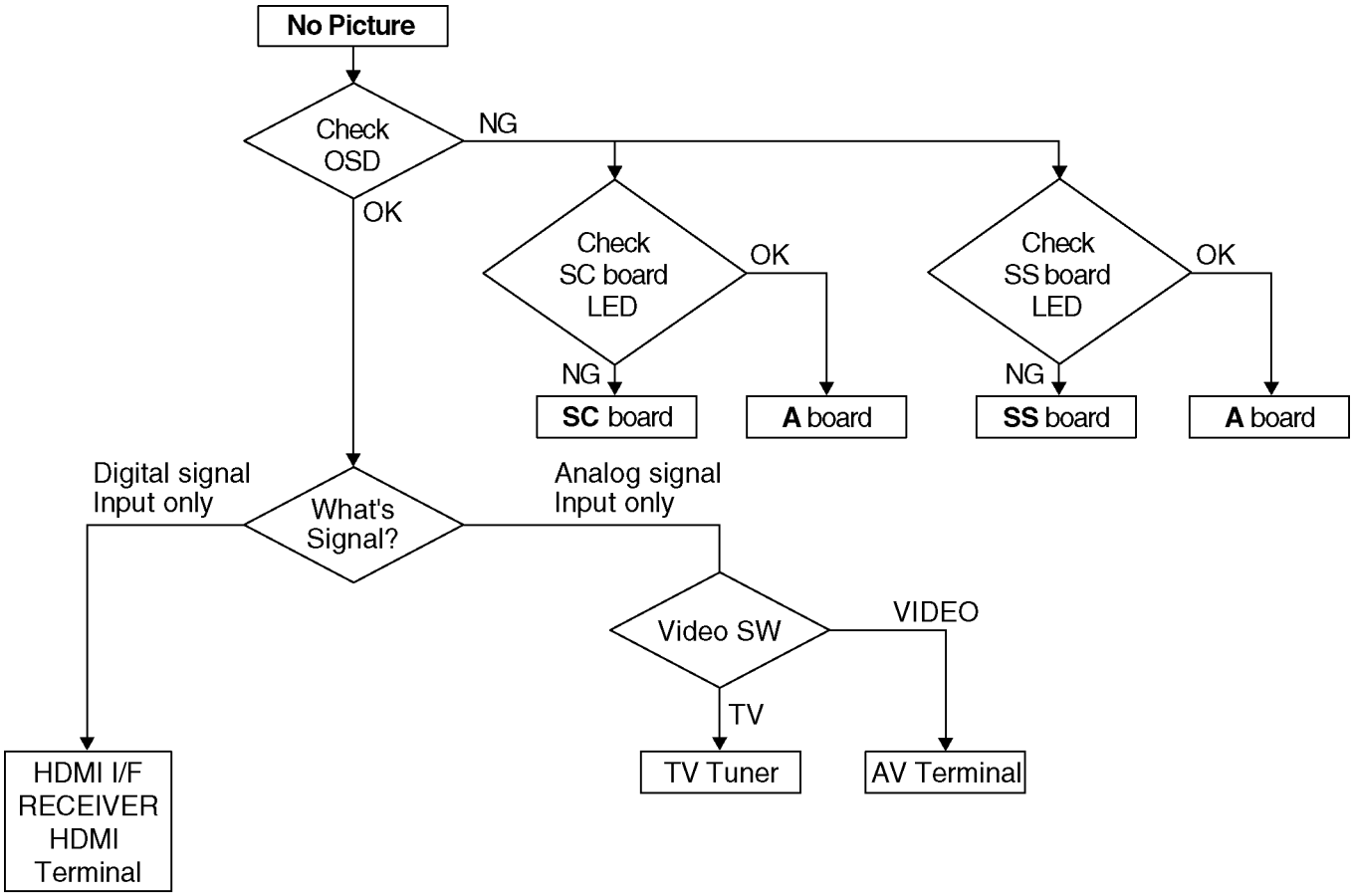

Drive circuits LED indicator

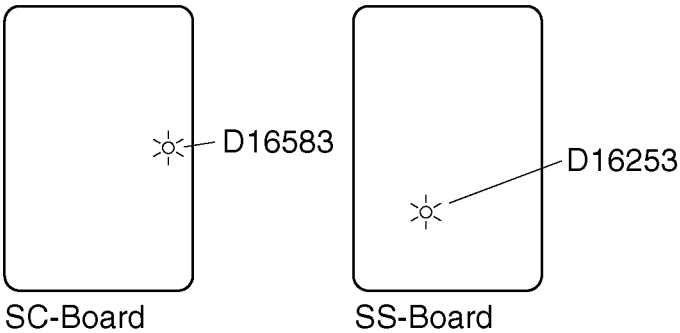

6.5. Local screen failure

Plasma display may have local area failure on the screen. Fig-1 is the possible defect P.C.B. for each local area.

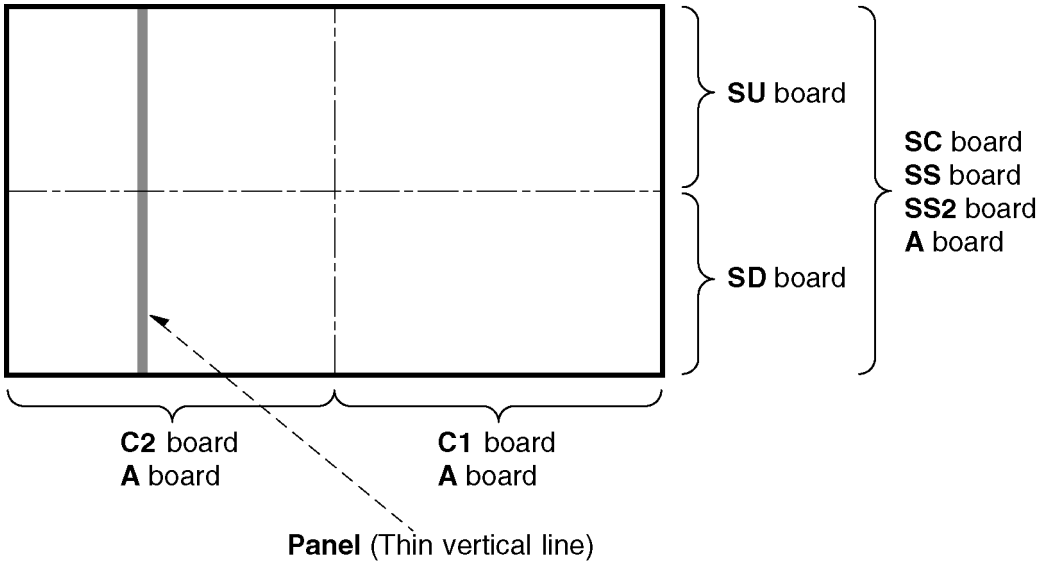

<Local screen failure chart>

Fig-1

7 Service Fixture & Tools

7.1. SC jig

Purpose:
To find the failure board (SC or SU/SD) when the power LED is blinking 7 times.
SC jig:
Jumper connector to connect to SC50 connector on SC board
Part number:
TZSC09187
How to use:
Caution: Remove SC jig from SC board after inspection.

1. Remove all connector between SC board and SU/SD board to isolate SC board from both SU and SD board electrically.
   Note: The board will be damaged if all connector is not removed (for example; remove connector only for SU board and stay connecting with SD board. The board will be damaged.)
2. Connect SC jig to connector SC50 at left bottom side of SC board
3. Turn on the TV/Display Unit and confirm the power LED blinking.
   LED blinking: Possible cause of failure is in SC board
   No LED blinking (Lighting or no lighting): Possible cause of failure is in SU or SD board
4. After inspection, turn off the TV/Display Unit and wait a few minutes to discharge.
5. Remove SC jig from SC board.

Remark: This SC jig can be used for all 2010 Plasma TV and Plasma Display.

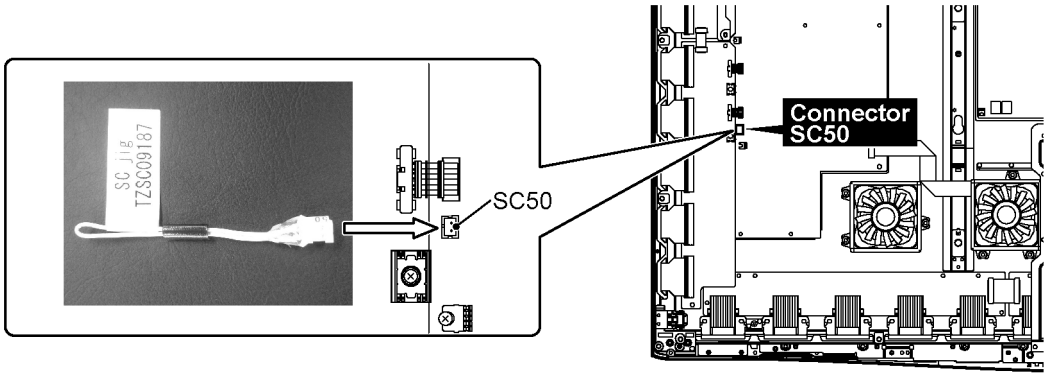

8 Disassembly and Assembly Instructions

8.1. Remove the Rear cover

1. See PCB Layout (See Section 3)

8.2. Remove the AC inlet

Caution:

To remove P.C.B. wait 1 minute after power was off for discharge from electrolysis capacitors.

1. Unlock the cable clampers to free the cable.
2. Disconnect the connector (P9).
3. Remove the screw (×1 ➡) and remove the AC inlet.

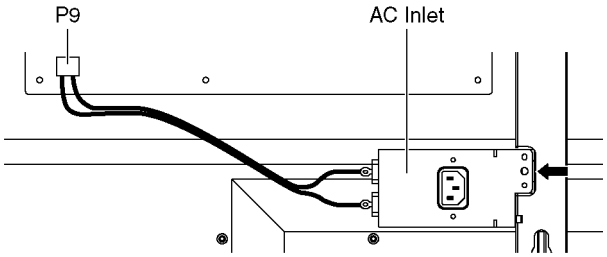

8.3. Remove the P-Board

Caution:

To remove P.C.B. wait 1 minute after power was off for discharge from electrolysis capacitors.

1. Unlock the cable clampers to free the cable
2. Disconnect the connectors (P2, P6, P7, P9, P11, P34 and P35).
3. Remove the screws (×9 ➡) and remove the P-Board.

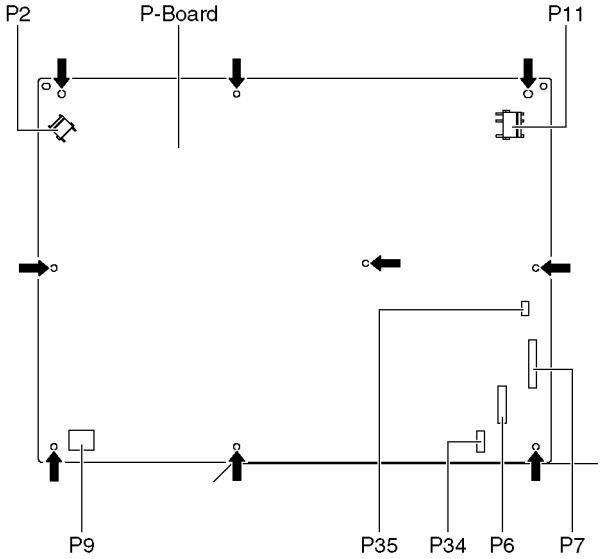

8.4. Remove the Side terminal cover and the Side shield metal

1. Remove the screws (×2 ➡, ×1 ⇨, ×1 ➡).
2. Remove the Side terminal cover.

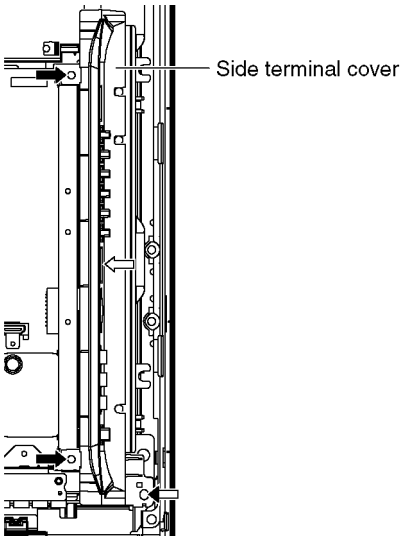

3. Remove the Side shield metal.

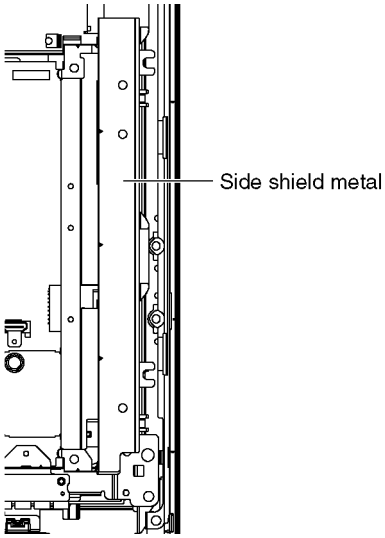

8.5. Remove the Tuner unit

1. Remove the Side terminal cover and the Side shield metal. (See section 8.4.)
2. Unlock the cable clampers to free the cable.
3. Disconnect the connectors (A1, A6, A7 and A11).
4. Disconnect the flexible cables (A20, A31 and A32).
5. Remove the screws (×2 ➡) and remove the Tuner unit.

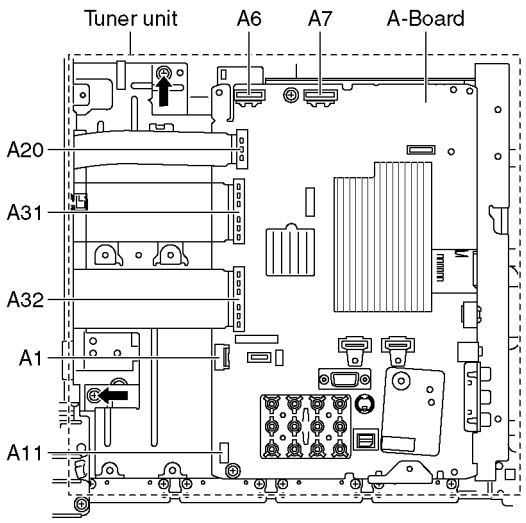

8.6. Remove the A-Board

1. Remove the Tuner unit. (See section 8.5.)
2. Remove the screws (×2 ➡) and remove the A-Board.

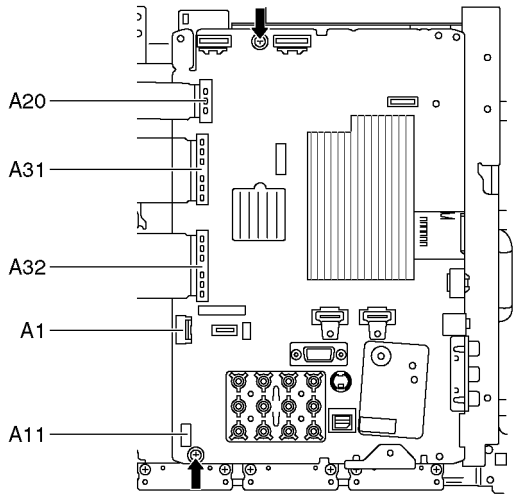

8.7. Remove the Speakers

1. Unlock the cable clampers to free the cable.
2. Disconnect the Speaker terminal.
3. Remove the screws (×2 ➡ each) and remove the Speakers (L, R).

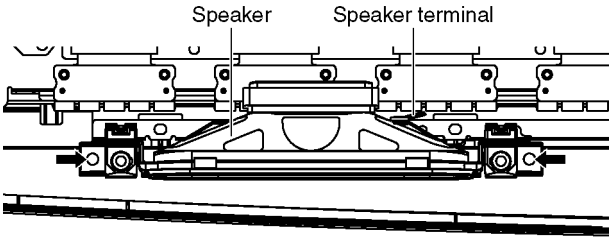

8.8. Remove the SU-Board

1. Remove the flexible cables (SU1, SU2, SU3 and SU4) connected to the SU-Board.
2. Remove the flexible cable (SU11-SD11) and the bridge connector (SC41-SU41).
3. Remove the molding prop (×1 ⇨).
4. Remove the screws (×2 ➡, ×2 ➡) and remove the SU-Board.

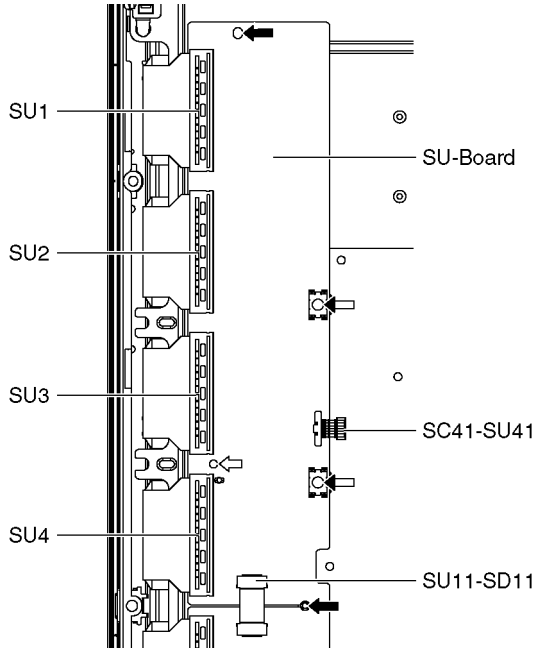

8.9. Remove the SD-Board

1. Remove the flexible cables (SD1, SD2, SD3 and SD4) connected to the SD-Board.
2. Remove the flexible cable (SU11-SD11) and the bridge connectors (SC42-SD42 and SC46-SD46).
3. Remove the molding prop (×1 ⇨).
4. Remove the screws (×2 ➡, ×2 ➡) and remove the SD-Board.

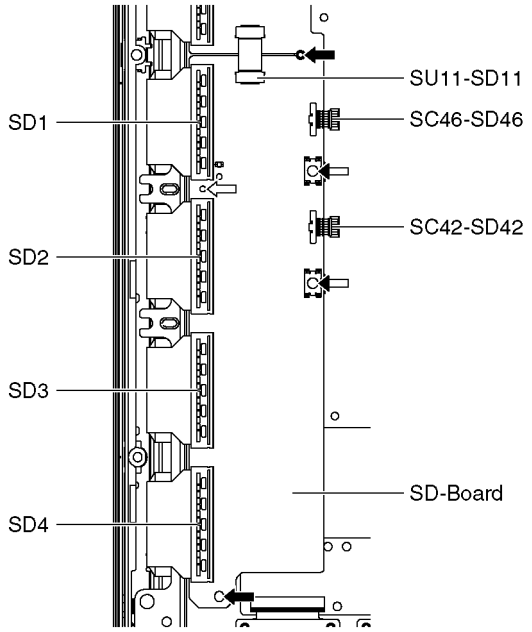

8.10. Remove the SC-Board

1. Remove the SU-Board and SD-Board. (See section 8.8. and 8.9.)
2. Unlock the cable clampers to free the cable.
3. Disconnect the connectors (SC2).
4. Disconnect the flexible cable (SC20).
5. Remove the screws (×7 ➡) and remove the SC-Board.

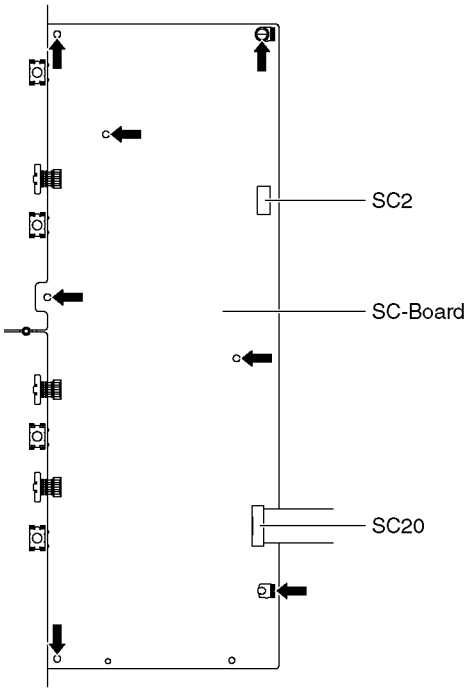

8.11. Remove the SS2-Board

1. Remove the Tuner unit. (See section 8.5.)
2. Disconnect the bridge connector (SS21-SS24) and disconnect the flexible cable (SS58).
3. Remove the screws (×2 ➡) and remove the SS2-Board.

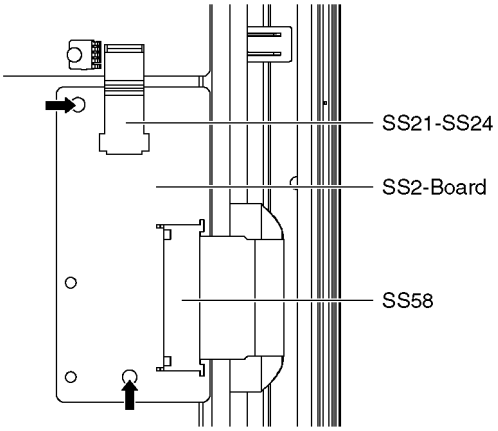

8.12. Remove the SS-Board

1. Remove the Tuner unit. (See section 8.5.)
2. Unlock the cable clampers to free the cable.
3. Disconnect the connectors (SS11 and SS33).
4. Disconnect the flexible cables (SS61 and SS64).
5. Disconnect the bridge connector (SS21-SS24).
6. Remove the screws (×6 ➡) and remove the SS-Board.

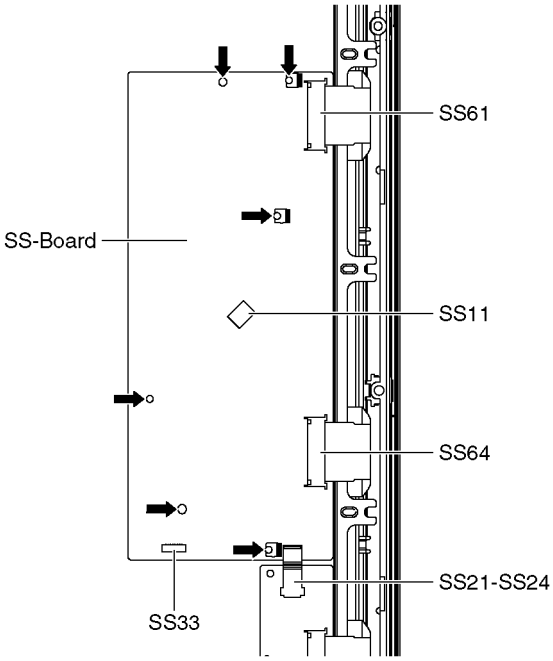

8.13. Remove the Hanger metals and the Stand brackets

1. Remove the Plasma panel section from the servicing stand and lay on a flat surface such as a table (covered by a soft cloth) with the Plasma panel surface facing downward.
2. Remove the Stand brackets (L, R) fastening screws (×3 ➡ each) and remove the Stand bracket metals (L, R) and the Stand brackets (L, R).

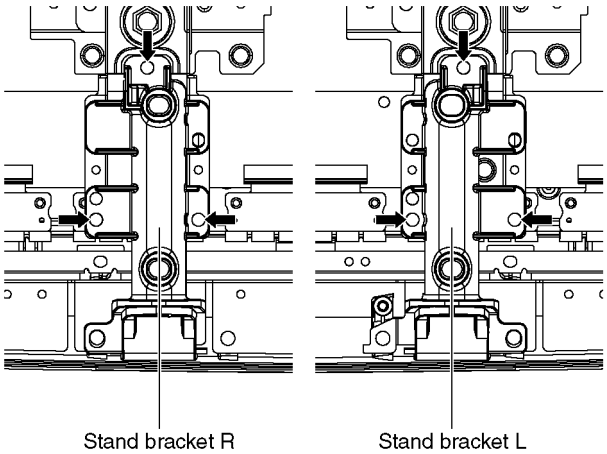

3. Remove the Hanger metals (L, R) fastening screws (×2 ➡ each) and remove the Hanger metals (L, R).

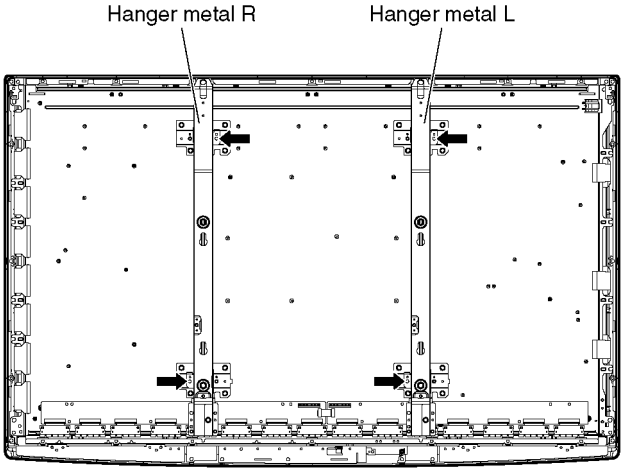

8.14. Remove the C1-Board

1. Remove the Hanger metal R and the Stand bracket R. (See section 8.13.)
2. Remove the flexible cable holder fastening screws (×16 ⇨).
3. Disconnect the flexible cables (CB1, CB2, CB3, CB4, CB5, CB6, CB7 and CB8).
4. Disconnect the flexible cables (C10 and C11).
5. Remove the screws (×5 ➡) and remove the C1-Board.

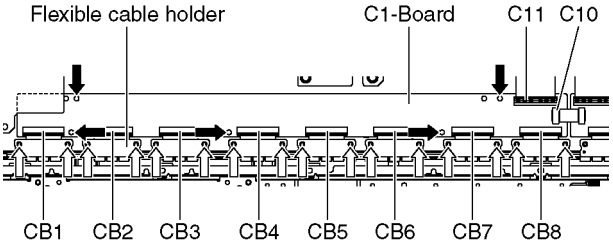

8.15. Remove the C2-Board

1. Remove the Tuner unit. (See section 8.5.)
2. Remove the Hanger metal L and the Stand bracket L. (See section 8.13.)
3. Remove the flexible cable holder fastening screws (×14 ⇨).
4. Disconnect the flexible cables (CB9, CB10, CB11, CB12, CB13, CB14 and CB15).
5. Disconnect the flexible cables (C20 and C21).
6. Disconnect the connectors (C23 and C25).
7. Remove the screws (×4 ➡) and remove the C2-Board.

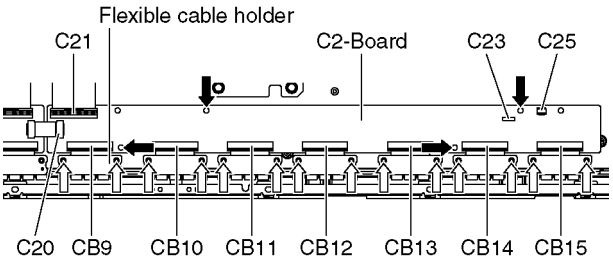

8.16. Remove the S-Board

1. Remove the screws (×2 ➡) and remove the S-Board unit.

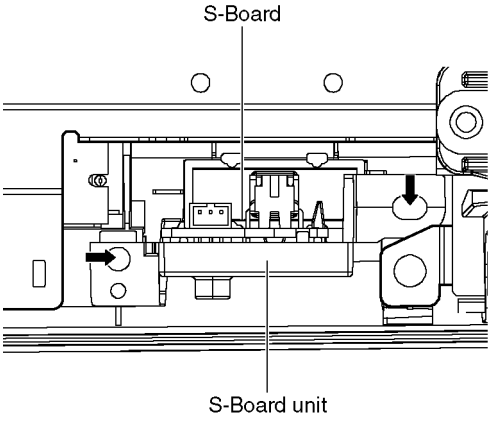

2. Disconnect the connector (S1B).
3. Remove the Power Button.
4. Remove the screw (×1 ➡) and remove the S-Board.

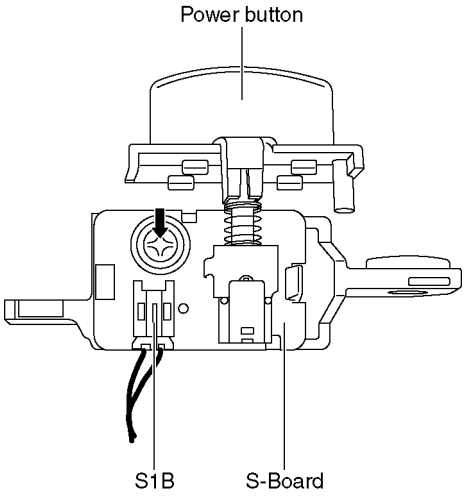

8.17. Remove the Plasma panel section from the Cabinet assy (glass)

1. Remove the plasma panel fastening screws (×3 ➡) and remove the cabinet assy.

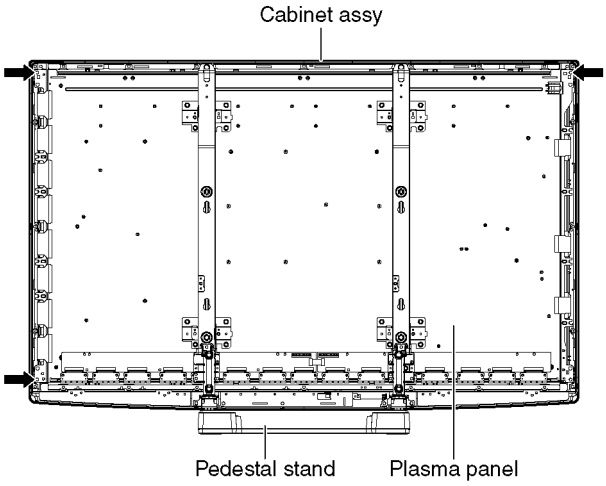

2. For leaving the cabinet assy from the plasma panel, pull the bottom of the cabinet assy forward, lift, and remove.

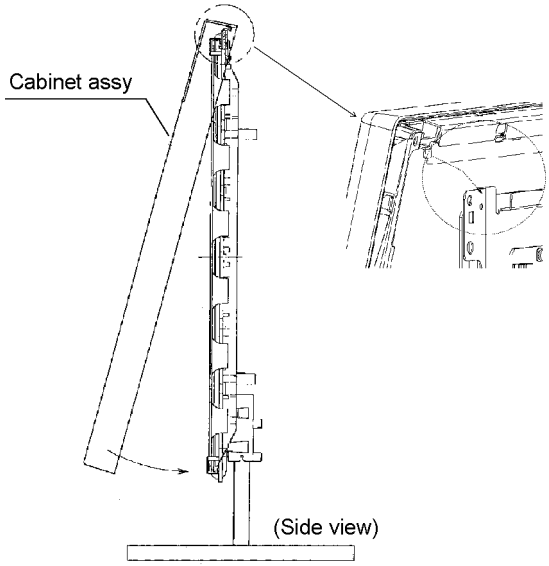

8.18. Remove the Glass holders

1. Remove the Cabinet assy. (See section 8.17.)
2. Remove the screws (×7 ➡).
3. Remove the Glass holder bottom rear.
4. Remove the screws (×4 ➡).
5. Remove the Glass holder side (L, R).
6. Remove the screws (×7 ⇨).
7. Remove the Glass holder top rear and the Glass holder top front.
8. Remove the Glass holder bottom front.

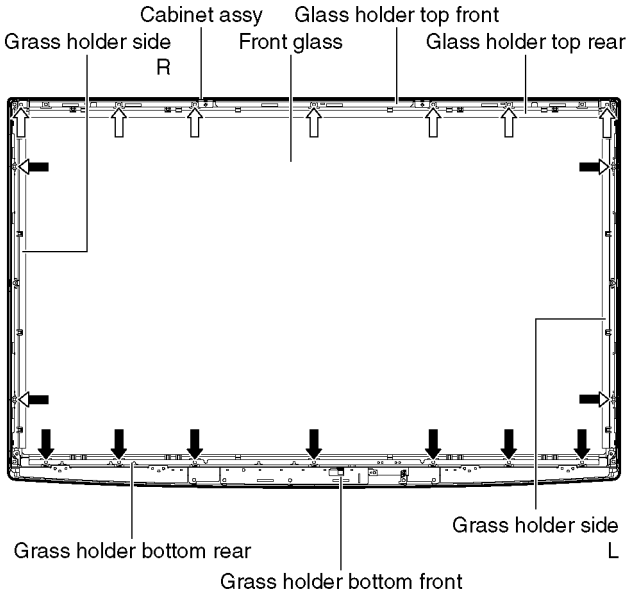

8.19. Remove the K-Board

1. Remove the Glass holders. (See section 8.17.)
2. Remove the screw (×1 ➡).
3. Remove the claw (×1 ⇨).
4. Disconnect the connector (K1) and Remove the K-Board from LED Panel.

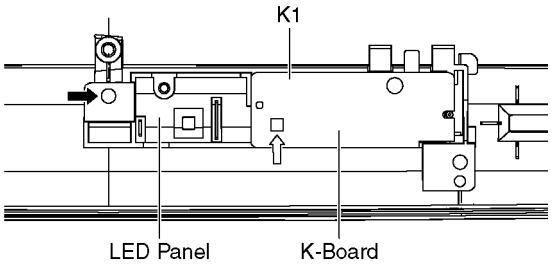

8.20. Replace the plasma panel

Caution:

A new plasma panel itself without Hanger metals is fragile.

To avoid the damage to new plasma panel, carry a new plasma panel taking hold of the Hanger metals after assembling the Hanger metals and the Stand brackets.

1. Place a carton box packed a new plasma panel on the flat surface of the work bench.
2. Open a box and without taking a new plasma panel; Attach the C1-Board and the C2-Board, connect the flexible cables from the plasma panel to the C1-Board and the C2-Board, and fit the flexible cable holders.
3. Attach the Hanger metals and the Stand brackets to the new plasma panel.
4. Place the plasma panel on the servicing stand taking hold of the Hanger metals.
5. Attach the cabinet assy and each P.C.Board and so on, to the new plasma panel.

***When fitting the cabinet assy, be careful not to allow any debris, dust or handling residue to remain between the front glass and plasma panel.**

9 Measurements and Adjustments

9.1. Adjustment

9.1.1. Vsus selection

Caution:

When Plasma panel or A-board is replaced, Vsus should be set to LOW or HIGH.

Procedure

1. Go into main item [VSUS] in Service Mode. LOW or HIGH will be displayed.
2. Press [OK] button to go to TEST stage.
   White pattern without On-Screen Display will be displayed during TEST and CONF stage. Press [5] button to display the On-Screen Display.
3. Press [VOL (-)] button to set to LOW.
4. In LOW setting
   a. If no several dead pixel is visible remarkably in white pattern, press [3] button to go to CONF stage.
   b. If the several dead pixels are visible remarkably in white pattern, Set to HIGH by press [VOL (+)] button. Press [3] button to go to CONF stage if the symptom is improved.
5. Press [OK] button in CONF stage to store LOW or HIGH.
6. Exit Service Mode by pressing [Power] button.

Vsus selection in Service mode

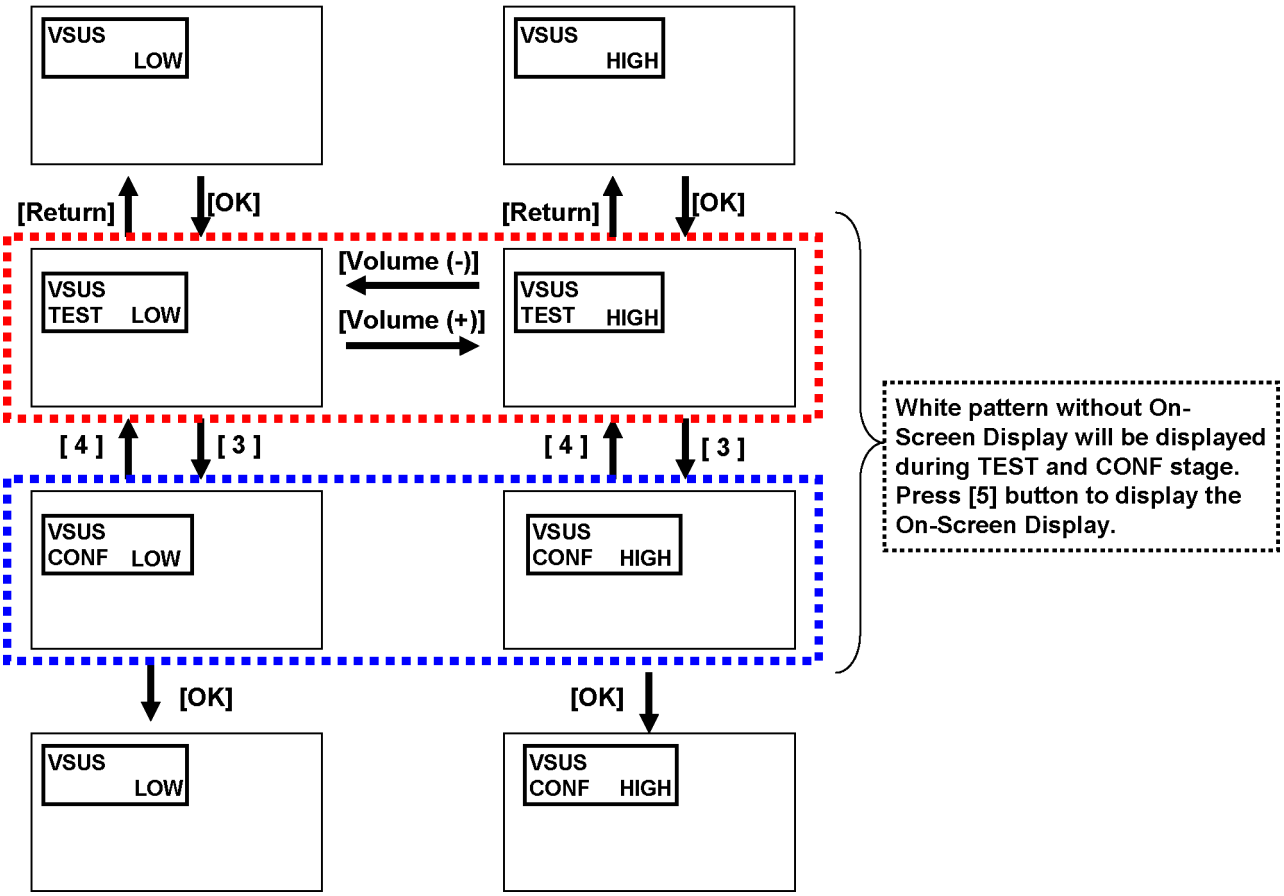

9.1.2. Sub-Contrast adjustment

Name of measuring instrument	Connection	Remarks
RF generator Base Band signal generator HD signal generator		

Steps	Remarks
Adjustment of TV (RF system) 1. Receive a RF PAL 100% Full White or Split Colour bar shown as below. 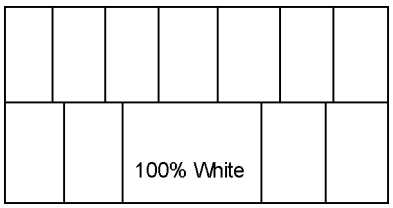 2. Goes into service mode. 3. Push a [1] or [2] key, and goes into adjustment mode for [CONTRAST]. Adjustment 1. The colour key yellow button of remote control is pushed. 2. The OSD character of sub-contrast becomes red. (Inside under automatic adjustment) 3. The OSD character of sub-contrast returns to black. 4. End.	**Note:** **Sub-contrast adjustment is unadjusted for AV/ HD input.** **But, when needing the adjustment chosen manually, please refer to [alternative method].**

Steps	Remarks
<u>Another procedure</u> Adjustment of AV system 1. PAL 100% Full White or Split Colour bar receive AV1(or AV2), shown as below. 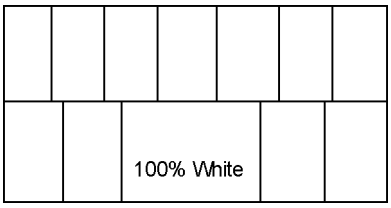 2. Goes into service mode. 3. Push [1] or [2] key, and goes into adjustment mode for [Contrast]. Adjustment 1. The colour key yellow button of remote control is pushed. 2. The OSD character of sub-contrast becomes red. (Inside under automatic adjustment) 3. The OSD character of sub-contrast returns to black. 4. End.	

Steps	Remarks
<u>Another procedure</u> Adjustment of HD system 1. At 1080i 100% Full White or Split colour bar receive component signal, as shown below. 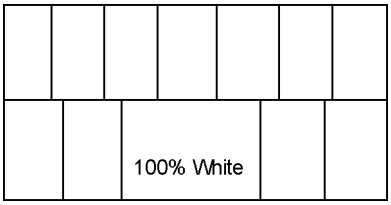 2. Goes into service mode. 3. Push [1] or [2] key, and goes into adjustment mode for [Contrast]. Adjustment 1. The colour key yellow button of remote control is pushed. 2. The OSD character of sub-contrast becomes red. (Inside under automatic adjustment) 3. The OSD character of sub-contrast returns to black. 4. End.	

9.1.3. White balance adjustment

Name of measuring instrument	Connection	Remarks
W/ B pattern Color analyzer (Minolta CA-100 or equivalent)	Panel surface	

Steps	Remarks
• Make sure the front panel to be used on the final set is fitted. • Make sure a color signal is not being shown before adjustment. • Put the color analyzer where there is little colour variation.	Picture menu : Dynamic ASPECT : 16:9

Adjustment	Remarks
1. Enter the Service mode. Please receive the external signal. Or, please select CVBS/YUV (no sync). 2. A number key [1] or [2] are operated and [WB-ADJ] is displayed. Check that the color balance is [COOL]. 3. A number key [0] is operated and select [METHOD]. 4. A number key [5] is operated and [INNER PATTERN] is displayed. INNER PATTERN 5. Select [G-CUTOFF] item, using the number-key [3] or [4], and set to [80], using the volume-key [+] or [-]. Also, [B-CUTOFF] and [R-CUTOFF] set to [80] 6. Set [G-DRIVE] at [D0]. 7. Touch the signal receiver of color analyzer to the INNER PATTERN's center, and adjust B drive and R drive so x, y become the [COLOR TEMP COOL] in the below table1. 8. All RGB drive increase so that the maximum drive value of RGB may become [FF]. ([ALL-DRIVE] set to [FF].) 9. Set color balance to [NORMAL] using [7] key. 10. Fix G-CUTOFF, B-CUTOFF and R-CUTOFF at [80]. 11. Set [G-DRIVE] at [D0]. 12. Adjust B-DRIVE and R-DRIVE so the INNER PATTERN’s x, y become the [COLOR TEMP NORMAL] in the below table1. 13. All RGB drive increase so that the maximum drive value of RGB may become [FF]. ([ALL-DRIVE] set to [FF].) 14. Set color balance to [WARM] using [7] key. 15. Fix G-CUTOFF, B-CUTOFF and R-CUTOFF at [80]. 16. Set [G-DRIVE] at [D0]. 17. Adjust B-DRIVE and R-DRIVE so the INNER PATTERN’s x, y become the [COLOR TEMP WARM] in the below table1. 18. All RGB drive increase so that the maximum drive value of RGB may become [FF]. ([ALL-DRIVE] set to [FF].) Table 1, Color temp. target value	METHOD=01 copy adjustments

COLOR TEMP	x	y
COOL	0.280	0.288
NORMAL	0.292	0.302
WARM	0.313	0.328

10 Block Diagram

10.1. Main Block Diagram

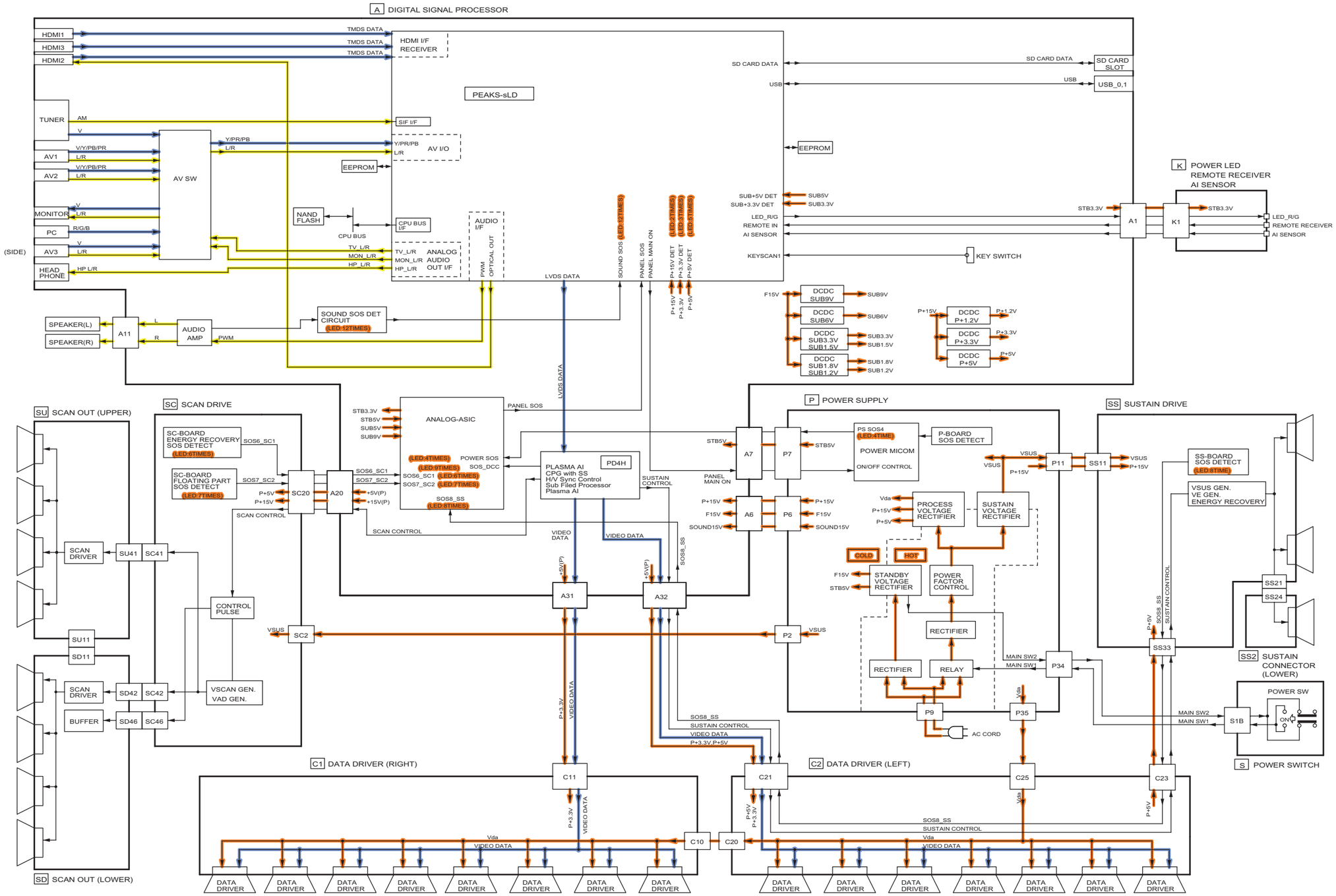

10.2. Block (1/4) Diagram

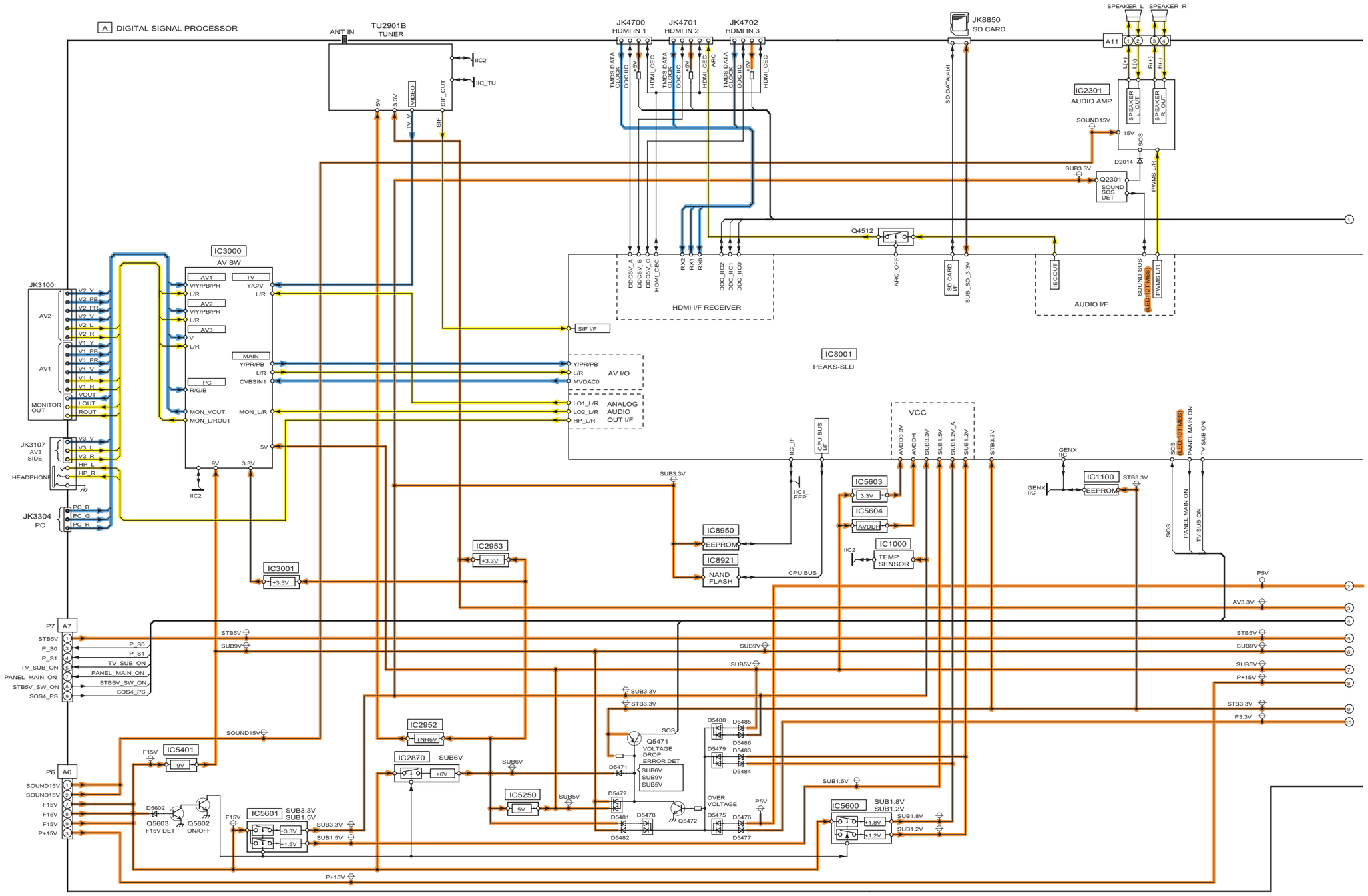

10.3. Block (2/4) Diagram

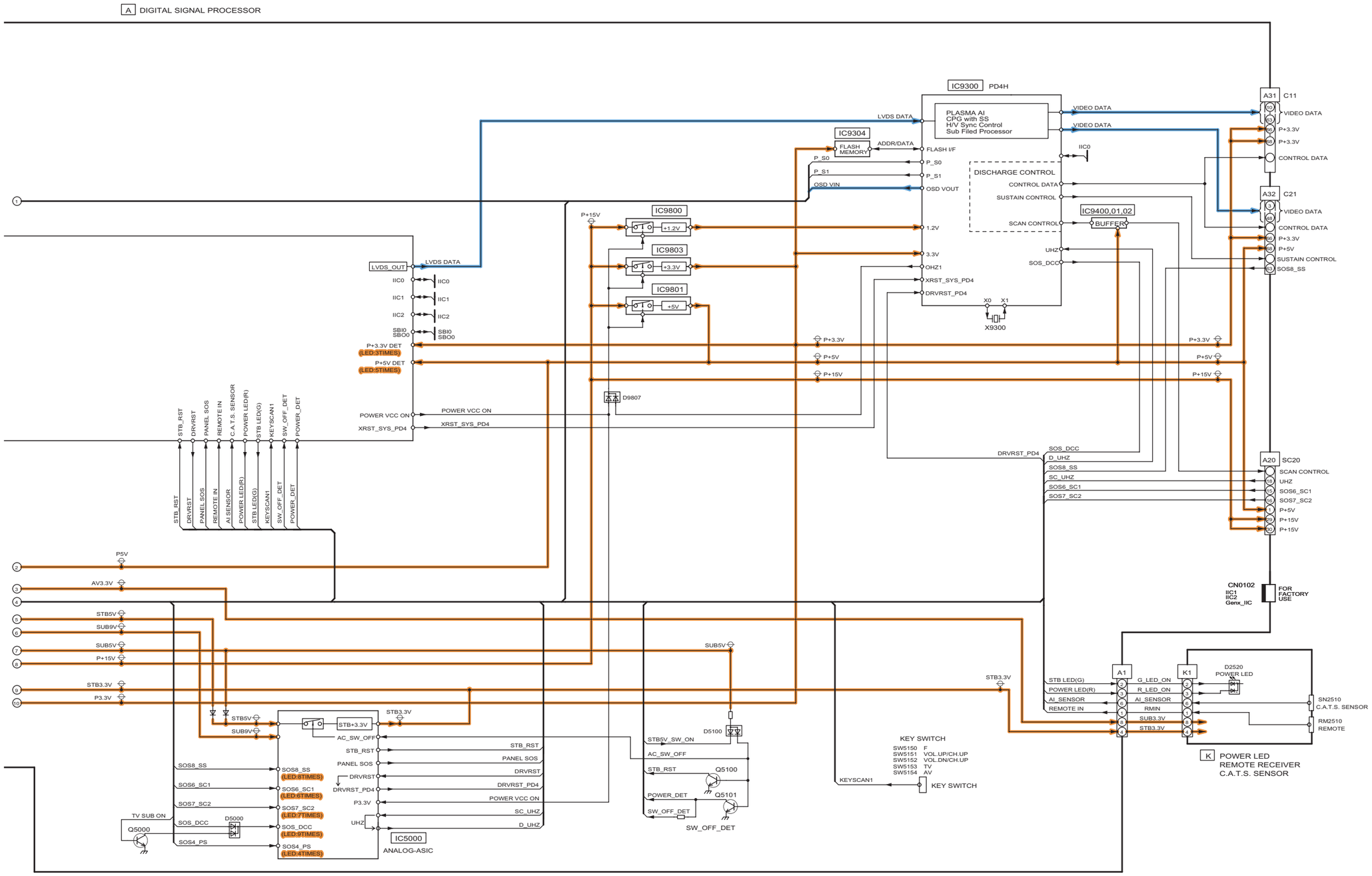

10.4. Block (3/4) Diagram

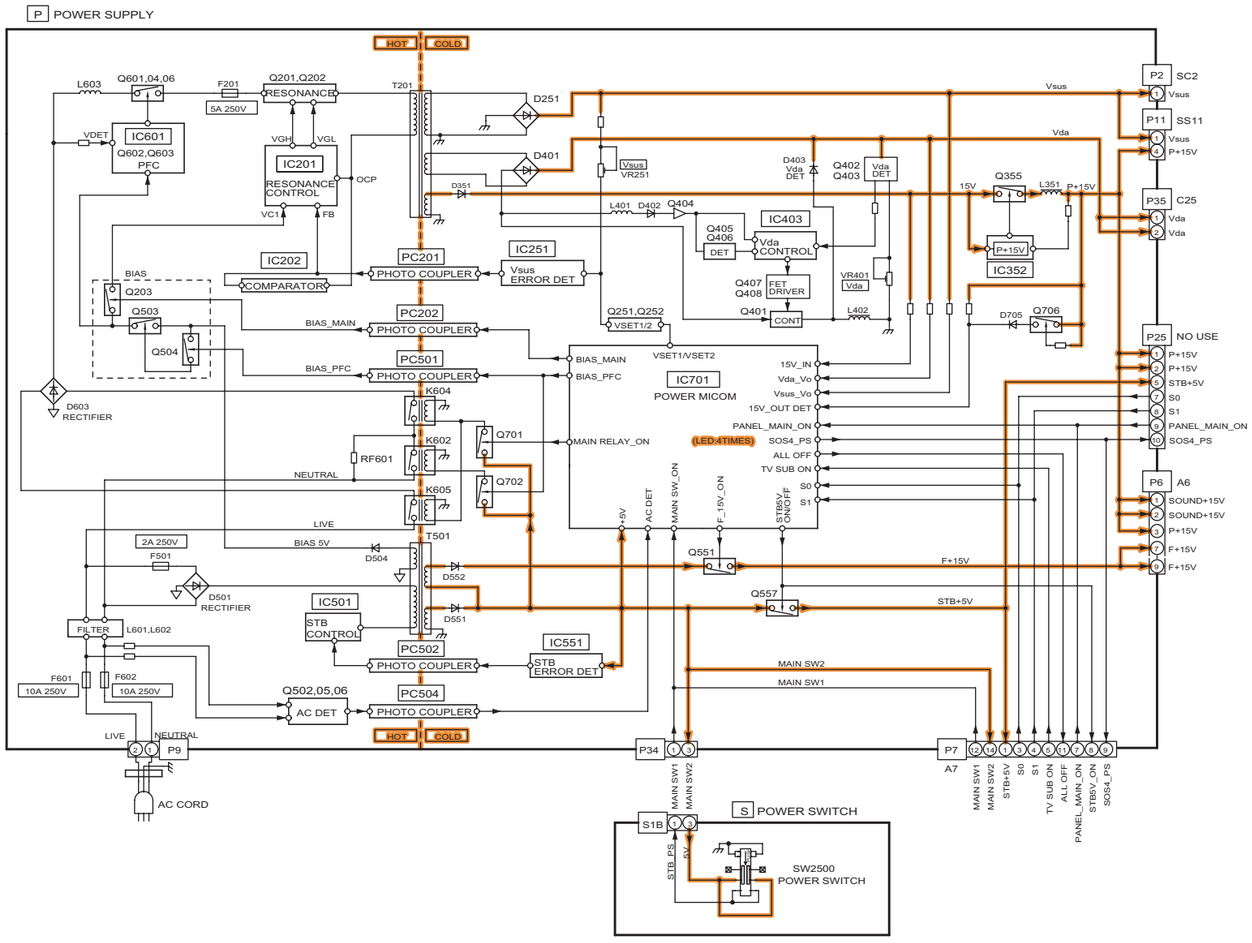

10.5. Block (4/4) Diagram

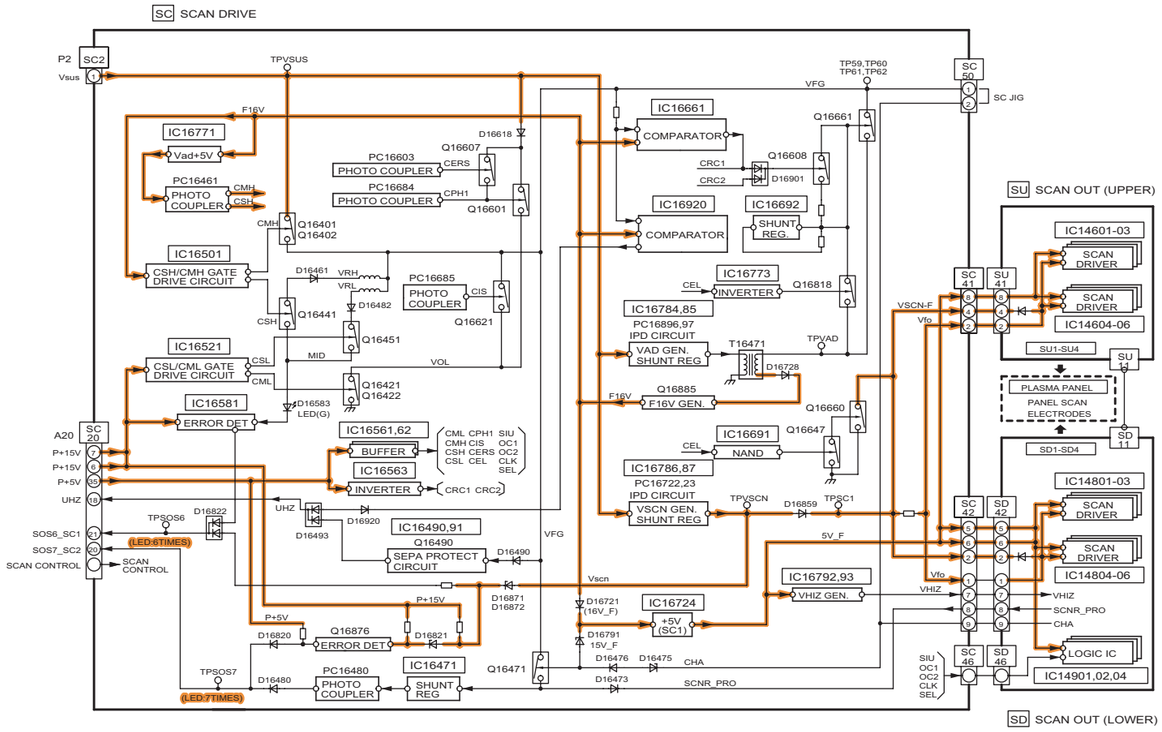

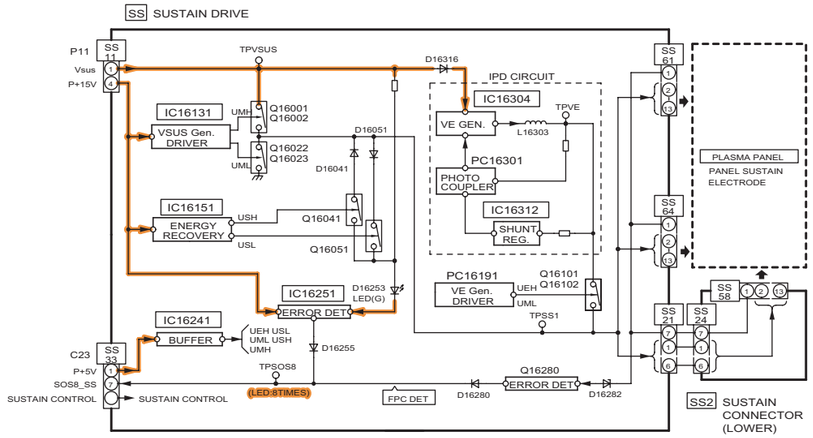

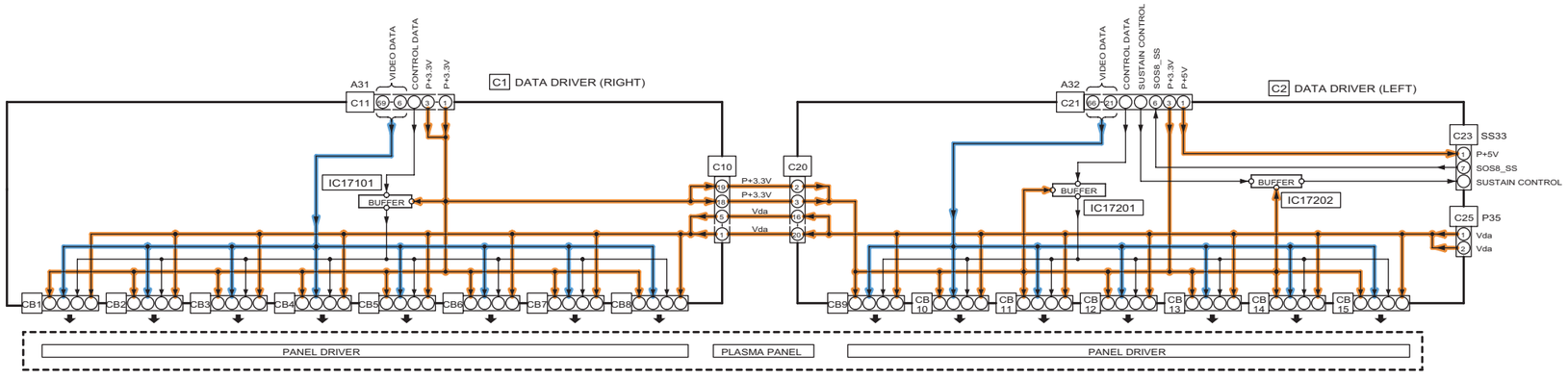

11 Wiring Connection Diagram

11.1. Caution statement.

Caution:

Please confirm that all flexible cables are assembled correctly.
Also make sure that they are locked in the connectors.
Verify by giving the flexible cables a very slight pull.

11.2. Wiring (1)

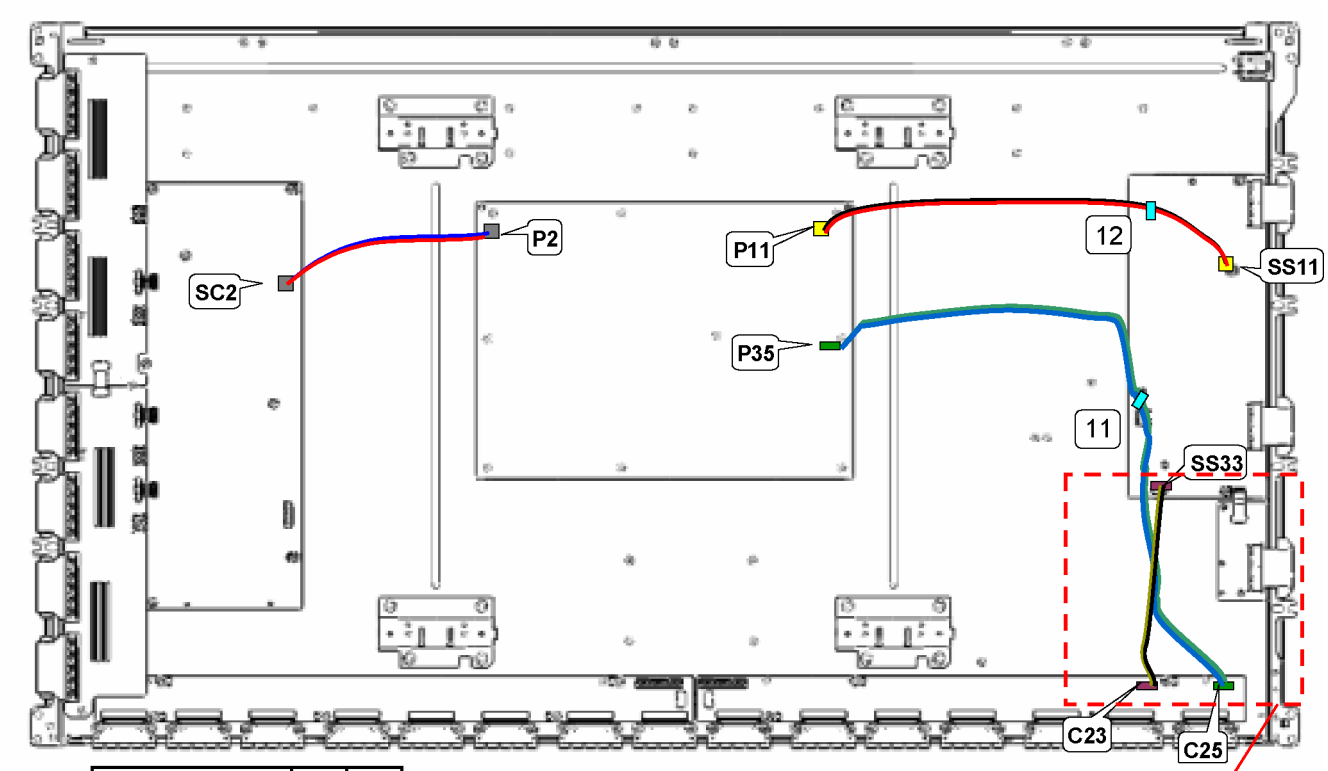

CONNECTOR	11	12
C23 - SS33		
P35 - C25	○	
P11 - SS11		○
SC2 - P2		

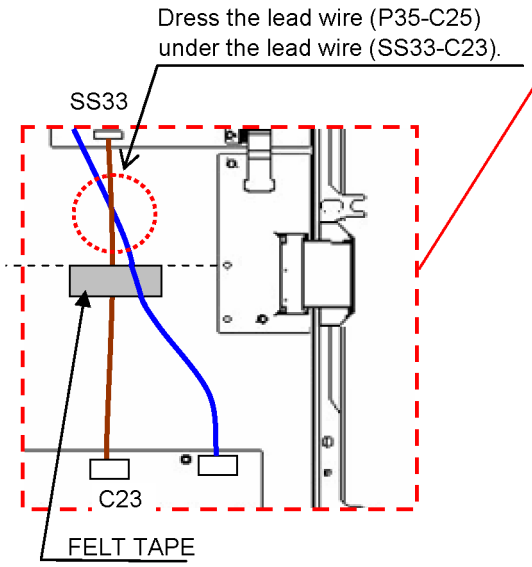

Fix the lead wire (SS33-C23) only to the PDP panel by FELT TAPE at the center of wire or the same line of a hole of SS2 board.
Reason: To avoid a contact with A-board fixing metal.

11.3. Wiring (2)

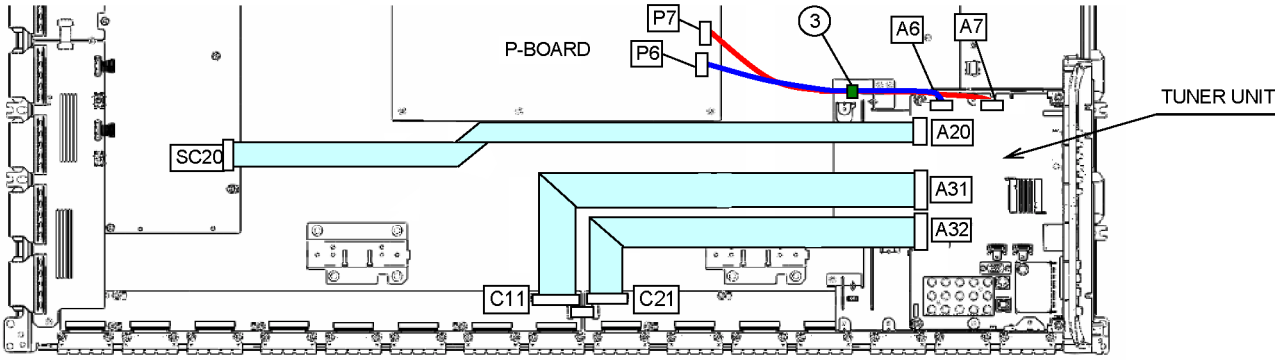

CONNECTOR No.	CLAMPER No.					
	3					
A20 - SC20						
A31 - C11						
A32 - C21						
A6 - P6	○					
A7 - P7	○					

11.4. Wiring (3)

CONNECTOR No.	CLAMPER No.						
	4						
P9 - AC INLET	○						

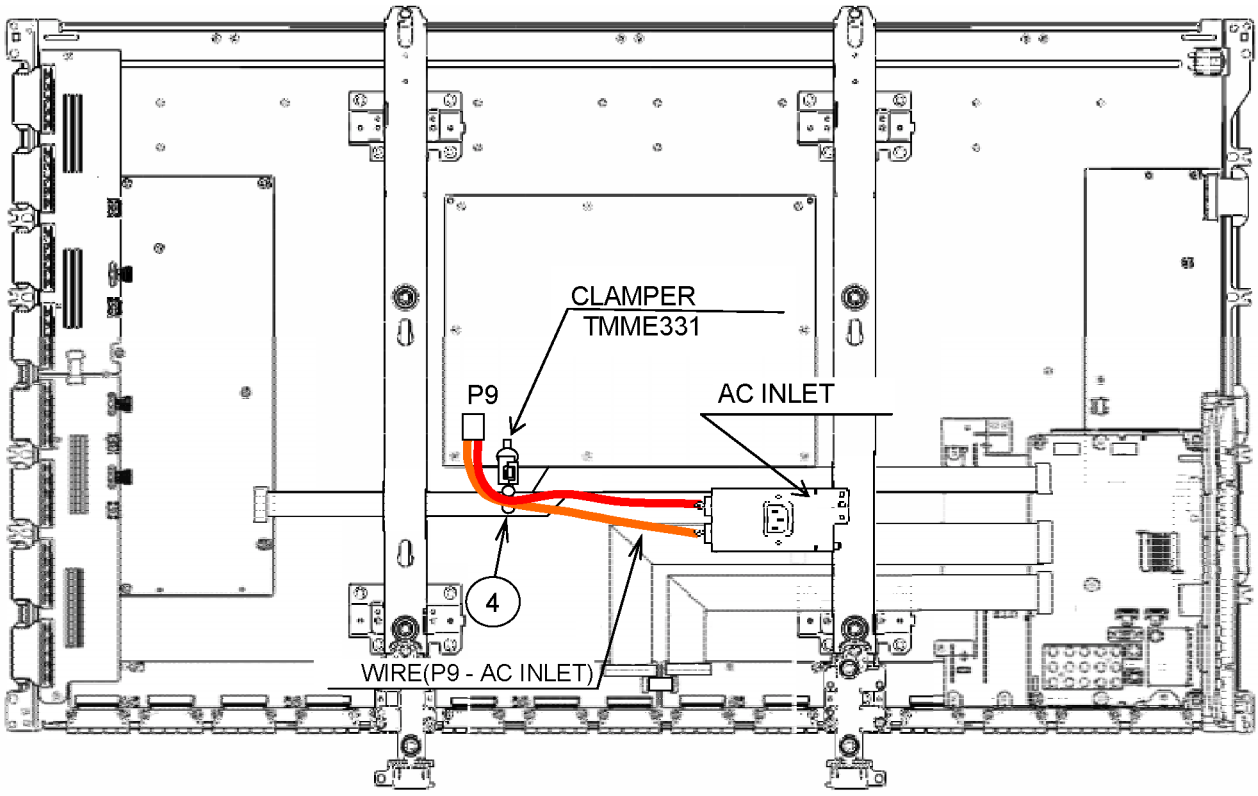

11.5. Wiring (4)

CONNECTOR No.	CLAMPER No.						
	5	6	7	8	9	10	11
A11 - SP R	○	○	○	○	○	○	
- SP L							
K1 - A1				○	○	○	
S1B - P34				○	○		○

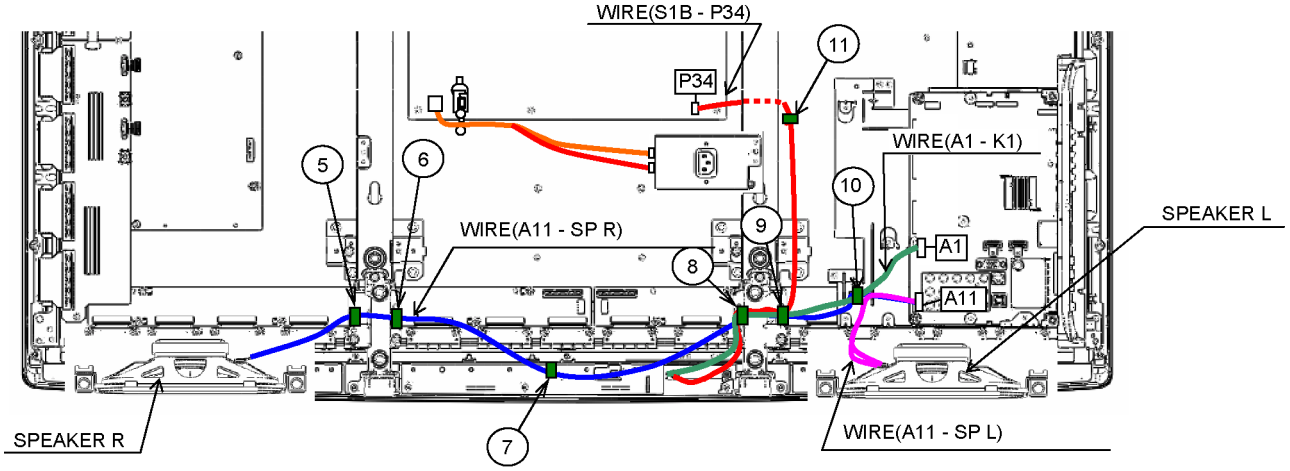

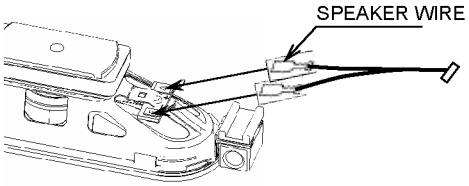

12 Schematic Diagram

12.1. Schematic Diagram Note

Notes:

1. **Resistor**
   Unit of resistance is OHM [Ω] (K=1,000, M=1,000,000).
2. **Capacitor**
   Unit of capacitance is µF, unless otherwise noted.
3. Coil
   Unit of inductance is H, unless otherwise noted.
4. Test Point
   : Test Point position
5. Earth Symbol
   : Chassis Earth (Cold) : Line Earth (Hot)
6. Voltage Measurement
   Voltage is measured by a DC voltmeter.
   Conditions of the measurement are the following:
   Power Source ..... AC220-240V, 50/60Hz (K/M/V)
   AC110-240V, 50/60Hz (P)
   Receiving Signal ..... Colour Bar signal (RF)
   All customer's controls ..... Maximum positions
7. When arrow mark (↗) is found, connection is easily found from the direction of arrow.
8. Indicates the major signal flow. : Video ➡ Audio ⇨
9. This schematic diagram is the latest at the time of printing and subject to change without notice.

Remarks:

1. The Power Circuit contains a circuit area which uses a separate power supply to isolate the earth connection.
   The circuit is defined by HOT and COLD indications in the schematic diagram. Take the follwing precautions.
   All circuits, except the Power Circuit, are cold.
   Precautions
   a. Do not touch the hot part or the hot and cold parts at the same time or you may be shocked.
   b. Do not short- circuit the hot and cold circuits or a fuse may blow and parts may break.
   c. Do not connect an instrument, such as an oscilloscope, to the hot and cold circuits simultaneously or a fuse may blow.
   Connect the earth of instruments to the earth connection of the circuit being measured.
   d. Make sure to disconnect the power plug before removing the chassis.

12.2. P-Board (1/3) Schematic Diagram

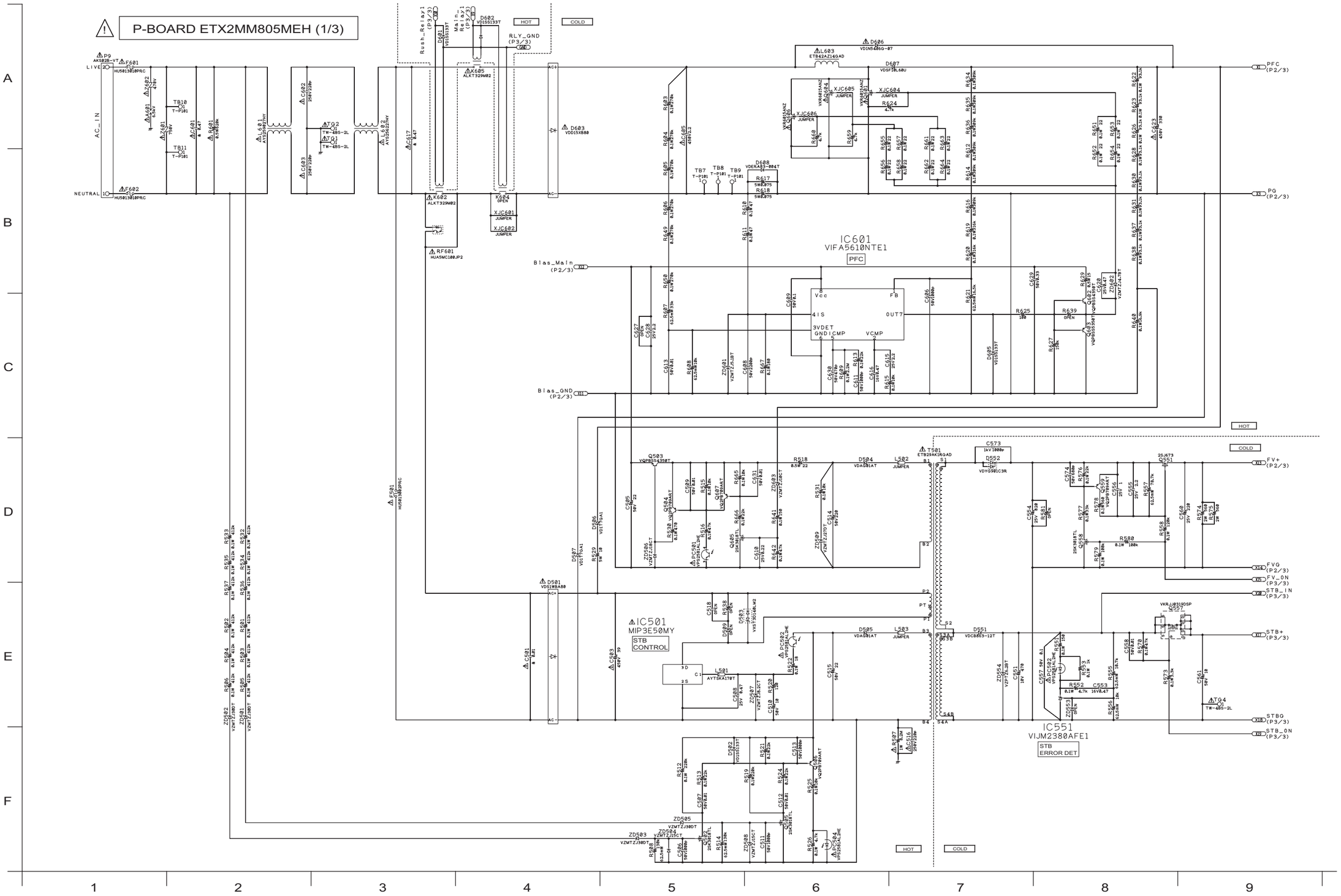

12.3. P-Board (2/3) Schematic Diagram

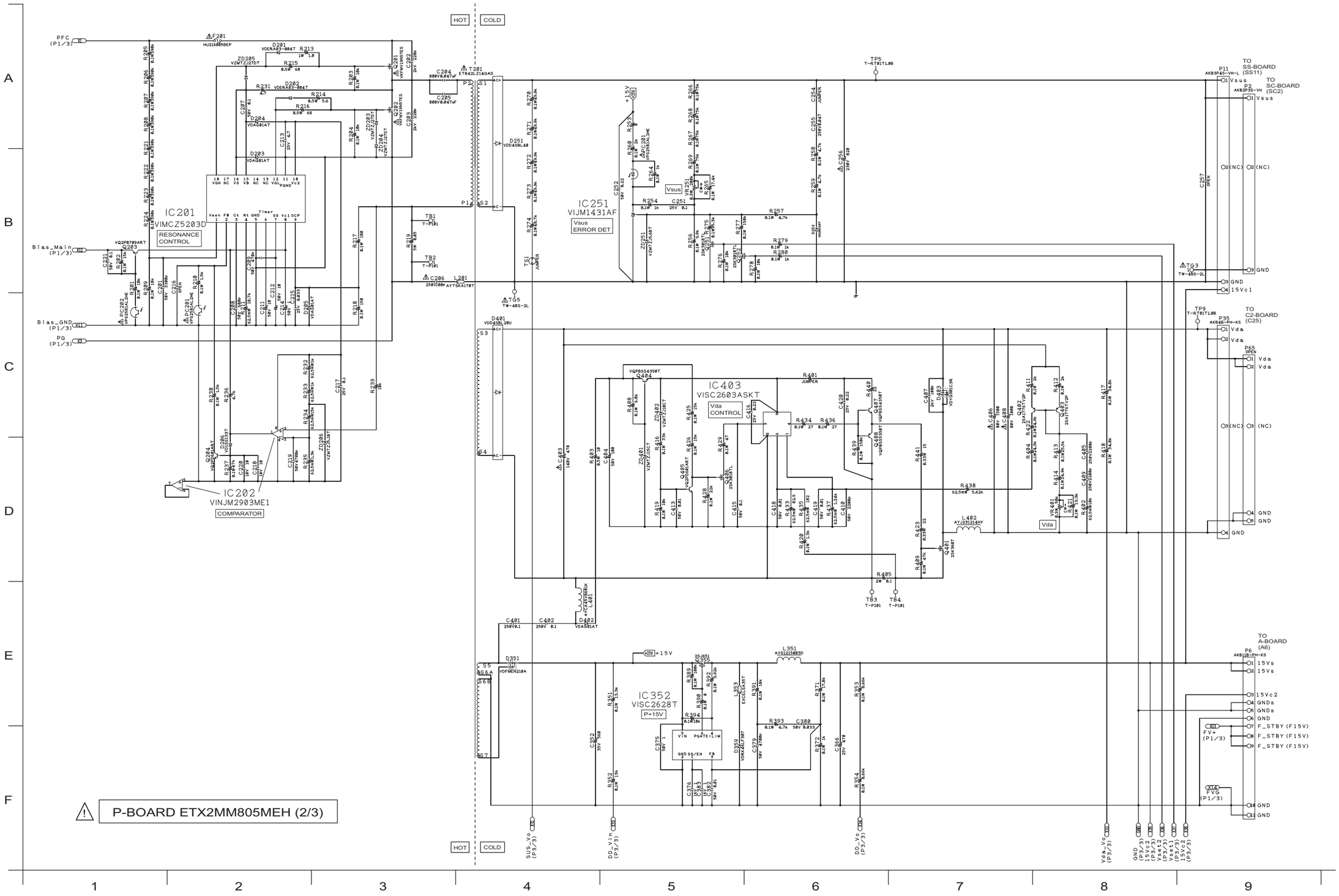

12.4. P-Board (3/3) Schematic Diagram

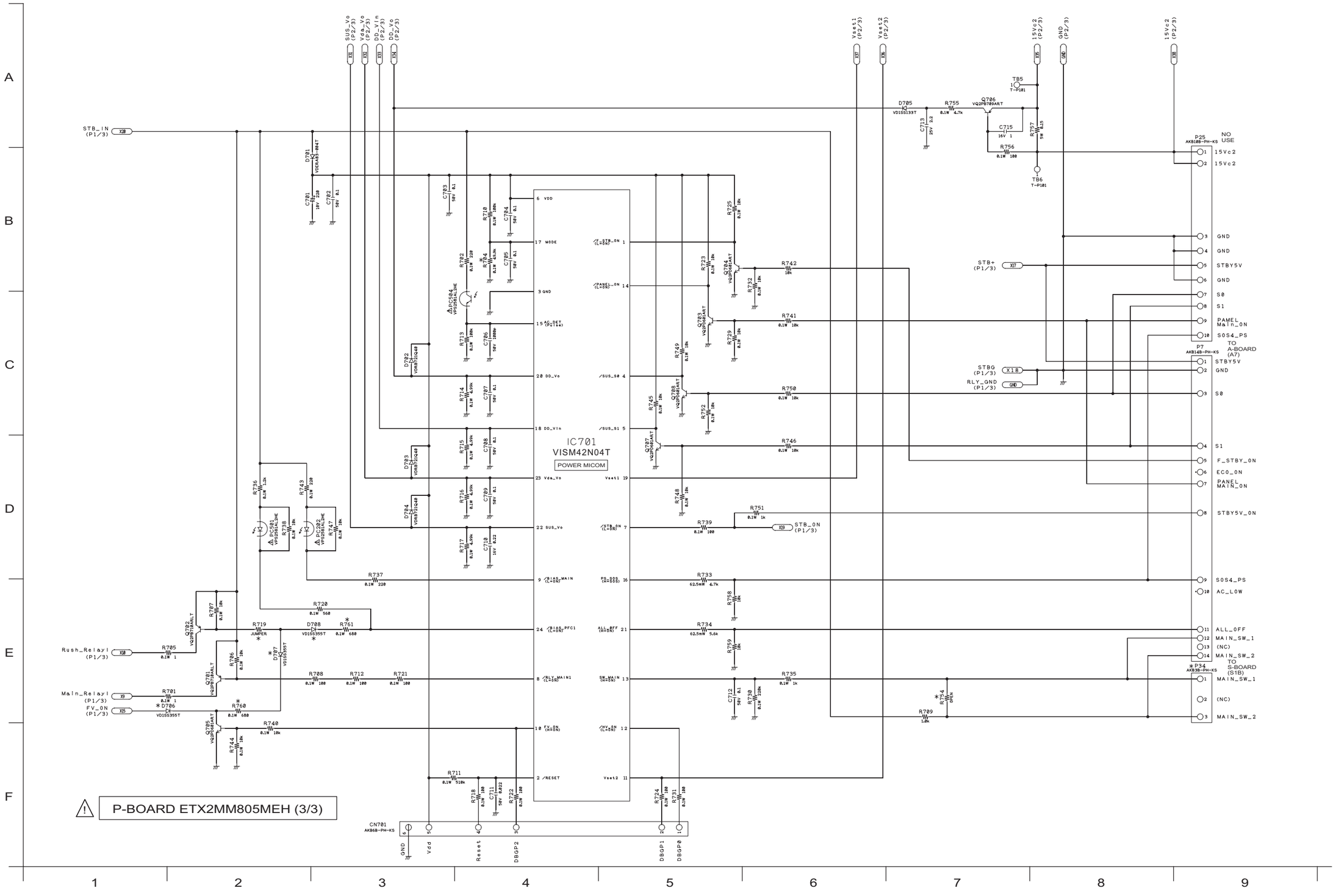

12.5. A-Board (1/19) Schematic Diagram

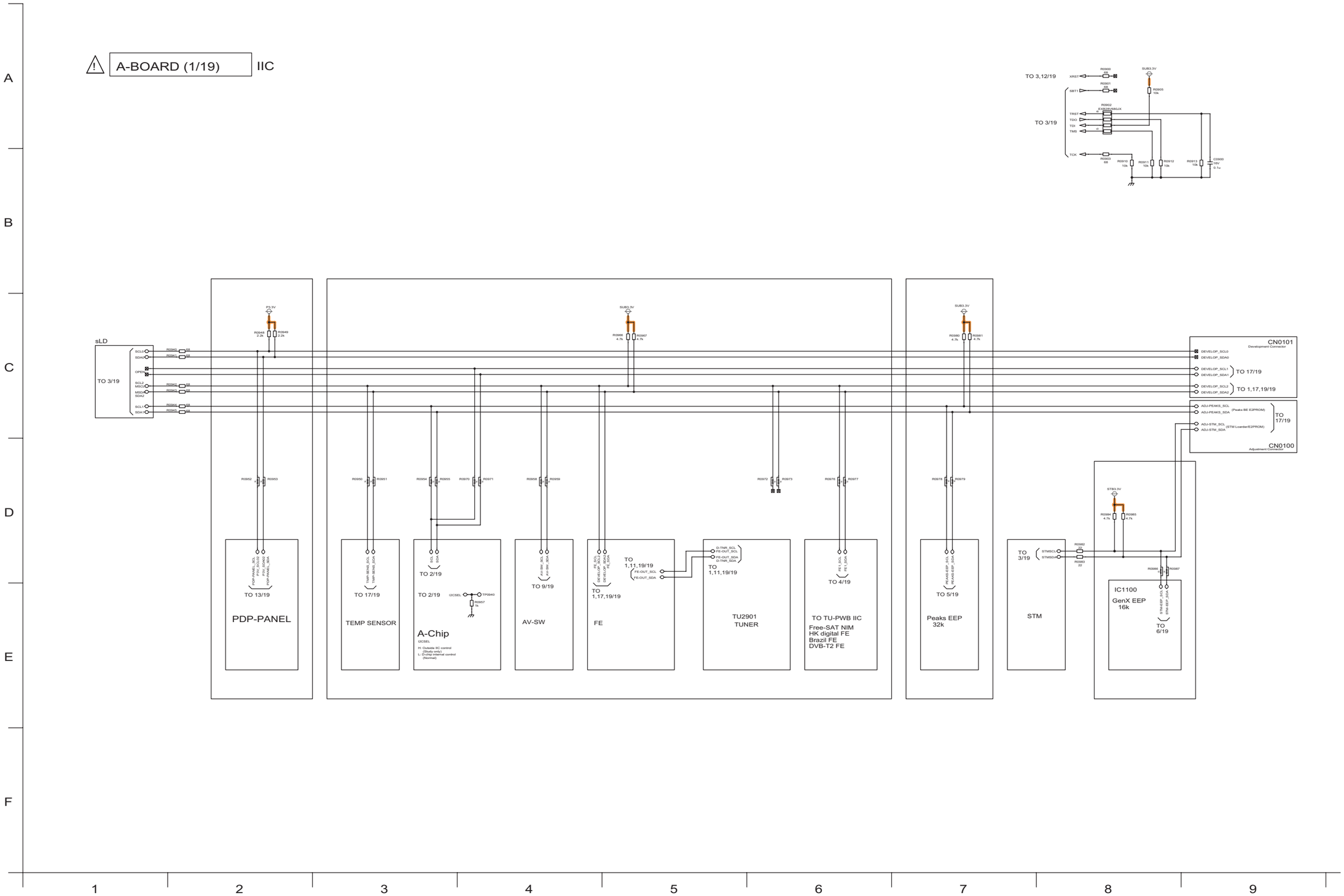

12.6. A-Board (2/19) Schematic Diagram

A-BOARD (2/19) Peaks-COMMON

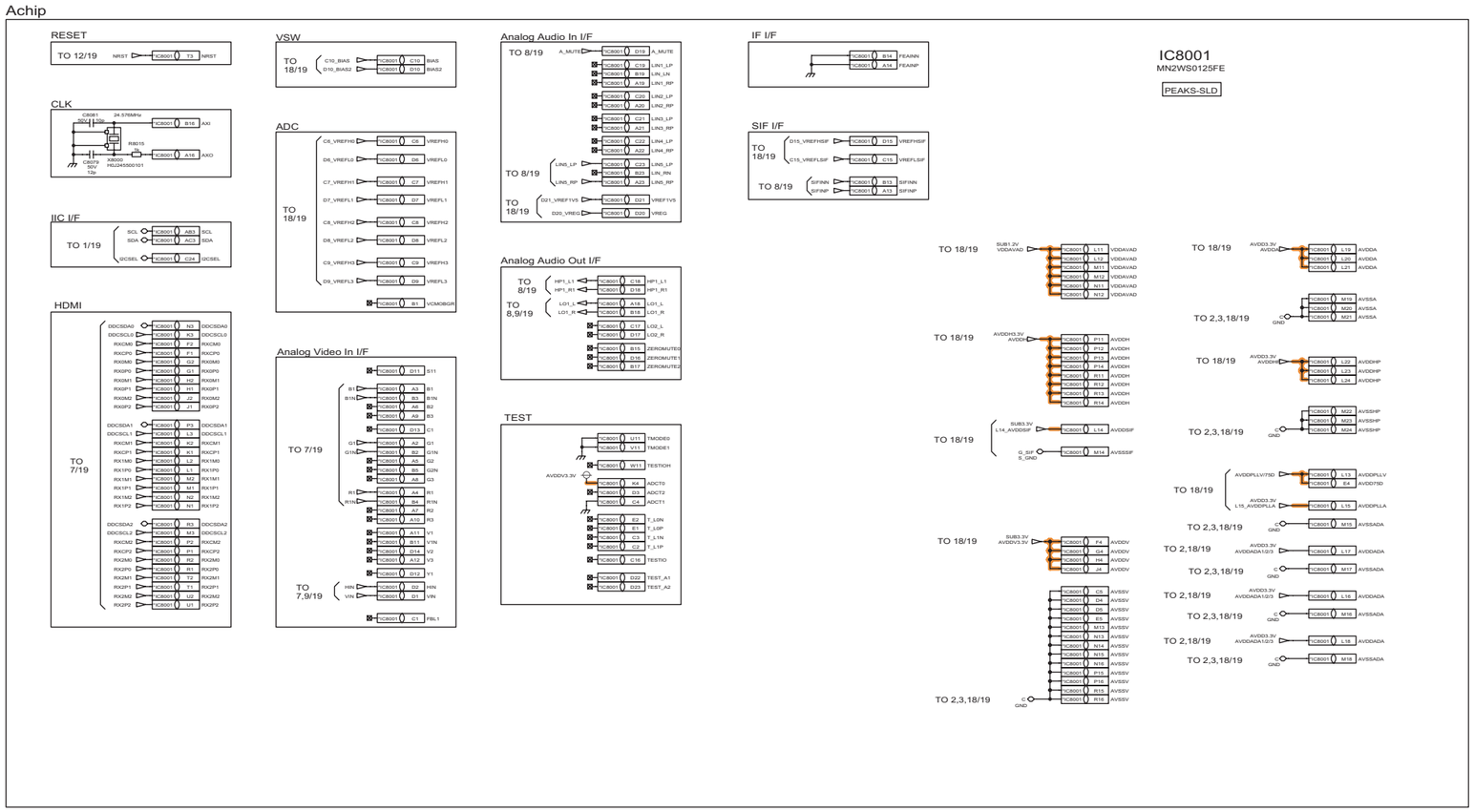

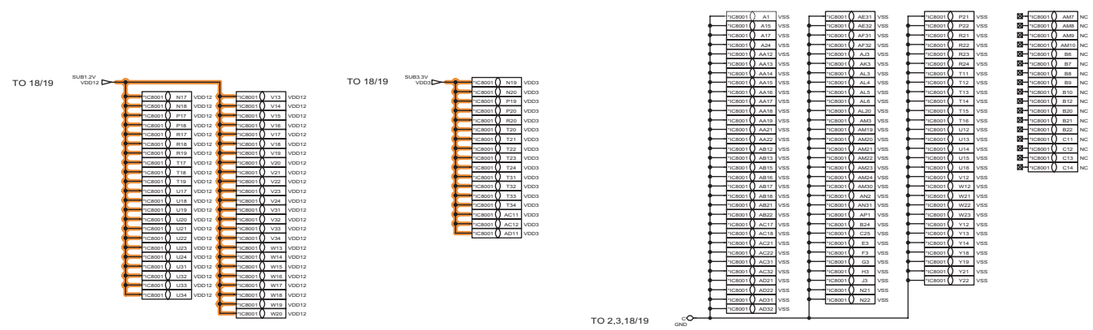

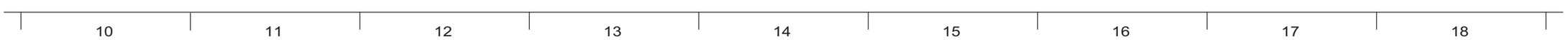

12.7. A-Board (3/19) Schematic Diagram

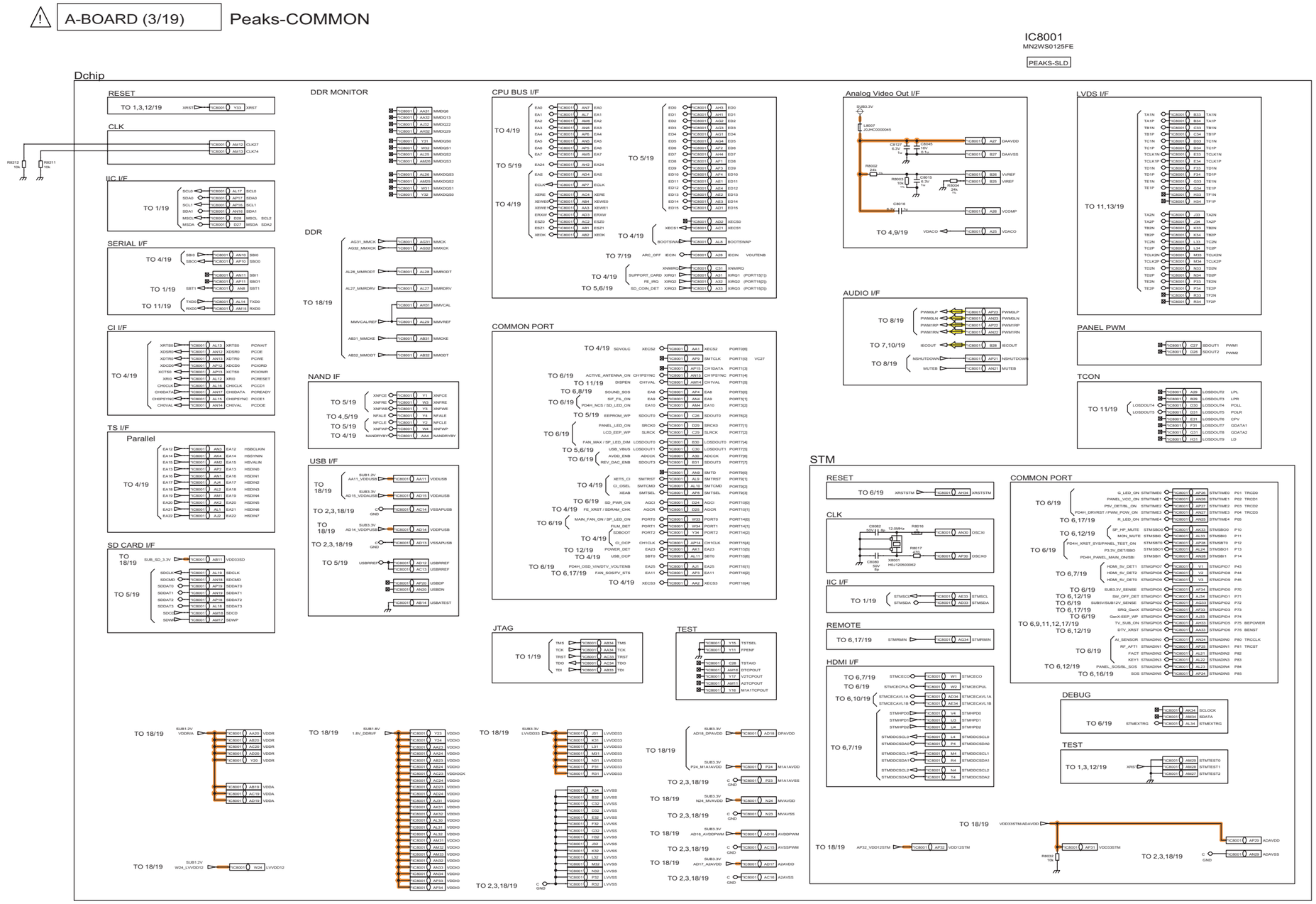

12.8. A-Board (4/19) Schematic Diagram

A-BOARD (4/19) Peaks-DEST

8730-8799

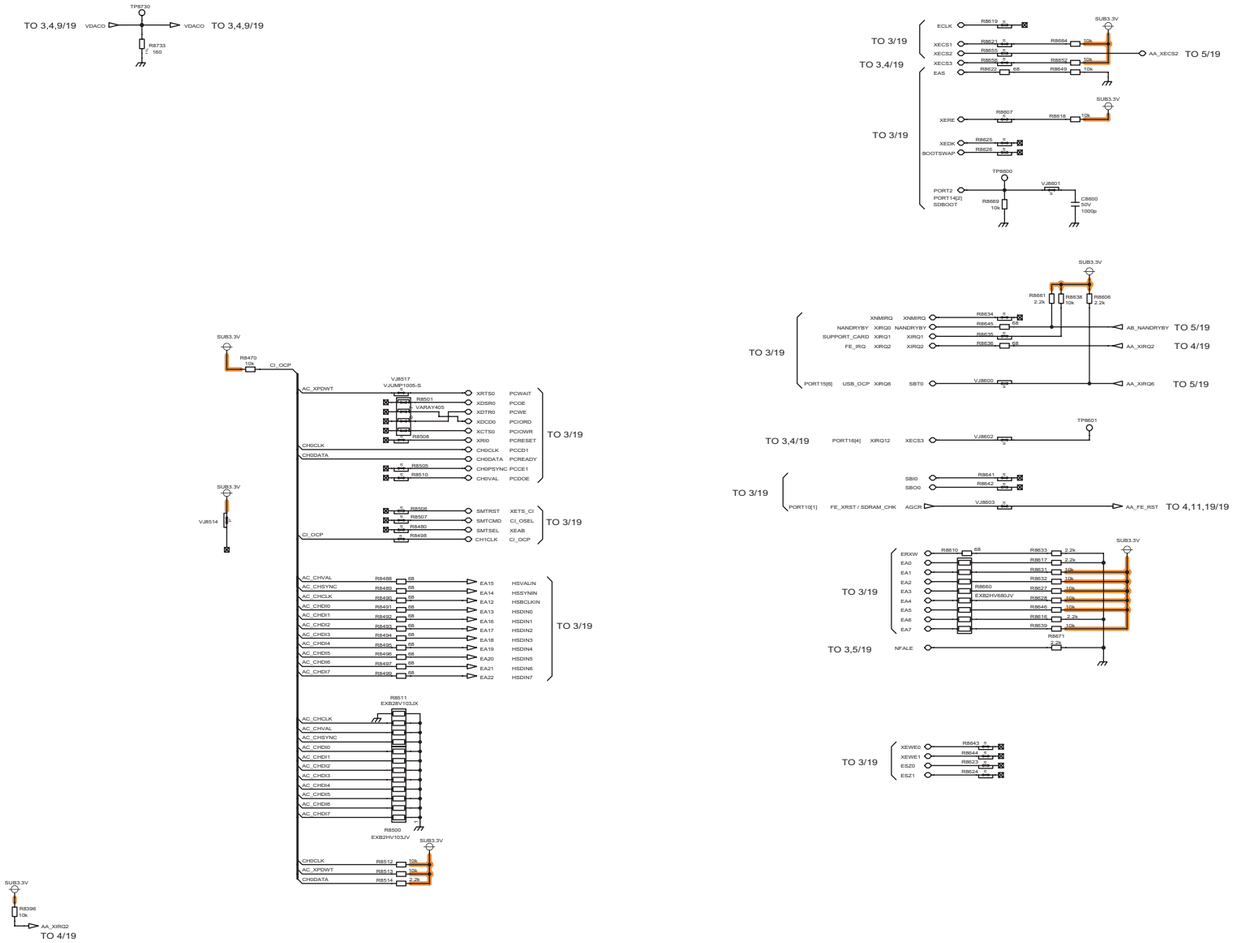

12.9. A-Board (5/19) Schematic Diagram

A-BOARD (5/19) Peaks-MODEL

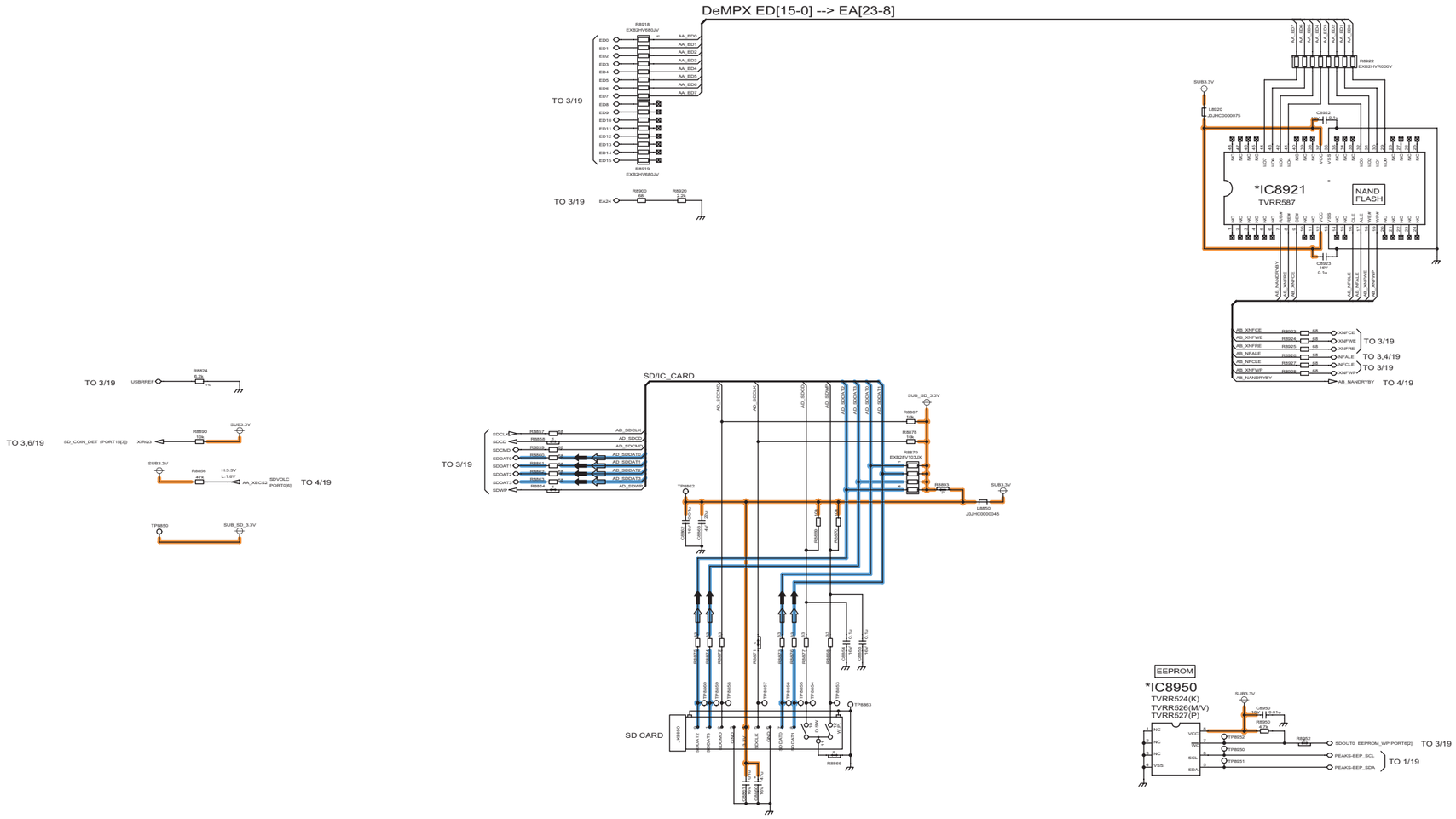

37 38 39 40 41 42 43 44 45

12.10. A-Board (6/19) Schematic Diagram

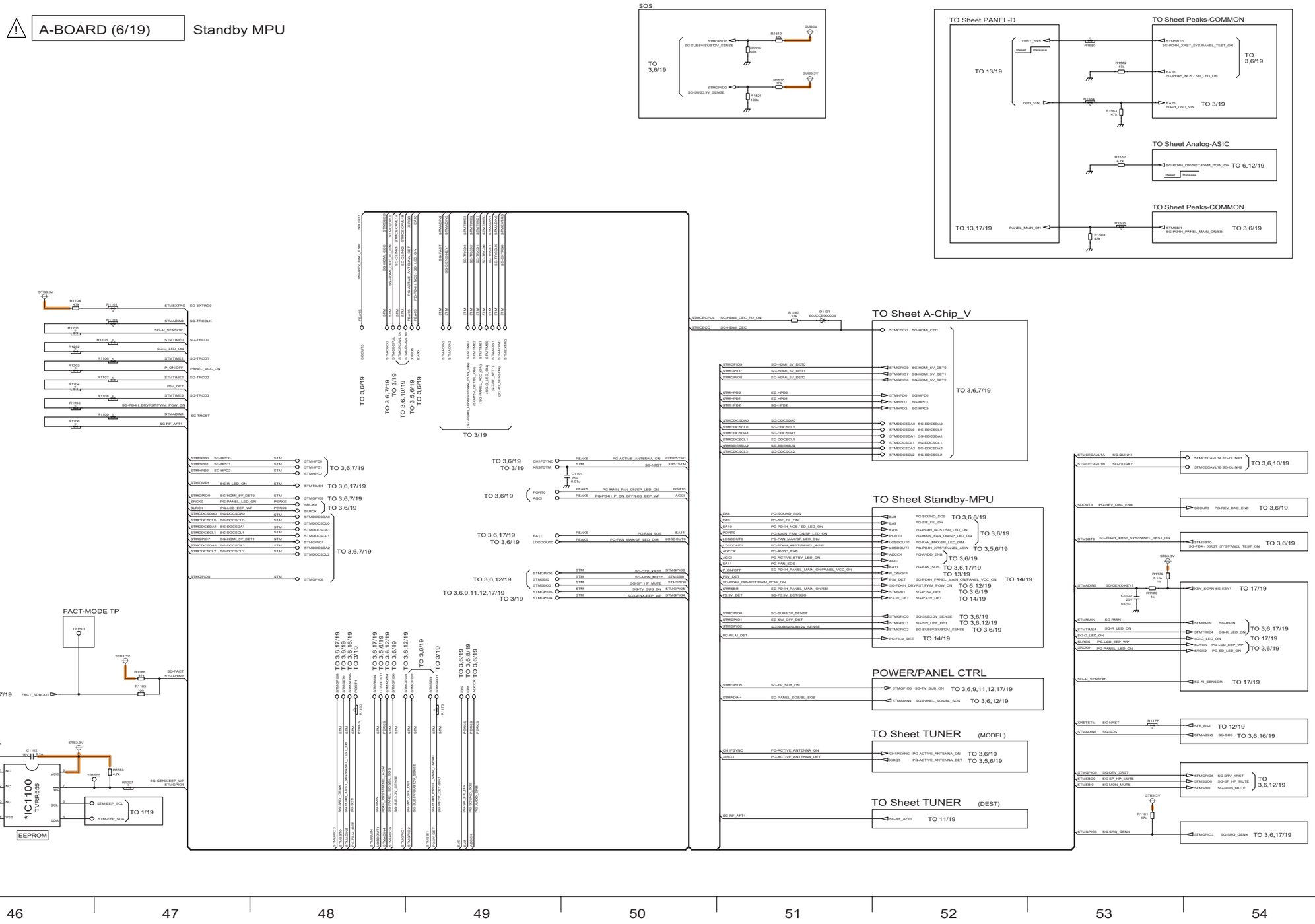

12.11. A-Board (7/19) Schematic Diagram

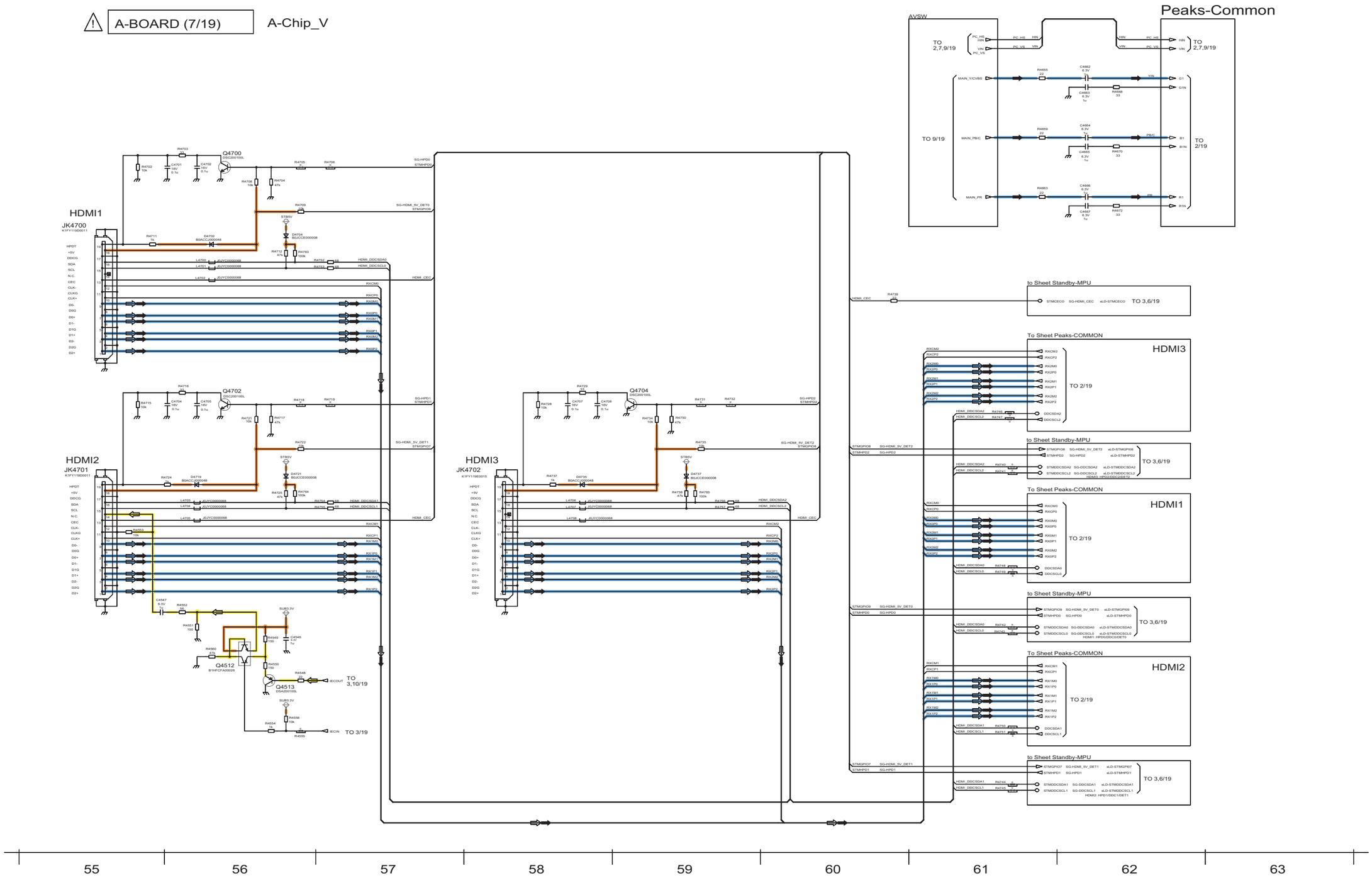

12.12. A-Board (8/19) Schematic Diagram

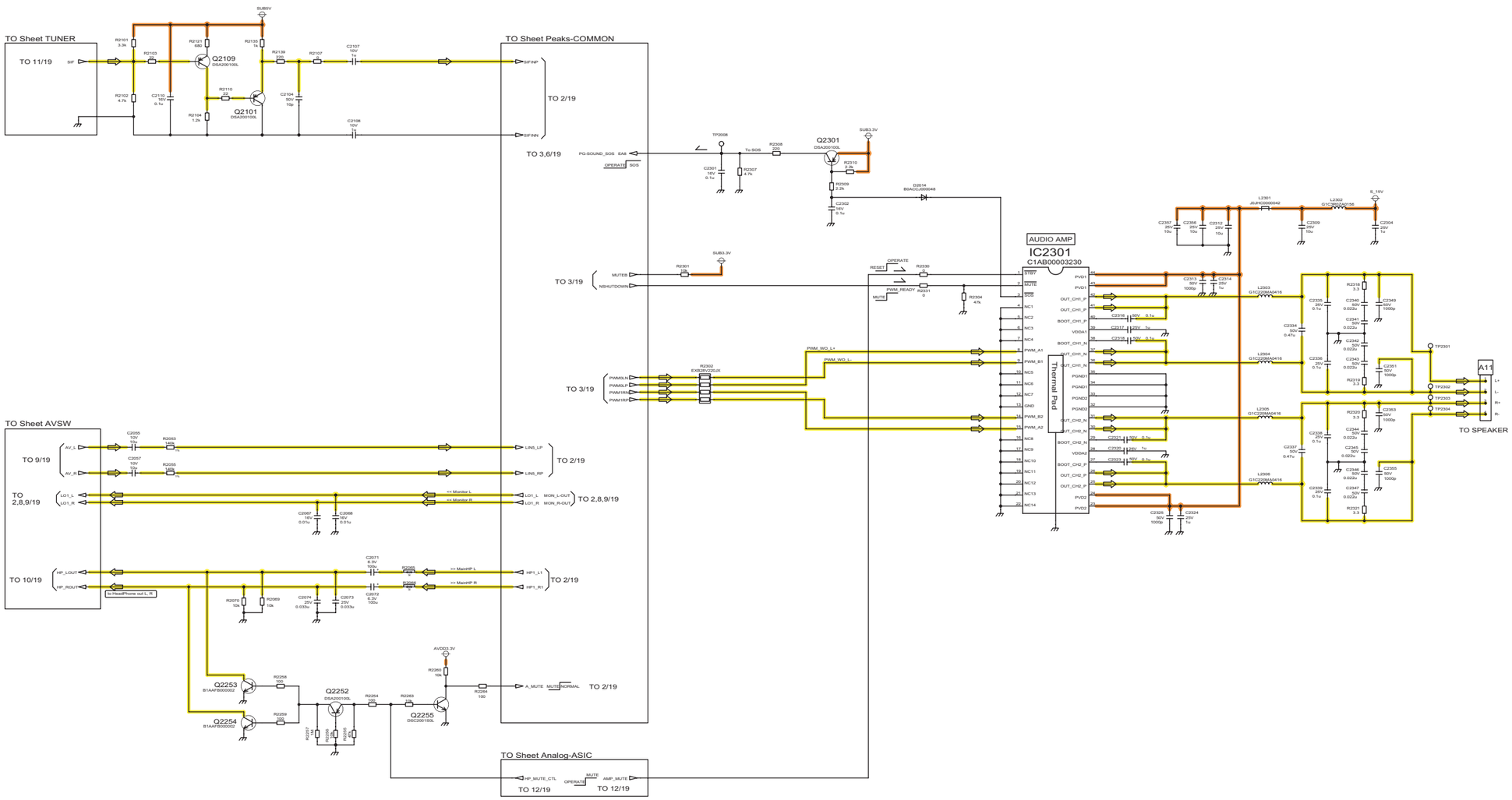

12.13. A-Board (9/19) Schematic Diagram

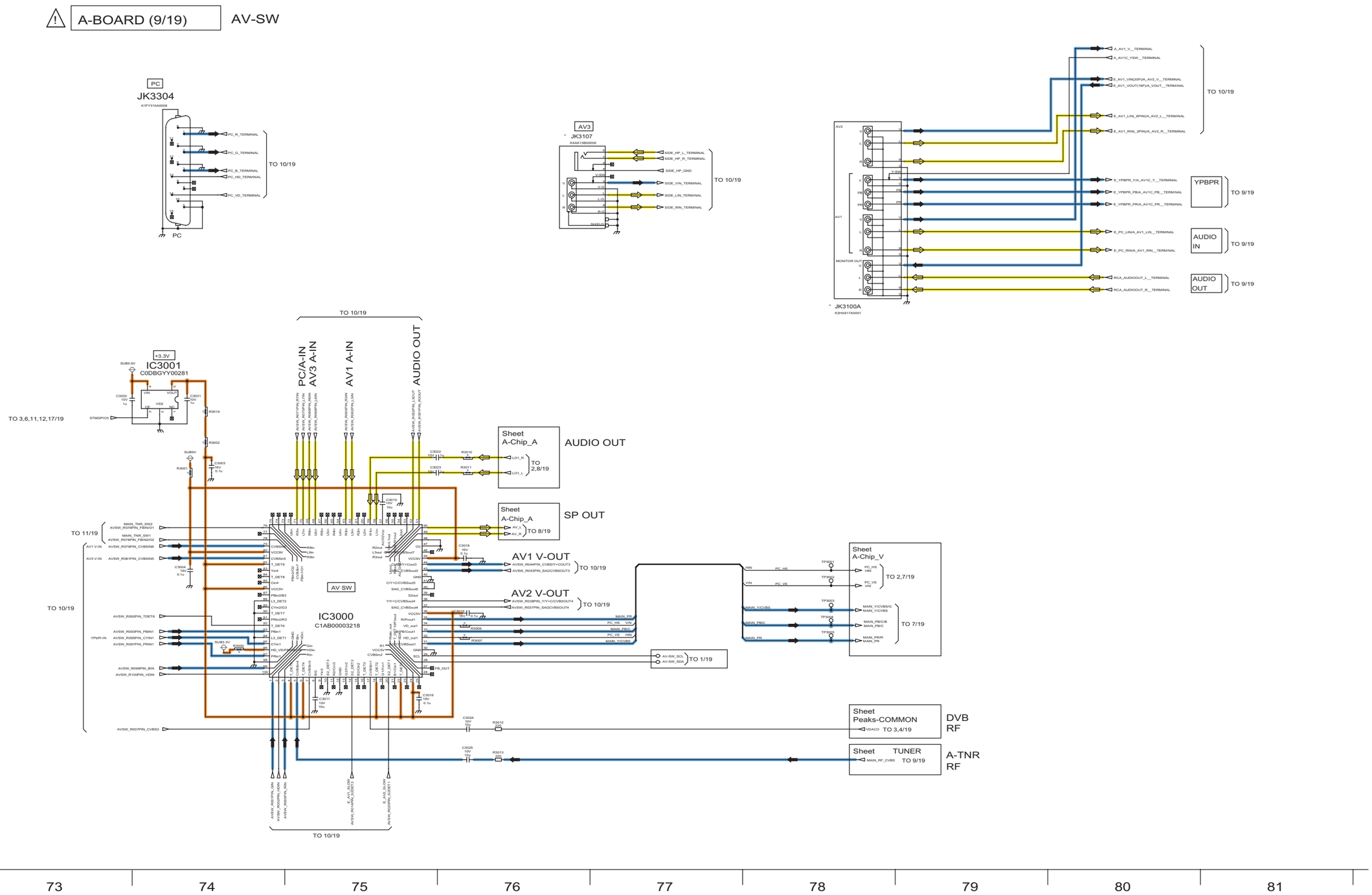

12.14. A-Board (10/19) Schematic Diagram

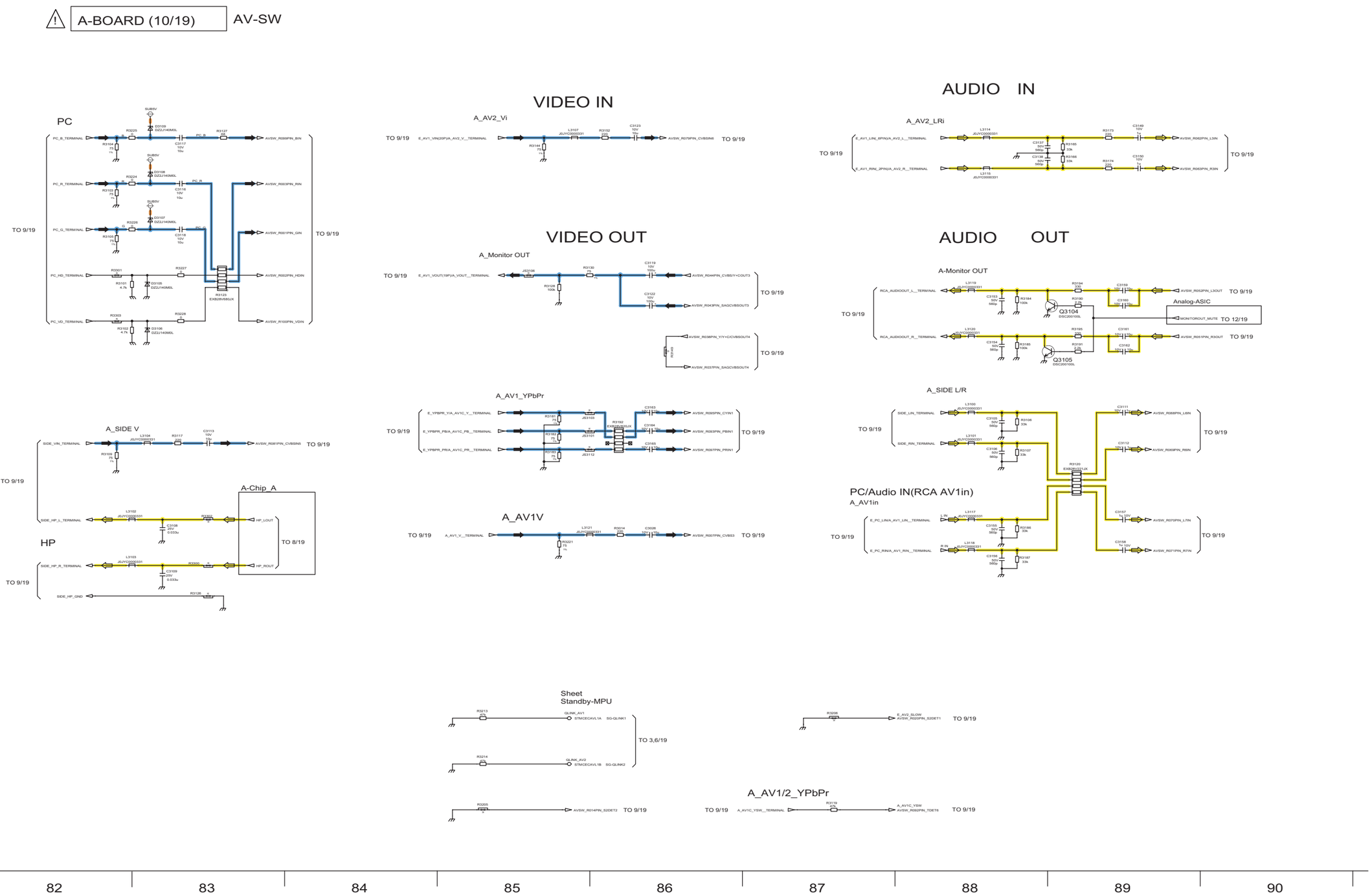

12.15. A-Board (11/19) Schematic Diagram

A-BOARD (11/19) TUNER

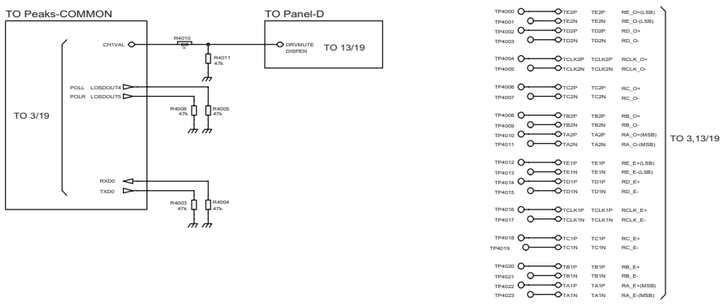

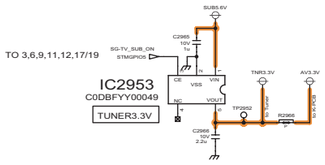

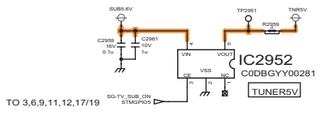

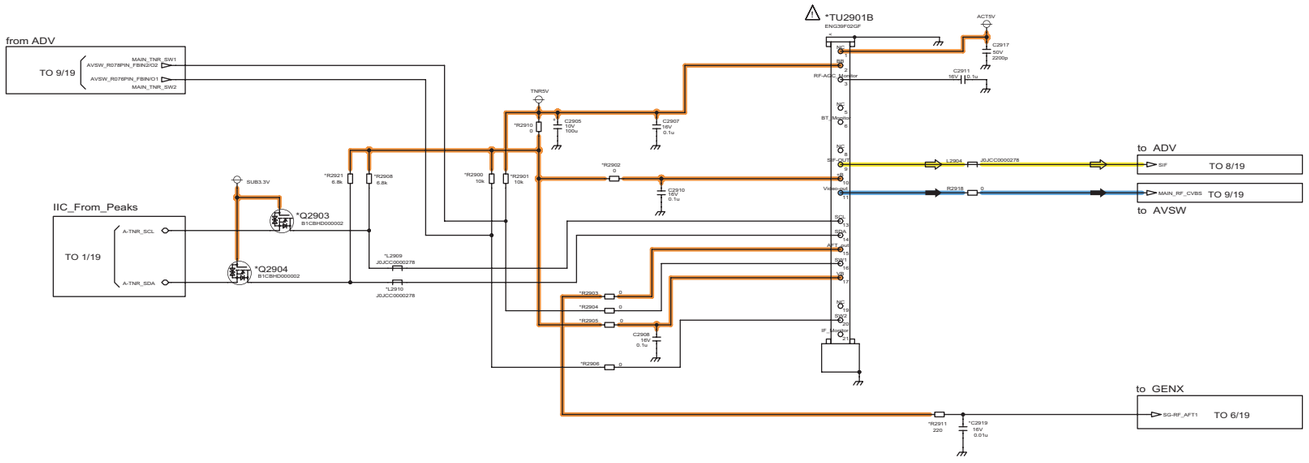

91 92 93 94 95 96 97 98 99

12.16. A-Board (12/19) Schematic Diagram

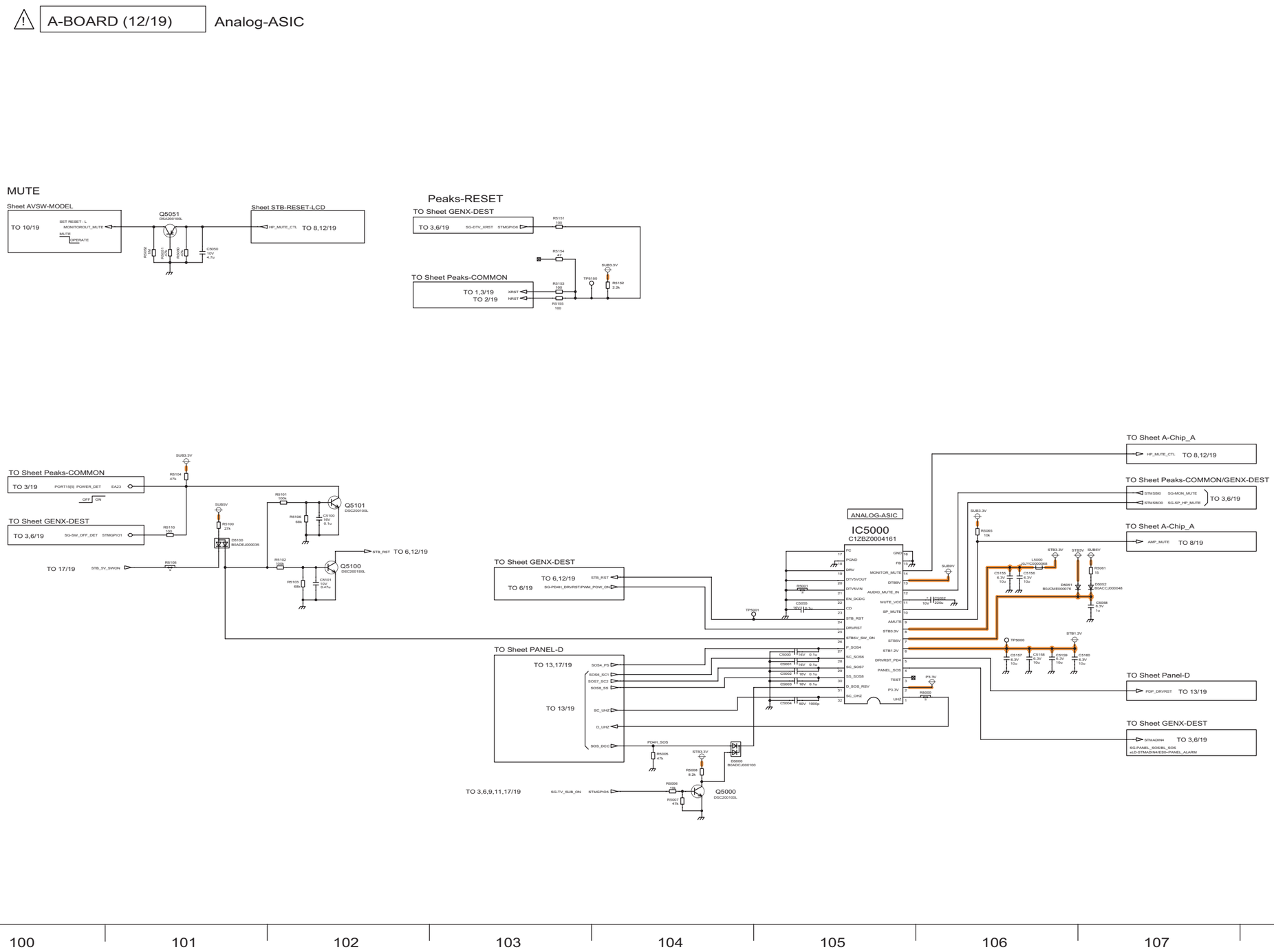

12.17. A-Board (13/19) Schematic Diagram

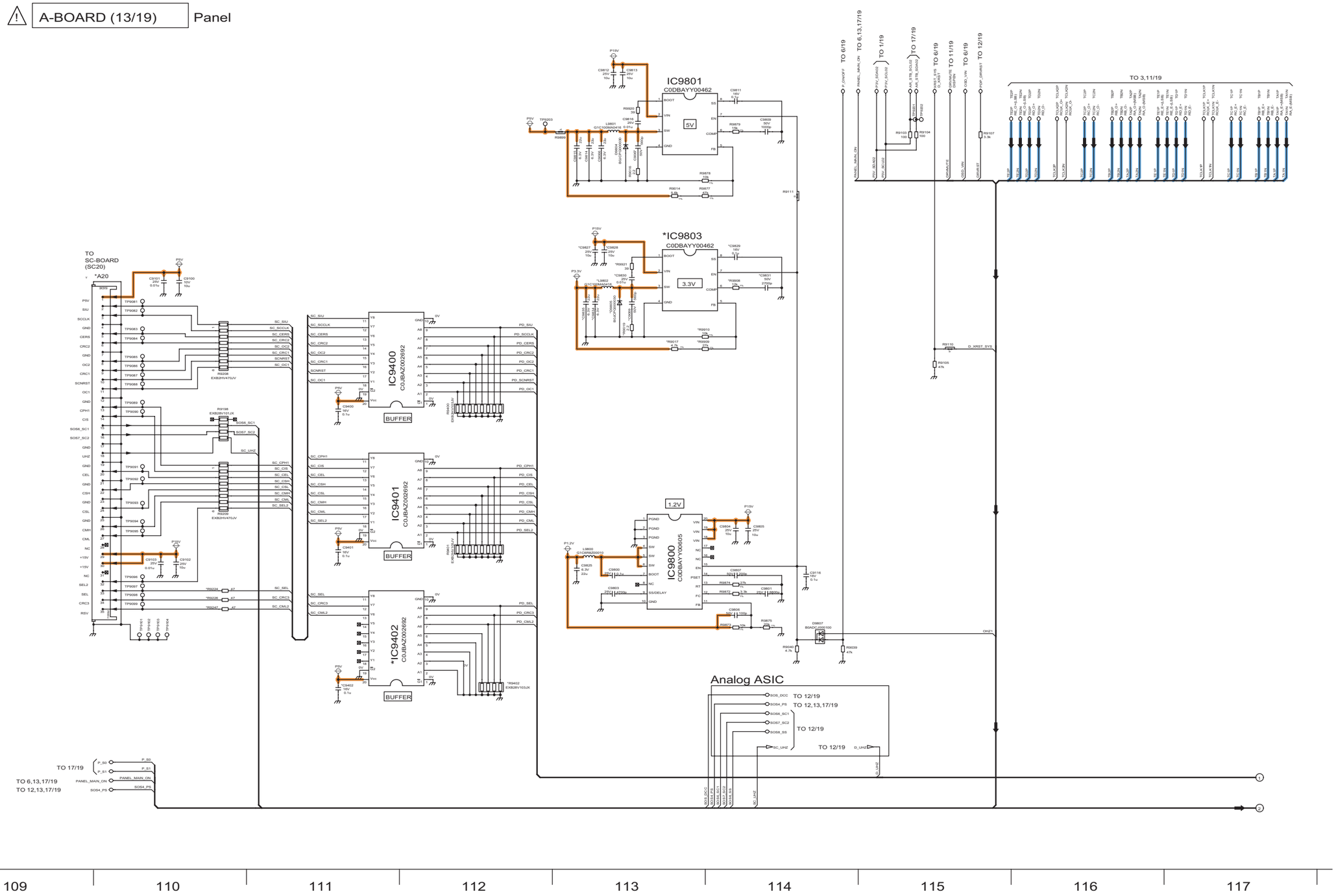

12.18. A-Board (14/19) Schematic Diagram

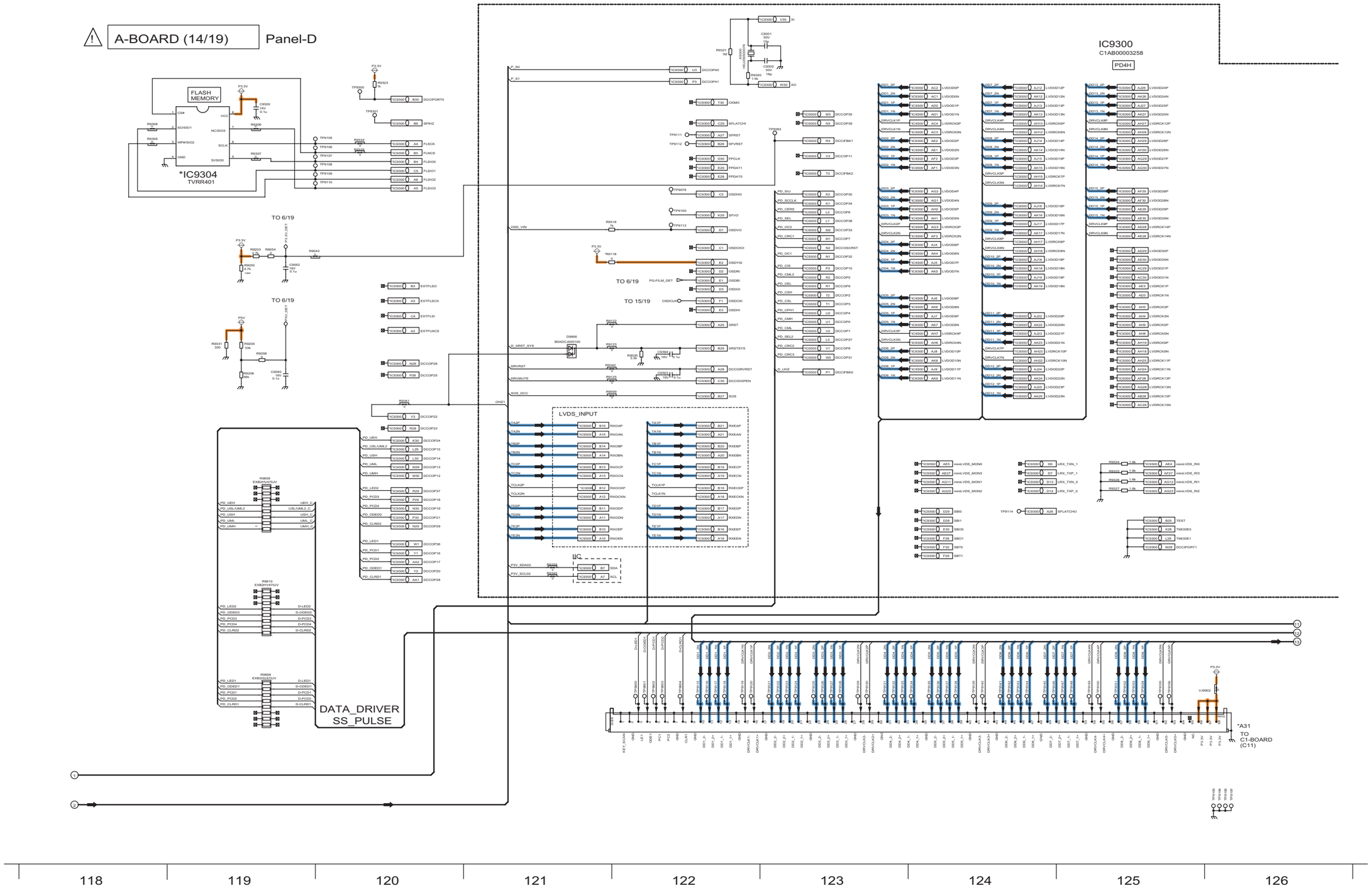

12.19. A-Board (15/19) Schematic Diagram

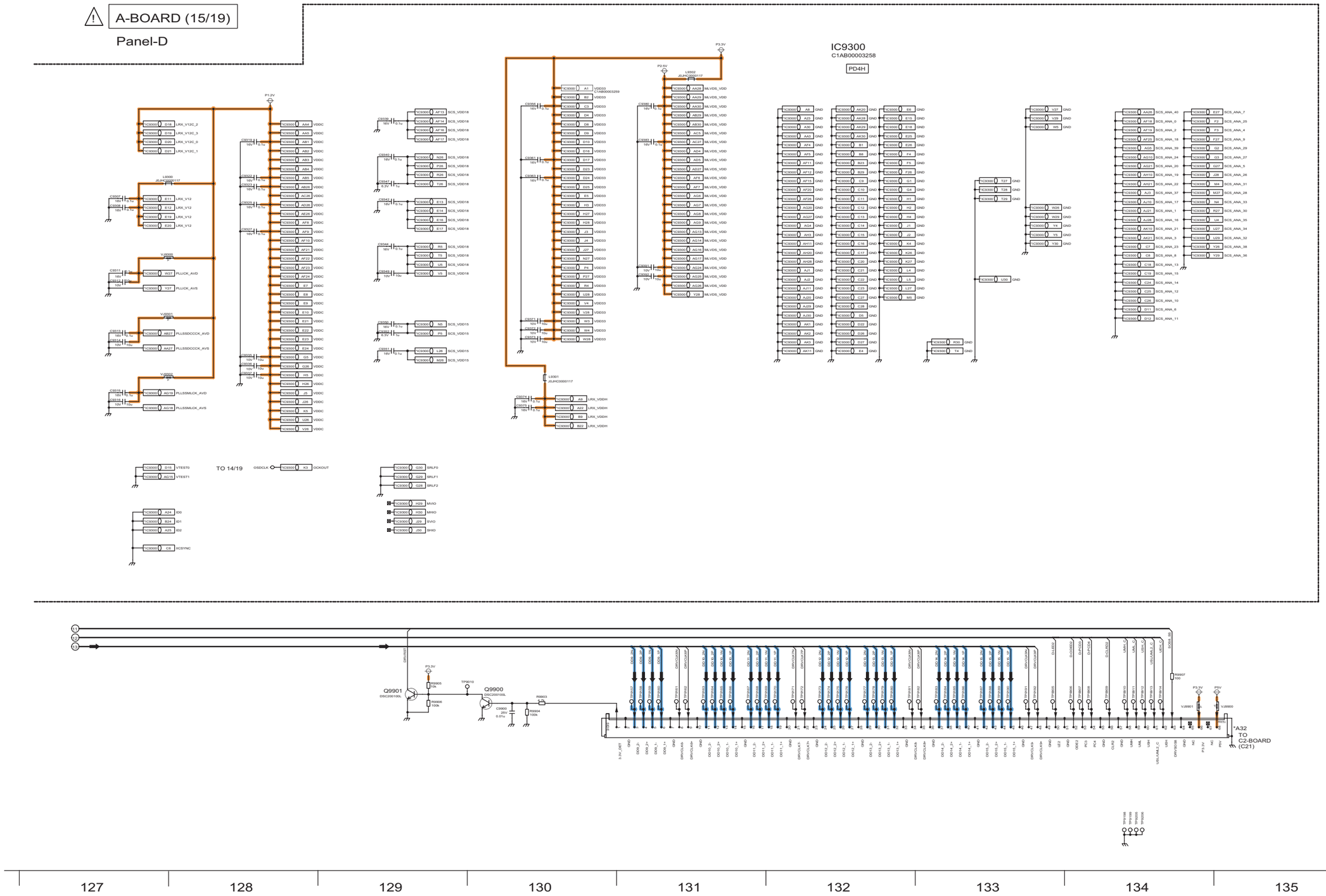

12.20. A-Board (16/19) Schematic Diagram

A-BOARD (16/19) POWER

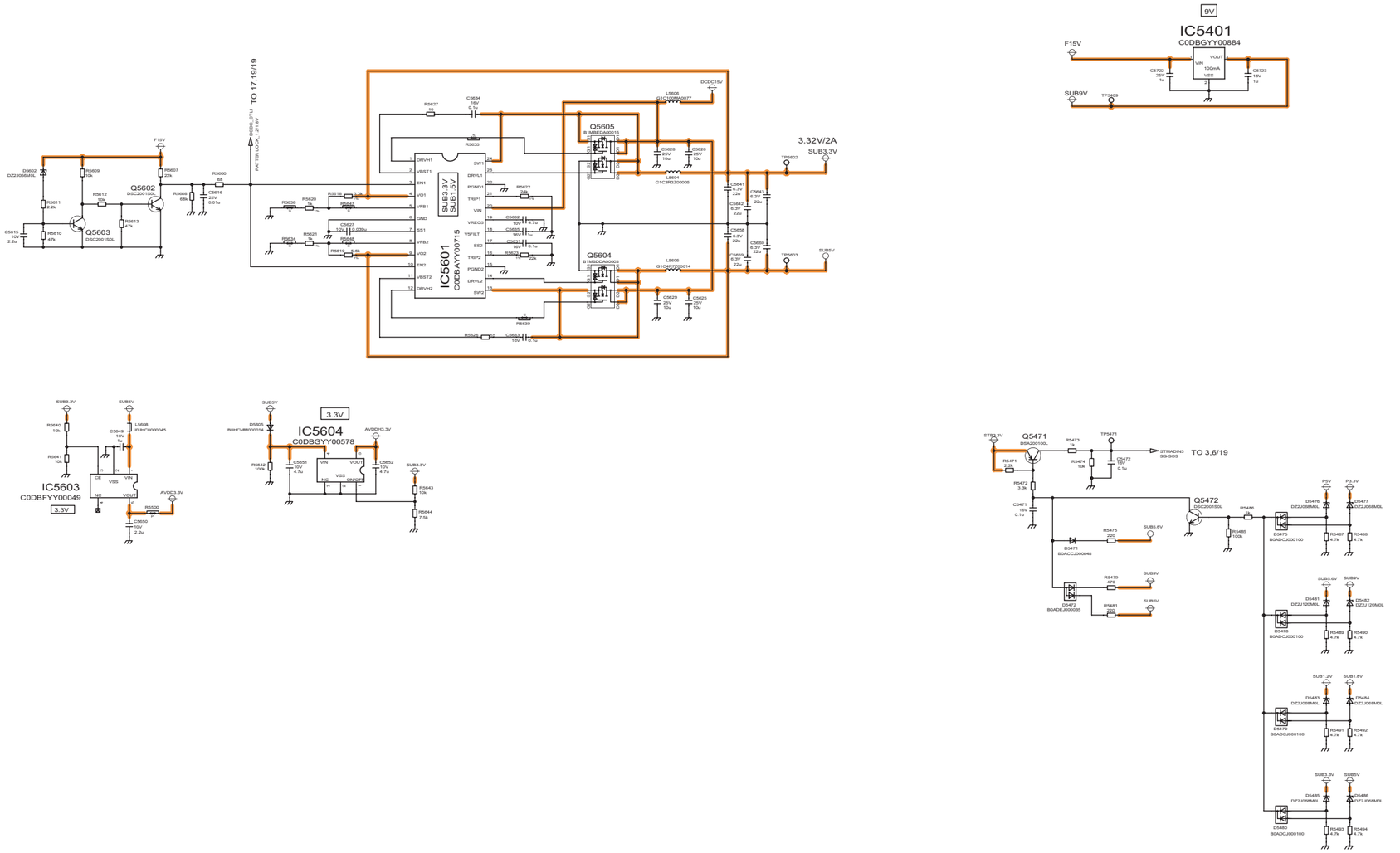

12.21. A-Board (17/19) Schematic Diagram

⚠ A-BOARD (17/19) SET

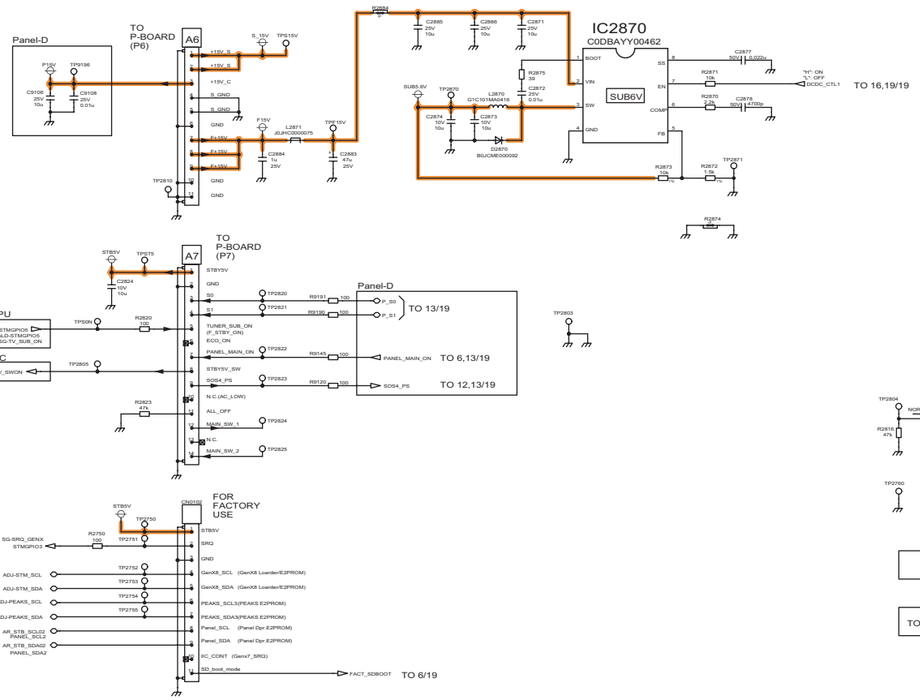

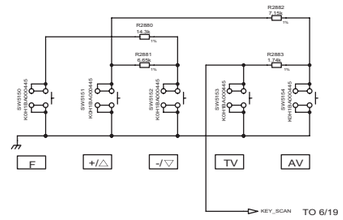

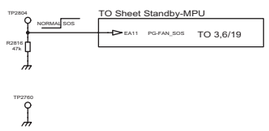

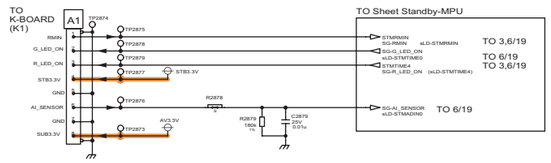

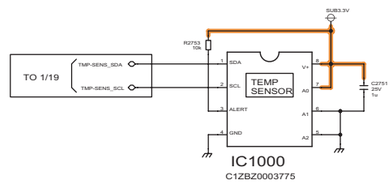

145 146 147 148 149 150 151 152 153

12.22. A-Board (18/19) Schematic Diagram

A-BOARD (18/19)

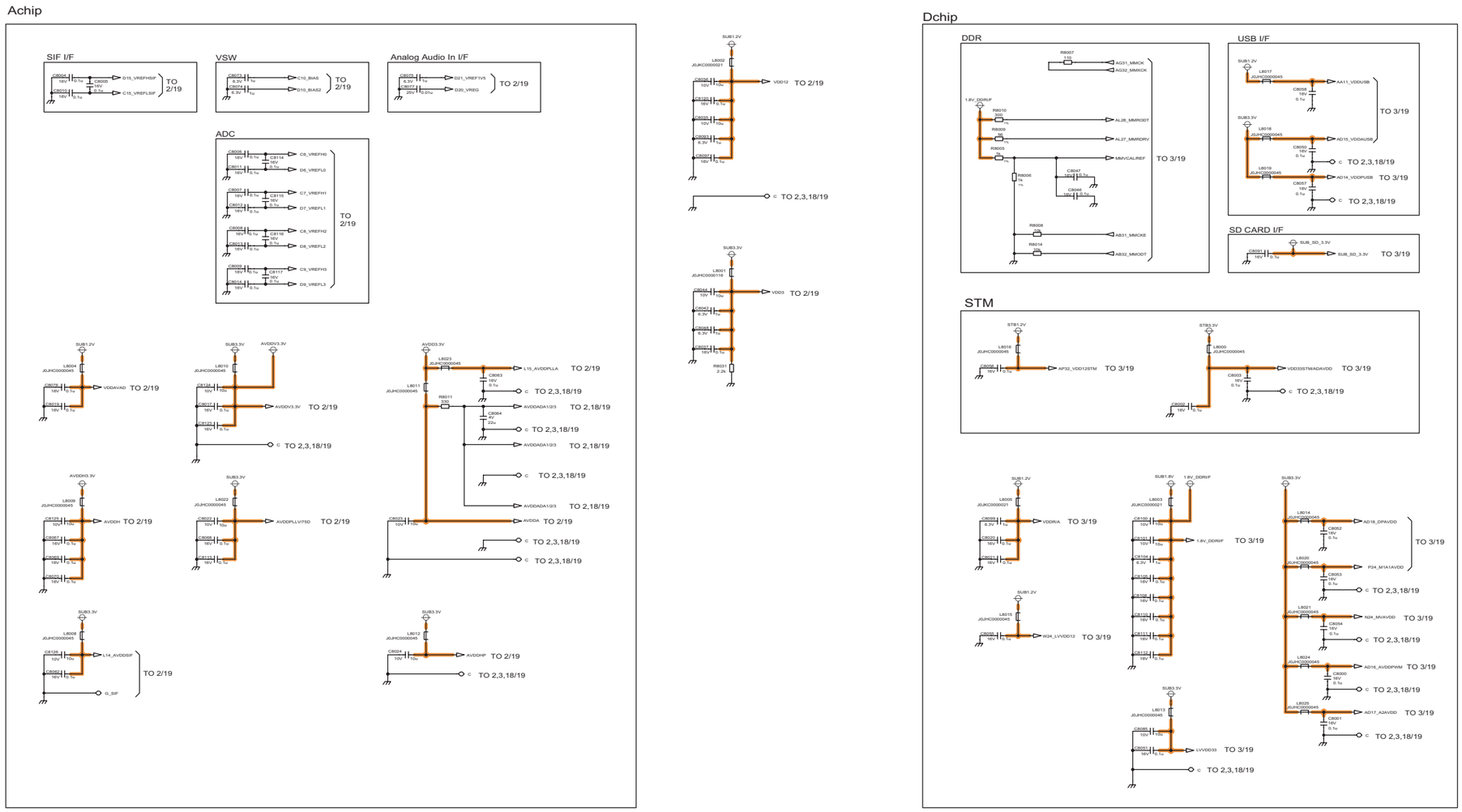

12.23. A-Board (19/19) Schematic Diagram

A-BOARD (19/19)

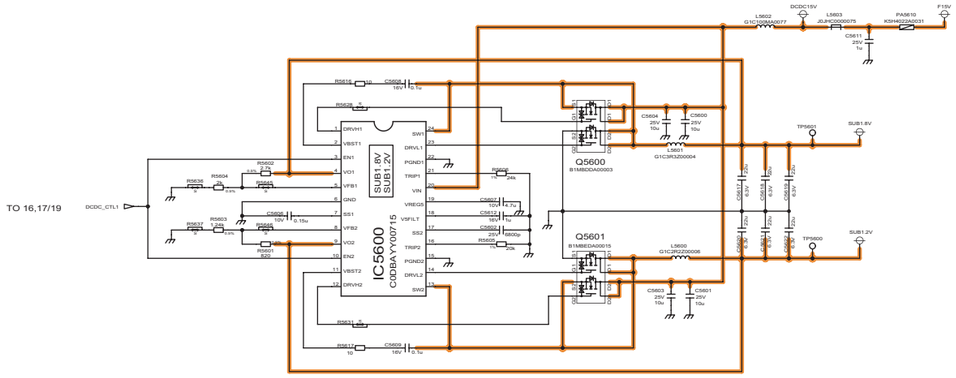

163 164 165 166 167 168 169 170 171

12.24. K-Board and S-Board Schematic Diagram

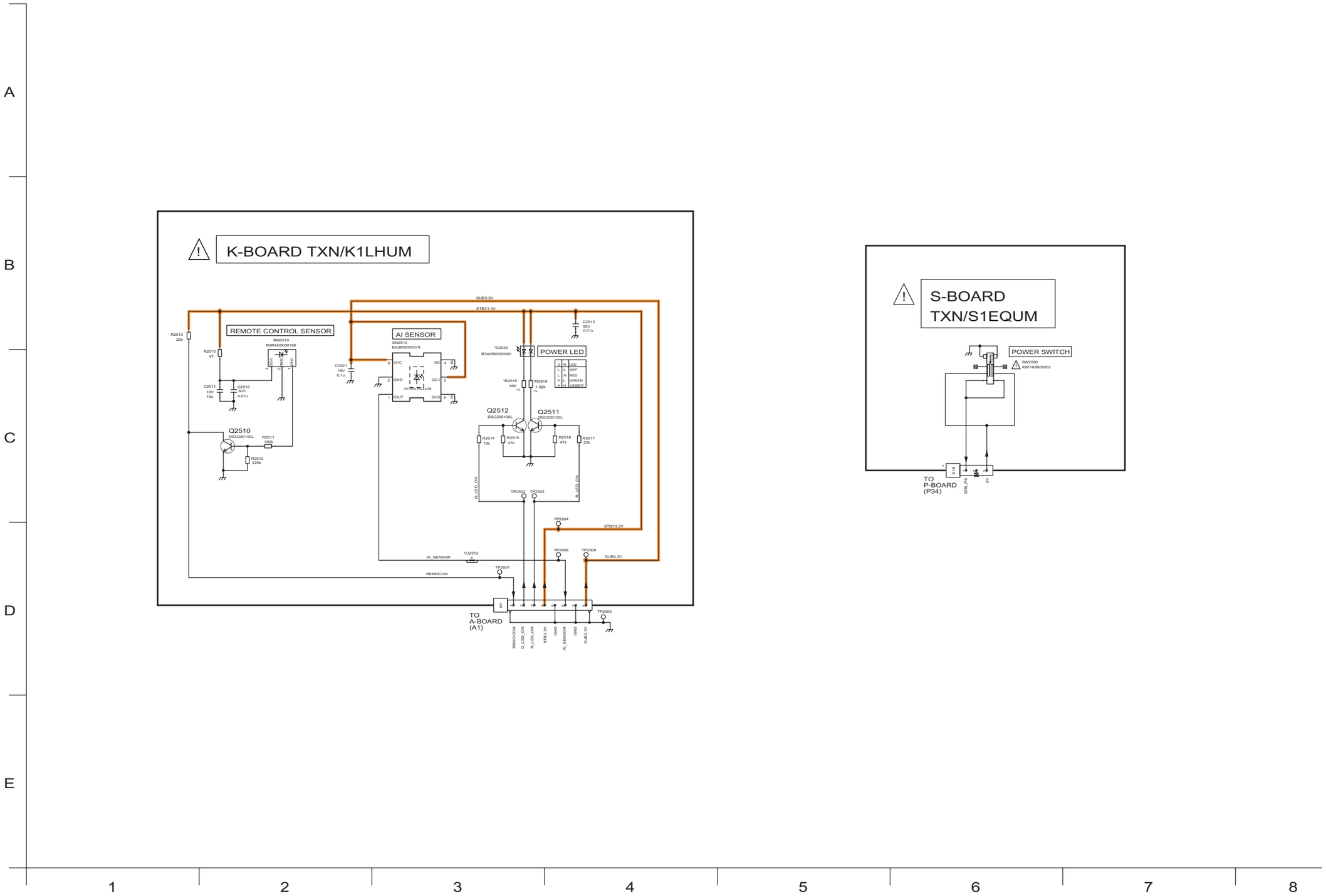

12.25. C1-Board (1/2) Schematic Diagram

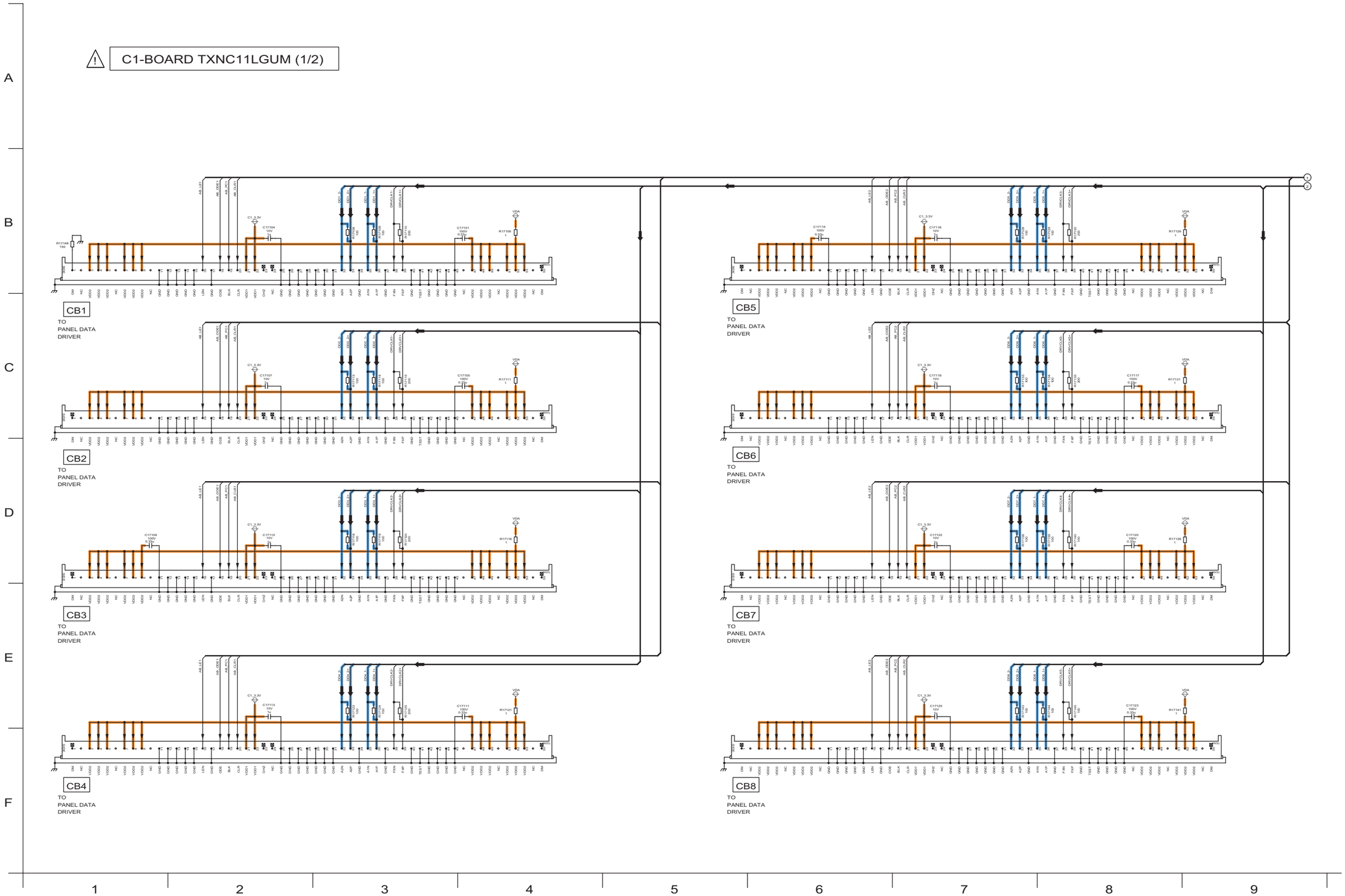

12.26. C1-Board (2/2) Schematic Diagram

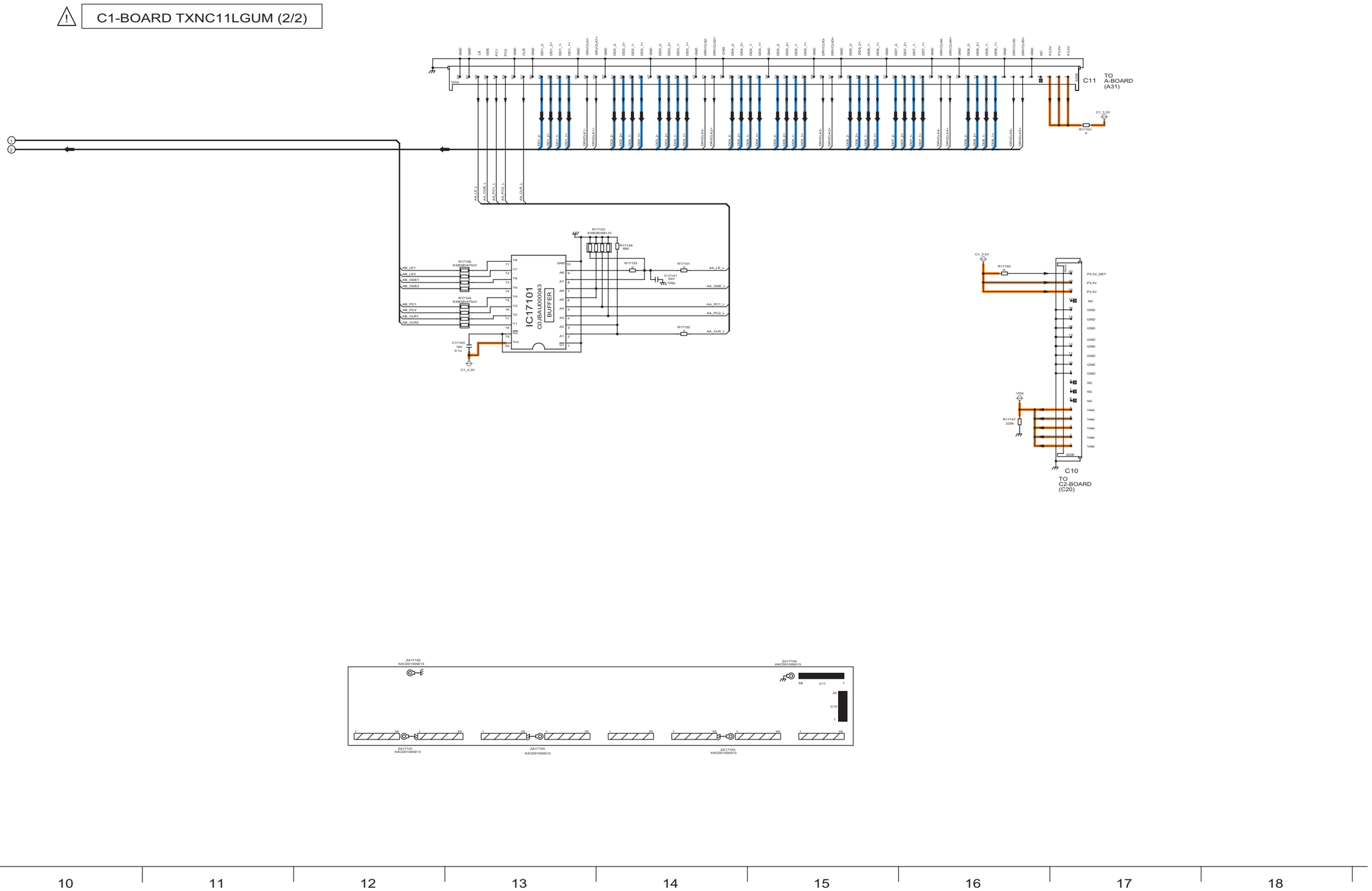

12.27. C2-Board (1/2) Schematic Diagram

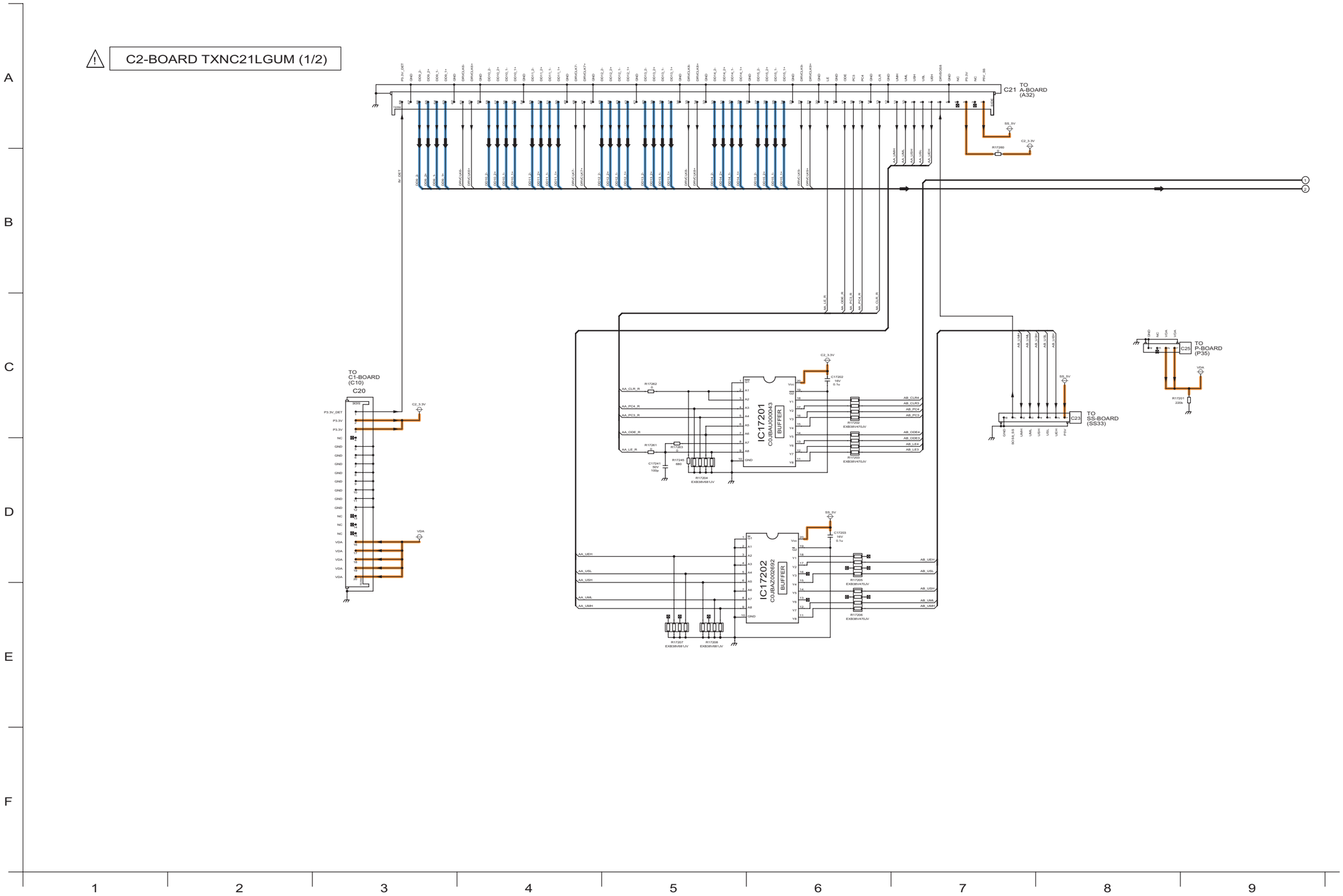

12.28. C2-Board (2/2) Schematic Diagram

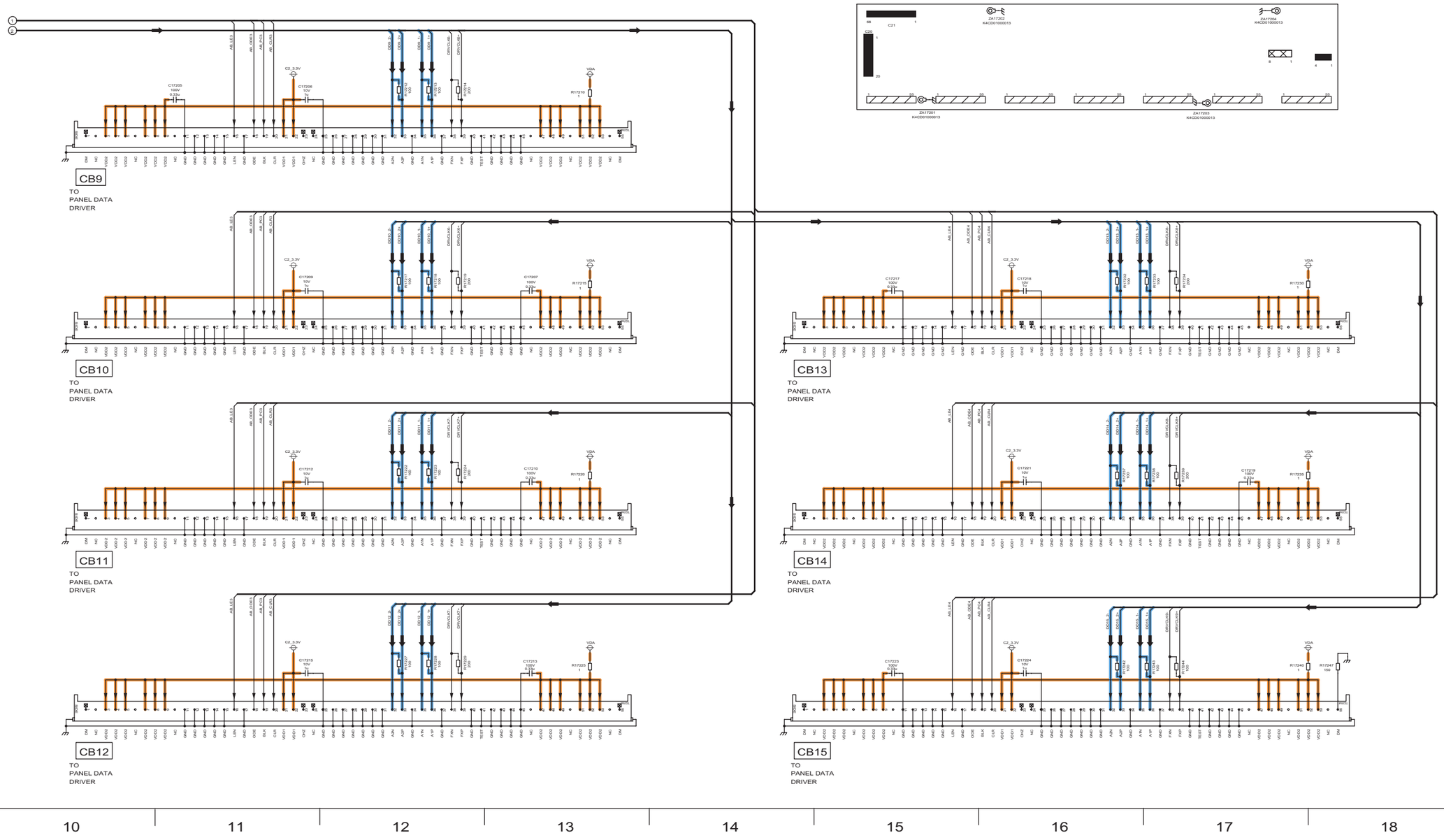

12.29. SC-Board (1/4) Schematic Diagram

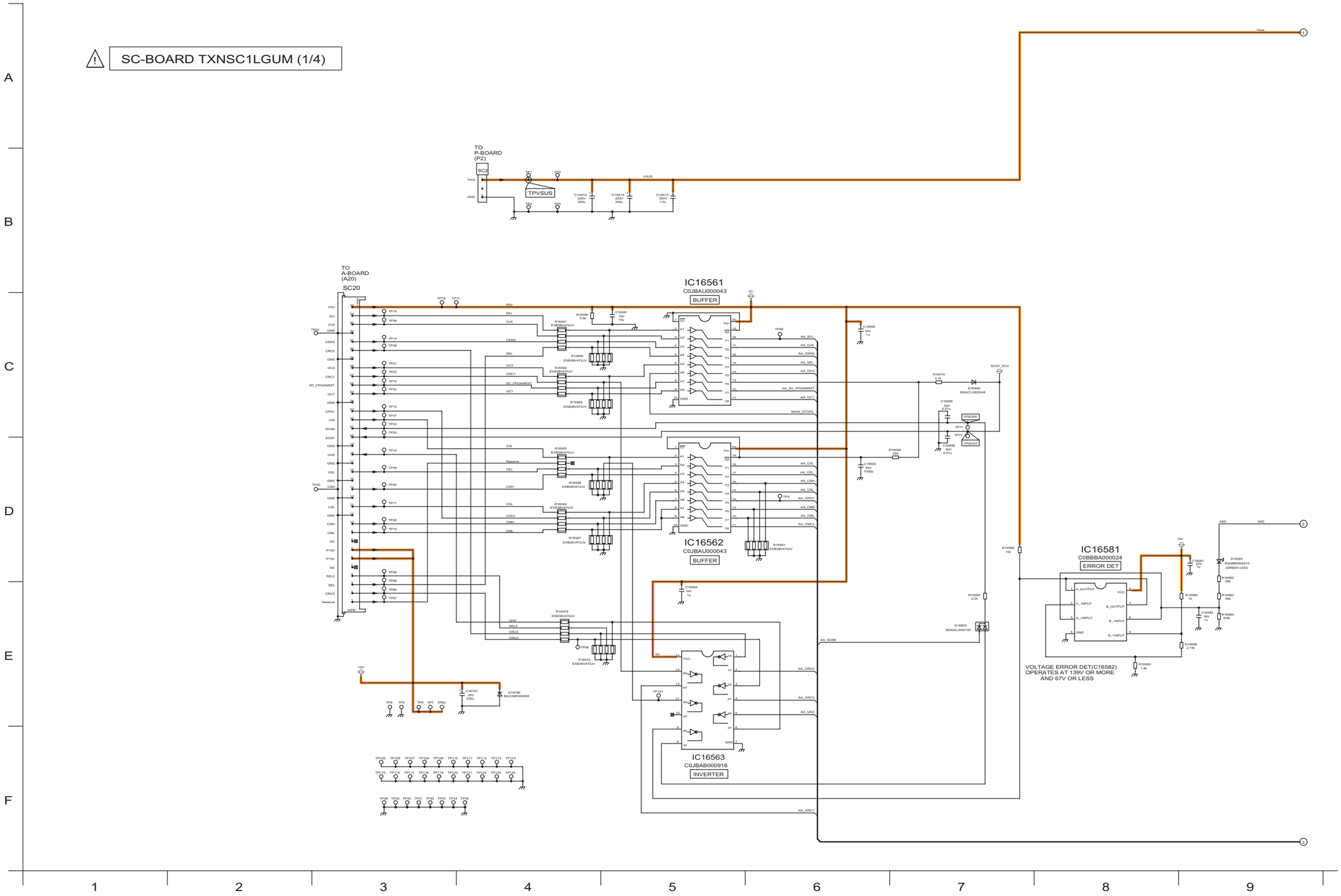

12.30. SC-Board (2/4) Schematic Diagram

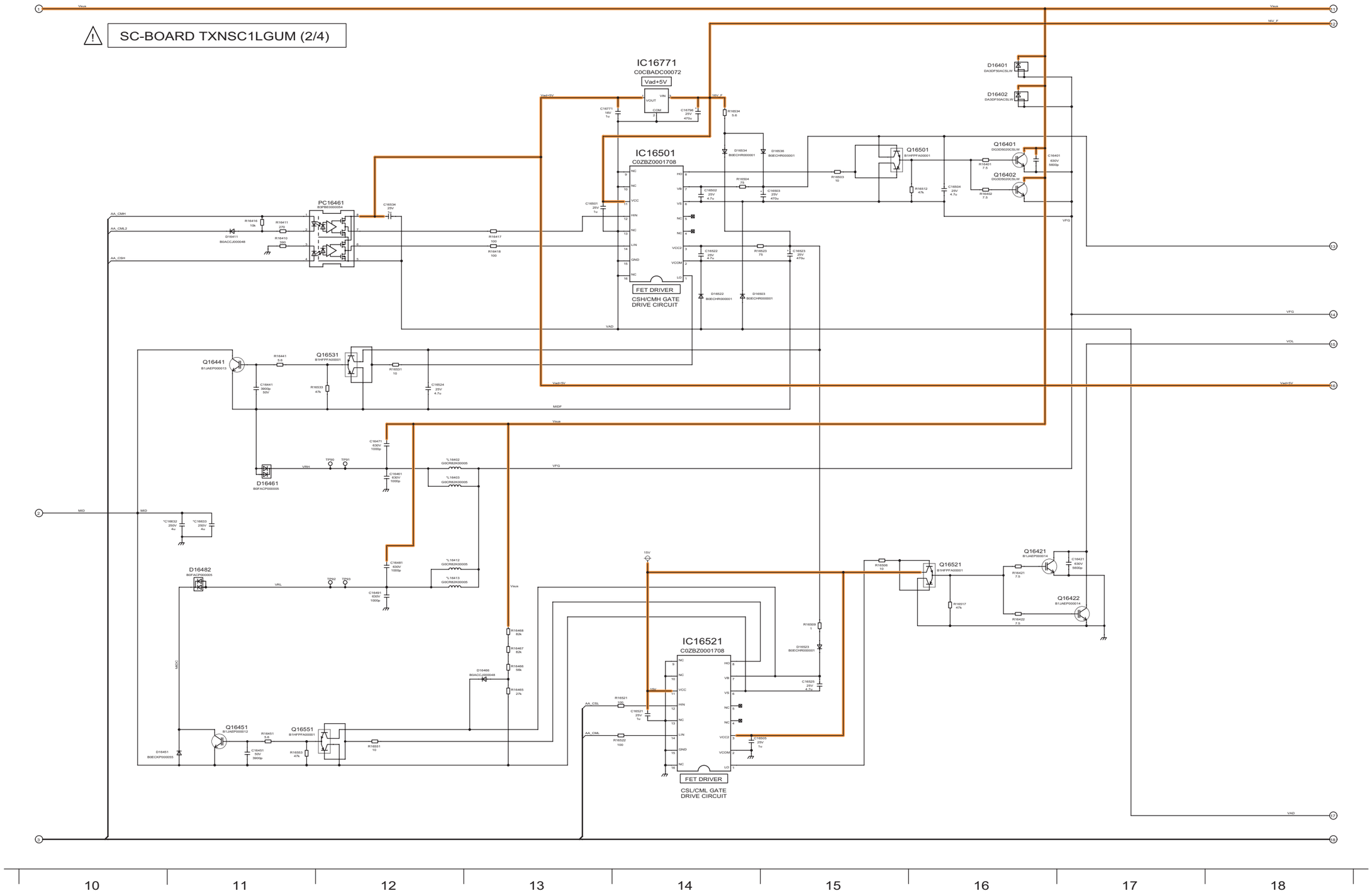

12.31. SC-Board (3/4) Schematic Diagram

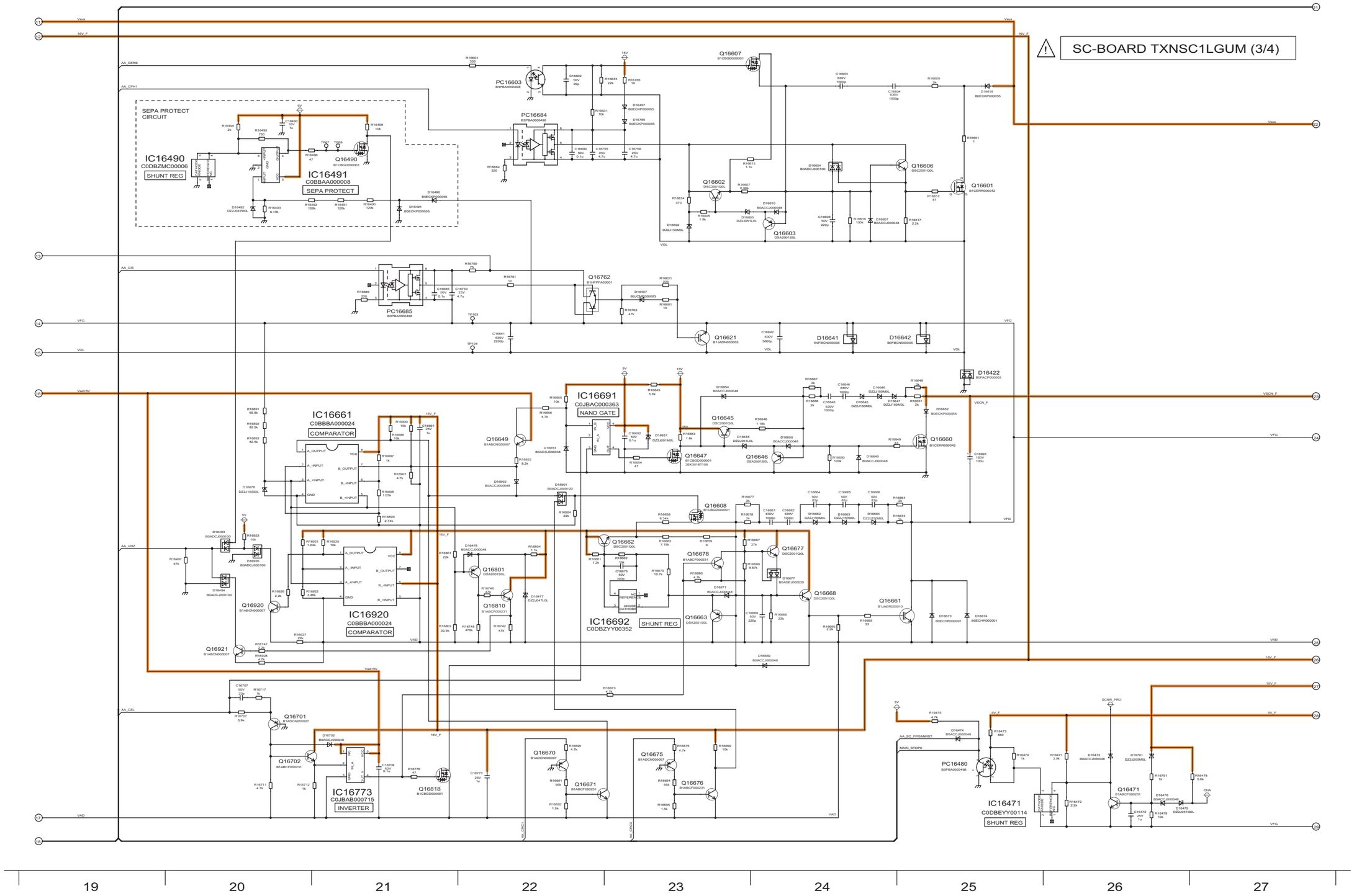

12.32. SC-Board (4/4) Schematic Diagram

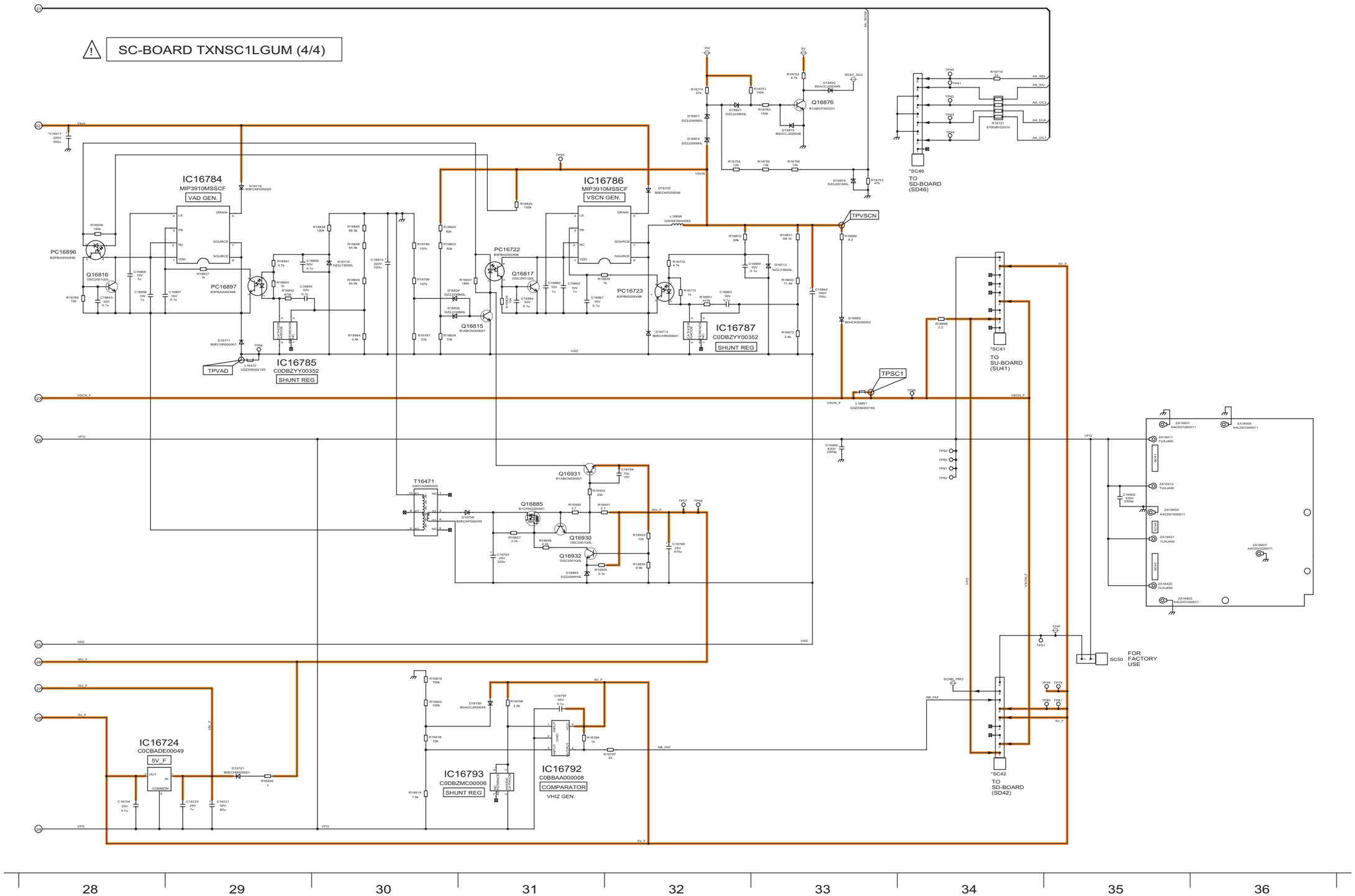

12.33. SS-Board (1/2) Schematic Diagram

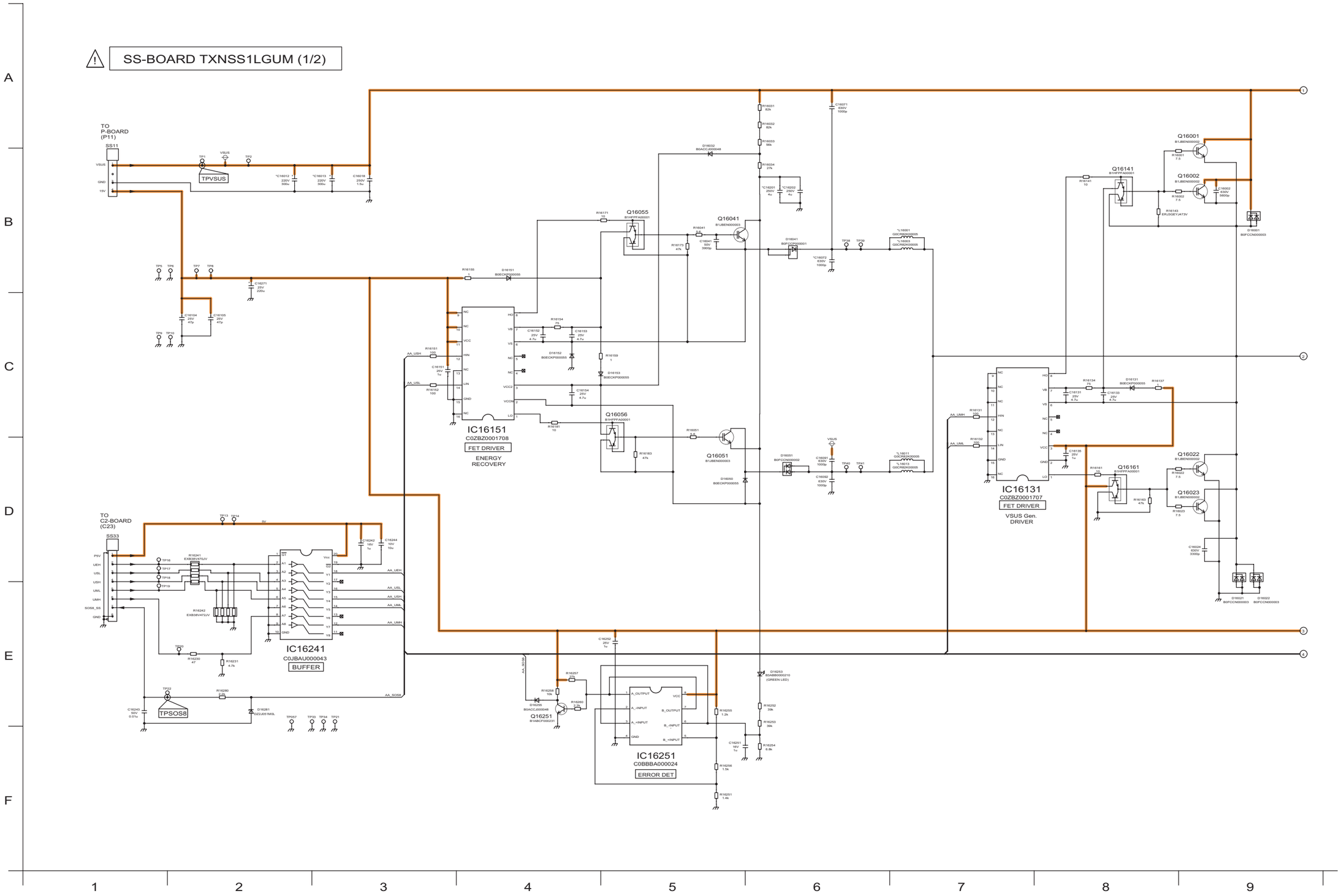

12.34. SS-Board (2/2) and SS2-Board Schematic Diagram

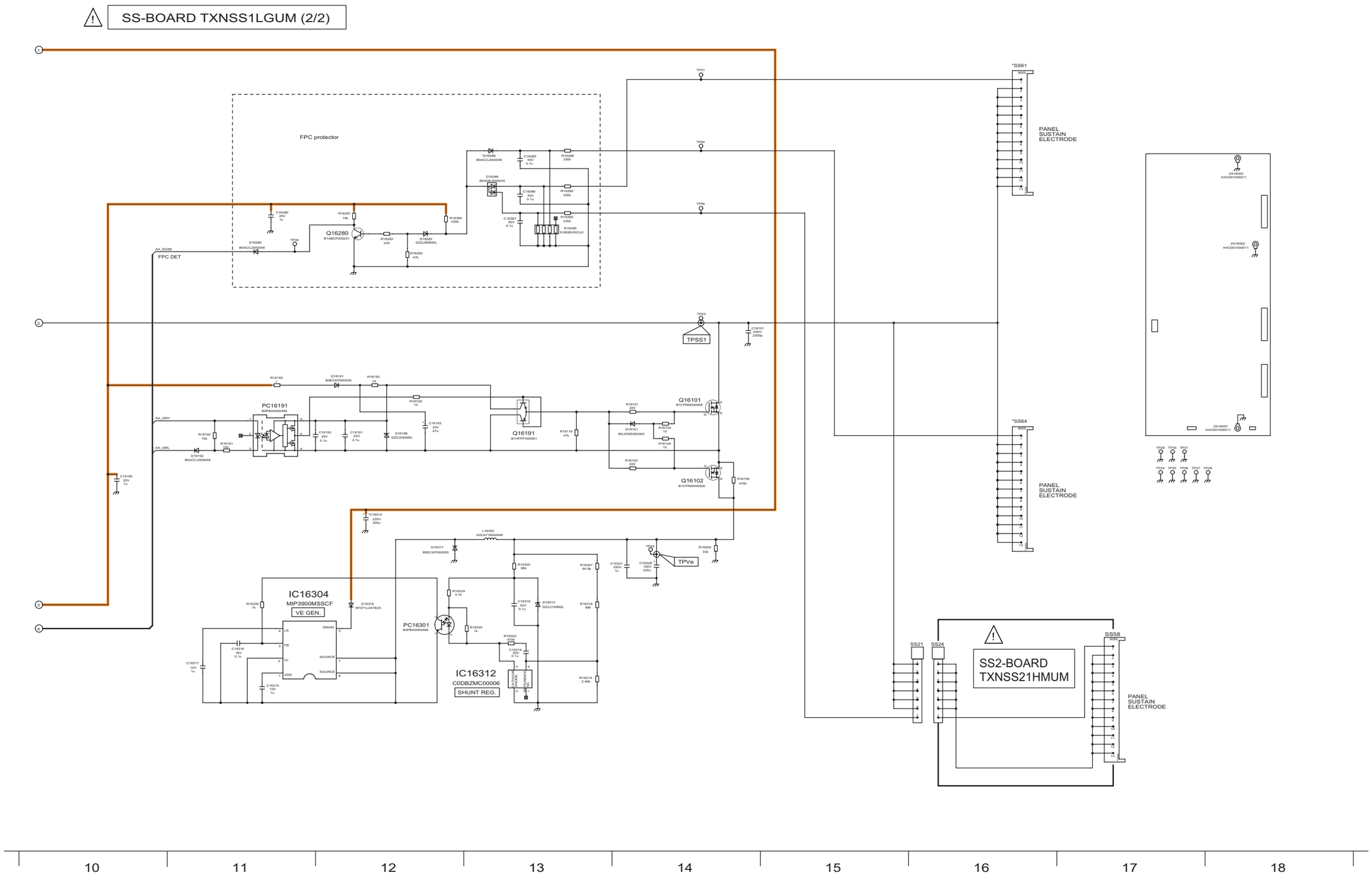

13 Printed Circuit Board

13.1. P-Board

P-BOARD (FOIL SIDE)
ETX2MM805MEH

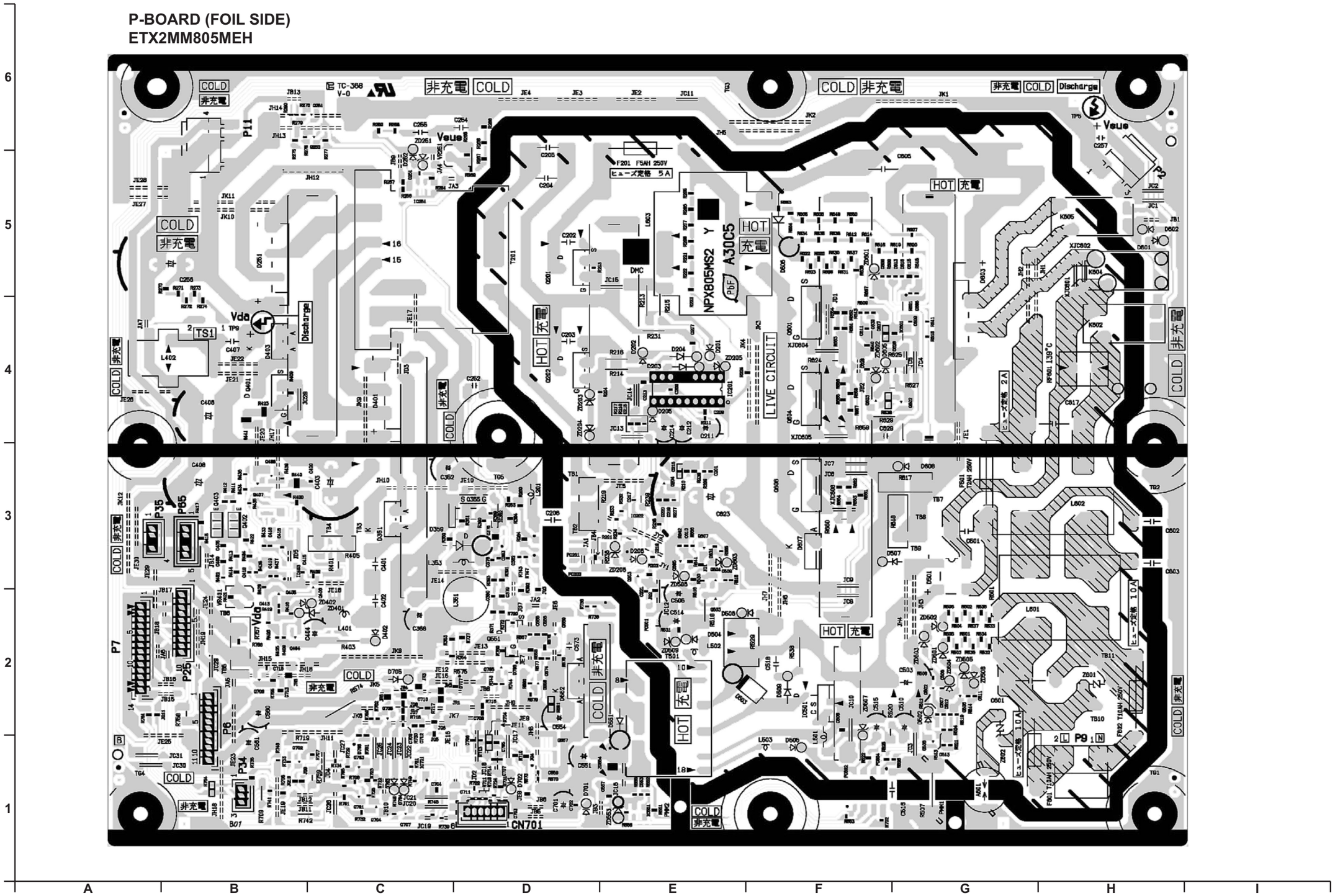

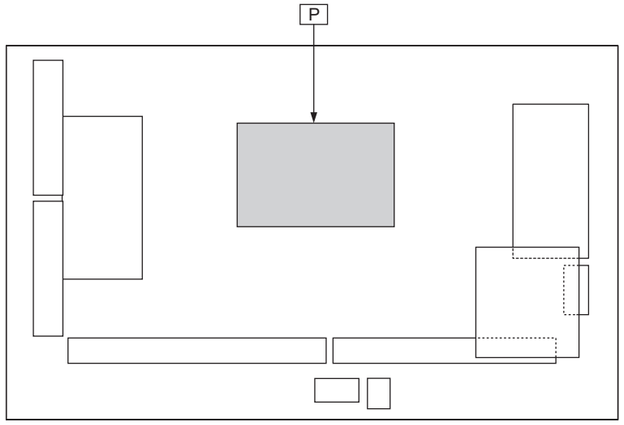

Parts Location

P-BOARD (FOIL SIDE)

IC		TRANSISTOR			
IC201	E-4	Q201	D-5	Q601	F-4
IC202	E-3	Q202	D-4	Q602	G-4
IC251	C-5	Q203	E-3	Q603	F-4
IC352	D-3	Q204	E-3	Q604	F-4
IC403	B-3	Q251	C-6	Q605	E-3
IC501	F-2	Q252	C-6	Q606	F-3
IC551	E-1	Q355	D-3	Q607	E-3
IC601	G-4	Q401	B-4	Q701	C-1
IC701	C-1	Q402	B-3	Q702	B-1
		Q403	B-3	Q703	C-1
		Q404	B-2	Q704	C-1
		Q405	B-2	Q705	D-2
		Q406	C-2	Q706	B-2
		Q407	B-3	Q707	C-1
		Q408	B-3	Q708	C-2
		Q502	G-2		
		Q503	E-2		
		Q504	E-3		
		Q505	G-2		
		Q506	G-1		
		Q551	D-2		
		Q557	D-1		
		Q558	D-2		
		Q559	D-2		

PHOTO COUPLER	
PC201	D-3
PC202	D-3
PC501	E-2
PC502	F-1
PC504	F-1

TEST POINT	
TP5	H-6
TP9	B-4

VOLUME	
VR251	C-5
VR401	B-2

Parts Location

P-BOARD (COMPONENT SIDE)

IC		TRANSISTOR		TEST POINT	
IC201	D-4	Q201	E-5	TP5	B-6
IC501	D-2	Q202	E-4	TP9	H-4
		Q355	F-3		
		Q401	G-4		
		Q402	H-3		
		Q403	H-3		
		Q551	F-2		
		Q601	D-4		
		Q604	D-4		
		Q606	D-3		

VOLUME	
VR251	F-5
VR401	H-2

P-BOARD (COMPONENT SIDE)
ETX2MM805MEH

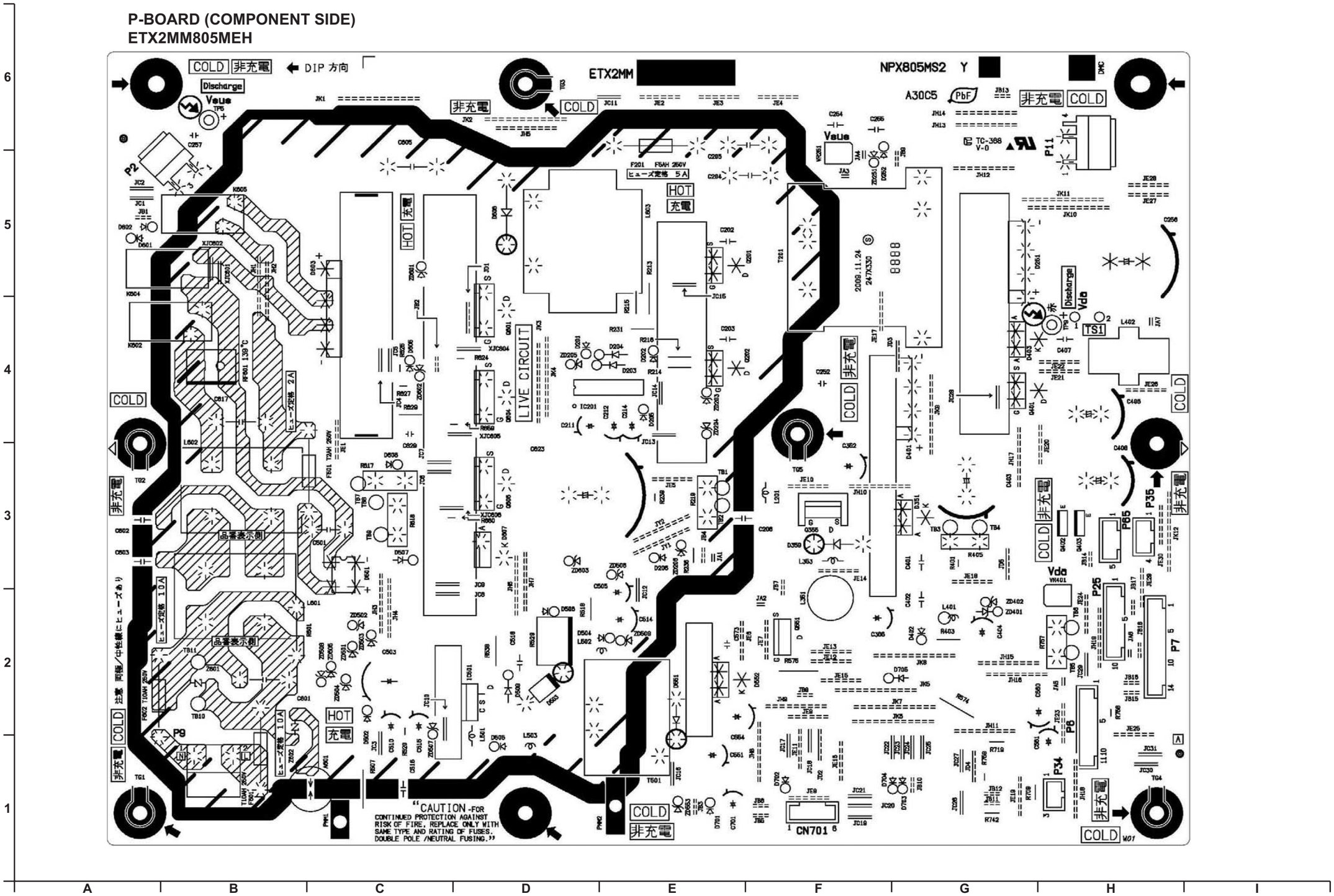

13.2. K, S and SS2-Board

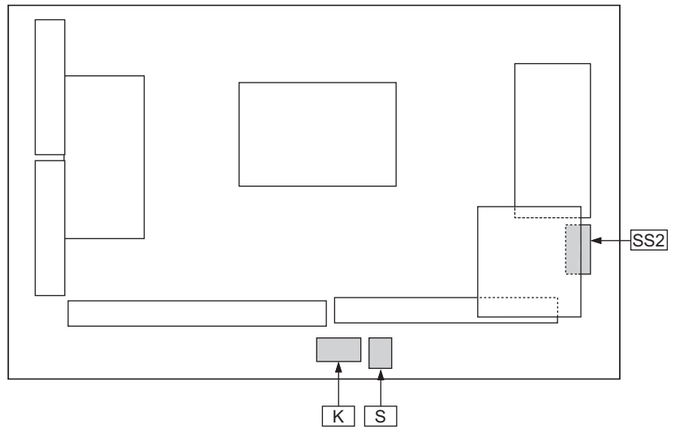

SS2-BOARD (FOIL SIDE)
TXNSS21HMUM

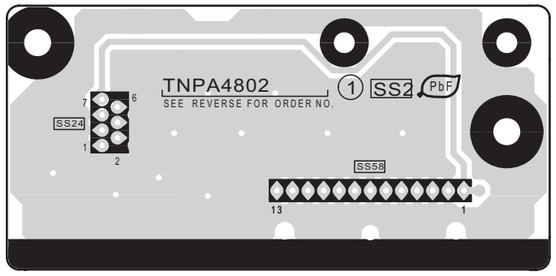

K-BOARD (FOIL SIDE)
TXN/K1LHUM

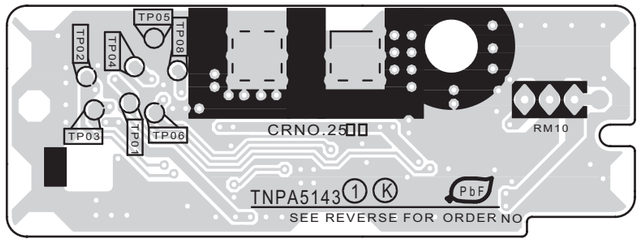

S-BOARD (FOIL SIDE)
TXN/S1EQUM

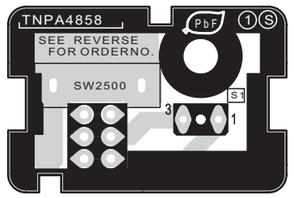

SS2-BOARD (COMPONENT SIDE)
TXNSS21HMUM

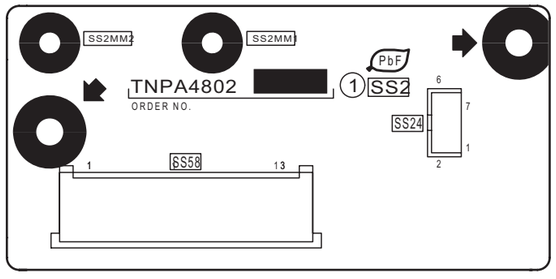

K-BOARD (COMPONENT SIDE)
TXN/K1LHUM

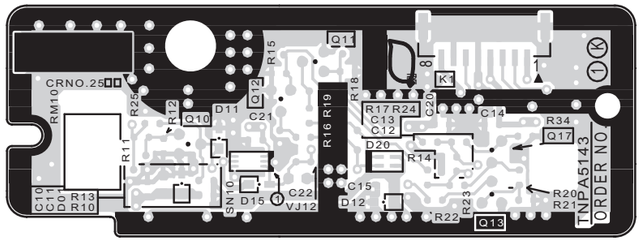

S-BOARD (COMPONENT SIDE)
TXN/S1EQUM

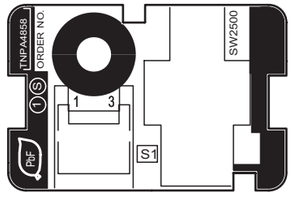

13.3. A-Board

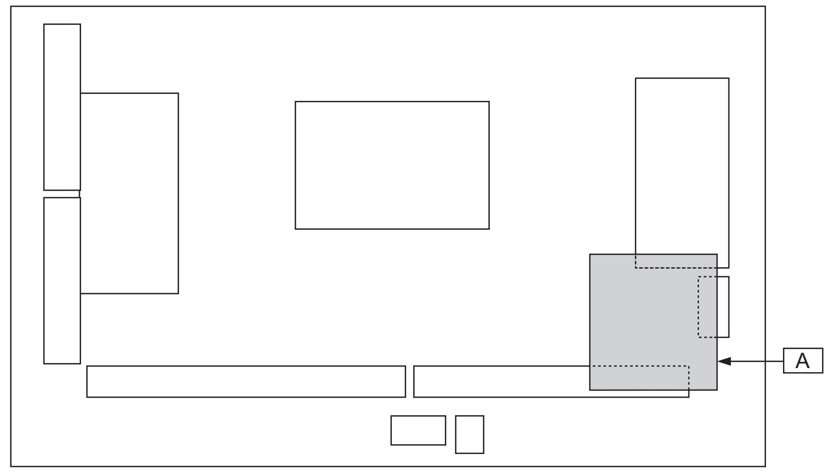

A-BOARD (FOIL SIDE)
TZTNP01LDUK(K) TZTNP01LGUM(M/V) TZTNP01LGUP(P)

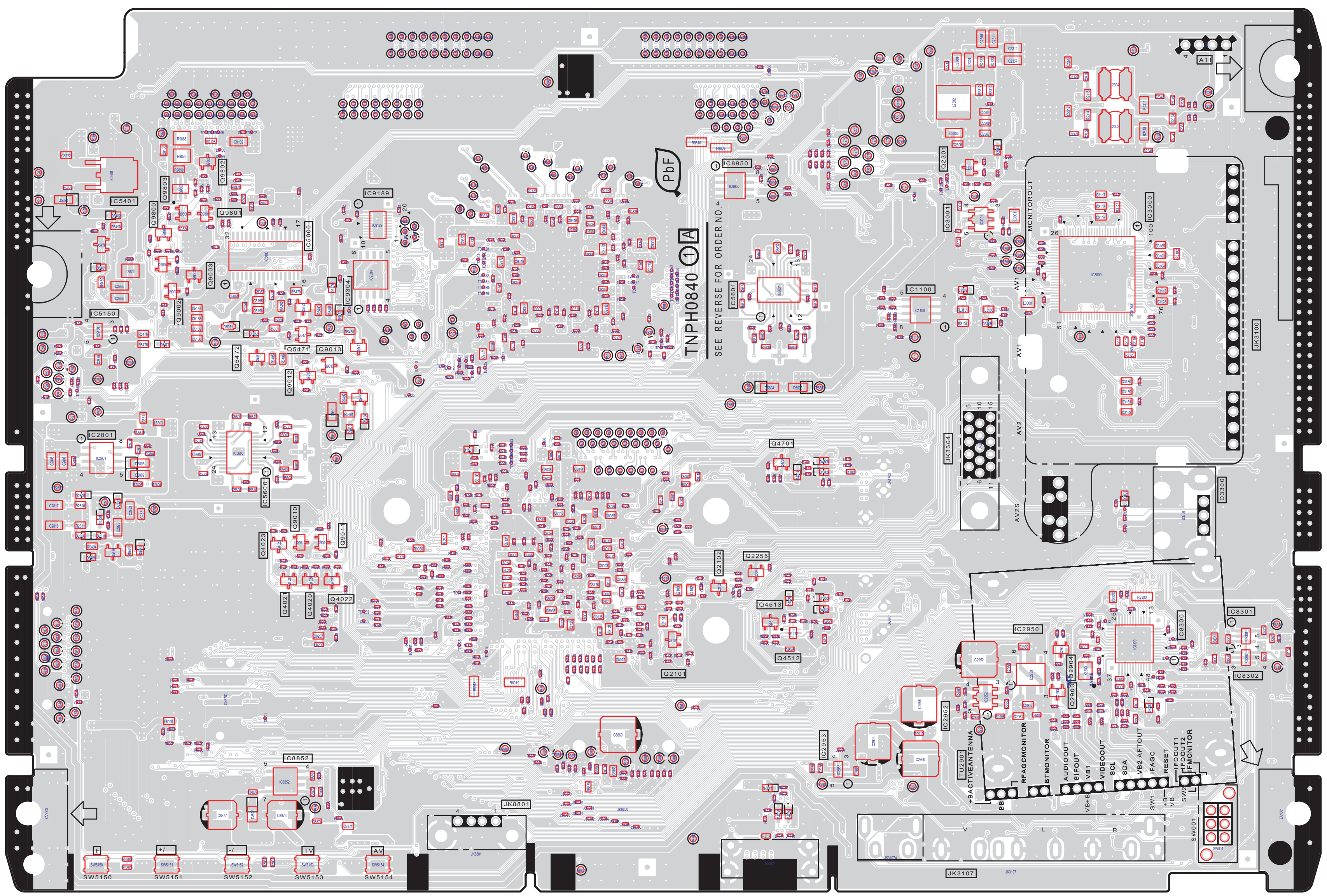

A-BOARD (COMPONENT SIDE)
TZTNP01LDUK(K) TZTNP01LGUM(M/V) TZTNP01LGUP(P)

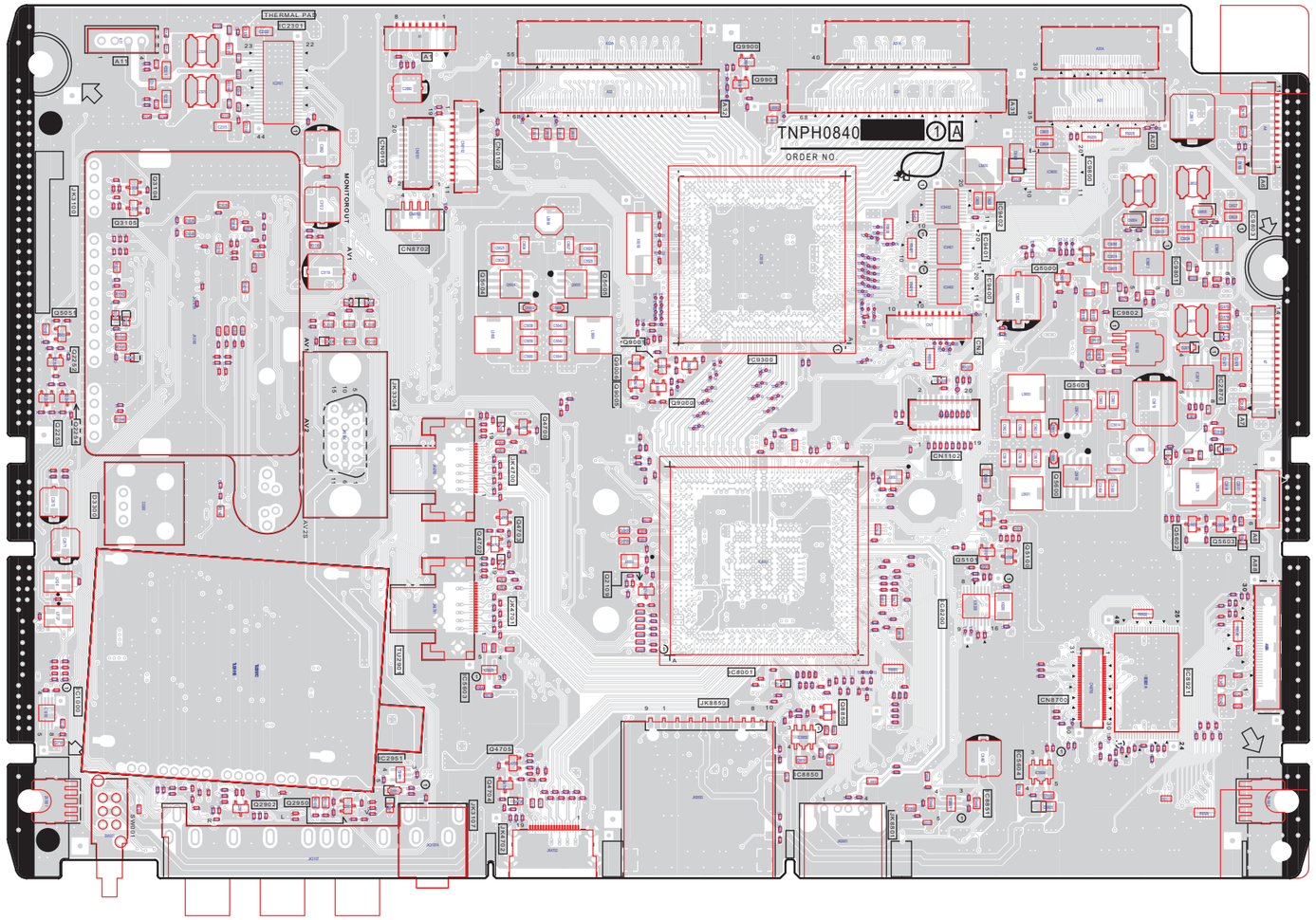

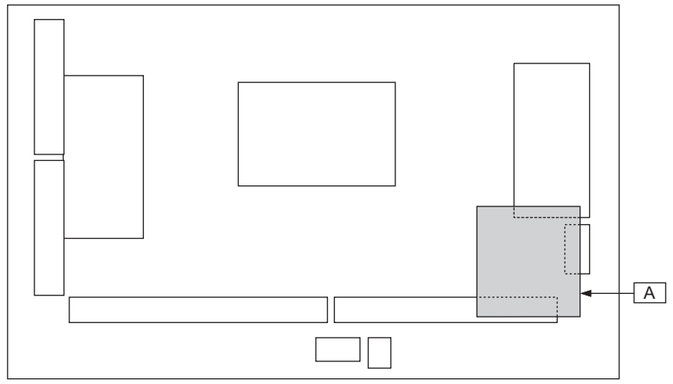

13.4. C1-Board

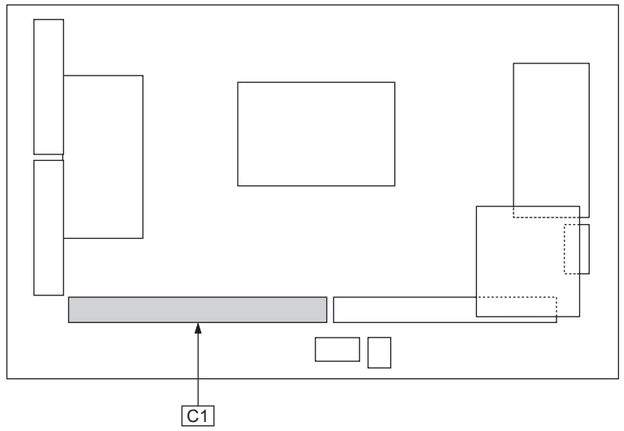

C1-BOARD (FOIL SIDE)
TXNC11LGUM

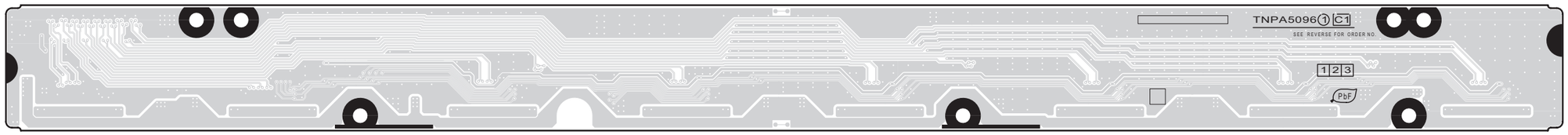

C1-BOARD (COMPONENT SIDE)
TXNC11LGUM

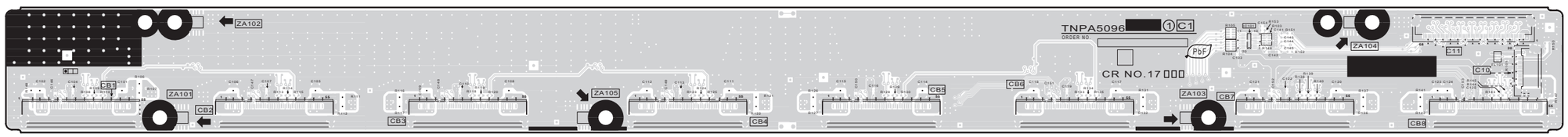

13.5. C2-Board

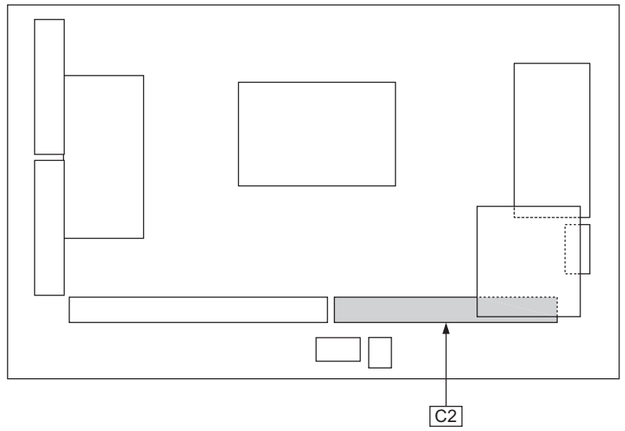

C2-BOARD (FOIL SIDE)
TXNC21LGUM

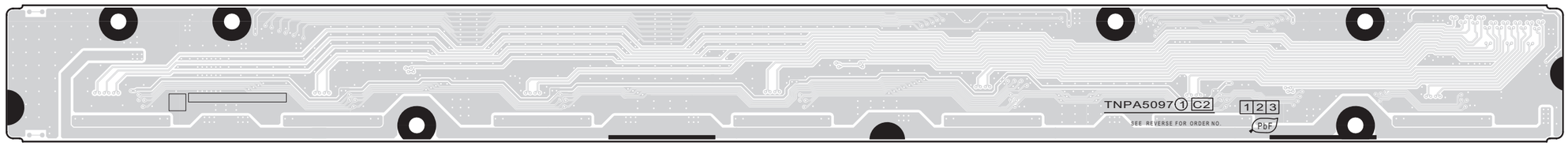

C2-BOARD (COMPONENT SIDE)
TXNC21LGUM

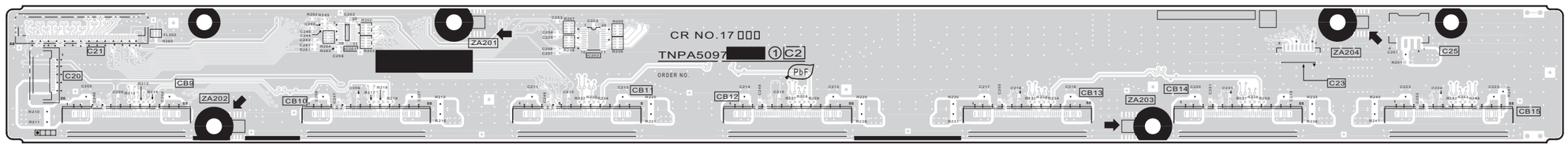

13.6. SC-Board

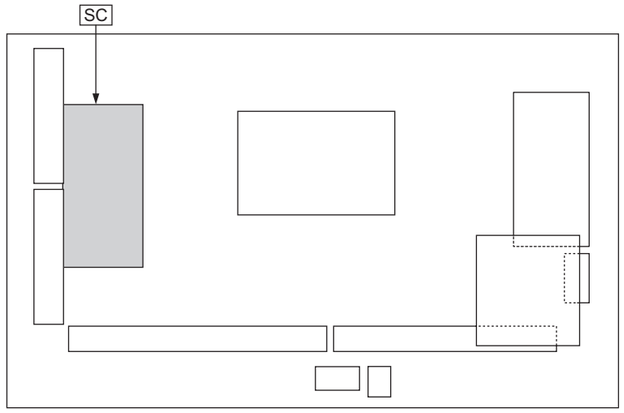

SC-BOARD (FOIL SIDE)
TXNSC1LGUM

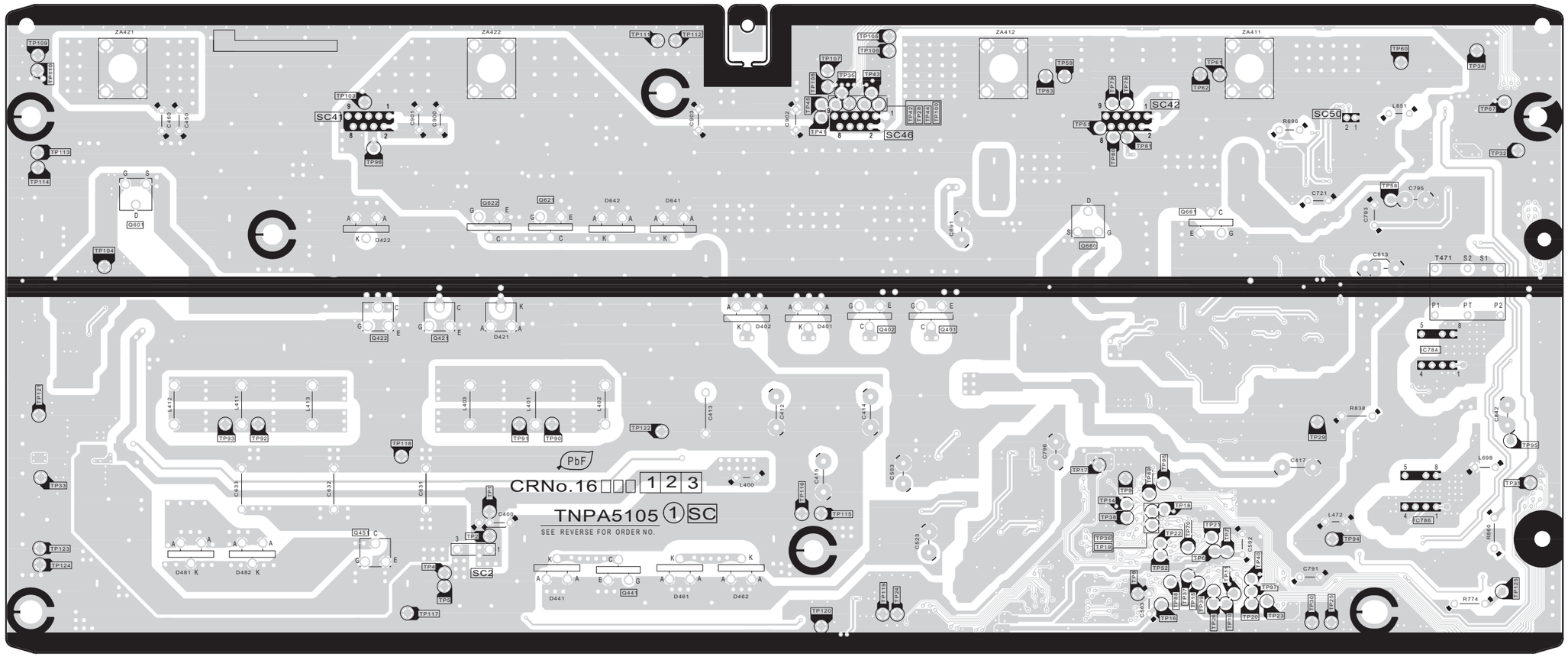

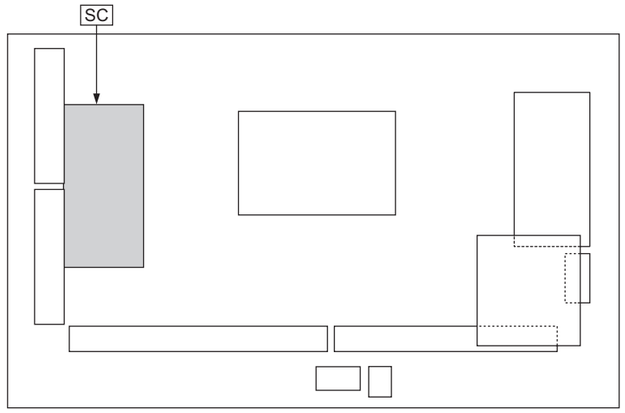

SC-BOARD (COMPONENT SIDE)
TXNSC1LGUM

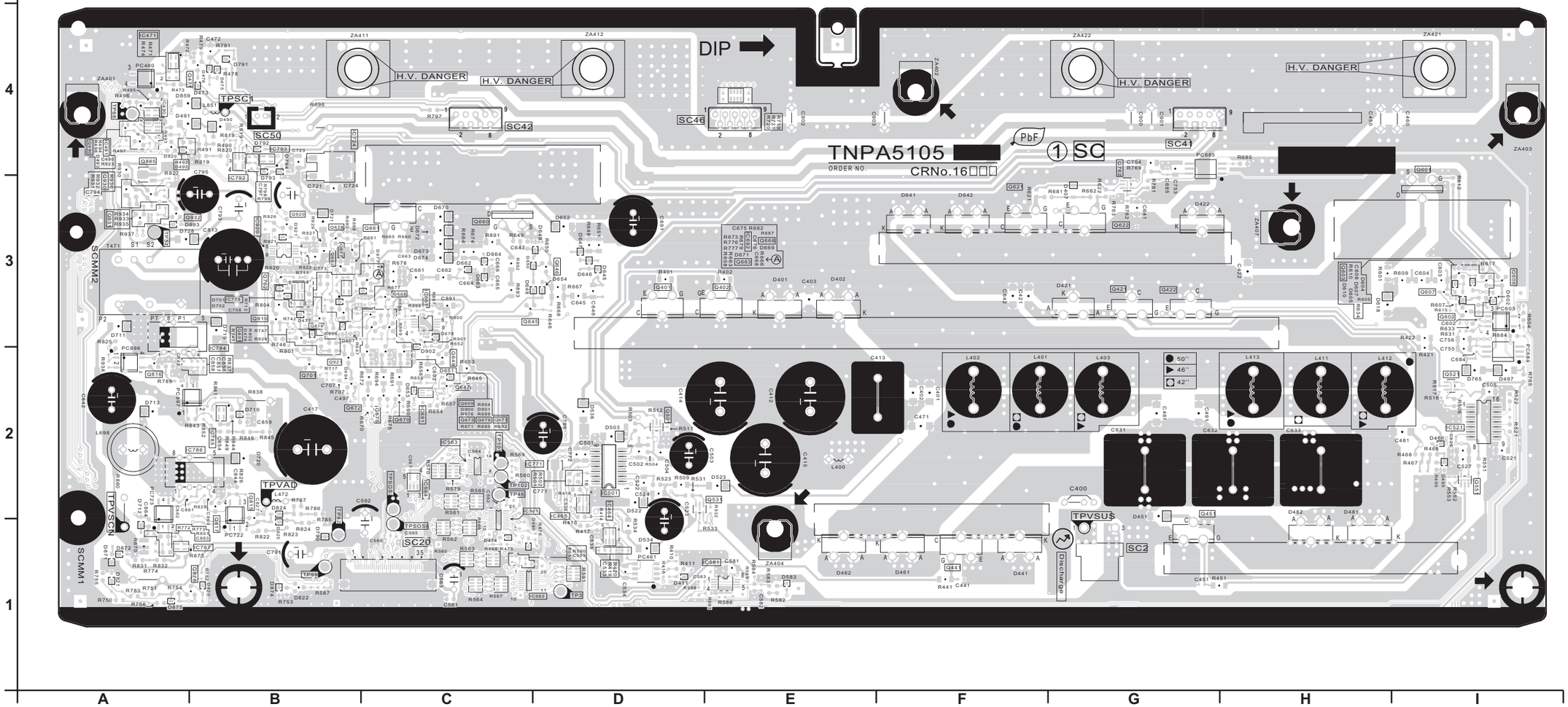

13.7. SS-Board

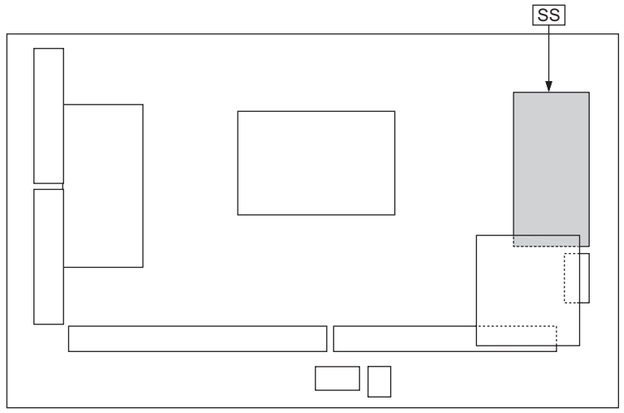

SS-BOARD (FOIL SIDE)
TXNSS1LGUM

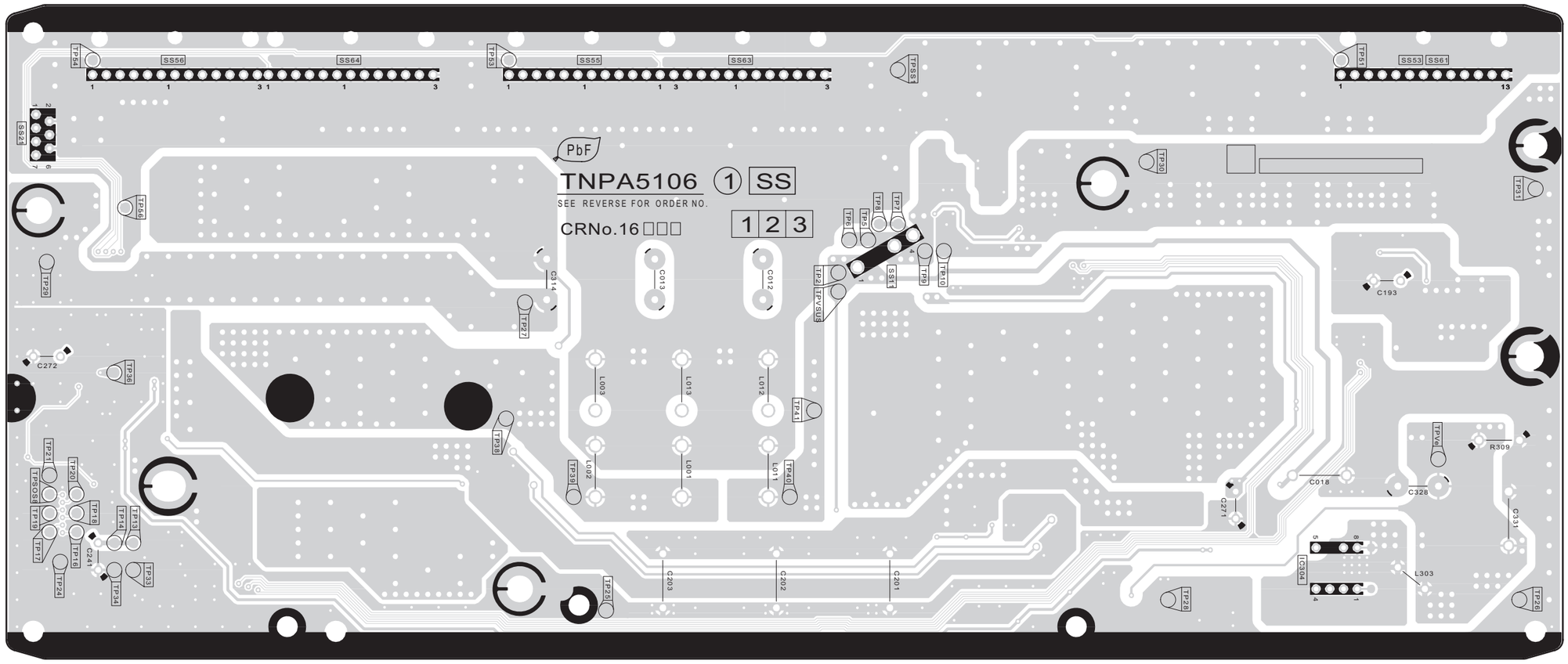

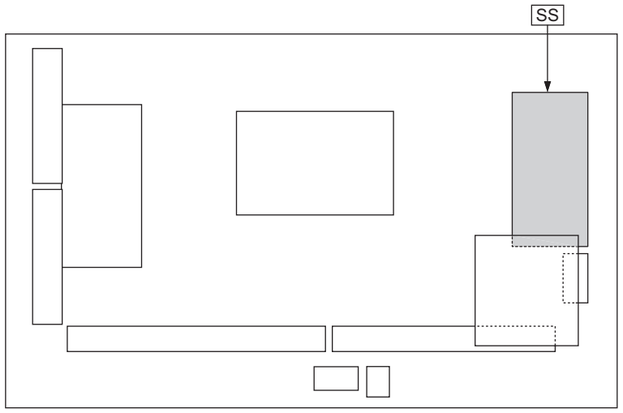

SS-BOARD (COMPONENT SIDE)
TXNSS1LGUM

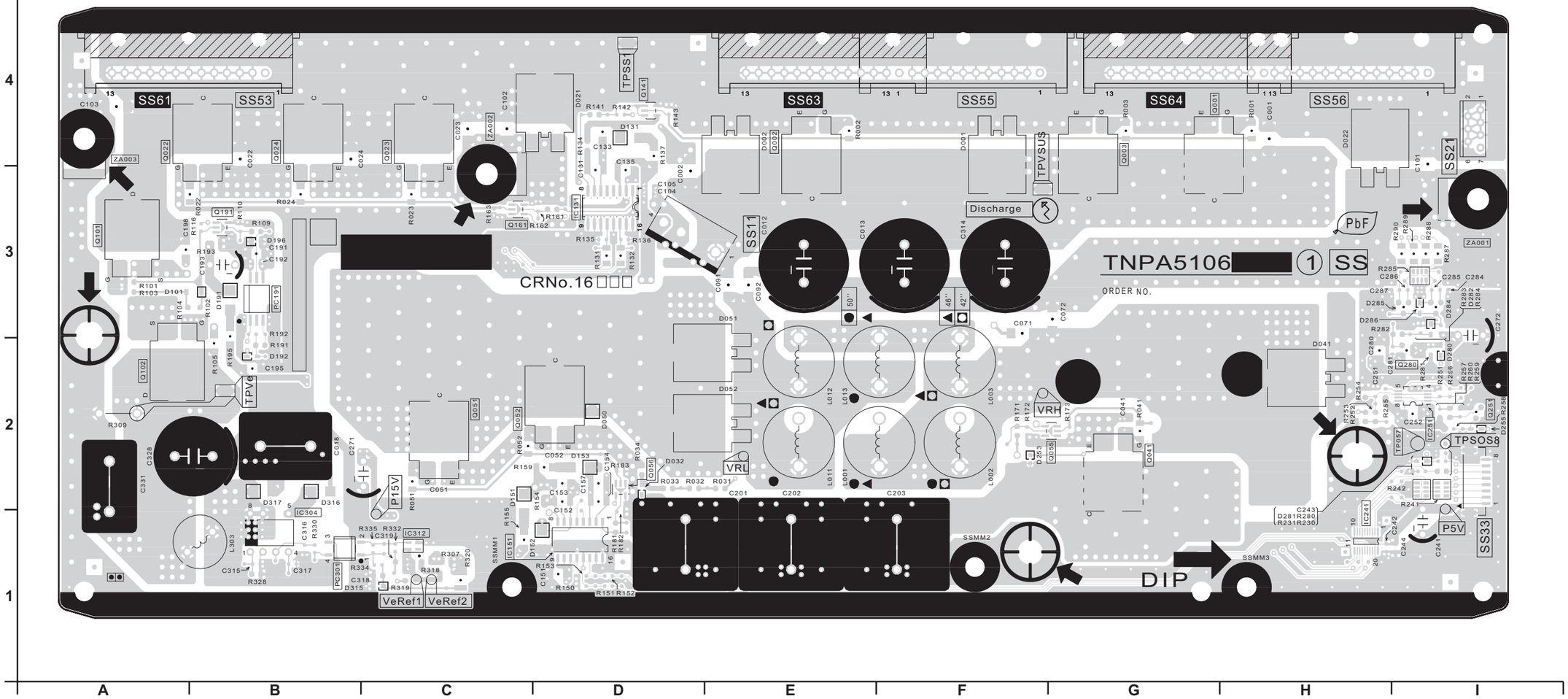

14 Exploded View and Replacement Parts List

14.1. Exploded View and Mechanical Replacement Parts List

14.1.1. Exploded View 1

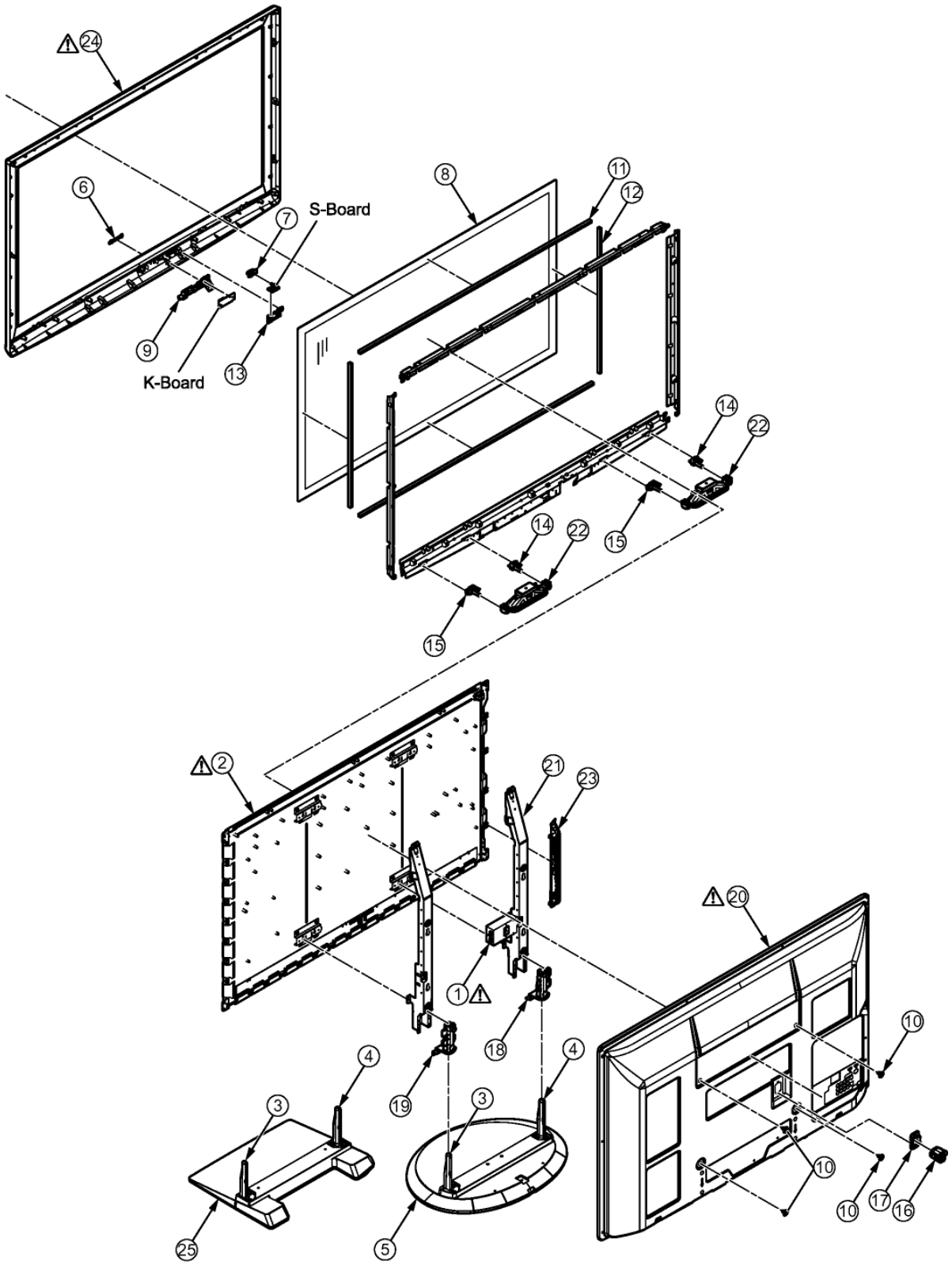

14.1.2. Exploded View 2

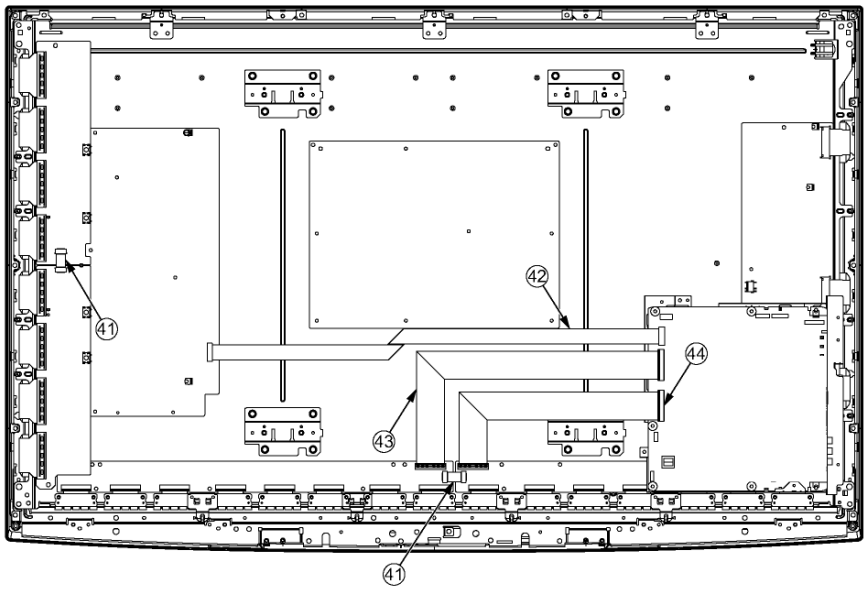

14.1.3. Packing 1

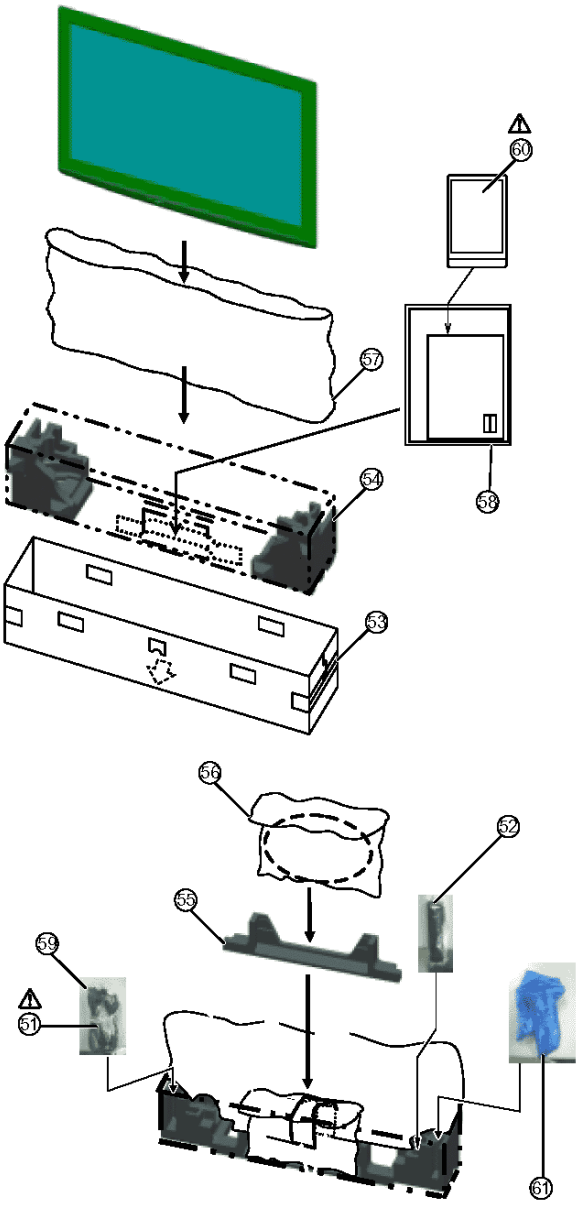

14.1.4. Packing 2

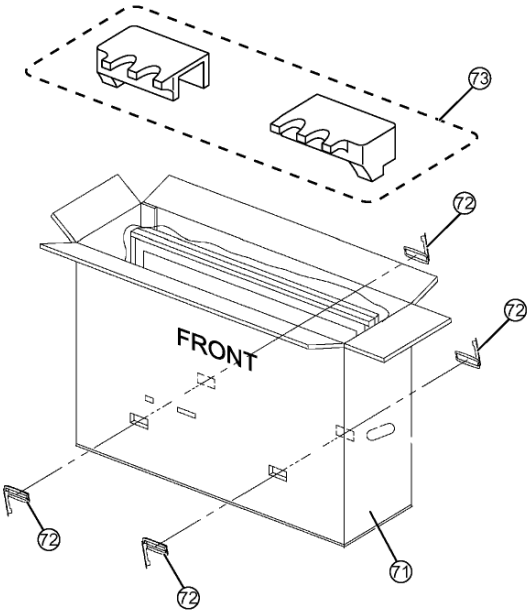

14.1.5. Mechanical Replacement Parts List

Note: All parts except parts mentioned [PAVCSG] in the Remarks column are supplied by AVC-CSPC.
Parts mentioned [PAVCSG] are supplied by PAVCSG.

Safety	Ref. No.	Part No.	Part Name & Description	Q'ty	Remarks
⚠	1	K2AHYH000033	AC INLET WITH CABLE	1	PAVCSG
⚠	51	K2CT3YY00021	AC CORD	1	PAVCSG K/M/V
⚠	51	K2CT3YY00022	AC CORD	1	PAVCSG P
⚠	2	MD46F13A1J	PLASMA DISPLAY PANEL	1	
	52	N2QAYB000370	REMOTE CONTROL	1	
	5	TBL3EX0010	PEDESTAL STAND	1	PAVCSG K/V
	3	TBLA3679	STAND POLE R	1	
	4	TBLA3680	STAND POLE L	1	
	25	TBLX0135	PEDESTAL STAND	1	PAVCSG M/P
	6	TBM3EA002	PANASONIC BADGE	1	PAVCSG
	7	TBX3EA00101	POWER BUTTON	1	
		THEJ0339	SCREW(BC-TUNER:1 SIDE_COVER:4)	5	
		THEL052Z	SCREW (BC TOP:4)	2	
		THEL080N	PF SCREW(5x30)	4	
		THTD020J	SCREW(A-PRINT:4)	4	
		THTF011N	SCREW	68	
	8	TKGA5616	FRONT GLASS	1	PAVCSG
	9	TKK3EC5001	LED PANEL	1	PAVCSG
	10	TKKL5493	M8 CAP	4	
	11	TMK3EG003	SPONGE(FRONT GLASS/UPPER/BOTTOM)	2	PAVCSG
	12	TMK3EG004	SPONGE(FRONT GLASS/LEFT/RIGHT)	2	PAVCSG
		TMM23417	CLAMPER	2	
		TMME292	CLAMPER	1	
		TMME331	CLAMPER(P:1)	1	
		TMME332	CLAMPER(HANGER:5)	5	
		TMME332	CLAMPER(SS:2)	2	
		TMME332	CLAMPER	2	
		TMME379	CLAMPER	3	
	13	TMW3EC001	POWER BUTTON BRACKET	1	PAVCSG
	14	TMW3EX002	SP BRACKET L	2	
	15	TMW3EX003	SP BRACKET R	2	
	16	TMXX064	AC CORD CLAMPER A	1	
	17	TMXX065	AC CORD CLAMPER B	1	
	18	TMZX5176	STAND BRACKET-L	1	
	19	TMZX5177	STAND BRACKET-R	1	
	71	TPC3EA01501	CARTON BOX TOP(WITH STAMP)	1	PAVCSG M
	71	TPC3EA01502	CARTON BOX TOP(WITH STAMP)	1	PAVCSG P
	53	TPC3EA01601	CARTON BOX BOTTOM	1	PAVCSG
	71	TPC3EA01903	CARTON BOX TOP(WITH STAMP)	1	PAVCSG K
	71	TPC3EA01905	CARTON BOX TOP(WITH STAMP)	1	PAVCSG V
	72	TPD169487	JOINT	4	
	73	TPD3EA0006-2	TOP CUSHION	1	PAVCSG
	54	TPD3EA0007-1	BOTTOM CUSHION	1	PAVCSG

Safety	Ref. No.	Part No.	Part Name & Description	Q'ty	Remarks
	55	TPD3EA0015	PEDESTAL CUSHION	1	PAVCSG K/V
	55	TPD3EA0023	PEDESTAL CUSHION	1	PAVCSG M/P
	56	TPE3EB001	BAG (PEDESTAL STAND)	1	PAVCSG K/V
	59	TPE3EP002	BAG FOR AC CORD	1	PAVCSG
	58	TPE3EP003	BAG (INSTRUCTION BOOK)	1	PAVCSG
		TPEB340	BAG (STAND ACCESSORY)	1	
	56	TPEB424	BAG (PEDESTAL STAND)	1	PAVCSG M/P
	57	TPEH419	SET BAG	1	PAVCSG
⚠	60	TQB3EC0003	INSTRUCTION BOOK (ENGLISH)	1	PAVCSG
⚠	60	TQB3EC0004	INSTRUCTION BOOK (ARABIC)	1	PAVCSG M/P
⚠	60	TQB3EC0007	INSTRUCTION BOOK (CHINESE)	1	PAVCSG K/V
⚠	60	TQB3EC0008	INSTRUCTION BOOK (VIETNAM)	1	PAVCSG V
		TQZJ203	SCREW USE HANDBILL	1	
	41	TSXL519	CABLE (C10-C20/SU11-SD11)	2	
	42	TSXL980	CABLE (A20-SC20)	1	PAVCSG
	43	TSXL981	CABLE (A31-C11)	1	PAVCSG
	44	TSXL982	CABLE (A32-C21)	1	PAVCSG
⚠	20	TTU3EA0065	REAR COVER	1	PAVCSG M
⚠	20	TTU3EA0086	REAR COVER	1	PAVCSG P
⚠	20	TTU3EA0090	REAR COVER	1	PAVCSG K
⚠	20	TTU3EA0099	REAR COVER	1	PAVCSG V
	21	TUX0E153	46HANGER METAL	2	PAVCSG
	22	TXFEA01LLUM	SPEAKER L/R ASSY	2	PAVCSG
	23	TXFKP01LHUM	SIDE TERMINAL COVER ASSY	1	PAVCSG
⚠	24	TXFKY01LDUVA	CABINET ASSY	1	PAVCSG K/V
⚠	24	TXFKY02LGUMA	CABINET ASSY	1	PAVCSG M/P
		TXJA11LGUM	SPEAKER LEAD (A11-SPL/SPR)	1	PAVCSG
		XSB3+6FJ	SCREW(HDMI:3)	3	
		XTB4+12GFJ	SCREW(GH:20 PW:2 LED:1)	21	
		XTB4+12GFJK	SCREW(BC:11)	11	
		XTB4+12GFN	SCREW (4*12)	6	
		XTV3+10JFJK	SCREW(REAR AV:2)	2	
		XTW3+10TFJ	SCREW	1	
		XYN3+F10FJK	SCREW(BC-AC_INLET:2)	2	
		XYN3+J10FJ	SCREW	17	
		XYN4+E6FJ	SCREW(INLET:1)	1	
		XYN4+F10FJ	SCREW(AL-GHT:4)	22	
		XYN5+F18FN	SCREW (STAND POLE)	4	
	61	XZB17X19C03	POLY BAG (STAND POLE)	1	
		XZB7.5X9D05	POLY BAG (SCREW)	1	

14.2. Electrical Replacement Parts List

14.2.1. Replacement Parts List Notes

RTL (Retention Time Limited)

Note: The marking (RTL) indicates that the Retention Time is Limited for this item.
After the discontinuation of this assembly in production, the item will continue to be available for a specific period of time. The retention period of availability is dependant on the type of assembly, and in accordance with the laws governing part and product retention. After the end of this period, the assembly will no longer be available.

Abbreviation of part name and description

1. Resistor

Example:

ERD25TJ104 C 100KOHM, J, 1/4W

Type Allowance

2. Capacitor

Example:

ECKF1H103ZF C 0.01UF, Z, 50V

Type Allowance

Type	Allowance
C : Carbon	F : ±1%
F : Fuse	G : ±2%
M : Metal Oxide Metal FIlm	J : ±5%
S : Solid	K : ±10%
W : Wire Wound	M : ±20%

Type	Allowance
C : Ceramic	C : ±0.25pF
E : Electrolytic	D : ±0.5pF
P : Polyester Polyprop lene	F : ±1pF
	G : ±3pF
	J : ±5pF
T : Tantalum	K : ±10pF
	L : ±15pF
	M : ±20pF
	P : +100%, -0%
	Z : +80%, -20%

14.2.2. Electrical Replacement Parts List

Note: All parts except parts mentioned [PAVCSG] in the Remarks column are supplied by AVC-CSPC. Parts mentioned [PAVCSG] are supplied by PAVCSG.

Safety	Ref. No.	Part No.	Part Name & Description	Pcs	Remarks
⚠	PCB	TZTNP01LDUK	CIRCUIT BOARD A	1	(RTL) PA VCSG K
⚠	PCB	TZTNP01LGUM	CIRCUIT BOARD A	1	(RTL) PA VCSG M/V
⚠	PCB	TZTNP01LGUP	CIRCUIT BOARD A	1	(RTL) PA VCSG P
⚠	PCB	ETX2MM805MEH	CIRCUIT BOARD P	1	(RTL) PA VCSG
⚠	PCB	TXNC11LGUM	CIRCUIT BOARD C1	1	(RTL) PA VCSG
⚠	PCB	TXNC21LGUM	CIRCUIT BOARD C2	1	(RTL) PA VCSG
⚠	PCB	TXNSC1LGUM	CIRCUIT BOARD SC	1	(RTL) PA VCSG
⚠	PCB	TXNSD1LDUV	CIRCUIT BOARD SD	1	PAVCSG
⚠	PCB	TXNSS1LGUM	CIRCUIT BOARD SS	1	(RTL) PA VCSG
⚠	PCB	TXNSS21HMUM	CIRCUIT BOARD SS2	1	(RTL) PA VCSG
⚠	PCB	TXNSU1LDUV	CIRCUIT BOARD SU	1	PAVCSG
⚠	PCB	TXN/S1EQUM	CIRCUIT BOARD S	1	(RTL) PA VCSG
⚠	PCB	TXN/K1LHUM	CIRCUIT BOARD K	1	(RTL) PA VCSG
	A1	K1KY08AA0719	8P CONNECTOR	1	
	A6	K1KY11AA0719	11P CONNECTOR	1	
	A7	K1KY14AA0719	14P CONNECTOR	1	PAVCSG
	A11	K1KA04AA0190	4P CONNECTOR	1	
	A20	K1MY35BA0345	35P CONNECTOR	1	
	A31	K1MY68BA0345	68P CONNECTOR	1	
	A32	K1MY68BA0345	68P CONNECTOR	1	
	C10	K1MN20BA0231	20P CONNECTOR	1	
	C11	K1MY68BA0345	68P CONNECTOR	1	
	C20	K1MY20BA0345	20P CONNECTOR	1	
	C21	K1MY68BA0345	68P CONNECTOR	1	
	C23	K1KY08AA0719	8P CONNECTOR	1	
	C25	K1KA04BA0107	4P CONNECTOR	1	
	C0900	F1G1C104A116	C 0.10UF, K, 16V	1	
	C1100	F1G1E103A123	C 0.010UF, K, 25V	1	
	C1101	F1G1E103A123	C 0.010UF, K, 25V	1	
	C1102	F1G1C104A116	C 0.10UF, K, 16V	1	
	C2055	F1J1A106A087	C 0.010UF, K, 10V	1	
	C2057	F1J1A106A087	C 0.010UF, K, 10V	1	
	C2067	F1G1C103A116	C 0.010UF, K, 16V	1	
	C2068	F1G1C103A116	C 0.010UF, K, 16V	1	
	C2071	EEEHB0J101UR	C 100PF, J, 6.3V	1	
	C2072	EEEHB0J101UR	C 100PF, J, 6.3V	1	
	C2073	F1G1E333A091	C 0.033UF, K, 25V	1	
	C2074	F1G1E333A091	C 0.033UF, K, 25V	1	
	C2104	F1G1H100A731	C 10PF, K, 50V	1	
	C2107	F1G1A105A047	C 1UF, K, 10V	1	
	C2108	F1G1A105A047	C 1UF, K, 10V	1	
	C2110	F1G1C104A116	C 0.10UF, K, 16V	1	
	C2301	F1G1C104A116	C 0.10UF, K, 16V	1	
	C2302	F1G1C104A116	C 0.10UF, K, 16V	1	

Safety	Ref. No.	Part No.	Part Name & Description	Pcs	Remarks
	C2304	F1J1E105A231	C 1 UF 25V	1	
	C2309	F1K1E106A136	C 10UF, Z, 25V	1	
	C2312	F1K1E106A136	C 10UF, Z, 25V	1	
	C2313	F1G1H102A730	C 1000UF, 50V	1	
	C2314	F1J1E105A231	C 1 UF 25V	1	
	C2316	F1H1H104A970	C 0.1UF, K, 50V	1	
	C2317	F1J1E105A231	C 1 UF 25V	1	
	C2318	F1H1H104A970	C 0.1UF, K, 50V	1	
	C2320	F1J1E105A231	C 1 UF 25V	1	
	C2321	F1H1H104A970	C 0.1UF, K, 50V	1	
	C2323	F1H1H104A970	C 0.1UF, K, 50V	1	
	C2324	F1J1E105A231	C 1 UF 25V	1	
	C2325	F1G1H102A730	C 1000UF, 50V	1	
	C2334	F1J1H474A757	C 0.47UF, 50V	1	
	C2335	F1H1E104A129	C 0.1UF, 25V	1	
	C2336	F1H1E104A129	C 0.1UF, 25V	1	
	C2337	F1J1H474A757	C 0.47UF, 50V	1	
	C2338	F1H1E104A129	C 0.1UF, 25V	1	
	C2339	F1H1E104A129	C 0.1UF, 25V	1	
	C2340	F1H1H223A970	C 0.22UF, K, 50V	1	
	C2341	F1H1H223A970	C 0.22UF, K, 50V	1	
	C2342	F1H1H223A970	C 0.22UF, K, 50V	1	
	C2343	F1H1H223A970	C 0.22UF, K, 50V	1	
	C2344	F1H1H223A970	C 0.22UF, K, 50V	1	
	C2345	F1H1H223A970	C 0.22UF, K, 50V	1	
	C2346	F1H1H223A970	C 0.22UF, K, 50V	1	
	C2347	F1H1H223A970	C 0.22UF, K, 50V	1	
	C2349	F1G1H102A730	C 1000UF, 50V	1	
	C2351	F1G1H102A730	C 1000UF, 50V	1	
	C2353	F1G1H102A730	C 1000UF, 50V	1	
	C2355	F1G1H102A730	C 1000UF, 50V	1	
	C2356	F1K1E106A136	C 10UF, Z, 25V	1	
	C2357	F1K1E106A136	C 10UF, Z, 25V	1	
	C2510	F1H1H103A970	C 0.001UF, K, 50V	1	
	C2511	F1J1A106A087	C 0.010UF, K, 10V	1	
	C2515	F1H1H103A970	C 0.001UF, K, 50V	1	
	C2521	F1H1C104A143	C 0.1UF, K, 16V	1	
	C2751	F1J1E105A231	C 1 UF 25V	1	
	C2824	F1J1A106A087	C 0.010UF, K, 10V	1	
	C2871	F1K1E106A136	C 10UF, Z, 25V	1	
	C2872	F1G1E103A123	C 0.010UF, K, 25V	1	
	C2873	F1J1A106A087	C 0.010UF, K, 10V	1	
	C2874	F1J1A106A087	C 0.010UF, K, 10V	1	
	C2877	F1H1H223A970	C 0.22UF, K, 50V	1	
	C2878	F1H1H472A970	C 4700PF, K, 50V	1	
	C2879	F1G1E103A123	C 0.010UF, K, 25V	1	
	C2883	F2H1E470A007	E 47UF, 25V	1	
	C2884	F1J1E105A231	C 1 UF 25V	1	
	C2885	F1K1E106A136	C 10UF, Z, 25V	1	
	C2886	F1K1E106A136	C 10UF, Z, 25V	1	
	C2905	EEEHB1C101P	C 100PF, J, 16V	1	
	C2907	F1G1C104A116	C 0.10UF, K, 16V	1	
	C2908	F1G1C104A116	C 0.10UF, K, 16V	1	
	C2910	F1G1C104A116	C 0.10UF, K, 16V	1	
	C2911	F1G1C104A116	C 0.10UF, K, 16V	1	
	C2917	F1G1H222A730	C 2200UF, 50V	1	
	C2919	F1G1C103A116	C 0.010UF, K, 16V	1	

Safety	Ref. No.	Part No.	Part Name & Description	Pcs	Remarks
	C2959	F1G1C104A116	C 0.10UF, K, 16V	1	
	C2961	ECJ1VB1A105K	C 0.01UF, Z, 10V	1	
	C2965	ECJ1VB1A105K	C 0.01UF, Z, 10V	1	
	C2966	F1H1A225A051	C 22UF, 50V	1	
	C3003	F1G1C104A116	C 0.10UF, K, 16V	1	
	C3004	F1G1C104A116	C 0.10UF, K, 16V	1	
	C3011	F1J1A106A087	C 0.010UF, K, 10V	1	
	C3015	F1J1A106A087	C 0.010UF, K, 10V	1	
	C3016	F1G1C104A116	C 0.10UF, K, 16V	1	
	C3018	F1G1C104A116	C 0.10UF, K, 16V	1	
	C3019	F1G1C104A116	C 0.10UF, K, 16V	1	
	C3022	ECJ1VB1A105K	C 0.01UF, Z, 10V	1	
	C3023	ECJ1VB1A105K	C 0.01UF, Z, 10V	1	
	C3024	F1J1A106A087	C 0.010UF, K, 10V	1	
	C3025	F1J1A106A087	C 0.010UF, K, 10V	1	
	C3026	F1J1A106A087	C 0.010UF, K, 10V	1	
	C3031	ECJ1VB1A105K	C 0.01UF, Z, 10V	1	
	C3032	ECJ1VB1A105K	C 0.01UF, Z, 10V	1	
	C3105	F1G1H561A730	C 56UF, 50V	1	
	C3106	F1G1H561A730	C 56UF, 50V	1	
	C3108	F1G1E333A091	C 0.033UF, K, 25V	1	
	C3109	F1G1E333A091	C 0.033UF, K, 25V	1	
	C3111	ECJ1VB1A105K	C 0.01UF, Z, 10V	1	
	C3112	ECJ1VB1A105K	C 0.01UF, Z, 10V	1	
	C3113	F1J1A106A087	C 0.010UF, K, 10V	1	
	C3116	F1J1A106A087	C 0.010UF, K, 10V	1	
	C3117	F1J1A106A087	C 0.010UF, K, 10V	1	
	C3118	F1J1A106A087	C 0.010UF, K, 10V	1	
	C3119	EEEHB1C101P	C 100PF, J, 16V	1	
	C3122	EEEHB1C101P	C 100PF, J, 16V	1	
	C3123	F1J1A106A087	C 0.010UF, K, 10V	1	
	C3137	F1G1H561A730	C 56UF, 50V	1	
	C3138	F1G1H561A730	C 56UF, 50V	1	
	C3149	ECJ1VB1A105K	C 0.01UF, Z, 10V	1	
	C3150	ECJ1VB1A105K	C 0.01UF, Z, 10V	1	
	C3153	F1G1H561A730	C 56UF, 50V	1	
	C3154	F1G1H561A730	C 56UF, 50V	1	
	C3155	F1G1H561A730	C 56UF, 50V	1	
	C3156	F1G1H561A730	C 56UF, 50V	1	
	C3157	ECJ1VB1A105K	C 0.01UF, Z, 10V	1	
	C3158	ECJ1VB1A105K	C 0.01UF, Z, 10V	1	
	C3159	F1J1A106A087	C 0.010UF, K, 10V	1	
	C3160	F1J1A106A087	C 0.010UF, K, 10V	1	
	C3161	F1J1A106A087	C 0.010UF, K, 10V	1	
	C3162	F1J1A106A087	C 0.010UF, K, 10V	1	
	C3163	F1J1A106A087	C 0.010UF, K, 10V	1	
	C3164	F1J1A106A087	C 0.010UF, K, 10V	1	
	C3165	F1J1A106A087	C 0.010UF, K, 10V	1	
	C4546	ECJ1VB0J105K	C 1UF, K, 6.3V	1	
	C4547	ECJ1VB0J105K	C 1UF, K, 6.3V	1	
	C4662	ECJ1VB0J105K	C 1UF, K, 6.3V	1	
	C4663	ECJ1VB0J105K	C 1UF, K, 6.3V	1	
	C4664	ECJ1VB0J105K	C 1UF, K, 6.3V	1	
	C4665	ECJ1VB0J105K	C 1UF, K, 6.3V	1	
	C4666	ECJ1VB0J105K	C 1UF, K, 6.3V	1	
	C4667	ECJ1VB0J105K	C 1UF, K, 6.3V	1	
	C4701	F1G1C104A116	C 0.10UF, K, 16V	1	
	C4702	F1G1C104A116	C 0.10UF, K, 16V	1	

Safety	Ref. No.	Part No.	Part Name & Description	Pcs	Remarks
	C4704	F1G1C104A116	C 0.10UF, K, 16V	1	
	C4705	F1G1C104A116	C 0.10UF, K, 16V	1	
	C4707	F1G1C104A116	C 0.10UF, K, 16V	1	
	C4708	F1G1C104A116	C 0.10UF, K, 16V	1	
	C5000	F1G1C104A116	C 0.10UF, K, 16V	1	
	C5001	F1G1C104A116	C 0.10UF, K, 16V	1	
	C5002	F1G1C104A116	C 0.10UF, K, 16V	1	
	C5003	F1G1C104A116	C 0.10UF, K, 16V	1	
	C5004	F1G1H102A730	C 1000UF, 50V	1	
	C5050	F1J1A475A087	C 4.7UF, K, 10V	1	
	C5052	F2G1A221A149	E 220UF, 10V	1	
	C5055	F1G1C104A116	C 0.10UF, K, 16V	1	
	C5058	ECJ1VB0J105K	C 1UF, K, 6.3V	1	
	C5100	F1G1C104A116	C 0.10UF, K, 16V	1	
	C5101	F1H1A474A084	C 0.47UF, 50V	1	
	C5155	F1J0J106A004	C 0.010UF, K, 16V	1	
	C5156	F1J0J106A004	C 0.010UF, K, 16V	1	
	C5157	F1J0J106A004	C 0.010UF, K, 16V	1	
	C5158	F1J0J106A004	C 0.010UF, K, 16V	1	
	C5159	F1J0J106A004	C 0.010UF, K, 16V	1	
	C5160	F1J0J106A004	C 0.010UF, K, 16V	1	
	C5471	F1G1C104A116	C 0.10UF, K, 16V	1	
	C5472	F1G1C104A116	C 0.10UF, K, 16V	1	
	C5600	F1K1E106A136	C 10UF, Z, 25V	1	
	C5601	F1K1E106A136	C 10UF, Z, 25V	1	
	C5602	F1G1E682A123	C 6800UF, Z, 25V	1	
	C5603	F1K1E106A136	C 10UF, Z, 25V	1	
	C5604	F1K1E106A136	C 10UF, Z, 25V	1	
	C5606	F1G1A154A053	C0.015UF, K, 10V	1	
	C5607	F1J1A475A087	C 4.7UF, K, 10V	1	
	C5608	F1H1C104A143	C 0.1UF, K, 16V	1	
	C5609	F1H1C104A143	C 0.1UF, K, 16V	1	
	C5611	F1J1E105A231	C 1 UF 25V	1	
	C5612	F1H1C105A145	C 0.01UF, K, 16V	1	
	C5615	F1H1A225A051	C 22UF, 50V	1	
	C5616	F1G1E103A123	C 0.010UF, K, 25V	1	
	C5617	F1K0J226A008	C 22UF, K,6.3V	1	
	C5618	F1K0J226A008	C 22UF, K,6.3V	1	
	C5619	F1K0J226A008	C 22UF, K,6.3V	1	
	C5620	F1K0J226A008	C 22UF, K,6.3V	1	
	C5621	F1K0J226A008	C 22UF, K,6.3V	1	
	C5622	F1K0J226A008	C 22UF, K,6.3V	1	
	C5625	F1K1E106A136	C 10UF, Z, 25V	1	
	C5626	F1K1E106A136	C 10UF, Z, 25V	1	
	C5627	F1G1A393A053	C0.015UF, K, 10V	1	
	C5628	F1K1E106A136	C 10UF, Z, 25V	1	
	C5629	F1K1E106A136	C 10UF, Z, 25V	1	
	C5631	F1G1C104A116	C 0.10UF, K, 16V	1	
	C5632	F1J1A475A087	C 4.7UF, K, 10V	1	
	C5633	F1H1C104A143	C 0.1UF, K, 16V	1	
	C5634	F1H1C104A143	C 0.1UF, K, 16V	1	
	C5635	F1H1C105A145	C 0.01UF, K, 16V	1	
	C5641	F1K0J226A008	C 22UF, K,6.3V	1	
	C5642	F1K0J226A008	C 22UF, K,6.3V	1	
	C5643	F1K0J226A008	C 22UF, K,6.3V	1	
	C5649	ECJ1VB1A105K	C 0.01UF, Z, 10V	1	
	C5650	F1H1A225A051	C 22UF, 50V	1	
	C5651	F1J1A475A087	C 4.7UF, K, 10V	1	
	C5652	F1J1A475A087	C 4.7UF, K, 10V	1	
	C5658	F1K0J226A008	C 22UF, K,6.3V	1	
	C5659	F1K0J226A008	C 22UF, K,6.3V	1	
	C5660	F1K0J226A008	C 22UF, K,6.3V	1	
	C5722	F1J1E105A231	C 1 UF 25V	1	
	C5723	F1H1C105A145	C 0.01UF, K, 16V	1	
	C8000	F1G1C104A116	C 0.10UF, K, 16V	1	
	C8001	F1G1C104A116	C 0.10UF, K, 16V	1	
	C8002	F1G1C104A116	C 0.10UF, K, 16V	1	

Safety	Ref. No.	Part No.	Part Name & Description	Pcs	Remarks
	C8003	F1G1C104A116	C 0.10UF, K, 16V	1	
	C8004	F1G1C104A116	C 0.10UF, K, 16V	1	
	C8005	F1G1C104A116	C 0.10UF, K, 16V	1	
	C8006	F1G1C104A116	C 0.10UF, K, 16V	1	
	C8007	F1G1C104A116	C 0.10UF, K, 16V	1	
	C8008	F1G1C104A116	C 0.10UF, K, 16V	1	
	C8009	F1G1C104A116	C 0.10UF, K, 16V	1	
	C8010	F1G1C104A116	C 0.10UF, K, 16V	1	
	C8011	F1G1C104A116	C 0.10UF, K, 16V	1	
	C8012	F1G1C104A116	C 0.10UF, K, 16V	1	
	C8013	F1G1C104A116	C 0.10UF, K, 16V	1	
	C8014	F1G1C104A116	C 0.10UF, K, 16V	1	
	C8015	ECJ1VB0J105K	C 1UF, K, 6.3V	1	
	C8016	ECJ1VB0J105K	C 1UF, K, 6.3V	1	
	C8017	F1G1C104A116	C 0.10UF, K, 16V	1	
	C8019	F1G1C104A116	C 0.10UF, K, 16V	1	
	C8020	F1G1C104A116	C 0.10UF, K, 16V	1	
	C8021	F1G1C104A116	C 0.10UF, K, 16V	1	
	C8022	F1J1A106A087	C 0.010UF, K, 10V	1	
	C8023	F1J1A106A087	C 0.010UF, K, 10V	1	
	C8024	F1J1A106A087	C 0.010UF, K, 10V	1	
	C8035	F1J1A106A087	C 0.010UF, K, 10V	1	
	C8036	F1J1A106A087	C 0.010UF, K, 10V	1	
	C8037	F1G1C104A116	C 0.10UF, K, 16V	1	
	C8042	ECJ1VB0J105K	C 1UF, K, 6.3V	1	
	C8044	F1J1A106A087	C 0.010UF, K, 10V	1	
	C8045	F1G1C104A116	C 0.10UF, K, 16V	1	
	C8046	F1G1C104A116	C 0.10UF, K, 16V	1	
	C8047	F1G1C104A116	C 0.10UF, K, 16V	1	
	C8048	ECJ1VB0J105K	C 1UF, K, 6.3V	1	
	C8050	F1G1C104A116	C 0.10UF, K, 16V	1	
	C8051	F1G1C104A116	C 0.10UF, K, 16V	1	
	C8052	F1G1C104A116	C 0.10UF, K, 16V	1	
	C8053	F1G1C104A116	C 0.10UF, K, 16V	1	
	C8054	F1G1C104A116	C 0.10UF, K, 16V	1	
	C8055	F1G1C104A116	C 0.10UF, K, 16V	1	
	C8056	F1G1C104A116	C 0.10UF, K, 16V	1	
	C8057	F1G1C104A116	C 0.10UF, K, 16V	1	
	C8058	F1G1C104A116	C 0.10UF, K, 16V	1	
	C8062	F1G1C104A116	C 0.10UF, K, 16V	1	
	C8063	F1G1C104A116	C 0.10UF, K, 16V	1	
	C8064	F1J0G2260001	C 0.001UF, 6.3V	1	
	C8067	F1G1C104A116	C 0.10UF, K, 16V	1	
	C8068	F1G1C104A116	C 0.10UF, K, 16V	1	
	C8069	F1G1C104A116	C 0.10UF, K, 16V	1	
	C8070	F1G1C104A116	C 0.10UF, K, 16V	1	
	C8073	ECJ1VB0J105K	C 1UF, K, 6.3V	1	
	C8074	ECJ1VB0J105K	C 1UF, K, 6.3V	1	
	C8075	ECJ1VB0J105K	C 1UF, K, 6.3V	1	
	C8076	F1G1C104A116	C 0.10UF, K, 16V	1	
	C8077	F1G1E103A123	C 0.010UF, K, 25V	1	
	C8079	F1G1H120A731	C 12UF, 50V	1	
	C8080	F1G1H8R0A732	C 8.0UF, 50V	1	
	C8081	F1G1H100A731	C 10PF, K, 50V	1	
	C8082	F1G1H8R0A732	C 8.0UF, 50V	1	
	C8085	F1J1A106A087	C 0.010UF, K, 10V	1	
	C8091	F1G1C104A116	C 0.10UF, K, 16V	1	
	C8093	ECJ1VB0J105K	C 1UF, K, 6.3V	1	
	C8097	F1G1C104A116	C 0.10UF, K, 16V	1	
	C8099	ECJ1VB0J105K	C 1UF, K, 6.3V	1	
	C8100	F1J1A106A087	C 0.010UF, K, 10V	1	
	C8101	F1J1A106A087	C 0.010UF, K, 10V	1	
	C8104	ECJ1VB0J105K	C 1UF, K, 6.3V	1	
	C8105	F1G1C104A116	C 0.10UF, K, 16V	1	
	C8108	F1G1C104A116	C 0.10UF, K, 16V	1	

Safety	Ref. No.	Part No.	Part Name & Description	Pcs	Remarks
	C8110	F1G1C104A116	C 0.10UF, K, 16V	1	
	C8111	F1G1C104A116	C 0.10UF, K, 16V	1	
	C8112	F1G1C104A116	C 0.10UF, K, 16V	1	
	C8113	F1G1C104A116	C 0.10UF, K, 16V	1	
	C8114	F1G1C104A116	C 0.10UF, K, 16V	1	
	C8115	F1G1C104A116	C 0.10UF, K, 16V	1	
	C8116	F1G1C104A116	C 0.10UF, K, 16V	1	
	C8117	F1G1C104A116	C 0.10UF, K, 16V	1	
	C8120	F1G1C104A116	C 0.10UF, K, 16V	1	
	C8123	F1G1C104A116	C 0.10UF, K, 16V	1	
	C8124	F1J1A106A087	C 0.010UF, K, 10V	1	
	C8125	F1J1A106A087	C 0.010UF, K, 10V	1	
	C8126	F1J1A106A087	C 0.010UF, K, 10V	1	
	C8127	ECJ1VB0J105K	C 1UF, K, 6.3V	1	
	C8600	F1G1H102A730	C 1000UF, 50V	1	
	C8853	F1G1C104A116	C 0.10UF, K, 16V	1	
	C8854	F1G1C104A116	C 0.10UF, K, 16V	1	
	C8860	F2G1C470A022	E 47UF, 16V	1	
	C8861	F1G1C104A116	C 0.10UF, K, 16V	1	
	C8862	F1G1C103A116	C 0.010UF, K, 16V	1	
	C8863	F1J0G226A001	C 0.001UF, 6.3V	1	
	C8922	F1G1C104A116	C 0.10UF, K, 16V	1	
	C8923	F1G1C104A116	C 0.10UF, K, 16V	1	
	C8950	F1G1C103A116	C 0.010UF, K, 16V	1	
	C9040	F1G1C104A116	C 0.10UF, K, 16V	1	
	C9052	F1G1C104A116	C 0.10UF, K, 16V	1	
	C9066	F1K0J226A008	C 22UF, K,6.3V	1	
	C9067	F1G1H561A730	C 56UF, 50V	1	
	C9069	F1G1H561A730	C 56UF, 50V	1	
	C9100	F1J1A106A087	C 0.010UF, K, 10V	1	
	C9101	F1G1E103A123	C 0.010UF, K, 25V	1	
	C9102	F1K1E106A136	C 10UF, Z, 25V	1	
	C9103	F1G1E103A123	C 0.010UF, K, 25V	1	
	C9106	F1K1E106A136	C 10UF, Z, 25V	1	
	C9108	F1G1E103A123	C 0.010UF, K, 25V	1	
	C9116	F1G1C104A116	C 0.10UF, K, 16V	1	
	C9300	F1G1C104A116	C 0.10UF, K, 16V	1	
	C9301	F1G1H150A731	C 15UF, 50V	1	
	C9302	F1G1H180A731	C 18UF, 50V	1	
	C9303	F1G1C104A116	C 0.10UF, K, 16V	1	
	C9307	F1G1C104A116	C 0.10UF, K, 16V	1	
	C9308	F1G1C104A116	C 0.10UF, K, 16V	1	
	C9311	F1G1C104A116	C 0.10UF, K, 16V	1	
	C9312	F1J1A106A087	C 0.010UF, K, 10V	1	
	C9313	F1G1C104A116	C 0.10UF, K, 16V	1	
	C9314	F1J1A106A087	C 0.010UF, K, 10V	1	
	C9315	F1G1C104A116	C 0.10UF, K, 16V	1	
	C9316	F1J1A106A087	C 0.010UF, K, 10V	1	
	C9319	F1G1C104A116	C 0.10UF, K, 16V	1	
	C9322	F1G1C104A116	C 0.10UF, K, 16V	1	
	C9323	F1G1C104A116	C 0.10UF, K, 16V	1	
	C9325	F1G1C104A116	C 0.10UF, K, 16V	1	
	C9327	F1G1C104A116	C 0.10UF, K, 16V	1	
	C9335	F1J1A106A087	C 0.010UF, K, 10V	1	
	C9336	F1J1A106A087	C 0.010UF, K, 10V	1	
	C9337	F1J1A106A087	C 0.010UF, K, 10V	1	
	C9339	F1G1C104A116	C 0.10UF, K, 16V	1	
	C9340	F1G1C104A116	C 0.10UF, K, 16V	1	
	C9342	F1G1C104A116	C 0.10UF, K, 16V	1	
	C9344	F1G1C104A116	C 0.10UF, K, 16V	1	
	C9347	ECJ1VB0J105K	C 1UF, K, 6.3V	1	

Safety	Ref. No.	Part No.	Part Name & Description	Pcs	Remarks
	C9349	F1J1A106A087	C 0.010UF, K, 10V	1	
	C9350	F1G1C104A116	C 0.10UF, K, 16V	1	
	C9351	F1G1C104A116	C 0.10UF, K, 16V	1	
	C9352	ECJ1VB0J105K	C 1UF, K, 6.3V	1	
	C9356	F1G1C104A116	C 0.10UF, K, 16V	1	
	C9361	F1G1C104A116	C 0.10UF, K, 16V	1	
	C9363	F1G1C104A116	C 0.10UF, K, 16V	1	
	C9371	F1J1A106A087	C 0.010UF, K, 10V	1	
	C9372	F1J1A106A087	C 0.010UF, K, 10V	1	
	C9373	F1J1A106A087	C 0.010UF, K, 10V	1	
	C9374	F1G1C104A116	C 0.10UF, K, 16V	1	
	C9375	F1G1C104A116	C 0.10UF, K, 16V	1	
	C9380	F1G1C104A116	C 0.10UF, K, 16V	1	
	C9383	F1G1C104A116	C 0.10UF, K, 16V	1	
	C9391	F1J1A106A087	C 0.010UF, K, 10V	1	
	C9392	F1J1A106A087	C 0.010UF, K, 10V	1	
	C9394	F1G1C104A116	C 0.10UF, K, 16V	1	
	C9400	F1G1C104A116	C 0.10UF, K, 16V	1	
	C9401	F1G1C104A116	C 0.10UF, K, 16V	1	
	C9402	F1G1C104A116	C 0.10UF, K, 16V	1	
	C9800	F1H1E104A129	C 0.1UF, 25V	1	
	C9801	F1G1E682A123	C 6800UF, Z, 25V	1	
	C9803	F1G1E472A123	C 4200UF, Z, 25V	1	
	C9804	F1K1E106A136	C 10UF, Z, 25V	1	
	C9805	F1K1E106A136	C 10UF, Z, 25V	1	
	C9806	F1G1H101A731	C 100PF, K, 50V	1	
	C9807	F1G1H201A731	C 200 UF, K, 50V	1	
	C9809	F1G1H102A730	C 1000UF, 50V	1	
	C9811	F1G1C104A116	C 0.10UF, K, 16V	1	
	C9812	F1K1E106A136	C 10UF, Z, 25V	1	
	C9813	F1K1E106A136	C 10UF, Z, 25V	1	
	C9814	F1K0J226A008	C 22UF, K,6.3V	1	
	C9815	F1K0J226A008	C 22UF, K,6.3V	1	
	C9816	F1G1E103A123	C 0.010UF, K, 25V	1	
	C9825	F1K0J226A008	C 22UF, K,6.3V	1	
	C9827	F1K1E106A136	C 10UF, Z, 25V	1	
	C9828	F1K1E106A136	C 10UF, Z, 25V	1	
	C9829	F1G1C104A116	C 0.10UF, K, 16V	1	
	C9830	F1G1E103A123	C 0.010UF, K, 25V	1	
	C9831	F1G1H272A730	C 2700UF, 50V	1	
	C9834	F1K0J226A008	C 22UF, K,6.3V	1	
	C9835	F1K0J226A008	C 22UF, K,6.3V	1	
	C9900	F1G1E103A123	C 0.010UF, K, 25V	1	
	C16002	F1L2J562A022	C 5600UF, K,6.3V	1	
	C16012	F2A2T301A004	E 300UF, 220V	1	
	C16013	F2A2T301A004	E 300UF, 220V	1	
	C16018	F0C2E155A252	E 0.015UF, 250V	1	
	C16024	F1L2J332A022	C 3300UF, K,6.3V	1	
	C16041	F1H1H392A970	C 3900PF, K, 50V	1	
	C16071	F1L2J1020001	C 1000UF, K,6.3V	1	
	C16072	F1L2J1020001	C 1000UF, K,6.3V	1	
	C16091	F1L2J1020001	C 1000UF, K,6.3V	1	
	C16092	F1L2J1020001	C 1000UF, K,6.3V	1	
	C16101	F1L2J222A022	C 2200UF, K,6.3V	1	
	C16104	F1H1E470A130	C 47UF, K, 25V	1	
	C16105	F1H1E470A130	C 47UF, K, 25V	1	
	C16131	F1K1E475A134	C 4.7UF, Z, 25V	1	
	C16133	F1K1E475A134	C 4.7UF, Z, 25V	1	
	C16135	F1K1E105A029	C 1UF, Z, 25V	1	
	C16151	F1K1E105A029	C 1UF, Z, 25V	1	
	C16152	F1K1E475A134	C 4.7UF, Z, 25V	1	
	C16153	F1K1E475A134	C 4.7UF, Z, 25V	1	
	C16154	F1K1E475A134	C 4.7UF, Z, 25V	1	
	C16191	F1K1E475A134	C 4.7UF, Z, 25V	1	
	C16192	F1H1E104A129	C 0.1UF, 25V	1	
	C16193	EEUFC1E470	E 47UF, 25V	1	

Safety	Ref. No.	Part No.	Part Name & Description	Pcs	Remarks
	C16195	F1K1E105A029	C 1UF, Z, 25V	1	
	C16201	F0C2E405A252	E 0.040UF, 250V	1	
	C16202	F0C2E405A252	E 0.040UF, 250V	1	
	C16242	F1H1C105A145	C 0.01UF, K, 16V	1	
	C16243	F1H1H103A970	C 0.001UF, K, 50V	1	
	C16244	F1J1A106A087	C 0.010UF, K, 10V	1	
	C16251	F1H1C105A145	C 0.01UF, K, 16V	1	
	C16252	F1K1E105A029	C 1UF, Z, 25V	1	
	C16271	EEUFC1E221	E 220UF, 25V	1	
	C16280	F1K1E105A029	C 1UF, Z, 25V	1	
	C16285	F1H1H104A970	C 0.1UF, K, 50V	1	
	C16286	F1H1H104A970	C 0.1UF, K, 50V	1	
	C16287	F1H1H104A970	C 0.1UF, K, 50V	1	
	C16314	F2A2T301A004	E 300UF, 220V	1	
	C16315	ECJ1VB1A105K	C 0.01UF, Z, 10V	1	
	C16316	F1H1C104A143	C 0.1UF, K, 16V	1	
	C16317	ECJ1VB1A105K	C 0.01UF, Z, 10V	1	
	C16318	F1J1H104A835	C 0.10UF, 50V	1	
	C16319	F1J1H104A835	C 0.10UF, 50V	1	
	C16328	F2A2C221A195	E 2200UF, 160V	1	
	C16331	F0C2E105A252	E 0.010UF, 250V	1	
	C16401	F1L2J562A022	C 5600UF, K,6.3V	1	
	C16412	F2A2T301A004	E 300UF, 220V	1	
	C16413	F0C2E155A252	E 0.015UF, 250V	1	
	C16414	F2A2T301A004	E 300UF, 220V	1	
	C16417	F2A2T301A004	E 300UF, 220V	1	
	C16421	F1L2J562A022	C 5600UF, K,6.3V	1	
	C16441	F1H1H392A970	C 3900PF, K, 50V	1	
	C16451	F1H1H392A970	C 3900PF, K, 50V	1	
	C16460	F1E2J222A002	C 2200PF, 600V	1	
	C16461	F1L2J1020001	C 1000UF, K,6.3V	1	
	C16471	F1L2J1020001	C 1000UF, K,6.3V	1	
	C16472	F1K1E105A029	C 1UF, Z, 25V	1	
	C16481	F1L2J1020001	C 1000UF, K,6.3V	1	
	C16490	F1H1C105A145	C 0.01UF, K, 16V	1	
	C16491	F1L2J1020001	C 1000UF, K,6.3V	1	
	C16501	F1K1E105A029	C 1UF, Z, 25V	1	
	C16502	F1K1E475A134	C 4.7UF, Z, 25V	1	
	C16503	F2A1E471A102	E 470UF, 25V	1	
	C16504	F1K1E475A134	C 4.7UF, Z, 25V	1	
	C16505	F1K1E105A029	C 1UF, Z, 25V	1	
	C16521	F1K1E105A029	C 1UF, Z, 25V	1	
	C16522	F1K1E475A134	C 4.7UF, Z, 25V	1	
	C16523	F2A1E471A102	E 470UF, 25V	1	
	C16524	F1K1E475A134	C 4.7UF, Z, 25V	1	
	C16525	F1K1E475A134	C 4.7UF, Z, 25V	1	
	C16534	F1K1E105A029	C 1UF, Z, 25V	1	
	C16561	F1J1A106A087	C 0.010UF, K, 10V	1	
	C16562	F1H1C105A145	C 0.01UF, K, 16V	1	
	C16564	F1H1C105A145	C 0.01UF, K, 16V	1	
	C16565	F1H1H103A970	C 0.001UF, K, 50V	1	
	C16566	F1H1H103A970	C 0.001UF, K, 50V	1	
	C16581	F1K1E105A029	C 1UF, Z, 25V	1	
	C16582	F1H1C105A145	C 0.01UF, K, 16V	1	
	C16593	F1H1H102A971	C 1000PF, K, 50V	1	
	C16602	F1H1H220A971	C 22PF, K, 50V	1	
	C16603	F1K2J102A014	C 1000UF, K,6.3V	1	
	C16604	F1K2J102A014	C 1000UF, K,6.3V	1	
	C16608	F1H1H221A971	C 220UF, K, 50V	1	
	C16632	F0C2E405A252	E 0.040UF, 250V	1	
	C16633	F0C2E405A252	E 0.040UF, 250V	1	
	C16641	F1K2J222A014	C 2200UF, K,6.3V	1	
	C16642	F1L2J562A022	C 5600UF, K,6.3V	1	
	C16645	F1K2J102A014	C 1000UF, K,6.3V	1	
	C16646	F1K2J102A014	C 1000UF, K,6.3V	1	
	C16661	F1K2J102A038	C 1000UF, K,6.3V	1	
	C16662	F1K2J102A038	C 1000UF, K,6.3V	1	
	C16664	F1H1H820A971	C 82UF, 50V	1	
	C16665	F1H1H820A971	C 82UF, 50V	1	

Safety	Ref. No.	Part No.	Part Name & Description	Pcs	Remarks
	C16666	F1H1H820A971	C 82UF, 50V	1	
	C16668	F1H1H221A971	C 220UF, K, 50V	1	
	C16675	F1H1H391A971	C 391UF, 50V	1	
	C16684	F1H1H104A970	C 0.1UF, K, 50V	1	
	C16685	F1H1H104A970	C 0.1UF, K, 50V	1	
	C16691	F2A2C101A097	E 1000UF, 160V	1	
	C16692	F1H1H104A970	C 0.1UF, K, 50V	1	
	C16707	F1H1H220A971	C 22PF, K, 50V	1	
	C16708	F1H1H104A970	C 0.1UF, K, 50V	1	
	C16721	F2A1H820A115	E 82UF, 50V	1	
	C16723	F1K1E105A029	C 1UF, Z, 25V	1	
	C16724	F1K1E475A134	C 4.7UF, Z, 25V	1	
	C16753	F1K1E475A134	C 4.7UF, Z, 25V	1	
	C16755	F1K1E475A134	C 4.7UF, Z, 25V	1	
	C16756	F1K1E475A134	C 4.7UF, Z, 25V	1	
	C16771	F1H1C105A145	C 0.01UF, K, 16V	1	
	C16773	F1K1E105A029	C 1UF, Z, 25V	1	
	C16791	EEUFC1E221	E 220UF, 25V	1	
	C16793	EEUFC1E221	E 220UF, 25V	1	
	C16794	F1J1A106A087	C 0.010UF, K, 10V	1	
	C16795	F2A1E471A102	E 470UF, 25V	1	
	C16796	F2A1E471A102	E 470UF, 25V	1	
	C16797	F1H1H104A970	C 0.1UF, K, 50V	1	
	C16813	F2A2T221A009	E 220UF, 220V	1	
	C16842	F2A2C101A097	E 1000UF, 160V	1	
	C16843	F1J1H104A835	C 0.10UF, 50V	1	
	C16844	F1J1H104A835	C 0.10UF, 50V	1	
	C16854	F1J1H104A835	C 0.10UF, 50V	1	
	C16856	ECJ1VB1A105K	C 0.01UF, Z, 10V	1	
	C16857	F1H1C104A143	C 0.1UF, K, 16V	1	
	C16858	ECJ1VB1A105K	C 0.01UF, Z, 10V	1	
	C16859	F1J1H104A835	C 0.10UF, 50V	1	
	C16860	ECJ1VB1A105K	C 0.01UF, Z, 10V	1	
	C16861	F1H1C104A143	C 0.1UF, K, 16V	1	
	C16862	ECJ1VB1A105K	C 0.01UF, Z, 10V	1	
	C16863	F1J1H104A835	C 0.10UF, 50V	1	
	C16864	F1J1H104A835	C 0.10UF, 50V	1	
	C16891	F1K1E105A029	C 1UF, Z, 25V	1	
	C16902	F1E2J332A002	C 3300PF, 600V	1	
	C17101	F1L2A334A034	E 3300UF, 100V	1	PAVCSG
	C17103	F1H1C104A143	C 0.1UF, K, 16V	1	
	C17104	ECJ1VB1A105K	C 0.01UF, Z, 10V	1	
	C17105	F1L2A334A034	E 3300UF, 100V	1	PAVCSG
	C17107	ECJ1VB1A105K	C 0.01UF, Z, 10V	1	
	C17109	F1L2A334A034	E 3300UF, 100V	1	PAVCSG
	C17110	ECJ1VB1A105K	C 0.01UF, Z, 10V	1	
	C17111	F1L2A334A034	E 3300UF, 100V	1	PAVCSG
	C17113	ECJ1VB1A105K	C 0.01UF, Z, 10V	1	
	C17115	F1L2A334A034	E 3300UF, 100V	1	PAVCSG
	C17116	ECJ1VB1A105K	C 0.01UF, Z, 10V	1	
	C17117	F1L2A334A034	E 3300UF, 100V	1	PAVCSG
	C17119	ECJ1VB1A105K	C 0.01UF, Z, 10V	1	
	C17120	F1L2A334A034	E 3300UF, 100V	1	PAVCSG
	C17122	ECJ1VB1A105K	C 0.01UF, Z, 10V	1	
	C17123	F1L2A334A034	E 3300UF, 100V	1	PAVCSG
	C17125	ECJ1VB1A105K	C 0.01UF, Z, 10V	1	
	C17141	F1H1H101A971	C 100UF, 50V	1	
	C17202	F1H1C104A143	C 0.1UF, K, 16V	1	
	C17203	F1H1C104A143	C 0.1UF, K, 16V	1	
	C17205	F1L2A334A034	E 3300UF, 100V	1	PAVCSG
	C17206	ECJ1VB1A105K	C 0.01UF, Z, 10V	1	
	C17207	F1L2A334A034	E 3300UF, 100V	1	PAVCSG
	C17209	ECJ1VB1A105K	C 0.01UF, Z, 10V	1	
	C17210	F1L2A334A034	E 3300UF, 100V	1	PAVCSG
	C17212	ECJ1VB1A105K	C 0.01UF, Z, 10V	1	
	C17213	F1L2A334A034	E 3300UF, 100V	1	PAVCSG
	C17215	ECJ1VB1A105K	C 0.01UF, Z, 10V	1	
	C17217	F1L2A334A034	E 3300UF, 100V	1	PAVCSG
	C17218	ECJ1VB1A105K	C 0.01UF, Z, 10V	1	
	C17219	F1L2A334A034	E 3300UF, 100V	1	PAVCSG
	C17221	ECJ1VB1A105K	C 0.01UF, Z, 10V	1	
	C17223	F1L2A334A034	E 3300UF, 100V	1	PAVCSG

Safety	Ref. No.	Part No.	Part Name & Description	Pcs	Remarks
	C17224	ECJ1VB1A105K	C 0.01UF, Z, 10V	1	
	C17241	F1H1H101A971	C 100UF, 50V	1	
	CB1	K1MY55B00002	55P CONNECTOR	1	
	CB2	K1MY55B00002	55P CONNECTOR	1	
	CB3	K1MY55B00002	55P CONNECTOR	1	
	CB4	K1MY55B00002	55P CONNECTOR	1	
	CB5	K1MY55B00002	55P CONNECTOR	1	
	CB6	K1MY55B00002	55P CONNECTOR	1	
	CB7	K1MY55B00002	55P CONNECTOR	1	
	CB8	K1MY55B00002	55P CONNECTOR	1	
	CB9	K1MY55B00002	55P CONNECTOR	1	
	CB10	K1MY55B00002	55P CONNECTOR	1	
	CB11	K1MY55B00002	55P CONNECTOR	1	
	CB12	K1MY55B00002	55P CONNECTOR	1	
	CB13	K1MY55B00002	55P CONNECTOR	1	
	CB14	K1MY55B00002	55P CONNECTOR	1	
	CB15	K1MY55B00002	55P CONNECTOR	1	
	CN0102	K1KA11A00178	11P CONNECTOR	1	
	D1101	B0JCCE000008	DIODE	1	
	D2014	B0ACCJ000048	DIODE	1	
	D2520	B3AGB0000060	LED	1	PAVCSG
	D2870	B0JCME000092	DIODE	1	
	D3105	DZ2J140M0L	ZENER DIODE	1	PAVCSG
	D3106	DZ2J140M0L	ZENER DIODE	1	PAVCSG
	D3107	DZ2J140M0L	ZENER DIODE	1	PAVCSG
	D3108	DZ2J140M0L	ZENER DIODE	1	PAVCSG
	D3109	DZ2J140M0L	ZENER DIODE	1	PAVCSG
	D4702	B0ACCJ000048	DIODE	1	
	D4704	B0JCCE000008	DIODE	1	
	D4719	B0ACCJ000048	DIODE	1	
	D4721	B0JCCE000008	DIODE	1	
	D4735	B0ACCJ000048	DIODE	1	
	D4737	B0JCCE000008	DIODE	1	
	D5000	B0ADCJ000100	DIODE	1	
	D5051	B0JCME000076	DIODE	1	
	D5052	B0ACCJ000048	DIODE	1	
	D5100	B0ADEJ000035	ZENER DIODE	1	
	D5471	B0ACCJ000048	DIODE	1	
	D5472	B0ADEJ000035	ZENER DIODE	1	
	D5475	B0ADCJ000100	DIODE	1	
	D5476	DZ2J068M0L	ZENER DIODE	1	PAVCSG
	D5477	DZ2J068M0L	ZENER DIODE	1	PAVCSG
	D5478	B0ADCJ000100	DIODE	1	
	D5479	B0ADCJ000100	DIODE	1	
	D5480	B0ADCJ000100	DIODE	1	
	D5481	DZ2J120M0L	ZENER DIODE	1	
	D5482	DZ2J120M0L	ZENER DIODE	1	
	D5483	DZ2J068M0L	ZENER DIODE	1	PAVCSG
	D5484	DZ2J068M0L	ZENER DIODE	1	PAVCSG
	D5485	DZ2J068M0L	ZENER DIODE	1	PAVCSG
	D5486	DZ2J068M0L	ZENER DIODE	1	PAVCSG
	D5602	DZ2J056M0L	ZENER DIODE	1	
	D5605	B0HCMM000014	DIODE	1	
	D9804	B0JCPG000030	DIODE	1	
	D9805	B0JCPG000030	DIODE	1	
	D9806	B0ADCJ000100	DIODE	1	
	D9807	B0ADCJ000100	DIODE	1	
	D16001	B0FCCN000003	DIODE	1	PAVCSG
	D16021	B0FCCN000003	DIODE	1	PAVCSG
	D16022	B0FCCN000003	DIODE	1	PAVCSG
	D16032	B0ACCJ000048	DIODE	1	
	D16041	B0FCCP000001	DIODE	1	
	D16050	B0ECKP000055	DIODE	1	
	D16051	B0FCCN000002	DIODE	1	
	D16101	B0JCME000093	DIODE	1	
	D16131	B0ECKP000055	DIODE	1	
	D16151	B0ECKP000055	DIODE	1	
	D16152	B0ECKP000055	DIODE	1	
	D16153	B0ECKP000055	DIODE	1	
	D16191	B0ECKP000055	DIODE	1	

Safety	Ref. No.	Part No.	Part Name & Description	Pcs	Remarks
	D16192	B0ACCJ000048	DIODE	1	
	D16196	DZ2J200M0L	ZENER DIODE	1	
	D16253	B3ABB0000210	LED	1	
	D16255	B0ACCJ000048	DIODE	1	
	D16280	B0ACCJ000048	DIODE	1	
	D16281	DZ2J051M0L	ZENER DIODE	1	
	D16282	DZ2J068M0L	ZENER DIODE	1	PAVCSG
	D16285	B0ADEJ000035	ZENER DIODE	1	
	D16286	B0ACCJ000048	DIODE	1	
	D16315	DZ2J150M0L	ZENER DIODE	1	
	D16316	B0ECKP000055	DIODE	1	
	D16317	B0ECKP000055	DIODE	1	
	D16401	DA3DF50ACSLW	ZENER DIODE	1	
	D16402	DA3DF50ACSLW	ZENER DIODE	1	
	D16407	B0JCME000093	DIODE	1	
	D16411	B0ACCJ000048	DIODE	1	
	D16422	B0FACP000005	DIODE	1	
	D16451	B0ECKP000055	DIODE	1	
	D16461	B0FACP000005	DIODE	1	
	D16466	B0ACCJ000048	DIODE	1	
	D16473	B0ACCJ000048	DIODE	1	
	D16474	B0ACCJ000048	DIODE	1	
	D16475	DZ2J051M0L	ZENER DIODE	1	
	D16476	B0ACCJ000048	DIODE	1	
	D16477	DZ2J047L0L	ZENER DIODE	1	
	D16478	B0ACCJ000048	DIODE	1	
	D16480	B0ACCJ000048	DIODE	1	
	D16482	B0FACP000005	DIODE	1	
	D16490	B0ECKP000055	DIODE	1	
	D16491	B0ECKP000055	DIODE	1	
	D16492	DZ2J047M0L	ZENER DIODE	1	
	D16493	B0ADCJ000100	DIODE	1	
	D16494	B0ADCJ000100	DIODE	1	
	D16497	B0ECKP000055	DIODE	1	
	D16503	B0ECHR000001	DIODE	1	
	D16522	B0ECHR000001	DIODE	1	
	D16523	B0ECHR000001	DIODE	1	
	D16534	B0ECHR000001	DIODE	1	
	D16536	B0ECHR000001	DIODE	1	
	D16583	B3ABB0000210	LED	1	
	D16602	DZ2J150M0L	ZENER DIODE	1	
	D16604	B0ADCJ000100	DIODE	1	
	D16605	DZ2J051L0L	ZENER DIODE	1	
	D16607	B0ACCJ000048	DIODE	1	
	D16610	B0ACCJ000048	DIODE	1	
	D16618	B0ECKP000055	DIODE	1	
	D16641	B0FBCN000006	DIODE	1	
	D16642	B0FBCN000006	DIODE	1	
	D16645	DZ2J150M0L	ZENER DIODE	1	
	D16646	DZ2J150M0L	ZENER DIODE	1	
	D16647	DZ2J150M0L	ZENER DIODE	1	
	D16648	DZ2J051L0L	ZENER DIODE	1	
	D16649	B0ACCJ000048	DIODE	1	
	D16650	B0ACCJ000048	DIODE	1	
	D16651	DZ2J051M0L	ZENER DIODE	1	
	D16652	B0ECKP000055	DIODE	1	
	D16653	B0ACCJ000048	DIODE	1	
	D16654	B0ACCJ000048	DIODE	1	
	D16662	DZ2J150M0L	ZENER DIODE	1	
	D16663	DZ2J150M0L	ZENER DIODE	1	
	D16664	DZ2J150M0L	ZENER DIODE	1	
	D16669	B0ACCJ000048	DIODE	1	
	D16671	B0ACCJ000048	DIODE	1	
	D16673	B0ECHR000001	DIODE	1	
	D16674	B0ECHR000001	DIODE	1	
	D16677	B0ADEJ000035	ZENER DIODE	1	
	D16678	DZ2J15000L	ZENER DIODE	1	
	D16702	B0ACCJ000048	DIODE	1	
	D16710	DZ2J15000L	ZENER DIODE	1	
	D16711	B0ECHR000001	DIODE	1	
	D16712	DZ2J15000L	ZENER DIODE	1	
	D16713	B0ECHR000001	DIODE	1	
	D16719	B0ECKP000055	DIODE	1	

Safety	Ref. No.	Part No.	Part Name & Description	Pcs	Remarks
	D16720	B0ECKP000055	DIODE	1	
	D16721	B0ECHR000001	DIODE	1	
	D16728	B0ECKP000055	DIODE	1	
	D16765	B0ECKP000055	DIODE	1	
	D16790	B0JCME000093	DIODE	1	
	D16791	DZ2J200M0L	ZENER DIODE	1	
	D16792	B0ACCJ000048	DIODE	1	
	D16820	B0ACCJ000048	DIODE	1	
	D16821	DZ2J330M0L	ZENER DIODE	1	
	D16822	B0ADCJ000100	DIODE	1	
	D16824	DZ2J330M0L	ZENER DIODE	1	
	D16825	DZ2J330M0L	ZENER DIODE	1	
	D16859	B0HCKS000002	DIODE	1	
	D16871	DZ2J240M0L	ZENER DIODE	1	
	D16872	DZ2J200M0L	ZENER DIODE	1	
	D16874	DZ2J051M0L	ZENER DIODE	1	
	D16875	B0ACCJ000048	DIODE	1	
	D16893	DZ2J056H0L	ZENER DIODE	1	
	D16901	B0ADCJ000100	DIODE	1	
	D16902	B0ACCJ000048	DIODE	1	
	D16920	B0ADCJ000100	DIODE	1	
	IC1000	C1ZBZ0003775	IC	1	
	IC1100	TVRR555	IC	1	PAVCSG
	IC2301	C1AB00003230	IC	1	
	IC2870	C0DBAYY00462	IC	1	
	IC2952	C0DBGYY00281	IC	1	
	IC2953	C0DBFYY00049	IC	1	
	IC3000	C1AB00003218	IC	1	
	IC3001	C0DBGYY00281	IC	1	
	IC5000	C1ZBZ0004161	IC	1	
	IC5401	C0DBGYY00884	IC	1	
	IC5600	C0DBAYY00715	IC	1	
	IC5601	C0DBAYY00715	IC	1	
	IC5603	C0DBFYY00049	IC	1	
	IC5604	C0DBGYY00578	IC	1	
	IC8001	MN2WS0125FE	IC	1	PAVCSG
	IC8921	TVRR587	IC	1	PAVCSG
	IC8950	TVRR524	IC	1	PAVCSG K
	IC8950	TVRR526	IC	1	PAVCSG M/V
	IC8950	TVRR527	IC	1	PAVCSG P
	IC9300	C1AB00003259	IC	1	PAVCSG
	IC9304	TVRR401	IC	1	PAVCSG
	IC9400	C0JBAZ002692	IC	1	
	IC9401	C0JBAZ002692	IC	1	
	IC9402	C0JBAZ002692	IC	1	
	IC9800	C0DBAYY00605	IC	1	
	IC9801	C0DBAYY00462	IC	1	
	IC9803	C0DBAYY00462	IC	1	
	IC16131	C0ZBZ0001707	IC	1	
	IC16151	C0ZBZ0001708	IC	1	
	IC16241	C0JBAU000088	C0JBAU000043	1	PAVCSG
	IC16251	C0BBBA000024	IC	1	
	IC16304	MIP3900MSSCF	IC	1	
	IC16312	C0DBZMC00006	IC	1	
	IC16471	C0DBEYY00114	IC	1	
	IC16490	C0DBZMC00006	IC	1	
	IC16491	NJM2406F	LINEAR IC	1	
	IC16501	C0ZBZ0001708	IC	1	
	IC16521	C0ZBZ0001708	IC	1	
	IC16561	C0JBAU000088	C0JBAU000043	1	PAVCSG
	IC16562	C0JBAU000088	C0JBAU000043	1	PAVCSG
	IC16563	C0JBAB000916	IC	1	
	IC16581	C0BBBA000024	IC	1	
	IC16661	C0BBBA000024	IC	1	
	IC16691	C0JBAC000363	IC	1	
	IC16692	C0DBZYY00352	IC	1	
	IC16724	C0CBADE00049	IC	1	
	IC16771	C0CBADC00072	IC	1	
	IC16773	C0JBAB000715	IC	1	
	IC16784	MIP3910MSSCF	IC	1	

Safety	Ref. No.	Part No.	Part Name & Description	Pcs	Remarks
	IC16785	C0DBZYY00352	IC	1	
	IC16786	MIP3910MSSCF	IC	1	
	IC16787	C0DBZYY00352	IC	1	
	IC16792	NJM2406F	LINEAR IC	1	
	IC16793	C0DBZMC00006	IC	1	
	IC16920	C0BBBA000024	IC	1	
	IC17101	C0JBAU000088	C0JBAU000043	1	PAVCSG
	IC17201	C0JBAU000088	C0JBAU000043	1	PAVCSG
	IC17202	C0JBAZ002692	IC	1	
	JK3100A	K2HA917A0001	JACK	1	PAVCSG
	JK3107	K4AK13B00006	TERMINAL BOARD	1	PAVCSG
	JK3304	K1FY315A0008	CONNECTOR	1	PAVCSG
	JK4700	K1FY119D0011	CONNECTOR	1	PAVCSG
	JK4701	K1FY119D0011	CONNECTOR	1	PAVCSG
	JK4702	K1FY119E0015	CONNECTOR	1	PAVCSG
	JK8850	K1NA12E00017	12P CONNECTOR	1	
	K1	K1KA08B00270	8P CONNECTOR	1	
	L2301	J0JHC0000042	CHIP INDUCTOR	1	
	L2302	G1C3R0ZA0156	INDUCTION COIL	1	
	L2303	G1C220MA0416	INDUCTION COIL	1	
	L2304	G1C220MA0416	INDUCTION COIL	1	
	L2305	G1C220MA0416	INDUCTION COIL	1	
	L2306	G1C220MA0416	INDUCTION COIL	1	
	L2870	G1C101MA0416	INDUCTION COIL	1	PAVCSG
	L2871	J0JHC0000075	CHIP INDUCTOR	1	
	L2904	J0JCC0000278	CHIP INDUCTOR	1	
	L2909	J0JCC0000278	CHIP INDUCTOR	1	
	L2910	J0JCC0000278	CHIP INDUCTOR	1	
	L3100	J0JYC0000331	CHIP INDUCTOR	1	PAVCSG
	L3101	J0JYC0000331	CHIP INDUCTOR	1	PAVCSG
	L3102	J0JYC0000331	CHIP INDUCTOR	1	PAVCSG
	L3103	J0JYC0000331	CHIP INDUCTOR	1	PAVCSG
	L3104	J0JYC0000331	CHIP INDUCTOR	1	PAVCSG
	L3107	J0JYC0000331	CHIP INDUCTOR	1	PAVCSG
	L3114	J0JYC0000331	CHIP INDUCTOR	1	PAVCSG
	L3115	J0JYC0000331	CHIP INDUCTOR	1	PAVCSG
	L3117	J0JYC0000331	CHIP INDUCTOR	1	PAVCSG
	L3118	J0JYC0000331	CHIP INDUCTOR	1	PAVCSG
	L3119	J0JYC0000331	CHIP INDUCTOR	1	PAVCSG
	L3120	J0JYC0000331	CHIP INDUCTOR	1	PAVCSG
	L3121	J0JYC0000331	CHIP INDUCTOR	1	PAVCSG
	L4700	J0JYC0000068	CHIP INDUCTOR	1	
	L4701	J0JYC0000068	CHIP INDUCTOR	1	
	L4702	J0JYC0000068	CHIP INDUCTOR	1	
	L4703	J0JYC0000068	CHIP INDUCTOR	1	
	L4704	J0JYC0000068	CHIP INDUCTOR	1	
	L4705	J0JYC0000068	CHIP INDUCTOR	1	
	L4706	J0JYC0000068	CHIP INDUCTOR	1	
	L4707	J0JYC0000068	CHIP INDUCTOR	1	
	L4708	J0JYC0000068	CHIP INDUCTOR	1	
	L5000	J0JYC0000068	CHIP INDUCTOR	1	
	L5600	G1C2R2Z00006	INDUCTION COIL	1	
	L5601	G1C3R3Z00004	INDUCTION COIL	1	
	L5602	G1C100MA0077	INDUCTION COIL	1	
	L5603	J0JHC0000075	CHIP INDUCTOR	1	
	L5604	G1C3R3Z00005	INDUCTION COIL	1	
	L5605	G1C4R7Z00014	INDUCTION COIL	1	
	L5606	G1C100MA0077	INDUCTION COIL	1	
	L5608	J0JHC0000045	CHIP INDUCTOR	1	
	L8000	J0JHC0000045	CHIP INDUCTOR	1	
	L8001	J0JHC0000116	CHIP INDUCTOR	1	
	L8002	J0JKC0000021	CHIP INDUCTOR	1	
	L8003	J0JKC0000021	CHIP INDUCTOR	1	
	L8004	J0JHC0000045	CHIP INDUCTOR	1	
	L8005	J0JKC0000021	CHIP INDUCTOR	1	
	L8007	J0JHC0000045	CHIP INDUCTOR	1	
	L8008	J0JHC0000045	CHIP INDUCTOR	1	
	L8009	J0JHC0000045	CHIP INDUCTOR	1	
	L8010	J0JHC0000045	CHIP INDUCTOR	1	
	L8011	J0JHC0000045	CHIP INDUCTOR	1	

Safety	Ref. No.	Part No.	Part Name & Description	Pcs	Remarks
	L8012	J0JHC0000045	CHIP INDUCTOR	1	
	L8013	J0JHC0000045	CHIP INDUCTOR	1	
	L8014	J0JHC0000045	CHIP INDUCTOR	1	
	L8015	J0JHC0000045	CHIP INDUCTOR	1	
	L8016	J0JHC0000045	CHIP INDUCTOR	1	
	L8017	J0JHC0000045	CHIP INDUCTOR	1	
	L8018	J0JHC0000045	CHIP INDUCTOR	1	
	L8019	J0JHC0000045	CHIP INDUCTOR	1	
	L8020	J0JHC0000045	CHIP INDUCTOR	1	
	L8021	J0JHC0000045	CHIP INDUCTOR	1	
	L8022	J0JHC0000045	CHIP INDUCTOR	1	
	L8023	J0JHC0000045	CHIP INDUCTOR	1	
	L8024	J0JHC0000045	CHIP INDUCTOR	1	
	L8025	J0JHC0000045	CHIP INDUCTOR	1	
	L8850	J0JHC0000045	CHIP INDUCTOR	1	
	L8920	J0JHC0000075	CHIP INDUCTOR	1	
	L9300	J0JHC0000117	CHIP INDUCTOR	1	
	L9301	J0JHC0000117	CHIP INDUCTOR	1	
	L9302	J0JHC0000117	CHIP INDUCTOR	1	
	L9800	G1C6R8Z00010	INDUCTION COIL	1	
	L9801	G1C100MA0416	INDUCTION COIL	1	
	L9802	G1C100MA0416	INDUCTION COIL	1	
	L16001	G0CR82K00005	PEAKING COIL	1	PAVCSG
	L16003	G0CR82K00005	PEAKING COIL	1	PAVCSG
	L16011	G0CR82K00005	PEAKING COIL	1	PAVCSG
	L16013	G0CR82K00005	PEAKING COIL	1	PAVCSG
	L16303	G0C471MA0049	PEAKING COIL	1	PAVCSG
	L16402	G0CR82K00005	PEAKING COIL	1	PAVCSG
	L16403	G0CR82K00005	PEAKING COIL	1	PAVCSG
	L16412	G0CR82K00005	PEAKING COIL	1	PAVCSG
	L16413	G0CR82K00005	PEAKING COIL	1	PAVCSG
	L16472	G0ZZ00002183	PEAKING COIL	1	
	L16698	G0C681MA0065	PEAKING COIL	1	
	L16851	G0ZZ00002183	PEAKING COIL	1	
	PA5610	K5H4022A0031	FUSE	1	
	PC16191	B3PBA0000496	IC	1	
	PC16301	B3PBA0000498	IC	1	
	PC16461	B3PBE0000054	IC	1	
	PC16480	B3PBA0000498	IC	1	
	PC16603	B3PBA0000498	IC	1	
	PC16684	B3PBA0000496	IC	1	
	PC16685	B3PBA0000496	IC	1	
	PC16722	B3PBA0000498	IC	1	
	PC16723	B3PBA0000498	IC	1	
	PC16896	B3PBA0000498	IC	1	
	PC16897	B3PBA0000498	IC	1	
	Q2101	DSA200100L	TRANSISTOR	1	
	Q2109	DSA200100L	TRANSISTOR	1	
	Q2252	DSA200100L	TRANSISTOR	1	
	Q2253	B1AAFB000002	TRANSISTOR	1	PAVCSG
	Q2254	B1AAFB000002	TRANSISTOR	1	PAVCSG
	Q2255	DSC2001S0L	TRANSISTOR	1	
	Q2301	DSA200100L	TRANSISTOR	1	
	Q2510	DSC200100L	TRANSISTOR	1	
	Q2511	DSC200100L	TRANSISTOR	1	
	Q2512	DSC200100L	TRANSISTOR	1	
	Q2903	B1CBHD000002	FET	1	
	Q2904	B1CBHD000002	FET	1	
	Q3104	DSC200100L	TRANSISTOR	1	
	Q3105	DSC200100L	TRANSISTOR	1	
	Q4512	B1HFCFA00026	TRANSISTOR	1	
	Q4513	DSA200100L	TRANSISTOR	1	
	Q4700	DSC200100L	TRANSISTOR	1	
	Q4702	DSC200100L	TRANSISTOR	1	
	Q4704	DSC200100L	TRANSISTOR	1	
	Q5000	DSC200100L	TRANSISTOR	1	
	Q5051	DSA200100L	TRANSISTOR	1	
	Q5100	DSC2001S0L	TRANSISTOR	1	
	Q5101	DSC200100L	TRANSISTOR	1	
	Q5471	DSA200100L	TRANSISTOR	1	

Safety	Ref. No.	Part No.	Part Name & Description	Pcs	Remarks
	Q5472	DSC2001S0L	TRANSISTOR	1	
	Q5600	B1MBDDA00003	FET	1	
	Q5601	B1MBEDA00015	FET	1	
	Q5602	DSC2001S0L	TRANSISTOR	1	
	Q5603	DSC2001S0L	TRANSISTOR	1	
	Q5604	B1MBDDA00003	FET	1	
	Q5605	B1MBEDA00015	FET	1	
	Q9900	DSC200100L	TRANSISTOR	1	
	Q9901	DSC200100L	TRANSISTOR	1	
	Q16001	B1JBEN000002	TRANSISTOR	1	PAVCSG
	Q16002	B1JBEN000002	TRANSISTOR	1	PAVCSG
	Q16022	B1JBEN000002	TRANSISTOR	1	PAVCSG
	Q16023	B1JBEN000002	TRANSISTOR	1	PAVCSG
	Q16041	B1JBEN000003	TRANSISTOR	1	PAVCSG
	Q16051	B1JBEN000003	TRANSISTOR	1	PAVCSG
	Q16055	B1HFPFA00001	TRANSISTOR	1	
	Q16056	B1HFPFA00001	TRANSISTOR	1	
	Q16101	B1CFRM000008	FET	1	
	Q16102	B1CFRM000008	FET	1	
	Q16141	B1HFPFA00001	TRANSISTOR	1	
	Q16161	B1HFPFA00001	TRANSISTOR	1	
	Q16191	B1HFPFA00001	TRANSISTOR	1	
	Q16251	B1ABCF000231	TRANSISTOR	1	
	Q16280	B1ABCF000231	TRANSISTOR	1	
	Q16401	DG3D5020CSLW	TRANSISTOR	1	
	Q16402	DG3D5020CSLW	TRANSISTOR	1	
	Q16421	B1JAEP000014	TRANSISTOR	1	PAVCSG
	Q16422	B1JAEP000014	TRANSISTOR	1	PAVCSG
	Q16441	B1JAEP000013	TRANSISTOR	1	
	Q16451	B1JAEP000012	TRANSISTOR	1	
	Q16471	B1ABCF000231	TRANSISTOR	1	
	Q16490	B1CBGD000001	FET	1	
	Q16501	B1HFPFA00001	TRANSISTOR	1	
	Q16521	B1HFPFA00001	TRANSISTOR	1	
	Q16531	B1HFPFA00001	TRANSISTOR	1	
	Q16551	B1HFPFA00001	TRANSISTOR	1	
	Q16601	B1CERR000042	FET	1	
	Q16602	DSC2001Q0L	TRANSISTOR	1	
	Q16603	DSA2001S0L	TRANSISTOR	1	
	Q16606	DSC2001Q0L	TRANSISTOR	1	
	Q16607	B1CBGD000001	FET	1	
	Q16608	B1CBGD000001	FET	1	
	Q16621	B1JADN000005	TRANSISTOR	1	PAVCSG
	Q16645	DSC2001Q0L	TRANSISTOR	1	
	Q16646	DSA2001S0L	TRANSISTOR	1	
	Q16647	B1CBGD000001	FET	1	
	Q16649	B1ABCN000007	TRANSISTOR	1	
	Q16660	B1CERR000042	FET	1	
	Q16661	B1JAER000010	TRANSISTOR	1	
	Q16662	DSC2001Q0L	TRANSISTOR	1	
	Q16663	DSA2001S0L	TRANSISTOR	1	
	Q16668	DSC2001Q0L	TRANSISTOR	1	
	Q16670	B1ADCN000007	TRANSISTOR	1	
	Q16671	B1ABCF000231	TRANSISTOR	1	
	Q16675	B1ADCN000007	TRANSISTOR	1	
	Q16676	B1ABCF000231	TRANSISTOR	1	
	Q16677	DSC2001Q0L	TRANSISTOR	1	
	Q16678	B1ABCF000231	TRANSISTOR	1	
	Q16701	B1ADCN000007	TRANSISTOR	1	
	Q16702	B1ABCF000231	TRANSISTOR	1	
	Q16762	B1HFPFA00001	TRANSISTOR	1	
	Q16801	DSA2001S0L	TRANSISTOR	1	
	Q16810	B1ABCF000231	TRANSISTOR	1	
	Q16815	B1ABCN000007	TRANSISTOR	1	
	Q16816	DSC2001Q0L	TRANSISTOR	1	
	Q16817	DSC2001Q0L	TRANSISTOR	1	
	Q16818	B1CBGD000001	FET	1	
	Q16876	B1ABCF000231	TRANSISTOR	1	
	Q16885	B1CFNG000001	FET	1	
	Q16920	B1ABCN000007	TRANSISTOR	1	
	Q16921	B1ABCN000007	TRANSISTOR	1	
	Q16930	DSC2001Q0L	TRANSISTOR	1	
	Q16931	B1ABCN000007	TRANSISTOR	1	

Safety	Ref. No.	Part No.	Part Name & Description	Pcs	Remarks
	Q16932	DSC2001Q0L	TRANSISTOR	1	
	R0900	D0GA680JA015	M 68 OHM, J,0.063W	1	
	R0901	D0GA680JA015	M 68 OHM, J,0.063W	1	
	R0902	EXB28V680JX	RESISTOR ARRAY	1	
	R0903	D0GA680JA015	M 68 OHM, J,0.063W	1	
	R0905	ERJ2GEJ103	M 10KOHM, J,0.063W	1	
	R0910	ERJ2GEJ103	M 10KOHM, J,0.063W	1	
	R0911	ERJ2GEJ103	M 10KOHM, J,0.063W	1	
	R0912	ERJ2GEJ103	M 10KOHM, J,0.063W	1	
	R0913	ERJ2GEJ103	M 10KOHM, J,0.063W	1	
	R0940	D0GA680JA015	M 68 OHM, J,0.063W	1	
	R0941	D0GA680JA015	M 68 OHM, J,0.063W	1	
	R0942	D0GA680JA015	M 68 OHM, J,0.063W	1	
	R0943	D0GA680JA015	M 68 OHM, J,0.063W	1	
	R0944	D0GA680JA015	M 68 OHM, J,0.063W	1	
	R0945	D0GA680JA015	M 68 OHM, J,0.063W	1	
	R0948	D0GA222JA015	M 2.2KOHM, J,0.063W	1	
	R0949	D0GA222JA015	M 2.2KOHM, J,0.063W	1	
	R0957	ERJ2GEJ102X	M 1K OHM J 1/4W	1	
	R0966	D0GA472JA015	M 4.7KOHM, J,0.063W	1	
	R0967	D0GA472JA015	M 4.7KOHM, J,0.063W	1	
	R0980	D0GA472JA015	M 4.7KOHM, J,0.063W	1	
	R0981	D0GA472JA015	M 4.7KOHM, J,0.063W	1	
	R0982	ERJ2GEJ220	M 22 OHM, J,0.063W	1	
	R0983	ERJ2GEJ220	M 22 OHM, J,0.063W	1	
	R0984	D0GA472JA015	M 4.7KOHM, J,0.063W	1	
	R0985	D0GA472JA015	M 4.7KOHM, J,0.063W	1	
	R1179	D1BB7151A055	M7.15KOHM, 1/10W	1	
	R1180	ERJ2GEJ102X	M 1K OHM J 1/4W	1	
	R1181	D0GA473JA015	M 47KOHM, J,0.063W	1	
	R1183	D0GA472JA015	M 4.7KOHM, J,0.063W	1	
	R1185	D0GA101JA015	M 100 OHM, J,0.063W	1	
	R1186	D0GA473JA015	M 47KOHM, J,0.063W	1	
	R1187	D0GA273JA015	M 27K OHM J ,0.063W	1	
	R1503	D0GA473JA015	M 47KOHM, J,0.063W	1	
	R1518	D0GA683JA015	M 68KOHM, J,0.063W	1	
	R1519	D0GA473JA015	M 47KOHM, J,0.063W	1	
	R1520	ERJ2GEJ103	M 10KOHM, J,0.063W	1	
	R1521	ERJ2GEJ104	M 100KOHM, J,0.063W	1	
	R1552	D0GA472JA015	M 4.7KOHM, J,0.063W	1	
	R1562	D0GA473JA015	M 47KOHM, J,0.063W	1	
	R1563	D0GA473JA015	M 47KOHM, J,0.063W	1	

Safety	Ref. No.	Part No.	Part Name & Description	Pcs	Remarks
	R2053	D1BB1403A055	M 140KOHM, 1/10W	1	
	R2055	D1BB1403A055	M 140KOHM, 1/10W	1	
	R2069	ERJ2GEJ103	M 10KOHM, J,0.063W	1	
	R2070	ERJ2GEJ103	M 10KOHM, J,0.063W	1	
	R2101	D0GA332JA015	M 3.3KOHM, J,0.063W	1	
	R2102	D0GA472JA015	M 4.7KOHM, J,0.063W	1	
	R2103	ERJ2GEJ220	M 22 OHM, J,0.063W	1	
	R2104	D0GA122JA015	M 1.2KOHM, J,0.063W	1	
	R2107	D0GAR00Z0001	C 0 OHM, 0.063W	1	
	R2110	ERJ2GEJ220	M 22 OHM, J,0.063W	1	
	R2121	D0GA681JA015	M680 OHM, J,0.063W	1	
	R2135	ERJ2GEJ102X	M 1K OHM J 1/4W	1	
	R2139	ERJ2GEJ221	M 220 OHM, J,0.063W	1	
	R2254	D0GA101JA015	M 100 OHM, J,0.063W	1	
	R2255	D0GA473JA015	M 47KOHM, J,0.063W	1	
	R2256	ERJ2GEJ103	M 10KOHM, J,0.063W	1	
	R2257	D0GA105JA015	M 1M OHM, J,0.063W	1	
	R2258	D0GA101JA015	M 100 OHM, J,0.063W	1	
	R2259	D0GA101JA015	M 100 OHM, J,0.063W	1	
	R2260	ERJ2GEJ103	M 10KOHM, J,0.063W	1	
	R2263	ERJ2GEJ103	M 10KOHM, J,0.063W	1	
	R2264	D0GA101JA015	M 100 OHM, J,0.063W	1	
	R2301	ERJ2GEJ103	M 10KOHM, J,0.063W	1	
	R2302	EXB28V220J	RESISTOR ARRAY	1	
	R2304	D0GA473JA015	M 47KOHM, J,0.063W	1	
	R2307	D0GA472JA015	M 4.7KOHM, J,0.063W	1	
	R2308	ERJ2GEJ221	M 220 OHM, J,0.063W	1	
	R2309	D0GA222JA015	M 2.2KOHM, J,0.063W	1	
	R2310	D0GA222JA015	M 2.2KOHM, J,0.063W	1	
	R2318	ERJ8GEYJ3R3V	M 3.3 OHM, J,1/8W	1	
	R2319	ERJ8GEYJ3R3V	M 3.3 OHM, J,1/8W	1	
	R2320	ERJ8GEYJ3R3V	M 3.3 OHM, J,1/8W	1	
	R2321	ERJ8GEYJ3R3V	M 3.3 OHM, J,1/8W	1	
	R2510	ERJ3GEYJ470	M 47 OHM,J,1/16W	1	
	R2511	D0GB104JA041	M 100KOHM J 1/10W	1	
	R2512	D0GB224JA041	M 2.2KOHM,J,1/10W	1	
	R2513	ERJ3GEYJ223	M 22KOHM,J,1/16W	1	
	R2514	D0GB103JA057	M 10K OHM J 1/10W	1	
	R2515	D0GB473JA057	M 47KOHM,J,1/10W	1	
	R2516	D1BB6800A055	M 680 OHM, 1/10W	1	
	R2517	ERJ3GEYJ223	M 22KOHM,J,1/16W	1	
	R2518	D0GB473JA057	M 47KOHM,J,1/10W	1	
	R2519	D1BB1821A055	M1.82KOHM, 1/10W	1	
	R2750	D0GA101JA015	M 100 OHM, J,0.063W	1	
	R2753	D0GB103JA057	M 10K OHM J 1/10W	1	

Safety	Ref. No.	Part No.	Part Name & Description	Pcs	Remarks
	R2816	D0GA473JA015	M 47KOHM, J,0.063W	1	
	R2820	D0GA101JA015	M 100 OHM, J,0.063W	1	
	R2823	D0GA473JA015	M 47KOHM, J,0.063W	1	
	R2870	D0GA222JA015	M 2.2KOHM, J,0.063W	1	
	R2871	ERJ2GEJ103	M 10KOHM, J,0.063W	1	
	R2872	D1BA1501A014	M 1.5KOHM, 0.063W	1	PAVCSG
	R2873	D1BA1002A014	M 10KOHM, 0.063W	1	
	R2875	D0GA390JA015	M 39 OHM, J,0.063W	1	
	R2879	D1BA1803A014	M 18KOHM, 0.063W	1	
	R2880	D1BB1432A055	M14.3KOHM, 1/10W	1	
	R2881	D1BB6651A055	M6.65KOHM, 1/10W	1	
	R2882	D1BB7151A055	M7.15KOHM, 1/10W	1	
	R2883	D1BB1741A055	M 1.74KOHM, 1/16W	1	
	R2900	D0GB103JA057	M 10K OHM J 1/10W	1	
	R2901	D0GB103JA057	M 10K OHM J 1/10W	1	
	R2902	D0GAR00Z0001	C 0 OHM, 0.063W	1	
	R2903	D0GAR00Z0001	C 0 OHM, 0.063W	1	
	R2904	D0GAR00Z0001	C 0 OHM, 0.063W	1	
	R2905	D0GAR00Z0001	C 0 OHM, 0.063W	1	
	R2906	D0GAR00Z0001	C 0 OHM, 0.063W	1	
	R2908	D0GA682JA015	M6.8KOHM, J,0.063W	1	
	R2910	D0GBR00Z0002	M 0 OHM J 1/10W	1	
	R2911	ERJ2GEJ221	M 220 OHM, J,0.063W	1	
	R2918	D0GAR00Z0001	C 0 OHM, 0.063W	1	
	R2921	D0GA682JA015	M6.8KOHM, J,0.063W	1	
	R3012	ERJ2GEJ221	M 220 OHM, J,0.063W	1	
	R3013	ERJ2GEJ221	M 220 OHM, J,0.063W	1	
	R3014	ERJ2GEJ221	M 220 OHM, J,0.063W	1	
	R3101	D0GA472JA015	M 4.7KOHM, J,0.063W	1	
	R3102	D0GA472JA015	M 4.7KOHM, J,0.063W	1	
	R3103	ERJ6RED750	M 75 OHM, 1/10W	1	
	R3104	ERJ6RED750	M 75 OHM, 1/10W	1	
	R3105	ERJ6RED750	M 75 OHM, 1/10W	1	
	R3106	D0GA333JA015	M 33KOHM,J,0.063W	1	
	R3107	D0GA333JA015	M 33KOHM,J,0.063W	1	
	R3109	ERJ6RED750	M 75 OHM, 1/10W	1	
	R3117	ERJ2GEJ221	M 220 OHM, J,0.063W	1	
	R3119	D0GA473JA015	M 47KOHM, J,0.063W	1	
	R3120	EXB28V221J	RESISTOR ARRAY	1	
	R3123	EXB28V680JX	RESISTOR ARRAY	1	
	R3127	D0GA680JA015	M 68 OHM, J,0.063W	1	
	R3128	ERJ2GEJ104	M 100KOHM, J,0.063W	1	
	R3130	ERJ6RED750	M 75 OHM, 1/10W	1	
	R3144	ERJ6RED750	M 75 OHM, 1/10W	1	
	R3152	ERJ2GEJ221	M 220 OHM, J,0.063W	1	
	R3165	D0GA333JA015	M 33KOHM,J,0.063W	1	
	R3166	D0GA333JA015	M 33KOHM,J,0.063W	1	
	R3173	ERJ2GEJ221	M 220 OHM, J,0.063W	1	
	R3174	ERJ2GEJ221	M 220 OHM, J,0.063W	1	
	R3181	ERJ6RED750	M 75 OHM, 1/10W	1	

Safety	Ref. No.	Part No.	Part Name & Description	Pcs	Remarks
	R3182	ERJ6RED750	M 75 OHM, 1/10W	1	
	R3183	ERJ6RED750	M 75 OHM, 1/10W	1	
	R3184	ERJ2GEJ104	M 100KOHM, J,0.063W	1	
	R3185	ERJ2GEJ104	M 100KOHM, J,0.063W	1	
	R3186	D0GA333JA015	M 33KOHM,J,0.063W	1	
	R3187	D0GA333JA015	M 33KOHM,J,0.063W	1	
	R3190	D0GA222JA015	M 2.2KOHM, J,0.063W	1	
	R3191	D0GA222JA015	M 2.2KOHM, J,0.063W	1	
	R3192	EXB28V820JX	RESISTOR ARRAY	1	
	R3194	D0GA331JA015	M 330 OHM, J,0.063W	1	
	R3195	D0GA331JA015	M 330 OHM, J,0.063W	1	
	R3213	D0GA473JA015	M 47KOHM, J,0.063W	1	
	R3214	D0GA473JA015	M 47KOHM, J,0.063W	1	
	R3221	ERJ6RED750	M 75 OHM, 1/10W	1	
	R4003	D0GA473JA015	M 47KOHM, J,0.063W	1	
	R4004	D0GA473JA015	M 47KOHM, J,0.063W	1	
	R4005	D0GA473JA015	M 47KOHM, J,0.063W	1	
	R4006	D0GA473JA015	M 47KOHM, J,0.063W	1	
	R4011	D0GA473JA015	M 47KOHM, J,0.063W	1	
	R4548	ERJ2GEJ220	M 22 OHM, J,0.063W	1	
	R4549	D0GA151JA015	M 150 OHM, J,0.063W	1	
	R4550	D0GA151JA015	M 150 OHM, J,0.063W	1	
	R4551	D0GA151JA015	M 150 OHM, J,0.063W	1	
	R4552	D0GA560JA015	M 56 OHM, J,0.063W	1	
	R4553	ERJ2GEJ103	M 10KOHM, J,0.063W	1	
	R4554	ERJ2GEJ102X	M 1K OHM J 1/4W	1	
	R4556	ERJ2GEJ103	M 10KOHM, J,0.063W	1	
	R4560	D0GA473JA015	M 47KOHM, J,0.063W	1	
	R4655	ERJ2GEJ220	M 22 OHM, J,0.063W	1	
	R4659	ERJ2GEJ220	M 22 OHM, J,0.063W	1	
	R4663	ERJ2GEJ220	M 22 OHM, J,0.063W	1	
	R4668	D0GA330JA015	M 33 OHM, J,0.063W	1	
	R4670	D0GA330JA015	M 33 OHM, J,0.063W	1	
	R4672	D0GA330JA015	M 33 OHM, J,0.063W	1	
	R4702	ERJ2GEJ103	M 10KOHM, J,0.063W	1	
	R4703	D0GA330JA015	M 33 OHM, J,0.063W	1	
	R4704	D0GA473JA015	M 47KOHM, J,0.063W	1	
	R4708	ERJ2GEJ103	M 10KOHM, J,0.063W	1	
	R4709	ERJ2GEJ103	M 10KOHM, J,0.063W	1	
	R4711	ERJ2GEJ102X	M 1K OHM J 1/4W	1	
	R4712	D0GA473JA015	M 47KOHM, J,0.063W	1	
	R4715	ERJ2GEJ103	M 10KOHM, J,0.063W	1	
	R4716	D0GA330JA015	M 33 OHM, J,0.063W	1	

Safety	Ref. No.	Part No.	Part Name & Description	Pcs	Remarks
	R4717	D0GA473JA015	M 47KOHM, J,0.063W	1	
	R4721	ERJ2GEJ103	M 10KOHM, J,0.063W	1	
	R4722	ERJ2GEJ103	M 10KOHM, J,0.063W	1	
	R4724	ERJ2GEJ102X	M 1K OHM J 1/4W	1	
	R4725	D0GA473JA015	M 47KOHM, J,0.063W	1	
	R4728	ERJ2GEJ103	M 10KOHM, J,0.063W	1	
	R4729	D0GA330JA015	M 33 OHM, J,0.063W	1	
	R4730	D0GA473JA015	M 47KOHM, J,0.063W	1	
	R4734	ERJ2GEJ103	M 10KOHM, J,0.063W	1	
	R4735	ERJ2GEJ103	M 10KOHM, J,0.063W	1	
	R4737	ERJ2GEJ102X	M 1K OHM J 1/4W	1	
	R4738	D0GA473JA015	M 47KOHM, J,0.063W	1	
	R4739	ERJ2GEJ220	M 22 OHM, J,0.063W	1	
	R4752	D0GA680JA015	M 68 OHM, J,0.063W	1	
	R4753	D0GA680JA015	M 68 OHM, J,0.063W	1	
	R4754	D0GA680JA015	M 68 OHM, J,0.063W	1	
	R4755	D0GA680JA015	M 68 OHM, J,0.063W	1	
	R4756	D0GA680JA015	M 68 OHM, J,0.063W	1	
	R4757	D0GA680JA015	M 68 OHM, J,0.063W	1	
	R4763	ERJ2GEJ104	M 100KOHM, J,0.063W	1	
	R4764	ERJ2GEJ104	M 100KOHM, J,0.063W	1	
	R4765	ERJ2GEJ104	M 100KOHM, J,0.063W	1	
	R5005	D0GA473JA015	M 47KOHM, J,0.063W	1	
	R5006	ERJ2GEJ103	M 10KOHM, J,0.063W	1	
	R5007	D0GA473JA015	M 47KOHM, J,0.063W	1	
	R5008	D0GA822JA015	M8.2KOHM, J,0.063W	1	
	R5050	D0GA473JA015	M 47KOHM, J,0.063W	1	
	R5051	D0GA473JA015	M 47KOHM, J,0.063W	1	
	R5052	D0GA105JA015	M 1M OHM, J,0.063W	1	
	R5061	ERJ6GEYJ150V	M 15 OHM,J,1/10W	1	
	R5065	ERJ2GEJ103	M 10KOHM, J,0.063W	1	
	R5100	D0GA273JA015	M 27K OHM J ,0.063W	1	
	R5101	ERJ2GEJ104	M 100KOHM, J,0.063W	1	
	R5102	ERJ2GEJ104	M 100KOHM, J,0.063W	1	
	R5103	D0GA683JA015	M 68KOHM, J,0.063W	1	
	R5104	D0GA473JA015	M 47KOHM, J,0.063W	1	
	R5106	D0GA683JA015	M 68KOHM, J,0.063W	1	
	R5110	D0GA101JA015	M 100 OHM, J,0.063W	1	
	R5151	D0GA101JA015	M 100 OHM, J,0.063W	1	
	R5152	D0GA222JA015	M 2.2KOHM, J,0.063W	1	
	R5153	D0GA101JA015	M 100 OHM, J,0.063W	1	

Safety	Ref. No.	Part No.	Part Name & Description	Pcs	Remarks
	R5154	D0GA470JA015	M 47 OHM, J,0.063W	1	
	R5155	D0GA101JA015	M 100 OHM, J,0.063W	1	
	R5471	D0GA222JA015	M 2.2KOHM, J,0.063W	1	
	R5472	D0GA332JA015	M 3.3KOHM, J,0.063W	1	
	R5473	ERJ2GEJ102X	M 1K OHM J 1/4W	1	
	R5474	ERJ2GEJ103	M 10KOHM, J,0.063W	1	
	R5475	ERJ6GEYJ221V	M 220 OHM,J,1/10W	1	
	R5479	ERJ6GEYJ471	M 470 OHM,J,1/10W	1	
	R5481	ERJ2GEJ221	M 220 OHM, J,0.063W	1	
	R5485	ERJ6GEYJ104V	M 100KOHM,J,1/10W	1	
	R5486	ERJ6GEYJ102V	M 1K OHM J 1/10W	1	
	R5487	ERJ6GEYJ472V	M 4.7K OHM J 1/10W	1	
	R5488	ERJ6GEYJ472V	M 4.7K OHM J 1/10W	1	
	R5489	ERJ6GEYJ472V	M 4.7K OHM J 1/10W	1	
	R5490	ERJ6GEYJ472V	M 4.7K OHM J 1/10W	1	
	R5491	ERJ6GEYJ472V	M 4.7K OHM J 1/10W	1	
	R5492	ERJ6GEYJ472V	M 4.7K OHM J 1/10W	1	
	R5493	ERJ6GEYJ472V	M 4.7K OHM J 1/10W	1	
	R5494	ERJ6GEYJ472V	M 4.7K OHM J 1/10W	1	
	R5600	D0GA680JA015	M 68 OHM, J,0.063W	1	
	R5601	D1BB8200A087	M 820 OHM, 1/10W	1	
	R5602	D1BB2701A087	M 2.7KOHM, 1/10W	1	
	R5603	D1BB1241A087	M1.24KOHM, 1/10W	1	
	R5604	D1BB2001A087	M 2KOHM, 1/10W	1	
	R5605	D1BB2002A055	M 20KOHM, 1/10W	1	
	R5606	D1BB2402A055	M 24KOHM, 1/10W	1	
	R5607	D0GA223JA015	M 22K OHM J 0.063W	1	
	R5608	D0GA683JA015	M 68KOHM, J,0.063W	1	
	R5609	ERJ2GEJ103	M 10KOHM, J,0.063W	1	
	R5610	D0GA473JA015	M 47KOHM, J,0.063W	1	
	R5611	D0GA222JA015	M 2.2KOHM, J,0.063W	1	
	R5612	ERJ2GEJ103	M 10KOHM, J,0.063W	1	
	R5613	D0GA473JA015	M 47KOHM, J,0.063W	1	
	R5616	D0GB100JA041	M 10 OHM J 1/10W	1	
	R5617	D0GB100JA041	M 10 OHM J 1/10W	1	
	R5618	D1BB3301A055	M 3.3KOHM, 1/10W	1	
	R5619	D1BB5601A055	M 5.6KOHM, 1/10W	1	
	R5620	D1BB1001A055	M 1KOHM, 1/10W	1	
	R5621	D1BB1001A055	M 1KOHM, 1/10W	1	
	R5622	D1BB2402A055	M 24KOHM, 1/10W	1	
	R5623	D1BB2202A055	M 22KOHM, 1/10W	1	
	R5626	D0GB100JA041	M 10 OHM J 1/10W	1	
	R5627	D0GB100JA041	M 10 OHM J 1/10W	1	
	R5640	ERJ2GEJ103	M 10KOHM, J,0.063W	1	
	R5641	ERJ2GEJ103	M 10KOHM, J,0.063W	1	
	R5642	ERJ2GEJ104	M 100KOHM, J,0.063W	1	
	R5643	ERJ2GEJ103	M 10KOHM, J,0.063W	1	
	R5644	D0GA752JA015	M7.5KOHM, J,0.063W	1	
	R8002	D1BB2402A055	M 24KOHM, 1/10W	1	

Safety	Ref. No.	Part No.	Part Name & Description	Pcs	Remarks
	R8003	D1BB1002A055	M 10KOHM, 1/10W	1	
	R8004	D1BB2402A055	M 24KOHM, 1/10W	1	
	R8005	D1BA1001A014	M 1KOHM, 0.063W	1	
	R8006	D1BA1001A014	M 1KOHM, 0.063W	1	
	R8007	D0GA111JA015	M 110 OHM, J,0.063W	1	
	R8008	ERJ2GEJ103	M 10KOHM, J,0.063W	1	
	R8009	D1BA56R0A014	M 56 OHM, 0.063W	1	
	R8010	D1BA3000A014	M 30 OHM. 0.063W	1	
	R8011	D0GB331JA041	M330 OHM J 1/10W	1	
	R8014	ERJ2GEJ103	M 10KOHM, J,0.063W	1	
	R8015	ERJ2GEJ102X	M 1K OHM J 1/4W	1	
	R8017	D0GA471JA015	M 470OHM, J,0.063W	1	
	R8031	D0GA222JA015	M 2.2KOHM, J,0.063W	1	
	R8032	ERJ2GEJ103	M 10KOHM, J,0.063W	1	
	R8211	ERJ2GEJ103	M 10KOHM, J,0.063W	1	
	R8212	ERJ2GEJ103	M 10KOHM, J,0.063W	1	
	R8396	ERJ2GEJ103	M 10KOHM, J,0.063W	1	
	R8470	ERJ2GEJ103	M 10KOHM, J,0.063W	1	
	R8488	D0GA680JA015	M 68 OHM, J,0.063W	1	
	R8489	D0GA680JA015	M 68 OHM, J,0.063W	1	
	R8490	D0GA680JA015	M 68 OHM, J,0.063W	1	
	R8491	D0GA680JA015	M 68 OHM, J,0.063W	1	
	R8492	D0GA680JA015	M 68 OHM, J,0.063W	1	
	R8493	D0GA680JA015	M 68 OHM, J,0.063W	1	
	R8494	D0GA680JA015	M 68 OHM, J,0.063W	1	
	R8495	D0GA680JA015	M 68 OHM, J,0.063W	1	
	R8496	D0GA680JA015	M 68 OHM, J,0.063W	1	
	R8497	D0GA680JA015	M 68 OHM, J,0.063W	1	
	R8499	D0GA680JA015	M 68 OHM, J,0.063W	1	
	R8500	EXB2HV103JV	RESISTOR ARRAY	1	
	R8511	EXB28V103JX	RESISTOR ARRAY	1	
	R8512	ERJ2GEJ103	M 10KOHM, J,0.063W	1	
	R8513	ERJ2GEJ103	M 10KOHM, J,0.063W	1	
	R8514	D0GA222JA015	M 2.2KOHM, J,0.063W	1	
	R8606	D0GA222JA015	M 2.2KOHM, J,0.063W	1	
	R8610	D0GA680JA015	M 68 OHM, J,0.063W	1	
	R8616	D0GA222JA015	M 2.2KOHM, J,0.063W	1	
	R8617	D0GA222JA015	M 2.2KOHM, J,0.063W	1	
	R8618	ERJ2GEJ103	M 10KOHM, J,0.063W	1	
	R8622	D0GA680JA015	M 68 OHM, J,0.063W	1	
	R8627	ERJ2GEJ103	M 10KOHM, J,0.063W	1	
	R8628	ERJ2GEJ103	M 10KOHM, J,0.063W	1	
	R8631	ERJ2GEJ103	M 10KOHM, J,0.063W	1	
	R8632	ERJ2GEJ103	M 10KOHM, J,0.063W	1	
	R8633	D0GA222JA015	M 2.2KOHM, J,0.063W	1	

Safety	Ref. No.	Part No.	Part Name & Description	Pcs	Remarks
	R8636	D0GA680JA015	M 68 OHM, J,0.063W	1	
	R8638	ERJ2GEJ103	M 10KOHM, J,0.063W	1	
	R8639	ERJ2GEJ103	M 10KOHM, J,0.063W	1	
	R8645	D0GA680JA015	M 68 OHM, J,0.063W	1	
	R8646	ERJ2GEJ103	M 10KOHM, J,0.063W	1	
	R8649	ERJ2GEJ103	M 10KOHM, J,0.063W	1	
	R8652	ERJ2GEJ103	M 10KOHM, J,0.063W	1	
	R8660	EXB2HV680J	RESISTOR ARRAY	1	
	R8661	D0GA222JA015	M 2.2KOHM, J,0.063W	1	
	R8664	ERJ2GEJ103	M 10KOHM, J,0.063W	1	
	R8669	ERJ2GEJ103	M 10KOHM, J,0.063W	1	
	R8671	D0GA222JA015	M 2.2KOHM, J,0.063W	1	
	R8733	D1BB1600A055	M 160 OHM, 1/10W	1	
	R8824	D1BA6201A014	M6.2KOHM, 0.063W	1	
	R8856	D0GA473JA015	M 47KOHM, J,0.063W	1	
	R8857	D0GA680JA015	M 68 OHM, J,0.063W	1	
	R8859	D0GA680JA015	M 68 OHM, J,0.063W	1	
	R8860	D0GA680JA015	M 68 OHM, J,0.063W	1	
	R8861	D0GA680JA015	M 68 OHM, J,0.063W	1	
	R8862	D0GA680JA015	M 68 OHM, J,0.063W	1	
	R8863	D0GA680JA015	M 68 OHM, J,0.063W	1	
	R8867	ERJ2GEJ103	M 10KOHM, J,0.063W	1	
	R8868	D0GA330JA015	M 33 OHM, J,0.063W	1	
	R8869	ERJ2GEJ103	M 10KOHM, J,0.063W	1	
	R8870	ERJ2GEJ103	M 10KOHM, J,0.063W	1	
	R8872	D0GA330JA015	M 33 OHM, J,0.063W	1	
	R8873	D0GA330JA015	M 33 OHM, J,0.063W	1	
	R8874	D0GA330JA015	M 33 OHM, J,0.063W	1	
	R8875	D0GA330JA015	M 33 OHM, J,0.063W	1	
	R8876	D0GA330JA015	M 33 OHM, J,0.063W	1	
	R8877	D0GA330JA015	M 33 OHM, J,0.063W	1	
	R8878	ERJ2GEJ103	M 10KOHM, J,0.063W	1	
	R8879	EXB28V103JX	RESISTOR ARRAY	1	
	R8890	ERJ2GEJ103	M 10KOHM, J,0.063W	1	
	R8900	D0GA680JA015	M 68 OHM, J,0.063W	1	
	R8918	EXB2HV680J	RESISTOR ARRAY	1	
	R8919	EXB2HV680J	RESISTOR ARRAY	1	
	R8920	D0GA222JA015	M 2.2KOHM, J,0.063W	1	
	R8922	EXB2HVR000	RESISTOR ARRAY	1	
	R8923	D0GA680JA015	M 68 OHM, J,0.063W	1	
	R8924	D0GA680JA015	M 68 OHM, J,0.063W	1	
	R8925	D0GA680JA015	M 68 OHM, J,0.063W	1	
	R8926	D0GA680JA015	M 68 OHM, J,0.063W	1	

Safety	Ref. No.	Part No.	Part Name & Description	Pcs	Remarks
	R8927	D0GA680JA015	M 68 OHM, J,0.063W	1	
	R8928	D0GA680JA015	M 68 OHM, J,0.063W	1	
	R8950	D0GA472JA015	M 4.7KOHM, J,0.063W	1	
	R9014	D1BB5601A055	M 5.6KOHM, 1/10W	1	
	R9016	D0GA2R2JA014	M 2.2OHM, J,0.063W	1	
	R9017	D1BB4701A055	M 4.7KOHM, 1/10W	1	
	R9019	D0GA2R2JA014	M 2.2OHM, J,0.063W	1	
	R9030	ERJ6GEYJ472V	M 4.7K OHM J 1/ 10W	1	
	R9031	ERJ6GEYJ331V	M 330 OHM J 1/ 10W	1	
	R9035	D0GA332JA015	M 3.3KOHM, J,0.063W	1	
	R9039	D0GA473JA015	M 47KOHM, J,0.063W	1	
	R9040	D0GA472JA015	M 4.7KOHM, J,0.063W	1	
	R9054	D0GAR00Z0001	C 0 OHM, 0.063W	1	
	R9058	D0GAR00Z0001	C 0 OHM, 0.063W	1	
	R9103	D0GA101JA015	M 100 OHM, J,0.063W	1	
	R9104	D0GA101JA015	M 100 OHM, J,0.063W	1	
	R9105	D0GA473JA015	M 47KOHM, J,0.063W	1	
	R9107	D0GA332JA015	M 3.3KOHM, J,0.063W	1	
	R9118	D0GAR00Z0001	C 0 OHM, 0.063W	1	
	R9120	D0GA101JA015	M 100 OHM, J,0.063W	1	
	R9145	D0GA101JA015	M 100 OHM, J,0.063W	1	
	R9190	D0GA101JA015	M 100 OHM, J,0.063W	1	
	R9191	D0GA101JA015	M 100 OHM, J,0.063W	1	
	R9198	EXB28V101JX	RESISTOR ARRAY	1	
	R9203	D0GA272JA015	M 2.7KOHM, J,0.063W	1	
	R9205	D0GA333JA015	M 33KOHM,J,0.063W	1	
	R9206	D0GA563JA015	M 56KOHM, J,0.063W	1	
	R9208	EXB2HV470JV	RESISTOR ARRAY	1	
	R9209	EXB2HV470JV	RESISTOR ARRAY	1	
	R9224	D0GA470JA015	M 47 OHM, J,0.063W	1	
	R9226	D0GA470JA015	M 47 OHM, J,0.063W	1	
	R9247	D0GA470JA015	M 47 OHM, J,0.063W	1	
	R9318	ERJ2GEJ102X	M 1K OHM J 1/4W	1	
	R9320	D0GA152JA015	M 1.5KOHM, J,0.063W	1	
	R9321	D0GA105JA015	M 1M OHM, J,0.063W	1	
	R9323	ERJ2GEJ102X	M 1K OHM J 1/4W	1	
	R9324	D0GB162JA041	N 1.6KOHM J 1/ 10W	1	
	R9325	D0GB162JA041	N 1.6KOHM J 1/ 10W	1	
	R9326	D0GB162JA041	N 1.6KOHM J 1/ 10W	1	
	R9327	D0GB162JA041	N 1.6KOHM J 1/ 10W	1	
	R9400	EXB2HV103JV	RESISTOR ARRAY	1	
	R9401	EXB2HV103JV	RESISTOR ARRAY	1	
	R9402	EXB28V103JX	RESISTOR ARRAY	1	
	R9608	EXB2HV470JV	RESISTOR ARRAY	1	
	R9609	EXB2HV470JV	RESISTOR ARRAY	1	
	R9610	EXB2HV470JV	RESISTOR ARRAY	1	
	R9872	D1BB3301A055	M 3.3KOHM, 1/10W	1	
	R9873	D1BB1002A055	M 10KOHM, 1/10W	1	
	R9874	D1BB2702A055	M 27KOHM, 1/10W	1	

Safety	Ref. No.	Part No.	Part Name & Description	Pcs	Remarks
	R9875	D1BB2002A055	M 20KOHM, 1/10W	1	
	R9877	D1BB4702A055	M 47KOHM, 1/10W	1	
	R9878	D1BB1002A055	M 10KOHM, 1/10W	1	
	R9879	D1BB1502A055	M 15KOHM, 1/10W	1	
	R9903	D0GA472JA015	M 4.7KOHM, J,0.063W	1	
	R9904	ERJ2GEJ104	M 100KOHM, J,0.063W	1	
	R9905	ERJ2GEJ103	M 10KOHM, J,0.063W	1	
	R9907	D0GA101JA015	M 100 OHM, J,0.063W	1	
	R9908	D1BB1202A055	M 12KOHM, 1/10W	1	
	R9909	D1BB2702A055	M 27KOHM, 1/10W	1	
	R9910	D1BB1002A055	M 10KOHM, 1/10W	1	
	R9920	D0GA390JA015	M 39 OHM, J,0.063W	1	
	R9921	D0GA390JA015	M 39 OHM, J,0.063W	1	
	R16001	D0GF7R5JA047	M 7.5 OHM,J, 0.33W	1	
	R16002	D0GF7R5JA047	M 7.5 OHM,J, 0.33W	1	
	R16022	D0GF7R5JA047	M 7.5 OHM,J, 0.33W	1	
	R16023	D0GF7R5JA047	M 7.5 OHM,J, 0.33W	1	
	R16031	ERJ6ENF8202	M 82KOHM, 1/10W	1	
	R16032	ERJ6ENF8202	M 82KOHM, 1/10W	1	
	R16033	ERJ6ENF5602	M 56KOHM, 1/10W	1	
	R16034	ERJ6ENF2702	M 27KOHM, 1/10W	1	
	R16041	D0GF5R6JA047	M 5.6 OHM,J, 0.33W	1	
	R16051	D0GF5R6JA047	M 5.6 OHM,J, 0.33W	1	
	R16101	D0GD221JA059	M 220 OHM,F,0.25W	1	
	R16102	D0GD221JA059	M 220 OHM,F,0.25W	1	
	R16103	D0GD100JA059	M 10 OHM,J,0.25W	1	
	R16104	D0GD100JA059	M 10 OHM,J,0.25W	1	
	R16105	ERJ8GEYJ474	M 470KOHM, J,1/ 8W	1	
	R16109	D0GD100JA059	M 10 OHM,J,0.25W	1	
	R16116	D0GB473JA057	M 47KOHM,J,1/10W	1	
	R16131	ERJ8GEYJ101V	M 100 OHM, J,1/ 8W	1	
	R16132	ERJ8GEYJ101V	M 100 OHM, J,1/ 8W	1	
	R16134	D0GD750JA059	M 75 OHM,J,0.25W	1	
	R16137	D0GF1R0JA047	M 1.0 OHM,J, 0.33W	1	
	R16141	D0GD100JA059	M 10 OHM,J,0.25W	1	
	R16143	D0GB473JA057	M 47KOHM,J,1/10W	1	
	R16151	ERJ3GEYJ101	M 100 OHM,J,1/ 16W	1	
	R16152	ERJ3GEYJ101	M 100 OHM,J,1/ 16W	1	
	R16154	D0GD750JA059	M 75 OHM,J,0.25W	1	
	R16155	D0GF1R0JA047	M 1.0 OHM,J, 0.33W	1	
	R16159	D0GF1R0JA047	M 1.0 OHM,J, 0.33W	1	
	R16161	D0GD100JA059	M 10 OHM,J,0.25W	1	
	R16163	D0GB473JA057	M 47KOHM,J,1/10W	1	
	R16171	D0GD100JA059	M 10 OHM,J,0.25W	1	
	R16173	D0GB473JA057	M 47KOHM,J,1/10W	1	
	R16181	D0GD100JA059	M 10 OHM,J,0.25W	1	
	R16183	D0GB473JA057	M 47KOHM,J,1/10W	1	
	R16191	ERJ6GEYJ151V	M 150 OHM,J,1/ 10W	1	
	R16192	D0GB103JA057	M 10K OHM J 1/ 10W	1	
	R16193	ERJ6GEYJ750	M 75 OHM,J,1/10W	1	
	R16195	D0GF1R0JA047	M 1.0 OHM,J, 0.33W	1	
	R16230	ERJ6GEYJ470V	M 47 OHM,J,1/10W	1	

Safety	Ref. No.	Part No.	Part Name & Description	Pcs	Remarks
	R16231	ERJ3GEYJ472	M 4.7KOHM,J,1/ 16W	1	
	R16241	EXB38V470J	RESISTOR ARRAY	1	
	R16242	EXB38V472JV	RESISTOR ARRAY	1	
	R16251	D1BB1401A055	M 1.4KOHM, 1/10W	1	
	R16252	ERJ6ENF3902	M 39KOHM, 1/10W	1	
	R16253	ERJ6ENF3902	M 39KOHM, 1/10W	1	
	R16254	ERJ6ENF6801	M 6.8KOHM, 1/10W	1	
	R16255	D1BB1201A055	M 1.2KOHM, 1/10W	1	
	R16256	D1BB1501A055	M1.50KOHM, 1/10W	1	
	R16257	D0GB273JA041	M 27K OHM J 1/ 10W	1	
	R16258	D0GB103JA057	M 10K OHM J 1/ 10W	1	
	R16260	ERJ6GEYJ222V	M 2.2K OHM J 1/ 10W	1	
	R16280	D0GB222JA041	M 2.2KOHM,J,1/ 10W	1	
	R16281	D0GB103JA057	M 10K OHM J 1/ 10W	1	
	R16282	ERJ6GEYJ221V	M 220 OHM,J,1/ 10W	1	
	R16283	D0GB473JA057	M 47KOHM,J,1/10W	1	
	R16284	D0GB224JA041	M 2.2KOHM,J,1/ 10W	1	
	R16285	EXB38V623J	RESISTOR ARRAY	1	
	R16288	D0GF334JA047	M 330KOHM,F,0.33W	1	
	R16289	D0GF334JA047	M 330KOHM,F,0.33W	1	
	R16290	D0GF334JA047	M 330KOHM,F,0.33W	1	
	R16307	ERJ6RBD6492	M64.9KOHM,F,1/ 10W	1	
	R16309	ERG1FJS333D	M 33KOHM, J, 1W	1	
	R16318	ERJ6RBD683	M 68KOHM,J,1/10W	1	
	R16319	ERJ6RBD2491	M 2.49KOHM, 1/ 10W	1	
	R16320	ERJ14YJ683	M 68KOHM, 1/2W	1	
	R16330	D0GB102JA041	M 1KOHM,J,1/10W	1	
	R16332	D0GB474JA041	M 470KOHM,J,1/ 10W	1	
	R16334	ERJ3GEYJ472	M 4.7KOHM,J,1/ 16W	1	
	R16335	D0GB102JA041	M 1KOHM,J,1/10W	1	
	R16401	D0GF7R5JA047	M 7.5 OHM,J, 0.33W	1	
	R16402	D0GF7R5JA047	M 7.5 OHM,J, 0.33W	1	
	R16410	D0GB391JA041	M 390 OHM,J,1/ 10W	1	
	R16411	ERJ6ENF2700	M 270 OHM, 1/10W	1	
	R16416	D0GB103JA057	M 10K OHM J 1/ 10W	1	
	R16417	ERJ6GEYJ101V	M 100 OHM,J,1/ 10W	1	
	R16418	ERJ6GEYJ101V	M 100 OHM,J,1/ 10W	1	
	R16421	D0GF7R5JA047	M 7.5 OHM,J, 0.33W	1	
	R16422	D0GF7R5JA047	M 7.5 OHM,J, 0.33W	1	
	R16441	D0GF5R6JA047	M 5.6 OHM,J, 0.33W	1	
	R16451	D0GF5R6JA047	M 5.6 OHM,J, 0.33W	1	
	R16465	ERJ6ENF2702	M 27KOHM, 1/10W	1	
	R16466	ERJ6ENF5602	M 56KOHM, 1/10W	1	
	R16467	ERJ6ENF8202	M 82KOHM, 1/10W	1	
	R16468	ERJ6ENF8202	M 82KOHM, 1/10W	1	
	R16471	D0GB392JA041	M 3.9KOHM,J,1/ 10W	1	
	R16472	D0GB222JA041	M 2.2KOHM,J,1/ 10W	1	
	R16473	ERJ6GEYF561	M 560 OHM,F,1/ 10W	1	
	R16474	D0GB102JA041	M 1KOHM,J,1/10W	1	
	R16475	ERJ3GEYJ472	M 4.7KOHM,J,1/ 16W	1	

Safety	Ref. No.	Part No.	Part Name & Description	Pcs	Remarks
	R16476	ERJ3GEYJ472	M 4.7KOHM,J,1/16W	1	
	R16478	D0GB562JA041	M 5.6KOHM,J,1/10W	1	
	R16479	ERJ6GEYJ103V	M 10K OHM J 1/10W	1	
	R16490	ERJ6RED124	M 120KOHM, 1/10W	1	
	R16491	ERJ6RED124	M 120KOHM, 1/10W	1	
	R16492	ERJ6RED124	M 120KOHM, 1/10W	1	
	R16493	ERJ6RBD6191	M 6.19KOHM, 1/10W	1	
	R16494	D1BB2001A055	M 2KOHM, 1/10W	1	
	R16495	ERJ6ENF7500	M 750 OHM, 1/10W	1	
	R16496	ERJ6GEYJ470V	M 47 OHM,J,1/10W	1	
	R16497	D0GB473JA057	M 47KOHM,J,1/10W	1	
	R16498	D0GB103JA057	M 10K OHM J 1/10W	1	
	R16503	D0GD100JA059	M 10 OHM,J,0.25W	1	
	R16504	D0GD750JA059	M 75 OHM,J,0.25W	1	
	R16506	D0GD100JA059	M 10 OHM,J,0.25W	1	
	R16509	D0GF1R0JA047	M 1.0 OHM,J, 0.33W	1	
	R16512	D0GB473JA057	M 47KOHM,J,1/10W	1	
	R16517	D0GB473JA057	M 47KOHM,J,1/10W	1	
	R16521	ERJ6GEYJ101V	M 100 OHM,J,1/10W	1	
	R16522	ERJ6GEYJ101V	M 100 OHM,J,1/10W	1	
	R16523	D0GD750JA059	M 75 OHM,J,0.25W	1	
	R16531	D0GD100JA059	M 10 OHM,J,0.25W	1	
	R16533	D0GB473JA057	M 47KOHM,J,1/10W	1	
	R16534	D0GF5R6JA047	M 5.6 OHM,J, 0.33W	1	
	R16551	D0GD100JA059	M 10 OHM,J,0.25W	1	
	R16553	D0GB473JA057	M 47KOHM,J,1/10W	1	
	R16561	EXB38V470J	RESISTOR ARRAY	1	
	R16562	EXB38V470J	RESISTOR ARRAY	1	
	R16563	EXB38V470J	RESISTOR ARRAY	1	
	R16564	EXB38V470J	RESISTOR ARRAY	1	
	R16565	EXB38V472JV	RESISTOR ARRAY	1	
	R16566	EXB38V472JV	RESISTOR ARRAY	1	
	R16567	EXB38V472JV	RESISTOR ARRAY	1	
	R16568	EXB38V472JV	RESISTOR ARRAY	1	
	R16570	EXB38V472JV	RESISTOR ARRAY	1	
	R16579	EXB38V470J	RESISTOR ARRAY	1	
	R16580	D0GB562JA041	M 5.6KOHM,J,1/10W	1	
	R16582	ERJ6ENF3902	M 39KOHM, 1/10W	1	
	R16583	ERJ6ENF3902	M 39KOHM, 1/10W	1	
	R16584	ERJ6ENF6801	M 6.8KOHM, 1/10W	1	
	R16585	D1BB1001A055	M 1KOHM, 1/10W	1	
	R16586	D1BB2151A055	M2.15KOHM, 1/10W	1	
	R16587	D0GB222JA041	M 2.2KOHM,J,1/10W	1	
	R16588	D0GB103JA057	M 10K OHM J 1/10W	1	
	R16590	ERJ3GEYJ221	M 220 OHM,J,1/16W	1	
	R16591	EXB38V472JV	RESISTOR ARRAY	1	
	R16593	D1BB1401A055	M 1.4KOHM, 1/10W	1	
	R16601	D0GF1R0JA047	M 1.0 OHM,J, 0.33W	1	
	R16604	ERJ6GEYJ331V	M 330 OHM J 1/10W	1	
	R16605	ERJ6GEYG182	M 1.8KOHM,J,1/10W	1	
	R16607	D1BB6981A055	M6.98KOHM, 1/10W	1	
	R16609	D0GF202JA047	M 2KOHM,J, 0.33W	1	
	R16610	D0GB104JA041	M 100KOHM J 1/10W	1	
	R16612	D0GD470JA059	M 47 OHM,J,0.25W	1	
	R16615	D1BB1101A055	M 1.1 KOHM, 1/10W	1	
	R16617	ERJ6GEYJ222V	M 2.2K OHM J 1/10W	1	
	R16621	ERJ6GEYJ221V	M 220 OHM,J,1/10W	1	

Safety	Ref. No.	Part No.	Part Name & Description	Pcs	Remarks
	R16631	D0GB103JA057	M 10K OHM J 1/10W	1	
	R16633	ERJ6GEYJ223	M 22KOHM,J,1/10W	1	
	R16634	ERJ6GEYJ471	M 470 OHM,J,1/10W	1	
	R16645	D0GB562JA041	M 5.6KOHM,J,1/10W	1	
	R16646	D1BB1181A055	M 1.18KOHM, 1/10W	1	
	R16648	D0GF202JA047	M 2KOHM,J, 0.33W	1	
	R16649	D0GD330JA059	M 33 OHM,F,0.25W	1	
	R16650	D0GB104JA041	M 100KOHM J 1/10W	1	
	R16651	D0GF202JA047	M 2KOHM,J, 0.33W	1	
	R16652	ERJ6GEYF822	M 8.2KOHM,F,1/10W	1	
	R16653	ERJ8GEYJ182	M 1.8KOHM, J,1/8W	1	
	R16654	ERJ6GEYJ470V	M 47 OHM,J,1/10W	1	
	R16655	D0GB103JA057	M 10K OHM J 1/10W	1	
	R16656	ERJ8GEYJ472V	M 4.7KOHM, J,1/8W	1	
	R16658	ERJ3RBD6341	M6.34 OHM, 1/13W	1	
	R16659	ERJ6GEY0R00V	M 0 OHM J 1/10W	1	
	R16660	ERJ6GEYJ222V	M 2.2K OHM J 1/10W	1	
	R16661	D0GB122JA041	N 1.2KOHM J 1/10W	1	
	R16662	D1BB1002A087	M 10KOHM, 1/10W	1	
	R16663	ERJ6RBD7151	M 7.15KOHM, 1/10W	1	
	R16664	D0GF202JA047	M 2KOHM,J, 0.33W	1	
	R16665	D0GD330JA059	M 33 OHM,F,0.25W	1	
	R16666	D1BB2202A087	M 22KOHM, 1/10W	1	
	R16667	D0GF202JA047	M 2KOHM,J, 0.33W	1	
	R16668	D0GF202JA047	M 2KOHM,J, 0.33W	1	
	R16673	ERJ6GEYJ472V	M 4.7K OHM J 1/10W	1	
	R16674	D0GF202JA047	M 2KOHM,J, 0.33W	1	
	R16675	ERJ3GEYJ472	M 4.7KOHM,J,1/16W	1	
	R16677	D0GF202JA047	M 2KOHM,J, 0.33W	1	
	R16678	D0GF202JA047	M 2KOHM,J, 0.33W	1	
	R16679	ERJ3RBD1072	M10.7KOHM, 1/13W	1	
	R16680	ERJ6GEYJ472V	M 4.7K OHM J 1/10W	1	
	R16681	D0GD100JA059	M 10 OHM,J,0.25W	1	
	R16684	ERJ6GEYJ221V	M 220 OHM,J,1/10W	1	
	R16685	ERJ6GEYJ221V	M 220 OHM,J,1/10W	1	
	R16686	D0GB103JA057	M 10K OHM J 1/10W	1	
	R16687	D1BB2702A055	M 27KOHM, 1/10W	1	
	R16688	D1BB8871A055	M8.87KOHM, 1/10W	1	
	R16690	ERJ3GEYJ472	M 4.7KOHM,J,1/16W	1	
	R16691	ERJ8GEYJ563	M 56KOHM, J,1/8W	1	
	R16692	ERJ6RBD152	M 1.5KOHM,J,1/10W	1	
	R16694	ERJ8GEYJ563	M 56KOHM, J,1/8W	1	
	R16695	ERJ6RBD152	M 1.5KOHM,J,1/10W	1	
	R16696	ERF5TK2R2	W 2.2 OHM, K, 5W	1	
	R16699	D0GB103JA057	M 10K OHM J 1/10W	1	
	R16707	ERJ6GEYG392	M 3.9KOHM,J,1/10W	1	
	R16711	ERJ3GEYJ472	M 4.7KOHM,J,1/16W	1	
	R16712	ERJ6GEYJ102V	M 1K OHM J 1/10W	1	
	R16717	D0GB102JA041	M 1KOHM,J,1/10W	1	
	R16719	ERJ3GEYJ220	M 22 OHM,J,1/16W	1	
	R16721	EXB38V220JV	RESISTOR ARRAY	1	
	R16742	D0GB473JA057	M 47KOHM,J,1/10W	1	
	R16745	D0GB474JA041	M 470KOHM,J,1/10W	1	

Safety	Ref. No.	Part No.	Part Name & Description	Pcs	Remarks
	R16746	ERJ6GEYF473	M 47KOHM,J,1/10W	1	
	R16747	ERJ6GEYJ222V	M 2.2K OHM J 1/10W	1	
	R16750	D0GD123JA059	M 12KOHM,F,0.25W	1	
	R16751	D0GD154JA059	M 150KOHM,F,0.25W	1	
	R16752	ERJ3GEYJ472	M 4.7KOHM,J,1/16W	1	
	R16753	ERJ6GEYF473	M 47KOHM,J,1/10W	1	
	R16755	D0GD123JA059	M 12KOHM,F,0.25W	1	
	R16756	D0GD123JA059	M 12KOHM,F,0.25W	1	
	R16761	D0GD100JA059	M 10 OHM,J,0.25W	1	
	R16763	D0GB473JA057	M 47KOHM,J,1/10W	1	
	R16765	D0GD100JA059	M 10 OHM,J,0.25W	1	
	R16769	D0GD750JA059	M 75 OHM,J,0.25W	1	
	R16772	ERJ3GEYJ472	M 4.7KOHM,J,1/16W	1	
	R16773	ERJ6GEYJ102V	M 1K OHM J 1/10W	1	
	R16774	ERG1SJ273	M 27KOHM, J, 1W	1	
	R16776	ERJ6GEYJ470V	M 47 OHM,J,1/10W	1	
	R16783	D0GD154JA059	M 150KOHM,F,0.25W	1	
	R16785	ERJ6ENF1073	M 107KOHM, 1/10W	1	
	R16786	ERJ6ENF1073	M 107KOHM, 1/10W	1	
	R16787	ERJ6ENF3302	M 33KOHM, 1/10W	1	
	R16789	D0GB103JA057	M 10K OHM J 1/10W	1	
	R16791	D0GB102JA041	M 1KOHM,J,1/10W	1	
	R16797	ERJ6GEYJ220	M 22 OHM,J,1/10W	1	
	R16798	D0GB222JA041	M 2.2KOHM,J,1/10W	1	
	R16799	D0GB102JA041	M 1KOHM,J,1/10W	1	
	R16801	ERJ6RBD223V	M 22KOHM, 1/16W	1	
	R16802	ERJ6RBD3092	M30.9KOHM,F,1/10W	1	
	R16804	ERJ8GEYJ112	M 1.1KOHM, J,1/8W	1	
	R16818	D1BB3302A055	M 33KOHM, 1/10W	1	
	R16819	ERJ6ENF1503	M 150KOHM, 1/10W	1	
	R16820	ERJ6ENF1503	M 150KOHM, 1/10W	1	
	R16822	ERJ6ENF8202	M 82KOHM, 1/10W	1	
	R16823	ERJ6ENF8202	M 82KOHM, 1/10W	1	
	R16824	ERJ6ENF3302	M 33KOHM, 1/10W	1	
	R16825	D0GD154JA059	M 150KOHM,F,0.25W	1	
	R16826	ERJ6GEYJ103V	M 10K OHM J 1/10W	1	
	R16827	D0GB222JA041	M 2.2KOHM,J,1/10W	1	
	R16829	D0GB102JA041	M 1KOHM,J,1/10W	1	
	R16831	ERJ6RBD6812	M68.1KOHM,F,1/10W	1	
	R16832	ERJ6RBD7152	M71.5KOHM,F,1/10W	1	
	R16837	D0GB102JA041	M 1KOHM,J,1/10W	1	
	R16838	ERG1FJS104D	M 100KOHM, J, 1W	1	
	R16841	ERJ3GEYJ472	M 4.7KOHM,J,1/16W	1	
	R16843	ERJ6GEYJ102V	M 1K OHM J 1/10W	1	
	R16844	ERA6YEB242	M 24KOHM, 1/10W	1	
	R16845	ERJ6RBD6652	M66.5KOHM,F,1/10W	1	
	R16846	ERJ6RBD6492	M64.9KOHM,F,1/10W	1	
	R16849	ERJ6RBD6492	M64.9KOHM,F,1/10W	1	
	R16851	D0GB474JA041	M 470KOHM,J,1/10W	1	
	R16852	D0GB474JA041	M 470KOHM,J,1/10W	1	
	R16860	ERG2FNJS8R2E	M 8.2 OHM, J, 2W	1	
	R16870	ERJ14YJ683	M 68KOHM, 1/2W	1	
	R16873	ERA6YEB242	M 24KOHM, 1/10W	1	
	R16891	D1BF6982A058	M 6.98KOHM, 1/10W	1	
	R16892	D1BF8252A058	M 8.25KOHM, 1/10W	1	

Safety	Ref. No.	Part No.	Part Name & Description	Pcs	Remarks
	R16893	D1BF8252A058	M 8.25KOHM, 1/10W	1	
	R16897	D1BB1001A055	M 1KOHM, 1/10W	1	
	R16898	D1BB1051A055	M 1.05KOHM, 1/10W	1	
	R16899	D1BB2741A055	M2.74KOHM, 1/10W	1	
	R16900	D0GB103JA057	M 10K OHM J 1/10W	1	
	R16901	ERJ3GEYJ472	M 4.7KOHM,J,1/16W	1	
	R16904	ERJ6GEYJ223	M 22KOHM,J,1/10W	1	
	R16919	D1BB7501A055	M7.50KOHM, 1/10W	1	
	R16920	D0GB103JA057	M 10K OHM J 1/10W	1	
	R16921	D1BB1241A055	M1.24KOHM, 1/10W	1	
	R16922	D1BB3481A055	M3.48KOHM, 1/10W	1	
	R16923	D0GB103JA057	M 10K OHM J 1/10W	1	
	R16926	ERJ6GEYJ222V	M 2.2K OHM J 1/10W	1	
	R16927	ERJ6GEYJ223	M 22KOHM,J,1/10W	1	
	R16928	ERJ6GEYJ472V	M 4.7K OHM J 1/10W	1	
	R16929	D0GF1R0JA047	M 1.0 OHM,J, 0.33W	1	
	R16930	D1BF2R70A021	M 2.7 OHM, 1/10W	1	
	R16931	D1BF2R70A021	M 2.7 OHM, 1/10W	1	
	R16932	ERJ6GEYJ223	M 22KOHM,J,1/10W	1	
	R16933	D1BB1002A055	M 10KOHM, 1/10W	1	
	R16934	D1BB6801A055	M 6.8KOHM, 1/10W	1	
	R16935	D0GB512JA041	M 5.1KOHM,J,1/10W	1	
	R16936	D0GB222JA041	M 2.2KOHM,J,1/10W	1	
	R16937	D0GB184JA041	M 180KOHM J 1/10W	1	
	R16938	D0GB184JA041	M 180KOHM J 1/10W	1	
	R17101	ERJ6GEY0R00V	M 0 OHM J 1/10W	1	
	R17103	EXB38V681J	RESISTOR ARRAY	1	
	R17104	EXB38V470J	RESISTOR ARRAY	1	
	R17105	EXB38V470J	RESISTOR ARRAY	1	
	R17106	D0GZ1R0JA020	C1.0 OHM, J, 0.5W	1	PAVCSG
	R17108	D0GB101JA041	M 100 OHM,J,1/10W	1	
	R17109	D0GB101JA041	M 100 OHM,J,1/10W	1	
	R17110	D0GB201JA041	M 200 OHM,J,1/10W	1	PAVCSG
	R17111	D0GZ1R0JA020	C1.0 OHM, J, 0.5W	1	PAVCSG
	R17113	D0GB101JA041	M 100 OHM,J,1/10W	1	
	R17114	D0GB101JA041	M 100 OHM,J,1/10W	1	
	R17115	D0GB201JA041	M 200 OHM,J,1/10W	1	PAVCSG
	R17116	D0GZ1R0JA020	C1.0 OHM, J, 0.5W	1	PAVCSG
	R17118	D0GB101JA041	M 100 OHM,J,1/10W	1	
	R17119	D0GB101JA041	M 100 OHM,J,1/10W	1	
	R17120	D0GB201JA041	M 200 OHM,J,1/10W	1	PAVCSG
	R17121	D0GZ1R0JA020	C1.0 OHM, J, 0.5W	1	PAVCSG
	R17123	D0GB101JA041	M 100 OHM,J,1/10W	1	
	R17124	D0GB101JA041	M 100 OHM,J,1/10W	1	
	R17125	D0GB201JA041	M 200 OHM,J,1/10W	1	PAVCSG
	R17126	D0GZ1R0JA020	C1.0 OHM, J, 0.5W	1	PAVCSG
	R17128	D0GB101JA041	M 100 OHM,J,1/10W	1	

Safety	Ref. No.	Part No.	Part Name & Description	Pcs	Remarks
	R17129	D0GB101JA041	M 100 OHM,J,1/10W	1	
	R17130	D0GB201JA041	M 200 OHM,J,1/10W	1	PAVCSG
	R17131	D0GZ1R0JA020	C1.0 OHM, J, 0.5W	1	PAVCSG
	R17133	D0GB101JA041	M 100 OHM,J,1/10W	1	
	R17134	D0GB101JA041	M 100 OHM,J,1/10W	1	
	R17135	D0GB201JA041	M 200 OHM,J,1/10W	1	PAVCSG
	R17136	D0GZ1R0JA020	C1.0 OHM, J, 0.5W	1	PAVCSG
	R17138	D0GB101JA041	M 100 OHM,J,1/10W	1	
	R17139	D0GB101JA041	M 100 OHM,J,1/10W	1	
	R17140	D0GB101JA041	M 100 OHM,J,1/10W	1	
	R17141	D0GZ1R0JA020	C1.0 OHM, J, 0.5W	1	PAVCSG
	R17143	D0GB101JA041	M 100 OHM,J,1/10W	1	
	R17144	D0GB101JA041	M 100 OHM,J,1/10W	1	
	R17145	D0GB101JA041	M 100 OHM,J,1/10W	1	
	R17146	D0GB681JA041	M 680 OHM,J,1/10W	1	
	R17147	ERJ6GEYJ224	M 220KOHM,J,1/10W	1	
	R17148	D0GF151JA047	M 150 OHM,J, 0.33W	1	
	R17150	D0GB102JA041	M 1KOHM,J,1/10W	1	
	R17151	D0GBR00Z0002	M 0 OHM J 1/10W	1	
	R17152	D0GBR00Z0002	M 0 OHM J 1/10W	1	
	R17153	D0GBR00Z0002	M 0 OHM J 1/10W	1	
	R17201	ERJ6GEYJ224	M 220KOHM,J,1/10W	1	
	R17202	EXB38V470J	RESISTOR ARRAY	1	
	R17203	EXB38V470J	RESISTOR ARRAY	1	
	R17204	EXB38V681J	RESISTOR ARRAY	1	
	R17205	EXB38V470J	RESISTOR ARRAY	1	
	R17206	EXB38V470J	RESISTOR ARRAY	1	
	R17207	EXB38V681J	RESISTOR ARRAY	1	
	R17208	EXB38V681J	RESISTOR ARRAY	1	
	R17210	D0GZ1R0JA020	C1.0 OHM, J, 0.5W	1	PAVCSG
	R17212	D0GB101JA041	M 100 OHM,J,1/10W	1	
	R17213	D0GB101JA041	M 100 OHM,J,1/10W	1	
	R17214	D0GB201JA041	M 200 OHM,J,1/10W	1	PAVCSG
	R17215	D0GZ1R0JA020	C1.0 OHM, J, 0.5W	1	PAVCSG
	R17217	D0GB101JA041	M 100 OHM,J,1/10W	1	
	R17218	D0GB101JA041	M 100 OHM,J,1/10W	1	
	R17219	D0GB201JA041	M 200 OHM,J,1/10W	1	PAVCSG
	R17220	D0GZ1R0JA020	C1.0 OHM, J, 0.5W	1	PAVCSG
	R17222	D0GB101JA041	M 100 OHM,J,1/10W	1	
	R17223	D0GB101JA041	M 100 OHM,J,1/10W	1	
	R17224	D0GB201JA041	M 200 OHM,J,1/10W	1	PAVCSG
	R17225	D0GZ1R0JA020	C1.0 OHM, J, 0.5W	1	PAVCSG
	R17227	D0GB101JA041	M 100 OHM,J,1/10W	1	
	R17228	D0GB101JA041	M 100 OHM,J,1/10W	1	
	R17229	D0GB201JA041	M 200 OHM,J,1/10W	1	PAVCSG

Safety	Ref. No.	Part No.	Part Name & Description	Pcs	Remarks
	R17230	D0GZ1R0JA020	C1.0 OHM, J, 0.5W	1	PAVCSG
	R17232	D0GB101JA041	M 100 OHM,J,1/10W	1	
	R17233	D0GB101JA041	M 100 OHM,J,1/10W	1	
	R17234	D0GB201JA041	M 200 OHM,J,1/10W	1	PAVCSG
	R17235	D0GZ1R0JA020	C1.0 OHM, J, 0.5W	1	PAVCSG
	R17237	D0GB101JA041	M 100 OHM,J,1/10W	1	
	R17238	D0GB101JA041	M 100 OHM,J,1/10W	1	
	R17239	D0GB201JA041	M 200 OHM,J,1/10W	1	PAVCSG
	R17240	D0GZ1R0JA020	C1.0 OHM, J, 0.5W	1	PAVCSG
	R17242	D0GB101JA041	M 100 OHM,J,1/10W	1	
	R17243	D0GB101JA041	M 100 OHM,J,1/10W	1	
	R17244	D0GB101JA041	M 100 OHM,J,1/10W	1	
	R17245	D0GB681JA041	M 680 OHM,J,1/10W	1	
	R17247	D0GF151JA047	M 150 OHM,J, 0.33W	1	
	R17260	ERJ6GEY0R00V	M 0 OHM J 1/10W	1	
	R17261	D0GBR00Z0002	M 0 OHM J 1/10W	1	
	R17262	D0GBR00Z0002	M 0 OHM J 1/10W	1	
	R17263	D0GBR00Z0002	M 0 OHM J 1/10W	1	
	RM2510	B3RAD0000168	REMOTE SENSOR	1	
	S1B	K1KA03BA0237	3P CONNECTOR	1	
	SC2	K1KY02B00012	2P CONNECTOR	1	
	SC20	K1MY35BA0345	35P CONNECTOR	1	
	SC41	K1KA09AA0707	9P CONNECTOR	1	
	SC42	K1KA09AA0707	9P CONNECTOR	1	
	SC46	K1KA09AA0707	9P CONNECTOR	1	
	SC50	K1KA02AA0193	2P CONNECTOR	1	
	SN2510	B3JB00000078	IC	1	PAVCSG
	SS11	K1KA03A00608	3P CONNECTOR	1	
	SS21	K1KA07A00170	7P CONNECTOR	1	
	SS24	K1KB07AA0087	7P CONNECTOR	1	
	SS33	K1KY08AA0719	8P CONNECTOR	1	
	SS58	K1MN13B00091	13P CONNECTOR	1	
	SS61	K1MN13B00091	13P CONNECTOR	1	
	SS64	K1MN13B00091	13P CONNECTOR	1	
	SW2500	K0F162B00002	SWITCH	1	
	SW5150	K0H1BA000445	SWITCH	1	
	SW5151	K0H1BA000445	SWITCH	1	
	SW5152	K0H1BA000445	SWITCH	1	
	SW5153	K0H1BA000445	SWITCH	1	
	SW5154	K0H1BA000445	SWITCH	1	
	T16471	G4DYA0000200	SWITCHING TRANS	1	
⚠	TU2901B	ENG39F02GF	TUNER	1	PAVCSG
	X8000	H0J245500101	CRYSTAL	1	
	X8001	H0J120500062	CRYSTAL	1	
	X9300	H0J200500076	CRYSTAL	1	
	ZA16001	K4CD01000011	AV TERMINAL	1	
	ZA16002	K4CD01000011	AV TERMINAL	1	
	ZA16003	K4CD01000011	AV TERMINAL	1	
	ZA16401	K4CD01000011	AV TERMINAL	1	
	ZA16402	K4CD01000011	AV TERMINAL	1	
	ZA16403	K4CD01000011	AV TERMINAL	1	
	ZA16404	K4CD01000011	AV TERMINAL	1	

Safety	Ref. No.	Part No.	Part Name & Description	Pcs	Remarks
	ZA16407	K4CD01000011	AV TERMINAL	1	
	ZA17101	K4CD01000013	AV TERMINAL	1	
	ZA17102	K4CD01000013	AV TERMINAL	1	
	ZA17103	K4CD01000013	AV TERMINAL	1	
	ZA17104	K4CD01000013	AV TERMINAL	1	
	ZA17105	K4CD01000013	AV TERMINAL	1	
	ZA17201	K4CD01000013	AV TERMINAL	1	
	ZA17202	K4CD01000013	AV TERMINAL	1	
	ZA17203	K4CD01000013	AV TERMINAL	1	
	ZA17204	K4CD01000013	AV TERMINAL	1	
⚠	A601	AYRA652MSV8T	ARRESTOR	1	
	C201	ECJ1VB1H332K	C 3300PF, K, 50V	1	
	C202	ACDE2R221KP	2kV 220p	1	
	C203	ACDE2R221KP	2kV 220p	1	
	C204	ECWH8333HA	P 0.033PF, J, 8KV	1	
	C205	ECWH8333HA	P 0.033PF, J, 8KV	1	
⚠	C206	ACKX101KYTJ5	250V 100p	1	
	C207	ECJ2XB1H104K	C 0.1UF, K, 50V	1	
	C208	ACMBC681J5T	50V 680p	1	
	C209	ECJ1VC1H471J	C 470PF J 50V	1	
	C211	ACRZL1H100T	50V 10P	1	
	C212	ACRZL1H100T	50V 10P	1	
	C213	ACYBB475K2F	25V 4.7PF	1	
	C214	ACMH1H010T	50V 1P	1	
	C215	ECJ1VB1E333K	C 0.033UF, K, 25V	1	
	C218	ACMBB106K1AT	10V 10P	1	
	C219	ECJ1VB1H472K	C 4700PF, K, 50V	1	
	C220	ACMBB106K1AT	10V 10P	1	
	C221	ACMEB104K5T	50V 0.1P	1	
	C251	ACMEB104K2T	25V 0.1P	1	
	C252	ECQV1H224JL	P 0.22UF, J, 50V	1	
	C255	ECQE2473SKF	C 0.047U 250V	1	
⚠	C256	ACCST230681K	230V 680P	1	
	C352	ACRZL1V561T	35V 560P	1	
	C366	ACRZL1E471LT	25V 470P	1	
	C375	ACMAB105K5T	50V 1P	1	
	C376	ACMEB105K1T	16V 1P	1	
	C379	ECJ2VB1H472K	C 0.42PF, K, 50V	1	
	C380	ACMEB333K5T	50V 0.033P	1	
	C382	ECJ1VB1H103K	C 0.001UF, K, 50V	1	
	C383	ACMEB105K1T	16V 1P	1	
	C401	ECQE2104SKF	250V 0.1PF	1	
	C402	ECQE2104SKF	250V 0.1PF	1	
⚠	C403	ACKMQ140471H	140V 470P	1	
	C404	ACRZL1H101T	50V 100P	1	
	C405	ACMBR222K2ET	250V 2200p	1	
⚠	C406	ACKZE1K152ZE	80V 1500P	1	
	C407	ACRR3DD101K7	2kV 100PF	1	
⚠	C408	ACKZE1K152ZE	80V 1500P	1	
	C409	ACMBR222K2ET	250V 2200p	1	
	C410	ACMEB222K5T	50V 2200p	1	
	C413	ECJ1VB1H103K	C 0.001UF, K, 50V	1	
	C415	ACMEB104K5T	50V 0.1P	1	
	C416	ACMEB224K2T	25V 0.22P	1	
	C418	ECJ1VB1H103K	C 0.001UF, K, 50V	1	
	C419	ECJ1VB1H103K	C 0.001UF, K, 50V	1	
	C420	ACMEB224K2T	25V 0.22P	1	
⚠	C501	ACLE103KC	PLASTIC FILM CAPACITOR(Xcap)	1	
	C503	ACPAG2W470T	450V 47P	1	
	C505	ACRZL1H220T	50V 22P	1	
	C506	ECJ1VB1H102K	C 1000PF, K, 50V	1	
	C507	ECJ1VB1H103K	C 0.001UF, K, 50V	1	
⚠	C508	ACMBB474K2T	25V 0.47P	1	

Safety	Ref. No.	Part No.	Part Name & Description	Pcs	Remarks
	C509	ECJ1VB1H103K	C 0.001UF, K, 50V	1	
	C510	ACRZL1H100T	50V 10P	1	
	C511	ECJ1VB1H102K	C 1000PF, K, 50V	1	
	C512	ECJ1VB1H103K	C 0.001UF, K, 50V	1	
	C513	ACMEB102K5T	50V 1000p	1	
	C515	ACRZL1H220T	50V 22P	1	
⚠	C516	ACKX221KYP	250V 220p	1	
	C518	ECQE2223SKF	250V 0.022PF	1	
	C551	ACRZG1A471T	10V 470P	1	
	C553	ACMEB474K1T	16V 0.47P	1	
	C554	ACRZL1E821LT	16V 0.47P	1	
	C555	ACMBB225K2T	25V 2.2P	1	
	C556	ACMBB105K2T	25V 1P	1	
	C557	ECJ2XB1H104K	C 0.1UF, K, 50V	1	
	C558	ECJ1VB1H103K	C 0.001UF, K, 50V	1	
	C560	ACRZL1E221T	25V 220P	1	
	C561	ACRZL1H100T	50V 10P	1	
	C573	ACDE1R102KP	1kV 1000P	1	
	C574	ACMEB681K5T	50V 680P	1	
⚠	C601	ACLEM474XKC	450V 2.2P	1	
⚠	C602	ACKX221KYP	250V 220p	1	
⚠	C603	ACKX221KYP	250V 220p	1	
⚠	C605	ECWF2W225KA	450V 2.2P	1	
	C606	ECJ1VB1H102K	C 1000PF, K, 50V	1	
	C608	ECJ1VB1H222K	C 2200PF, K, 50V	1	
	C609	ACTEB104K5T	50V 0.1P	1	
	C610	ACMEB224K2T	25V 0.22P	1	
	C611	ECJ1XC1H102J	C 1000PF, J, 50V	1	
	C613	ECJ1VB1H103K	C 0.001UF, K, 50V	1	
	C615	ACMBB225K2T	25V 2.2P	1	
	C616	ACTEB474K1T	16V 0.47P	1	
⚠	C617	ACLEM474XKC	450V 2.2P	1	
	C620	ACMBB474K2T	25V 0.47P	1	
⚠	C623	ACKMQ2W331LZ	450V 330P	1	
	C628	ACMBR225K2T	25V 2.2P	1	
	C629	ECQV1H334JL	50V 0.33P	1	
	C630	ECJ1VC1H471J	C 470PF J 50V	1	
	C631	ECJ1VB1H103K	C 0.001UF, K, 50V	1	
	C701	ACRZL1A221T	50V 0.1P	1	
	C702	ACMEB104K5T	50V 0.1P	1	
	C703	ACMEB104K5T	50V 0.1P	1	
	C704	ECJ2XB1H104K	C 0.1UF, K, 50V	1	
	C705	ECJ2XB1H104K	C 0.1UF, K, 50V	1	
	C706	ECJ2XC1H102J	C 1000PF, J, 50V	1	
	C707	ACMEB104K5T	50V 0.1P	1	
	C708	ECJ2XB1H104K	C 0.1UF, K, 50V	1	
	C709	ACMEB104K5T	50V 0.1P	1	
	C710	ACMEB224K1T	16V 0.22P	1	
	C711	ACMEB223K5T	50V 0.022P	1	
	C712	ECJ2XB1H104K	C 0.1UF, K, 50V	1	
	C713	ACMBB225K2T	25V 2.2P	1	
	C715	ACMEB105K1T	16V 1P	1	
	CN701	AKB6B-PH-KS	6P CONNECTOR	1	
	D201	VDERA83-004T	DIODE	1	
	D202	VDERA83-004T	DIODE	1	
	D203	VDAG01AT	DIODE	1	
	D204	VDAG01AT	DIODE	1	
	D205	VDAG01AT	DIODE	1	
	D206	VD1SS133T	DIODE	1	
	D251	VDD4SBL40	DIODE	1	
	D252	VD1SS133T	DIODE	1	
	D351	VDFMEN210A	DIODE	1	
	D359	VDRK46LF307	DIODE	1	
	D401	VDD4SBL20U	DIODE	1	
	D402	VDAG01AT	DIODE	1	
	D403	VDYG901C3R	DIODE	1	

Safety	Ref. No.	Part No.	Part Name & Description	Pcs	Remarks
⚠	D501	VDS1WBA80	DIODE	1	
	D502	VD1SS133T	DIODE	1	
	D503	VXST3D140LM2	DIODE	1	
	D504	VDAG01AT	DIODE	1	
	D505	VDAG01AT	DIODE	1	
	D506	VD1T7GA1	DIODE	1	
	D507	VD1T7GA1	DIODE	1	
	D509	VDAP01CT	DIODE	1	
	D551	VDCB863-12T	DIODE	1	
	D552	VDYG902C3R	DIODE	1	
	D601	VD1SS133T	DIODE	1	
	D602	VD1SS133T	DIODE	1	
⚠	D603	VDD15XB80	DIODE	1	
	D605	VD1SS133T	DIODE	1	
⚠	D606	VD1N5406G-07	DIODE	1	
	D607	VDYG982S6R	DIODE	1	
	D608	VDERA83-004T	DIODE	1	
	D701	VDERA83-004T	DIODE	1	
	D702	VDRB721Q40	DIODE	1	
	D703	VDRB721Q40	DIODE	1	
	D704	VDRB721Q40	DIODE	1	
	D705	VD1SS133T	DIODE	1	
	D706	VD1SS355T	DIODE	1	
	D707	VD1SS355T	DIODE	1	
	D708	VD1SS355T	DIODE	1	
⚠	F201	HU216005BEP	FUSE	1	
⚠	F501	HU215002BEP	FUSE	1	
⚠	F601	HU215010BEP	FUSE	1	
⚠	F602	HU5013010PRC	CARTRIDGE FUSE	1	
	IC201	VIMCZ5203D	INTEGRATED CIR-CUIT	1	
	IC202	VINJM2903ME1	INTEGRATED CIR-CUIT	1	
	IC251	VIJM1431AF	IC	1	
	IC352	VISC2628T	INTEGRATED CIR-CUIT	1	
	IC403	VISC2603ASKT	IC	1	
⚠	IC501	MIP3E50MY	POWER INTE-GRATED CIRCUIT	1	
	IC551	VIJM2380AFE1	IC	1	
	IC601	VIFA5610NTE1	IC	1	
	IC701	VISM42N04T	IC	1	
	JQ1	ERJ6GEY0R00V	M 0 OHM J 1/10W	1	
	JQ2	ERJ6GEY0R00V	M 0 OHM J 1/10W	1	
	JQ3	ERJ6GEY0R00V	M 0 OHM J 1/10W	1	
	JQ4	ERJ6GEY0R00V	M 0 OHM J 1/10W	1	
	JQ5	ERJ6GEY0R00V	M 0 OHM J 1/10W	1	
	JQ6	ERJ6GEY0R00V	M 0 OHM J 1/10W	1	
	JQ7	ERJ6GEY0R00V	M 0 OHM J 1/10W	1	
	JQ8	ERJ6GEY0R00V	M 0 OHM J 1/10W	1	
	JQ9	ERJ6GEY0R00V	M 0 OHM J 1/10W	1	
	JQ10	ERJ6GEY0R00V	M 0 OHM J 1/10W	1	
	JQ11	ERJ6GEY0R00V	M 0 OHM J 1/10W	1	
	JR1	ERJ8GEY0R00	M 0 OHM, 1/8W	1	
	JR2	ERJ8GEY0R00	M 0 OHM, 1/8W	1	
	JR3	ERJ8GEY0R00	M 0 OHM, 1/8W	1	
	JR4	ERJ8GEY0R00	M 0 OHM, 1/8W	1	
	JR5	ERJ8GEY0R00	M 0 OHM, 1/8W	1	
	JR6	ERJ8GEY0R00	M 0 OHM, 1/8W	1	
⚠	K602	ALKS329M02	RELAY	1	
⚠	K605	ALKS329M02	RELAY	1	
	L201	AYTSKA170T	FERRITE BEAD INDUCTOR	1	
	L351	AYS1215003D	CHOKE COIL	1	
	L353	EXCELSA35T	BEAD CHOKE	1	
	L401	AYCA45VB681K	CHOKE COIL	1	
	L402	AYJ231214HY	CHOKE COIL	1	

Safety	Ref. No.	Part No.	Part Name & Description	Pcs	Remarks
	L501	AYTSKA170T	FERRITE BEAD INDUCTOR	1	
⚠	L601	AYS259027HY	CHOKE COIL	1	
⚠	L602	AYS256227HY	CHOKE COIL	1	
⚠	L603	ETB42AZ15GAD	TRANSFORMER	1	
	P2	AKB2P3S-VH	2P CONNECTOR	1	
	P6	AKB11B-PH-KS	11P CONNECTOR	1	
	P7	AKB14B-PH-KS	14P CONNECTOR	1	
⚠	P9	AKS02B-VT	CONNECTOR	1	
	P11	AKB3P4S-VH-L	3P CONNECTOR	1	
	P25	AKB10B-PH-KS	10P CONNECTOR	1	
	P34	AKB3B-PH-KS	3P CONNECTOR	1	
	P35	AKB4B-PH-KS	4P CONNECTOR	1	
⚠	PC201	VPS2581AL2HE	OPTOISOLATOR	1	
⚠	PC202	VPS2581AL2HE	OPTOISOLATOR	1	
⚠	PC501	VPS2581AL2HE	OPTOISOLATOR	1	
⚠	PC502	VPS2581AL2HE	OPTOISOLATOR	1	
⚠	PC504	VPS2581AL2HE	OPTOISOLATOR	1	
⚠	Q201	VKFMV17N55ES	FET	1	
⚠	Q202	VKFMV17N55ES	FET	1	
	Q203	VQ2PB709ART	TRANSISTOR	1	
	Q204	VQ2PD601ART	TRANSISTOR	1	
	Q251	2SK3018TL	FET	1	
	Q252	2SK3018TL	FET	1	
	Q355	2SJ651	FET	1	
	Q401	2SK3607	FET	1	
	Q402	2SA1776TV2P	FET	1	
	Q403	2SA1776TV2P	FET	1	
	Q404	VQPBSS4350T	TRANSISTOR	1	
	Q405	VQ2PD601ART	TRANSISTOR	1	
	Q406	2SK3018TL	FET	1	
	Q407	VQPBSS4350T	TRANSISTOR	1	
	Q408	VQPBSS5350T	TRANSISTOR	1	
	Q502	2SK3018TL	FET	1	
	Q503	VQPBSS4350T	TRANSISTOR	1	
	Q504	VQ2PB709ART	TRANSISTOR	1	
	Q505	2SK3018TL	FET	1	
	Q506	VQ2PB709ART	TRANSISTOR	1	
	Q551	2SJ673	FET	1	
	Q557	VKRJJ0319DSP	FET	1	
	Q558	2SK3018TL	FET	1	
	Q559	VQ2PB709ART	TRANSISTOR	1	
⚠	Q601	VKR6015ANZ	FET	1	
	Q602	VQPBSS4350T	TRANSISTOR	1	
	Q603	VQPBSS5350T	TRANSISTOR	1	
	Q605	2SK3018TL	FET	1	
⚠	Q606	VKR6015ANZ	FET	1	
	Q607	VQ2PB709ART	TRANSISTOR	1	
	Q701	VQ2PB710ARLT	TRANSISTOR	1	
	Q702	VQ2PB710ARLT	TRANSISTOR	1	
	Q703	VQ2PD601ART	TRANSISTOR	1	
	Q704	VQ2PD601ART	TRANSISTOR	1	
	Q705	VQ2PD601ART	TRANSISTOR	1	
	Q706	VQ2PB709ART	TRANSISTOR	1	
	Q707	VQ2PD601ART	TRANSISTOR	1	
	Q708	VQ2PD601ART	TRANSISTOR	1	
	R201	ERJ6GEYJ103V	M 10K OHM J 1/10W	1	
	R202	ERJ6GEYJ153V	M 15KOHM,J,1/10W	1	
	R203	D0GB103JA057	M 10K OHM J 1/10W	1	
	R204	D0GB103JA057	M 10K OHM J 1/10W	1	
	R205	ERJ6ENF3903	M 390KOHM, 1/10W	1	
	R206	ERJ6ENF3903	M 390KOHM, 1/10W	1	
	R207	ERJ6ENF3903	M 390KOHM, 1/10W	1	
	R208	ERJ6ENF3903	M 390KOHM, 1/10W	1	
	R209	D0GB183JA057	M 18K OHM J 1/10W	1	

Safety	Ref. No.	Part No.	Part Name & Description	Pcs	Remarks
	R210	ERJ6RBD152	M 1.5KOHM,J,1/10W	1	
	R211	ERJ3GEYD153V	M 15KOHM,J,1/16W	1	
	R213	ERX1SJ1R0	M 1.0 OHM, J, 1W	1	
	R214	ERX12SJ5R6J	M 5.6 OHM, J,1/2W	1	
	R215	ERG12SJ680J	M 68 OHM, J,1/2W	1	
	R216	ERG12SJ680J	M 68 OHM, J,1/2W	1	
	R217	ERJ6ENF1800	M 180 OHM, 1/10W	1	
	R218	ERJ6ENF1500	M 150 OHM, 1/10W	1	
	R219	ARRF5EJ50MB	0.05 OHM, 5W	1	
	R221	ERJ6ENF3903	M 390KOHM, 1/10W	1	
	R222	ERJ6ENF3903	M 390KOHM, 1/10W	1	
	R223	ERJ6ENF3903	M 390KOHM, 1/10W	1	
	R224	ERJ6ENF3903	M 390KOHM, 1/10W	1	
	R231	ERQ14AJ4R7J	F 4.7 OHM, J,1/4W	1	
	R232	ERJ3EKF1001	M 1KOHM, 1/16W	1	
	R233	ERJ3EKF1001	M 1KOHM, 1/16W	1	
	R234	ERJ3EKF1582	M15.8KOHM, 1/16W	1	
	R235	ERJ3EKF8870	M 882 OHM, 1/16W	1	
	R236	ERDS2FJ472	C 4.7KOHM, J,1/4W	1	
	R237	D0GB473JA057	M 47KOHM,J,1/10W	1	
	R238	ERJ6RBD152	M 1.5KOHM,J,1/10W	1	
	R239	ERDS2FJ103	C 10KOHM, J,1/4W	1	
	R253	ERJ6GEY0R00V	M 0 OHM J 1/10W	1	
	R254	ERJ6GEYJ102V	M 1K OHM J 1/10W	1	
	R256	ERJ6ENF3901	M 3.9KOHM, 1/10W	1	
	R257	ERJ6GEYJ472V	M 4.7K OHM J 1/10W	1	
	R258	ERJ6GEYJ472V	M 4.7K OHM J 1/10W	1	
	R259	ERJ6GEYJ472V	M 4.7K OHM J 1/10W	1	
	R260	ERJ6GEYJ202	M 2KOHM,J,1/10W	1	
	R264	ERJ6GEYJ102V	M 1K OHM J 1/10W	1	
	R265	ERJ6ENF1742	M17.4KOHM, 1/10W	1	
	R266	ERJ6ENF7502	M 75KOHM, 1/10W	1	
	R267	ERJ6ENF7502	M 75KOHM, 1/10W	1	
	R268	ERJ6ENF7502	M 75KOHM, 1/10W	1	
	R269	ERJ6ENF7502	M 75KOHM, 1/10W	1	
	R270	ERJ6ENF4992	M49.9KOHM, 1/10W	1	
	R271	ERJ6ENF4992	M49.9KOHM, 1/10W	1	
	R272	ERJ6ENF4992	M49.9KOHM, 1/10W	1	
	R273	ERJ6ENF4992	M49.9KOHM, 1/10W	1	
	R274	ERJ6ENF4872	M48.7KOHM, 1/10W	1	
	R275	ERJ6ENF9532	M95.3KOHM, 1/10W	1	
	R276	D0GB103JA057	M 10K OHM J 1/10W	1	
	R277	ERJ6ENF1503	M 150KOHM, 1/10W	1	
	R278	D0GB103JA057	M 10K OHM J 1/10W	1	
	R279	D0GB102JA057	M 1KOHM,J,1/10W	1	
	R280	D0GB102JA057	M 1KOHM,J,1/10W	1	
	R351	ERJ6ENF1332	M13.3KOHM, 1/10W	1	
	R352	ERJ6ENF1302	M 13KOHM, 1/10W	1	
	R353	ERJ6ENF8661	M8.66KOHM, 1/10W	1	
	R354	ERJ6ENF8661	M8.66KOHM, 1/10W	1	
	R371	ERJ6RND1782	CHIP RESISTOR	1	
	R372	ERJ6RND1001	CHIP RESISTOR	1	
	R389	ERJ3GEYJ104	M 100KOHM,J,1/16W	1	
	R390	ERJ3GEY0R00	M 0 OHM, 1/16W	1	
	R391	ERJ6GEYJ183V	M 18KOHM,J,1/10W	1	
	R392	ERJ6ENF3921	M3.92KOHM, 1/10W	1	
	R393	ERJ6GEYJ472V	M 4.7K OHM J 1/10W	1	
	R394	ERJ6ENF1002	M 10KOHM, 1/10W	1	
	R402	ERJ3EKF1002	M 10KOHM, 1/16W	1	
	R403	ERG12SJ100J	M 10 OHM, J,1/2W	1	
	R404	ERJ6ENF2492	M24.9KOHM, 1/10W	1	
	R405	ARRF2EJR10B	250V 2200P	1	
	R408	ERJ3GEYJ682	M 6.8KOHM,J,1/16W	1	

Safety	Ref. No.	Part No.	Part Name & Description	Pcs	Remarks
	R409	ERJ6GEYF473	M 47KOHM,J,1/10W	1	
	R411	ERJ6ENF2001V	M 2KOHM, 1/10W	1	
	R412	ERJ6ENF2001V	M 2KOHM, 1/10W	1	
	R413	ERJ6ENF2552	M25.5KOHM, 1/10W	1	
	R414	ERJ6ENF2492	M24.9KOHM, 1/10W	1	
	R416	ERJ3GEYJ333	M 33KOHM,J,1/16W	1	
	R417	ERJ6ENF3482	M34.8KOHM, 1/10W	1	
	R418	ERJ6ENF3482	M34.8KOHM, 1/10W	1	
	R419	D0GB103JA057	M 10K OHM J 1/10W	1	
	R420	ERJ6ENF1301	M 1.3KOHM, 1/10W	1	
	R421	ERJ6ENF1332	M13.3KOHM, 1/10W	1	
	R422	ERJ6ENF2492	M24.9KOHM, 1/10W	1	
	R423	ARSG734K220U	22 OHM, 0.33W	1	
	R425	ERJ3GEYD153V	M 15KOHM,J,1/16W	1	
	R426	ERJ3GEYD153V	M 15KOHM,J,1/16W	1	
	R428	ERJ3GEYJ223	M 22KOHM,J,1/16W	1	
	R429	ERJ3GEYJ470	M 47 OHM,J,1/16W	1	
	R433	ERJ3EKF82R5	82.5 OHM 62.5mW	1	
	R434	ERJ3RED270	M 27 OHM, 1/16W	1	
	R435	ERJ3EKF1820	M 182 OHM, 1/16W	1	
	R436	ERJ3RED270	M 27 OHM, 1/16W	1	
	R437	ERJ3EKF1241	M1.24KOHM, 1/16W	1	
	R438	ERJ3EKF5621	M5.62KOHM, 1/16W	1	
	R439	D0GB154JA057	M 150KOHM J 1/10W	1	
	R440	ERJ14YJ220U	M 22 OHM, J,1/4W	1	
	R441	ARSG734K150U	15 OHM, 0.33W	1	
	R501	ERJ6ENF4123	M 412KOHM, 1/10W	1	
	R502	ERJ6ENF4123	M 412KOHM, 1/10W	1	
	R503	ERJ6ENF4123	M 412KOHM, 1/10W	1	
	R504	ERJ6ENF4123	M 412KOHM, 1/10W	1	
	R505	ERJ6ENF4123	M 412KOHM, 1/10W	1	
	R506	ERJ6ENF4123	M 412KOHM, 1/10W	1	
⚠	R507	ARRCR6J825M	8.2MOHM, 1W	1	
	R508	ERJ3EKF1303	M 130KOHM, 1/16W	1	
	R512	ERJ3GEYJ224	M 220KOHM,J,1/16W	1	
	R513	ERJ3GEYJ223	M 22KOHM,J,1/16W	1	
	R514	ERJ3EKF1303	M 130KOHM, 1/16W	1	
	R515	D0GB103JA057	M 10K OHM J 1/10W	1	
	R516	ERJ6GEYF473	M 47KOHM,J,1/10W	1	
	R518	ERG12SJ220J	M 22 OHM, J,1/2W	1	
	R519	ERJ3GEYJ224	M 220KOHM,J,1/16W	1	
	R520	ERDS2FJ121	C 120 OHM, J,1/4W	1	
	R521	ERJ3GEYJ223	M 22KOHM,J,1/16W	1	
	R522	ERJ6GEYJ180	M 18 OHM,J,1/10W	1	
	R524	ERJ3GEYJ223	M 22KOHM,J,1/16W	1	
	R525	ERJ6GEYJ103V	M 10K OHM J 1/10W	1	
	R526	ERJ3GEYJ472	M 4.7KOHM,J,1/16W	1	
	R529	ARR5B100JC2	5W 10 OHM	1	
	R530	ERJ3GEYJ471	M 470 OHM,J,1/16W	1	
	R531	ERJ6GEYJ103V	M 10K OHM J 1/10W	1	
	R532	ERJ6ENF4123	M 412KOHM, 1/10W	1	
	R533	ERJ6ENF4123	M 412KOHM, 1/10W	1	
	R534	ERJ6ENF4123	M 412KOHM, 1/10W	1	
	R535	ERJ6ENF4123	M 412KOHM, 1/10W	1	
	R536	ERJ6ENF4123	M 412KOHM, 1/10W	1	
	R537	ERJ6ENF4123	M 412KOHM, 1/10W	1	
	R538	ERG1DJ334	330k 1W	1	
	R551	ERJ6GEYJ151V	M 150 OHM,J,1/10W	1	
	R552	ERJ3GEYJ472	M 4.7KOHM,J,1/16W	1	
	R553	D0GB102JA057	M 1KOHM,J,1/10W	1	
	R555	ERJ3EKF1072	M10.7KOHM, 1/16W	1	
	R556	ERJ3EKF1002	M 10KOHM, 1/16W	1	
	R557	ERJ3EKF7872	M78.7KOHM, 1/16W	1	

Safety	Ref. No.	Part No.	Part Name & Description	Pcs	Remarks
	R558	ERJ6GEYJ124V	M 120KOHM,J,1/10W	1	
	R570	D0GB473JA057	M 47KOHM,J,1/10W	1	
	R573	ERJ6GEYJ332V	M 3.3K OHM J 1/10W	1	
	R574	ERG2SJ561H	M 560 OHM, J, 2W	1	
	R575	ERG2SJ561H	M 560 OHM, J, 2W	1	
	R576	ERJ3GEYJ223	M 22KOHM,J,1/16W	1	
	R577	ERJ6GEYJ333V	M 33KOHM,J,1/10W	1	
	R578	ERJ6GEYF561	M 560 OHM,F,1/10W	1	
	R579	ERJ3GEYJ104	M 100KOHM,J,1/16W	1	
	R580	ERJ3GEYJ104	M 100KOHM,J,1/16W	1	
⚠	R601	ARRCR5J624M	620M 0.5W	1	
	R603	ERJ6ENF2703	M 270KOHM, 1/10W	1	
	R604	ERJ6ENF2703	M 270KOHM, 1/10W	1	
	R605	ERJ6ENF2703	M 270KOHM, 1/10W	1	
	R606	ERJ6ENF2703	M 270KOHM, 1/10W	1	
	R607	ERJ3EKF3302	M 33KOHM, 1/16W	1	
	R608	ERJ3EKF1002	M 10KOHM, 1/16W	1	
	R609	D0GB225JA057	M 2.2MOHM J 1/10W	1	
	R610	ERJ3GEYJ470	M 47 OHM,J,1/16W	1	
	R611	ERJ3GEYJ470	M 47 OHM,J,1/16W	1	
	R612	ERJ6ENF3093	M 309KOHM, 1/10W	1	
	R613	ERJ3GEYJ223	M 22KOHM,J,1/16W	1	
	R614	ERJ6ENF3093	M 309KOHM, 1/10W	1	
	R615	D0GB103JA057	M 10K OHM J 1/10W	1	
	R616	ERJ6ENF3093	M 309KOHM, 1/10W	1	
	R617	ARRF5EJ75MB	0.075 OHM, 5W	1	
	R618	ARRF5EJ75MB	0.075 OHM, 5W	1	
	R619	ERJ6ENF3163	M 316KOHM, 1/10W	1	
	R620	ERJ6ENF3163	M 316KOHM, 1/10W	1	
	R621	ERJ3EKF1652	M16.5KOHM, 1/16W	1	
	R622	ERJ6ENF9312	M93.1KOHM, 1/10W	1	
	R623	ERJ6ENF9312	M93.1KOHM, 1/10W	1	
	R624	ERDS2FJ472	C 4.7KOHM, J,1/4W	1	
	R625	ERDS2FJ101	C 100 OHM, J,1/4W	1	
	R626	ERJ6ENF9312	M93.1KOHM, 1/10W	1	
	R627	ERDS2FJ154	C 150KOHM, J,1/4W	1	
	R628	ERJ6ENF9312	M93.1KOHM, 1/10W	1	
	R629	ERG12SJ150J	M 15 OHM, J,1/2W	1	
	R630	ERJ6ENF9312	M93.1KOHM, 1/10W	1	
	R631	ERJ6ENF9312	M93.1KOHM, 1/10W	1	
	R634	ERJ6ENF3093	M 309KOHM, 1/10W	1	
	R635	ERJ6ENF3093	M 309KOHM, 1/10W	1	
	R636	ERJ6ENF3093	M 309KOHM, 1/10W	1	
	R637	ERJ6ENF9312	M93.1KOHM, 1/10W	1	
	R638	ERJ6ENF9312	M93.1KOHM, 1/10W	1	
	R640	ERJ6ENF1692	M16.9KOHM, 1/10W	1	
	R641	ERJ6GEYJ151V	M 150 OHM,J,1/10W	1	
	R642	D0GB473JA057	M 47KOHM,J,1/10W	1	
	R649	ERJ6ENF2703	M 270KOHM, 1/10W	1	
	R650	ERJ6ENF2703	M 270KOHM, 1/10W	1	
	R651	ERJ6GEYJ220	M 22 OHM,J,1/10W	1	
	R652	ERJ6GEYJ220	M 22 OHM,J,1/10W	1	
	R653	ERJ6GEYJ220	M 22 OHM,J,1/10W	1	
	R654	ERJ6GEYJ220	M 22 OHM,J,1/10W	1	
	R660	ERDS2FJ472	C 4.7KOHM, J,1/4W	1	
	R661	ERJ6GEYJ220	M 22 OHM,J,1/10W	1	
	R662	ERJ6GEYJ220	M 22 OHM,J,1/10W	1	
	R663	ERJ6GEYJ220	M 22 OHM,J,1/10W	1	
	R664	ERJ6GEYJ220	M 22 OHM,J,1/10W	1	
	R665	D0GB103JA057	M 10K OHM J 1/10W	1	
	R666	ERJ3GEYJ223	M 22KOHM,J,1/16W	1	
	R667	D0GB181JA057	M 180 OHM,J,1/10W	1	

Safety	Ref. No.	Part No.	Part Name & Description	Pcs	Remarks
	R701	ERJ6GEYJ1R0	M 1 OHM,J,1/10W	1	
	R702	ERJ3GEYJ221	M 220 OHM,J,1/16W	1	
	R704	ERJ6ENF4992	M49.9KOHM, 1/10W	1	
	R705	ERJ6GEYJ1R0	M 1 OHM,J,1/10W	1	
	R706	D0GB103JA057	M 10K OHM J 1/10W	1	
	R707	D0GB103JA057	M 10K OHM J 1/10W	1	
	R708	ERJ3GEYJ101	M 100 OHM,J,1/16W	1	
	R709	ERDS2FJ102	M 1KOHM,J,1/10W	1	
	R710	ERJ6GEYJ104V	M 100KOHM,J,1/10W	1	
	R711	ERJ3GEYJ514	M 510KOHM,J,1/16W	1	
	R712	ERJ3GEYJ101	M 100 OHM,J,1/16W	1	
	R713	ERJ3GEYJ104	M 100KOHM,J,1/16W	1	
	R714	ERJ6ENF4991	M4.99KOHM, 1/10W	1	
	R715	ERJ6ENF4991	M4.99KOHM, 1/10W	1	
	R716	ERJ6ENF4991	M4.99KOHM, 1/10W	1	
	R717	ERJ6ENF4991	M4.99KOHM, 1/10W	1	
	R718	ERJ3GEYJ101	M 100 OHM,J,1/16W	1	
	R720	ERJ3GEYJ561	M 560 OHM,J,1/16W	1	
	R721	ERJ3GEYJ101	M 100 OHM,J,1/16W	1	
	R722	ERJ3GEYJ101	M 100 OHM,J,1/16W	1	
	R723	ERJ6GEYJ103V	M 10K OHM J 1/10W	1	
	R724	ERJ3GEYJ101	M 100 OHM,J,1/16W	1	
	R725	D0GB103JA057	M 10K OHM J 1/10W	1	
	R729	D0GB103JA057	M 10K OHM J 1/10W	1	
	R730	ERJ6GEYJ224	M 220KOHM,J,1/10W	1	
	R731	ERJ6GEYJ101V	M 100 OHM,J,1/10W	1	
	R732	D0GB103JA057	M 10K OHM J 1/10W	1	
	R733	ERJ3EKF4701	M 4.7KOHM, 1/16W	1	
	R734	ERJ3EKF5601	M 5.6KOHM, 1/16W	1	
	R735	ERJ6GEYJ102V	M 1K OHM J 1/10W	1	
	R736	ERJ3GEYJ122	M 1.2KOHM,J,1/16W	1	
	R737	ERJ6GEYJ221V	M 220 OHM,J,1/10W	1	
	R738	D0GB103JA057	M 10K OHM J 1/10W	1	
	R739	ERJ3GEYJ101	M 100 OHM,J,1/16W	1	
	R740	D0GB103JA057	M 10K OHM J 1/10W	1	
	R741	D0GB103JA057	M 10K OHM J 1/10W	1	
	R742	ERDS2FJ103	C 10KOHM, J,1/4W	1	
	R743	ERJ3GEYJ221	M 220 OHM,J,1/16W	1	
	R744	D0GB103JA057	M 10K OHM J 1/10W	1	
	R745	D0GB103JA057	M 10K OHM J 1/10W	1	
	R746	D0GB103JA057	M 10K OHM J 1/10W	1	
	R747	D0GB103JA057	M 10K OHM J 1/10W	1	
	R748	D0GB103JA057	M 10K OHM J 1/10W	1	
	R749	D0GB103JA057	M 10K OHM J 1/10W	1	
	R750	D0GB103JA057	M 10K OHM J 1/10W	1	
	R751	ERJ6GEYJ102V	M 1K OHM J 1/10W	1	

Safety	Ref. No.	Part No.	Part Name & Description	Pcs	Remarks
	R752	D0GB103JA057	M 10K OHM J 1/10W	1	
	R755	ERJ6GEYJ472V	M 4.7K OHM J 1/10W	1	
	R756	ERJ6GEYJ101V	M 100 OHM,J,1/10W	1	
	R757	ARRF5EJR15B	0.15 OHM 5W	1	
	R758	ER0S2CHF1002	M 10KOHM, F,1/4W	1	
	R759	ER0S2CHF1002	M 10KOHM, F,1/4W	1	
	R760	ERJ6GEYG681	M 680 OHM,J,1/10W	1	
	R761	ERJ6GEYG681	M 680 OHM,J,1/10W	1	
⚠	RF601	HUA5MC100JP2	THERMAL CUTOFF WITH RESISTOR	1	
⚠	T201	ETB39LJ12GAD	TRANSFORMER	1	
⚠	T501	ETB29AK1RGAD	TRANSFORMER	1	
⚠	TG1	TW-4BS-2L	LUG TERMINAL	1	
⚠	TG2	TW-4BS-2L	LUG TERMINAL	1	
⚠	TG3	TW-4BS-2L	LUG TERMINAL	1	
⚠	TG4	TW-4BS-2L	LUG TERMINAL	1	
⚠	TG5	TW-4BS-2L	LUG TERMINAL	1	
	VR251	EVMEASA01B25	CONTROL 200KOHMB	1	
	VR401	EVMAASA00B54	CONTROL 50KOHMB	1	
⚠	Z601	ERZVGED751	VARISTOR	1	
⚠	Z602	ERZVGAD471	VARISTOR	1	
	ZD203	VZMTZJ27DT	ZENER DIODE	1	
	ZD204	VZMTZJ27DT	ZENER DIODE	1	
	ZD205	VZMTZJ27DT	ZENER DIODE	1	
	ZD206	VZMTZJ5.1BT	ZENER DIODE	1	
	ZD251	VZMTZJ5.6BT	ZENER DIODE	1	
	ZD401	VZMTZJ15CT	ZENER DIODE	1	
	ZD402	VZMTZJ10CT	ZENER DIODE	1	
	ZD501	VZMTZJ30DT	ZENER DIODE	1	
	ZD502	VZMTZJ30DT	ZENER DIODE	1	
	ZD503	VZMTZJ30DT	ZENER DIODE	1	
	ZD504	VZMTZJ15CT	ZENER DIODE	1	
	ZD505	VZMTZJ30DT	ZENER DIODE	1	
	ZD506	VZMTZJ18CT	ZENER DIODE	1	
	ZD507	VZMTZJ8.2CT	ZENER DIODE	1	
	ZD508	VZMTZJ15CT	ZENER DIODE	1	
	ZD509	VZMTZJ27DT	ZENER DIODE	1	
	ZD554	VZPTZ6.2BT	ZENER DIODE	1	
	ZD601	VZMTZJ5.1BT	ZENER DIODE	1	
	ZD602	VZMTZJ4.7BT	ZENER DIODE	1	
	ZD603	VZMTZJ10CT	ZENER DIODE	1	