ORDER NO. MTV1612096CE

Service Manual

LED TV

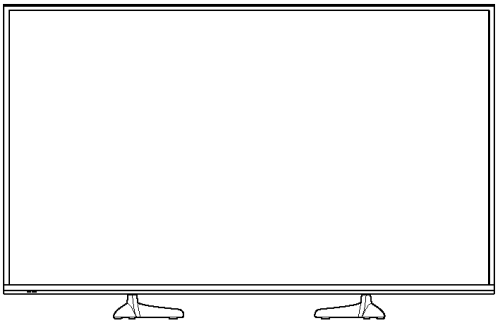

Model No. TH-55DX650R

Chassis: KM30

Destination: R : Iran

⚠ WARNING

This service information is designed for experienced repair technicians only and is not designed for use by the general public.
It does not contain warnings or cautions to advise non-technical individuals of potential dangers in attempting to service a product.
Products powered by electricity should be serviced or repaired only by experienced professional technicians. Any attempt to service or repair the product or products dealt with in this service information by anyone else could result in serious injury or death.

IMPORTANT SAFETY NOTICE

There are special components used in this equipment which are important for safety. These parts are marked by ⚠ in the Schematic Diagrams, Circuit Board Diagrams, Exploded Views and Replacement Parts List. It is essential that these critical parts should be replaced with manufacturer's specified parts to prevent shock, fire or other hazards. Do not modify the original design without permission of manufacturer.

Panasonic®

© Panasonic Corporation 2016.

TABLE OF CONTENTS

PAGE

1 Safety Precautions ----------3
1.1. General Guidelines ----------3
1.1.1. Leakage Current Cold Check ----------3
1.1.2. Leakage Current Hot Check (See Figure 1.) -----3
2 Warning ----------4
2.1. Prevention of Electrostatic Discharge (ESD) to Electrostatically Sensitive (ES) Devices ----------4
2.2. About lead free solder (PbF) ----------5
3 Service Navigation----------6
3.1. Service Hint----------6
4 Specifications ----------7
5 CS Maintenance Menu----------9
5.1. How to enter into CS Maintenance Menu----------9
5.1.1. Purpose ----------9
5.1.2. Key command ----------9
5.1.3. How to exit ----------9
5.2. Repack----------9
5.3. EDID Clock ---------- 10
5.4. USB HDD Drive Check ---------- 10
5.5. White Balance Adjustment---------- 11
5.6. System Information ---------- 12
5.6.1. How to access---------- 12
5.6.2. How to exit ---------- 12
5.7. Hotel mode---------- 13
5.7.1. Purpose ---------- 13
5.7.2. Access command to the Hotel mode setup menu---------- 13
5.7.3. To exit the Hotel mode setup menu---------- 13
5.7.4. Explain the Hotel mode setup menu---------- 13
5.8. Data Copy by USB Memory ---------- 14
5.8.1. Purpose ---------- 14
5.8.2. Preparation---------- 14
5.8.3. Data copy from TV set to USB Memory ------- 15
5.8.4. Data copy from USB Memory to TV set ------- 16
6 Troubleshooting Guide---------- 17
6.1. Check of the IIC bus lines---------- 17
6.1.1. How to access---------- 17
6.1.2. Screen display ---------- 17
6.1.3. Check Point ---------- 17
6.1.4. Exit ---------- 17
6.2. Power LED Blinking timing chart ---------- 18
6.3. LCD Panel test mode ---------- 18
7 Disassembly and Assembly Instructions ---------- 19
7.1. Bottom Mtg---------- 19
7.2. VESA & LED Panel---------- 20
7.3. PCB Install ---------- 21
7.4. Key Btn & Speaker---------- 22
7.5. WiFi Installation---------- 23
7.6. Screw Fixing---------- 24
7.7. Bottom Back Cover ---------- 25
7.8. Back Cover Installation ---------- 26
8 Measurements and Adjustments ---------- 27
8.1. Voltage chart of A-board---------- 27
8.2. Voltage chart of P-board---------- 27
9 Block Diagram ---------- 28
10 Wiring Connection Diagram ---------- 29
10.1. Wire Dressing -1---------- 29
10.2. Wire Dressing -2---------- 32

PAGE

11 Schematic Diagram ---------- 33
12 Printed Circuit Board---------- 34
13 Exploded View and Replacement Parts List---------- 35

1 Safety Precautions

1.1. General Guidelines

1. When servicing, observe the original lead dress. If a short circuit is found, replace all parts which have been overheated or damaged by the short circuit.
2. After servicing, see to it that all the protective devices such as insulation barriers, insulation papers shields are properly installed.
3. After servicing, make the following leakage current checks to prevent the customer from being exposed to shock hazards.
4. When conducting repairs and servicing, do not attempt to modify the equipment, its parts or its materials.
5. When wiring units (with cables, flexible cables or lead wires) are supplied as repair parts and only one wire or some of the wires have been broken or disconnected, do not attempt to repair or re-wire the units. Replace the entire wiring unit instead.
6. When conducting repairs and servicing, do not twist the Faston connectors but plug them straight in or unplug them straight out.

1.1.1. Leakage Current Cold Check

1. Unplug the AC cord and connect a jumper between the two prongs on the plug.
2. Measure the resistance value, with an ohmmeter, between the jumpered AC plug and each exposed metallic cabinet part on the equipment such as screwheads, connectors, control shafts, etc. When the exposed metallic part has a return path to the chassis, the reading should be 8.5Mohm to 13Mohm.
   When the exposed metal does not have a return path to the chassis, the reading must be ∞.

1.1.2. Leakage Current Hot Check (See Figure 1.)

1. Plug the AC cord directly into the AC outlet. Do not use an isolation transformer for this check.
2. Connect a 1.5kohm, 10 watts resistor, in parallel with a 0.15µF capacitors, between each exposed metallic part on the set and a good earth ground such as a water pipe, as shown in Figure 1.
3. Use an AC voltmeter, with 1000 ohms/volt or more sensitivity, to measure the potential across the resistor.
4. Check each exposed metallic part, and measure the voltage at each point.
5. Reverse the AC plug in the AC outlet and repeat each of the above measurements.
6. The potential at any point should not exceed 0.75 volts RMS. A leakage current tester (Simpson Model 229 or equivalent) may be used to make the hot checks, leakage current must not exceed 1/2 milliamp. In case a measurement is outside of the limits specified, there is a possibility of a shock hazard, and the equipment should be repaired and rechecked before it is returned to the customer.

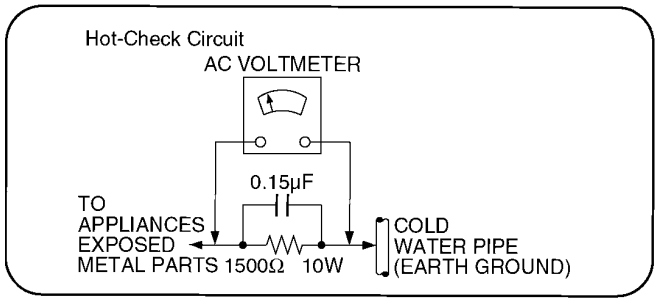

Figure 1

2 Warning

2.1. Prevention of Electrostatic Discharge (ESD) to Electrostatically Sensitive (ES) Devices

Some semiconductor (solid state) devices can be damaged easily by static electricity. Such components commonly are called Electrostatically Sensitive (ES) Devices. Examples of typical ES devices are integrated circuits and some field-effect transistors and semiconductor [chip] components. The following techniques should be used to help reduce the incidence of component damage caused by electrostatic discharge (ESD).

1. Immediately before handling any semiconductor component or semiconductor-equipped assembly, drain off any ESD on your body by touching a known earth ground. Alternatively, obtain and wear a commercially available discharging ESD wrist strap, which should be removed for potential shock reasons prior to applying power to the unit under test.
2. After removing an electrical assembly equipped with ES devices, place the assembly on a conductive surface such as aluminum foil, to prevent electrostatic charge buildup or exposure of the assembly.
3. Use only a grounded-tip soldering iron to solder or unsolder ES devices.
4. Use only an anti-static solder removal device. Some solder removal devices not classified as [anti-static (ESD protected)] can generate electrical charge sufficient to damage ES devices.
5. Do not use freon-propelled chemicals. These can generate electrical charges sufficient to damage ES devices.
6. Do not remove a replacement ES device from its protective package until immediately before you are ready to install it. (Most replacement ES devices are packaged with leads electrically shorted together by conductive foam, aluminum foil or comparable conductive material).
7. Immediately before removing the protective material from the leads of a replacement ES device, touch the protective material to the chassis or circuit assembly into which the device will be installed.

   Caution

   Be sure no power is applied to the chassis or circuit, and observe all other safety precautions.
8. Minimize bodily motions when handling unpackaged replacement ES devices. (Otherwise harmless motion such as the brushing together of your clothes fabric or the lifting of your foot from a carpeted floor can generate static electricity (ESD) sufficient to damage an ES device).

2.2. About lead free solder (PbF)

Note: Lead is listed as (Pb) in the periodic table of elements.
In the information below, Pb will refer to Lead solder, and PbF will refer to Lead Free Solder.
The Lead Free Solder used in our manufacturing process and discussed below is (Sn+Ag+Cu).
That is Tin (Sn), Silver (Ag) and Copper (Cu) although other types are available.

This model uses Pb Free solder in it's manufacture due to environmental conservation issues. For service and repair work, we'd suggest the use of Pb free solder as well, although Pb solder may be used.

PCBs manufactured using lead free solder will have the PbF within a leaf Symbol **PbF** stamped on the back of PCB.

Caution

- Pb free solder has a higher melting point than standard solder. Typically the melting point is 50 ~ 70 °F (30~40 °C) higher. Please use a high temperature soldering iron and set it to 700 ± 20 °F (370 ± 10 °C).
- Pb free solder will tend to splash when heated too high (about 1100 °F or 600 °C).
  If you must use Pb solder, please completely remove all of the Pb free solder on the pins or solder area before applying Pb solder. If this is not practical, be sure to heat the Pb free solder until it melts, before applying Pb solder.
- After applying PbF solder to double layered boards, please check the component side for excess solder which may flow onto the opposite side. (see figure below)

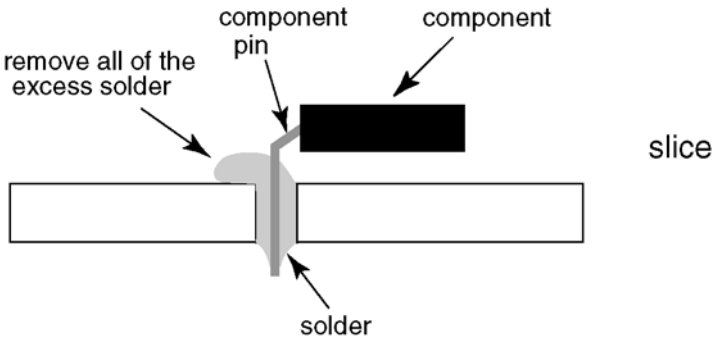

3 Service Navigation

3.1. Service Hint

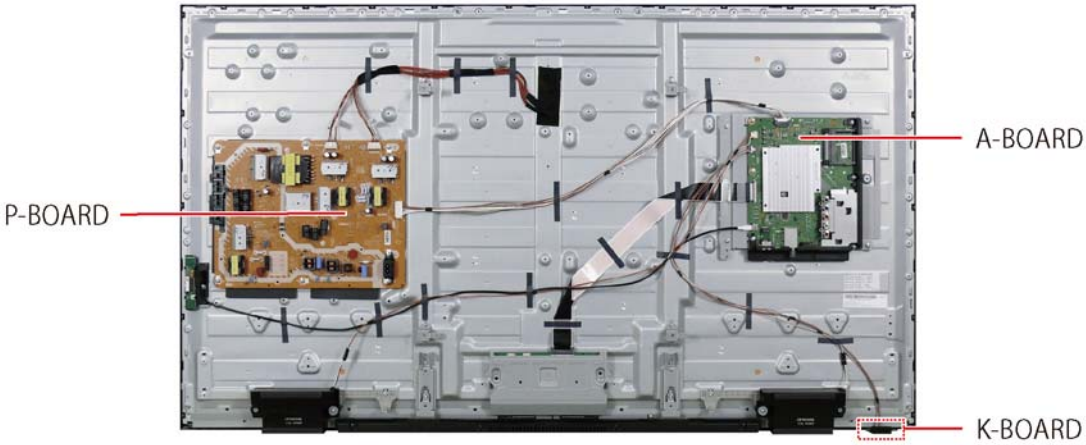

Board Name	Main Device	Remarks
A BOARD	Main(MTK IC)	Repairable
P BOARD	Power Supply, Switch	Repairable
K BOARD	LED/ RM/ CATS	Repairable

4 Specifications

Dimensions (W × H × D)	1 244 mm × 776 mm × 364 mm (With Pedestal)	
	1 244 mm × 723 mm × 69 mm (TV only)	
Mass	20.0 kg Net (With Pedestal)	
	18.0 kg Net (TV only)	
Power source	AC 220-240 V, 50 / 60 Hz	
Rated power consumption	182 W	
Standby power consumption	0.50 W	
Visible screen size (diagonal)	139 cm	
Display resolution	3 840 (W) × 2 160 (H)	
Panel	LED backlight Liquid Crystal Display	
Speaker output	20 W (10 W + 10 W)	
Connection terminals		
AV IN	**VIDEO**	RCA PIN Type × 1 1.0 V[p-p] (75 Ω)
(COMPONENT / VIDEO)	**AUDIO L - R**	RCA PIN Type × 2 0.5 V[rms]
	Y	1.0 V[p-p] (including synchronisation)
	P_B/C_B, P_R/C_R	±0.35 V[p-p]
HDMI 1 / 2 / 3 input	TYPE A Connectors	
	HDMI1 / 3: 4K, Content Type, Deep Colour, x.v.Colour™	
	HDMI2: 4K, Content Type, Audio Return Channel, Deep Colour, x.v.Colour™	
	• This TV supports ‘HDAVI Control 5’ function.	
ETHERNET	10BASE-T / 100BASE-TX	
USB 1 / 2	USB1: DC 5 V, Max. 500 mA [Hi-Speed USB (USB 2.0)]	
	USB2: DC 5 V, Max. 900 mA [SuperSpeed USB (USB 3.0)]	
DIGITAL AUDIO OUT	PCM / Dolby Digital / Fibre optic	

Receiving systems / Band name

	17 SYSTEMS	FUNCTION
1	PAL B, G, H	Reception of broadcast transmissions and Playback from Video Cassette Tape Recorders
2	PAL I	
3	PAL D, K	
4	SECAM B, G	
5	SECAM D, K	
6	SECAM K1	
7	NTSC M (NTSC 3.58 / 4.5 MHz)	
8	NTSC 4.43 / 5.5 MHz	Playback from Special VCR’s or DVD
9	NTSC 4.43 / 6.0 MHz	
10	NTSC 4.43 / 6.5 MHz	
11	NTSC 3.58 / 5.5 MHz	
12	NTSC 3.58 / 6.0 MHz	
13	NTSC 3.58 / 6.5 MHz	
14	SECAM I	
15	PAL 60 Hz / 5.5 MHz	Playback from Special Disc Players and Special VCR’s or DVD
16	PAL 60 Hz / 6.0 MHz	
17	PAL 60 Hz / 6.5 MHz	

Digital TV	7 MHz VHF / 8 MHz UHF free-to-air TV broadcast reception	
Receiving channels (Analogue TV)		
VHF BAND	2 - 12	(PAL / SECAM B, K1)
	0 - 12	(PAL B AUST.)
	1 - 9	(PAL B N.Z.)
	1 - 12	(PAL / SECAM D)
	1 - 12	(NTSC M Japan)
	2 - 13	(NTSC M USA)
UHF BAND	21 - 69	(PAL G, H, I / SECAM G, K, K1)
	28 - 69	(PAL B AUST.)
	13 - 57	(PAL D, K)
	13 - 62	(NTSC M Japan)
	14 - 69	(NTSC M USA)
CATV	S1 - S20	(OSCAR)
	1 - 125	(USA CATV)
	C13 - C49	(JAPAN)
	S21 - S41	(HYPER)
	Z1 - Z37	(CHINA)
	5A, 9A	(AUST.)
Aerial input	VHF / UHF	

Operating Conditions	**Temperature :** 0°C - 40°C **Humidity :** 20 % - 80 % RH (non-condensing)
Built-in wireless LAN	**Standard compliance and Frequency range*** IEEE802.11a/n 5.15 GHz -5.35 GHz, 5.47 GHz -5.85 GHz IEEE802.11b/g/n 2.400 GHz -2.4835 GHz **Security** WPA2-PSK (TKIP/AES) WPA-PSK (TKIP/AES) WEP (64 bit/128 bit)

*: The frequency and channel differ depending on the country.

Note

- Design and Specifications are subject to change without notice. Mass and Dimensions shown are approximate.
- For information about the open source software, refer to [eHELP] (Support > Licence).

5 CS Maintenance Menu

5.1. How to enter into CS Maintenance Menu

5.1.1. Purpose

After exchange parts, check and adjust the contents of adjustment mode.

While pressing [VOLUME (-)] button of the main unit, press [RED] button of the remote control three times within 2 seconds.

Note:

CS Maintenance Menu can not be entered when 3D signal input.
Input 2D signal to enter CS Maintenance Menu.

CS Maintenance Menu	
OPT	
EDID CLK	
DRV CHECK	
WB-ADJ	

5.1.2. Key command

Press the Cursor key [Up/Down] on the remote control to select the functions.

5.1.3. How to exit

Press the [EXIT] button on the remote control.

5.2. Repack

1. Select [OPT] in CS Maintenance Menu.
2. Press [OK] button or Cursor key [Right] on the remote control.

CS Maintenance Menu			
OPT		7 6 5 4 3 2 1 0	
EDID CLK	OPT1	0 0 0 $\boxed{0}$ 0 1 0 1	row : OPT1
DRV CHECK	OPT2	1 1 1 0 1 1 1 0	column : 4
	OPT3	0 0 0 0 0 0 0 1	0 : Automatic (Default)
	OPT4	0 0 0 0 0 0 1 0	1 : Manual
WB-ADJ			

Exit:

Press the [Exit] button or the [Return] button on the remote control.

5.3. EDID Clock

1. Select [EDID CLK] in CS Maintenance Menu.
2. Press [OK] button or Cursor key [Right] on the remote control.

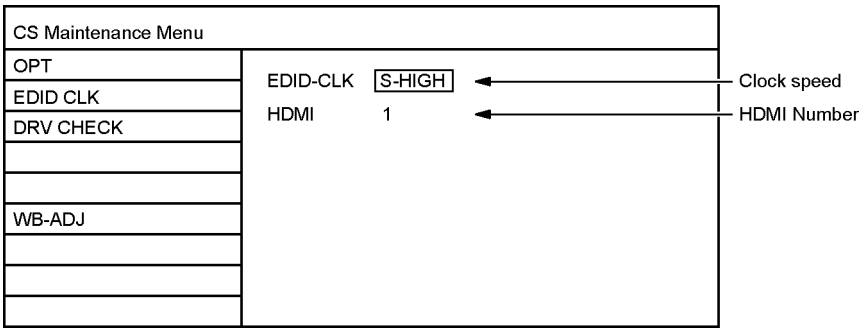

Exit:

Press the [Exit] button or the [Return] button on the remote control.

5.4. USB HDD Drive Check

1. Select [DRV CHECK] in CS Maintenance Menu.
2. Press [OK] button or Cursor key [Right] on the remote control.

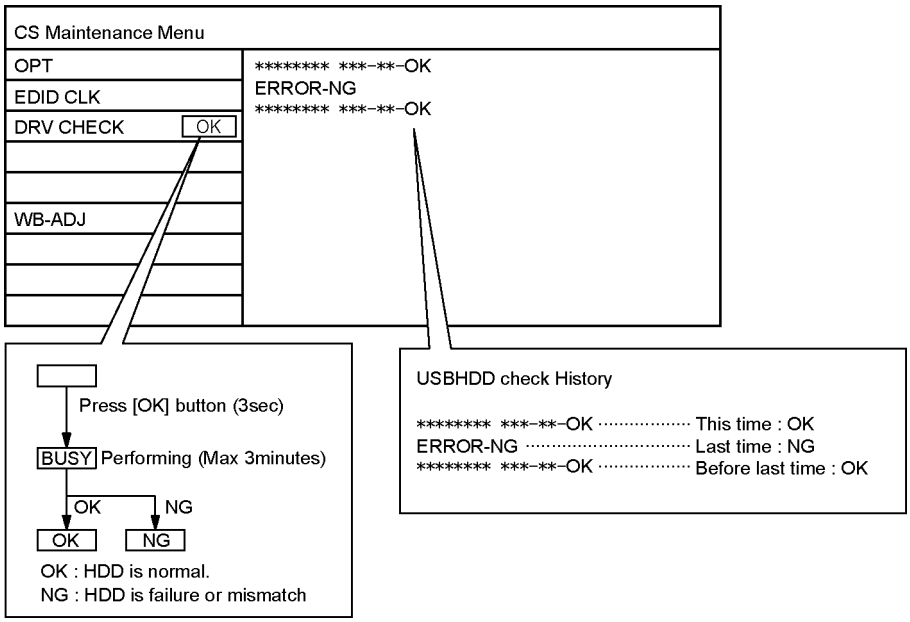

Exit:

Press the [Return] button on the remote control.

5.5. White Balance Adjustment

After LCD PANEL or A-Board is replaced and repaired, perform [White balance adjustment] in case of necessity for test / check ([White balance adjustment] is not required basically).

1. Select [W/B ADJ] in CS Maintenance Menu.
2. Press [OK] button on the remote control.

   Note for performing [White balance adjustment]

   Make a note for the setting values before changing if the settings of [R-GAIN], [B-GAIN] and [G-GAIN] in [WB-ADJ] will be changed.
3. Press the cursor key [Up/Down] on the remote control to change the data value, and press [OK] button on the remote control to store the value for this model.

• COLOR TEMP : Press the [Option] button of the remote control to change the color temperature. (COOL/NORMAL/WARM/TUNNIG)

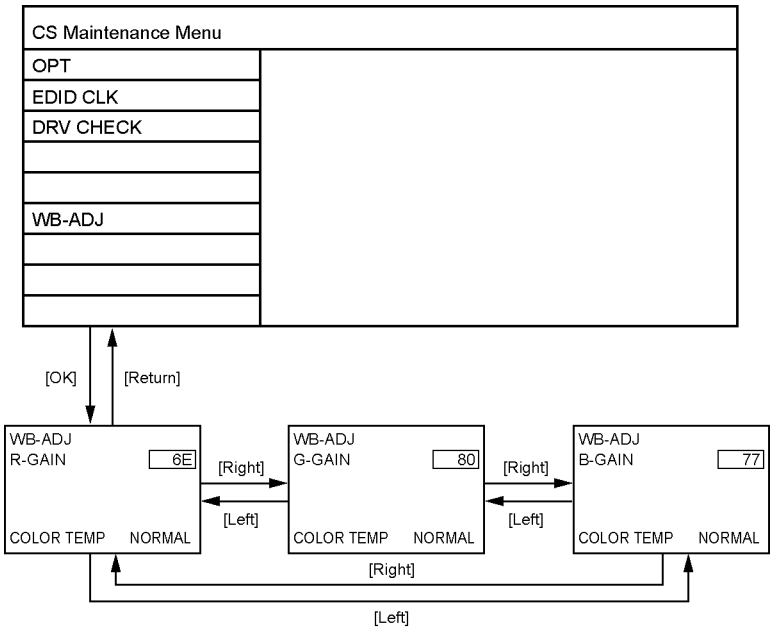

Exit:

Press the [Return] button on the remote control.

5.6. System Information

5.6.1. How to access

1. While pressing [MENU] button on the remote control.
2. To select [? Help] and then to select [System Information].

Example:

System Information			
SW version	3001-10000-abcde	3001 10000 abcde	Peaks SW GenX Main GenX Sub (optional)
Status1	0c 8801-0003 0080-0000	0c 8801-0003 0080-0000	Outer model ID Inner model ID Panel inch size
Status2	0008-008-000fac	0008 008 000fac	LSI Package LSI Release Model data version
Status3	00-000000-F000	00 00 00 00 F000	Number of bad block in NAND Flash (dec) Peaks reboot counter System crash counter Emergency (SOS) counter Peaks NAND Maker ID
Status4	A00000-0000003-00000	A 00000 0000003 00000	Power-On period (A <= 100hrs, B <= 200hrs, C > 200hrs) Total Power-On time (dec, max is 65535) Power-On timer (dec, max is 1048575) Fixed (always)
Status5	00000-10000 15e010ff	0 0 0 0 0 1 0000 15e010ff	SOS history (latest) SOS history (last time) SOS history (last but one) SOS history (2nd time after shipping) SOS history (1st time after shipping) Self-check _0-never selfcheck 1-production selfcheck by "FF" or USCM 2-user selfcheck by pressing "OK" Fixed (always) Panel ID
Status6	01010010-1000009	01010010 1000009	Peaks EEPROM version STM EEPROM version
Status7	00000-0741	00000 0741	STM ROMCOR version AJAX_CE version
HDAVI Control	5		VIERA Link version is displayed

Note:
Latest software version may differ from figure shown above.

5.6.2. How to exit

Press the [RETURN] button on the remote control.

5.7. Hotel mode

5.7.1. Purpose

Restrict a function for hotels.

5.7.2. Access command to the Hotel mode setup menu

In order to display the Hotel mode setup menu,
please enter the following command (within 2 seconds).
[TV]: Vol.[Down] + [REMOTE] : AV (3 times)

Then, the Hotel mode setup menu is displayed.
Example:

Hotel Mode	
Hotel Mode	Off
Initial INPUT	Off
Initial POS	Off
Initial VOL Level	Off
Maximum VOL Level	100
Button Lock	Off
Remote Lock	Off
Private Information	Keep

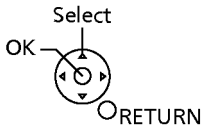

Note:
Latest software version may differ from figure shown above.

5.7.3. To exit the Hotel mode setup menu

Switch off the power with the [POWER] button on the main unit or the [POWER] button on the remote control.

5.7.4. Explain the Hotel mode setup menu

Item	Function
Hotel Mode	Select hotel mode On/Off
Initial INPUT	Select input signal modes. Set the input, when each time power is switched on. Selection : Off, Analogue TV, Digital TV, AV, HDMI1, HDMI2, HDMI3 • Off: give priority to a last memory.
Initial POS	Select programme number. Selection : Off/0 to 99 • Off: give priority to a last memory
Initial VOL Level	Adjust the volume when each time power is switched on. Selection/Range : Off/0 to 100 • Off: give priority to a last memory
Maximum VOL Level	Adjust maximum volume. Range : 0 to 100
Button Lock	Select local key conditions. Selection : Off/SETUP/MENU • Off: altogether valid • SETUP: only F-key is invalid (Tuning guide (menu) can not be selected.) • MENU: only F-key is invalid (only Volume/Mute can be selected.)
Remote Lock	Select remote control key conditions. Selection : Off/SETUP/MENU • Off: altogether valid • SETUP: only Setup menu is invalid • MENU: Picture/Sound/Setup menu are invalid
Private Information	Select private information for VIERA Cast is Keep or Reset if Hotel mode is set to [On] when TV power on. Selection : Keep/Reset • Keep: private information for VIERA Cast is keep • Reset: private information for VIERA Cast is reset

5.8. Data Copy by USB Memory

Note:

SD card can not be used for Data Copy.

5.8.1. Purpose

(a) Board replacement (Copy the data when exchanging A-board):

When exchanging A-board, the data in original A-board can be copied to USB Memory and then copy to new A-board.

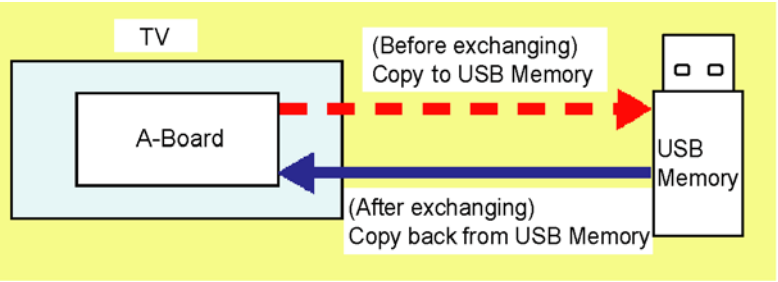

Following data can be copied.
User setting data
(incl. Hotel mode setting data)
Channel scan data
Adjustment and factory preset data

(b) Hotel (Copy the data when installing a number of units in hotel or any facility):

When installing a number of units in hotel or any facility, the data in master TV can be copied to USB Memory and then copy to other TVs.

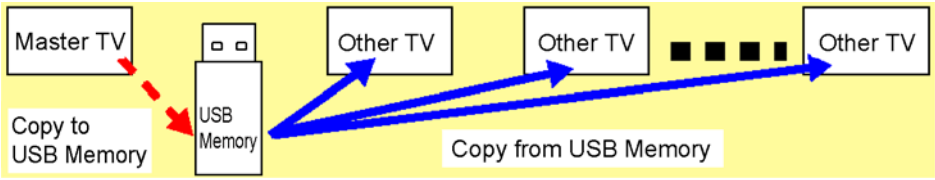

Following data can be copied.
User setting data
(incl. Hotel mode setting data)
Channel scan data

5.8.2. Preparation

Make pwd file as startup file for (a) or (b) in a empty USB Memory.

1. Insert a empty USB Memory to your PC.
2. Right-click a blank area in a USB Memory window, point to New, and then click text document. A new file is created by default (New Text Document.txt).
3. Right-click the new text document that you just created and select rename, and then change the name and extension of the file to the following file name for (a) or (b) and press ENTER.

File name:

(a) For Board replacement : boardreplace.pwd

(b) For Hotel : hotel.pwd

Note:

Please make only one file to prevent the operation error.

No any other file should not be in USB Memory.

5.8.3. Data copy from TV set to USB Memory

1. Turn on the TV set.
2. Insert USB Memory with a startup file (pwd file) to USB terminal.
   On-screen Display will be appeared according to the startup file automatically.
3. Input a following password for (a) or (b) by using remote control.
   (a) For Board replacement : 2770
   (b) For Hotel : 4850
   Data will be copied from TV set to USB Memory.
   It takes around 2 to 6 minutes maximum for copying.
4. After the completion of copying to USB Memory, remove USB Memory from TV set.
5. Turn off the TV set.

Note:

Following new folder will be created in USB Memory for data from TV set.
(a) For Board replacement : user_setup
(b) For Hotel : hotel

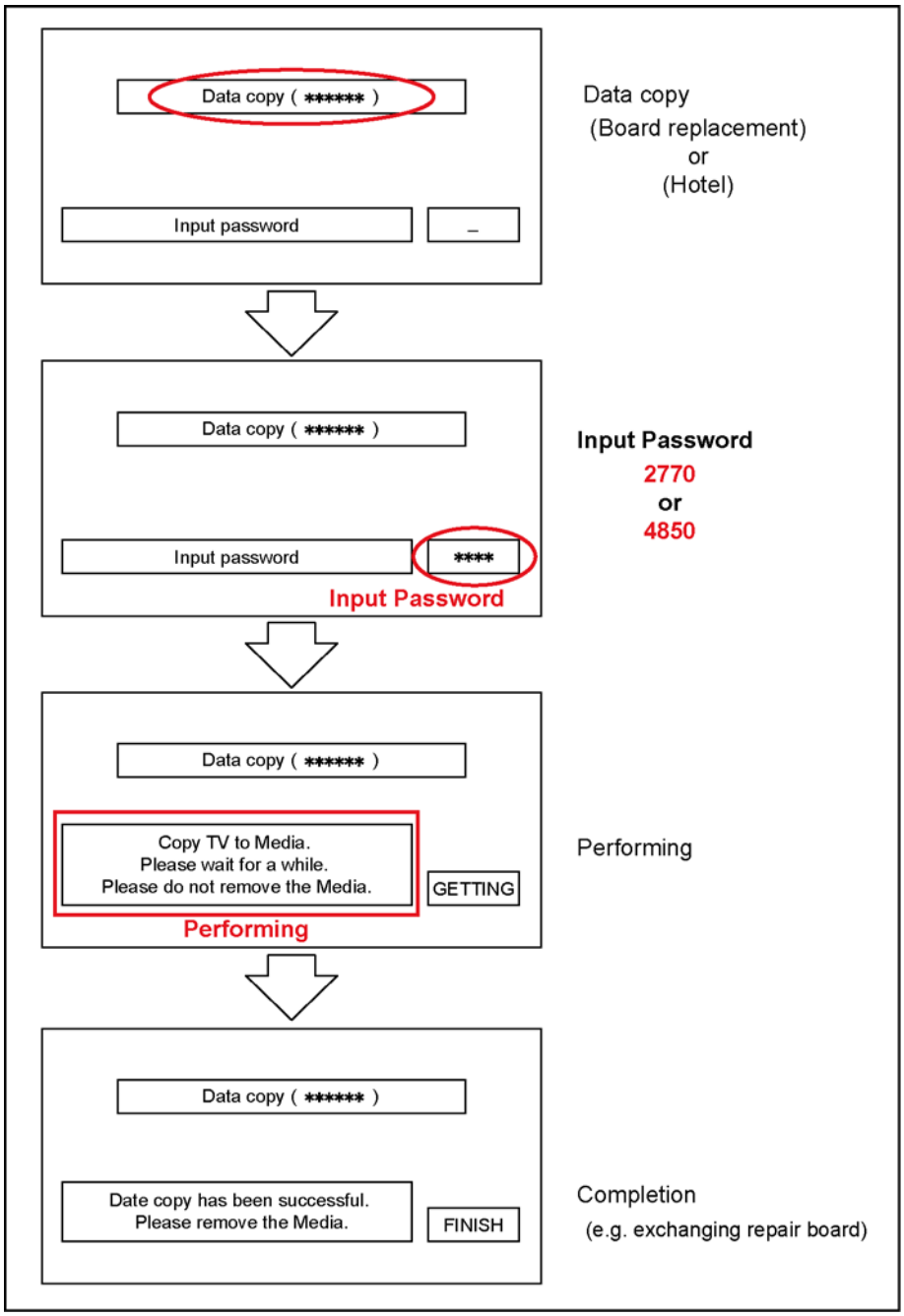

5.8.4. Data copy from USB Memory to TV set

1. Turn on the TV set.
2. Insert USB Memory with Data to USB terminal.
   On-screen Display will be appeared according to the Data folder automatically.
3. Input a following password for (a) or (b) by using remote control.
   (a) For Board replacement : 2771
   (b) For Hotel : 4851
   Data will be copied from USB Memory to TV set.
4. After the completion of copying to USB Memory, remove USB Memory from TV set.
   (a) For Board replacement : Data will be deleted after copying (Limited one copy).
   (b) For Hotel : Data will not be deleted and can be used for other TVs.
5. Turn off the TV set.

Note:

1. Depending on the failure of boards, function of Data copy for board replacement does not work.
2. This function can be effective among the same model numbers.

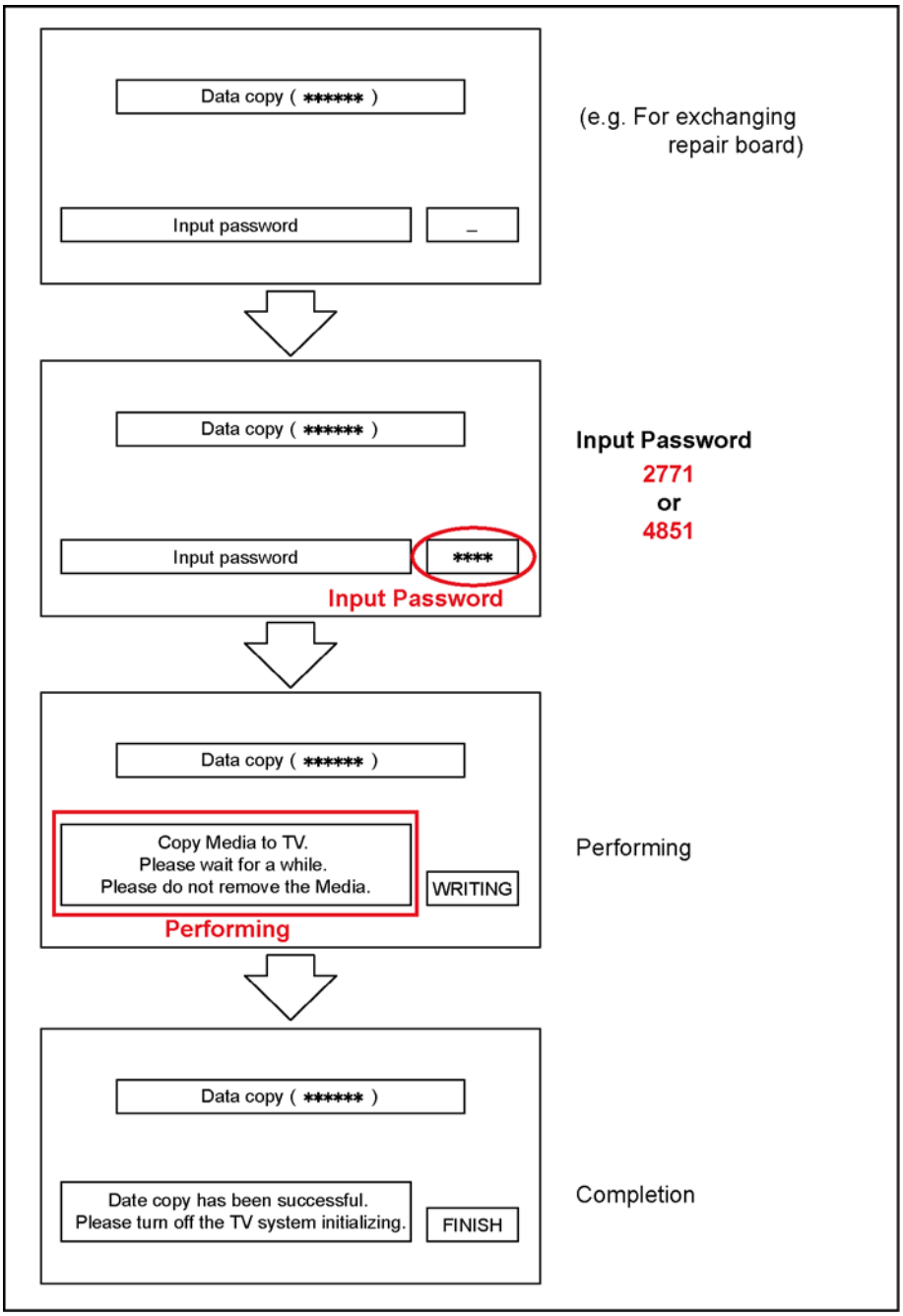

6 Troubleshooting Guide

Use the self-check function to test the unit.

1. Checking the IIC bus lines
2. Power LED Blinking timing

6.1. Check of the IIC bus lines

6.1.1. How to access

6.1.1.1. Self-check indication only:

Produce TV reception screen, and while pressing [VOLUME (-)] button on the main unit, press [BLUE] button on the remote control for more than 3 seconds.

6.1.1.2. Self-check indication and forced to factory shipment setting:

Produce TV reception screen, and while pressing [VOLUME (-)] button on the main unit, press [MENU] button on the remote control for more than 3 seconds.

6.1.2. Screen display

Example

```
55
                    SELF CHECK COMPLETE

H14TUN      OK     PEAKS-SOFT        *. ***
H38FRC      OK     PEAKS-EEP      **. **. ****
H17LAN      OK     LSI-PACKAGE       *. ***
H96ID       OK     LSI-RELEASE        *. **
H97ID2      OK     STBY-SOFT       *. **. **
H42WiFi     OK     STBY-EEP      *. **. ****
                   FRC SOFT        ********
                   FRC DATA        ********

                                MODEL ID        **
                                            ********
                                            ********
```

6.1.3. Check Point

Confirm the following parts if NG was displayed.

DISPLAY	Check Ref. No.	Description	Check Point
H14TUN	IC6950	TUNER	A-BOARD
H38FRC		FRC	LCD PANEL
H17LAN		ETHERNET	A-BOARD / LAN
H96ID		ID	A-BOARD
H97ID2		ID2	A-BOARD
H42WiFi		WiFi	A-BOARD / WiFi

6.1.4. Exit

Disconnect the AC cord from wall outlet or press the [POWER] button on the main unit for 3 seconds to turn off and then turn on automatically.

6.2. Power LED Blinking timing chart

1. Subject
   Information of LED Flashing timing chart.
2. Contents
   When an abnormality has occurred the unit, the protection circuit operates and reset to the stand by mode. At this time, the defective block can be identified by the number of blinks of the Power LED on the front panel of the unit.

Blinking Times	Contents	Check point
1	BL SOS	LCD PANEL P-Board
7	SUB 3.3V / 1.0V	P-Board A-Board
9	SOUND SOS	A-Board Speaker
10	FRC/NVT SOS	A-Board
13	EMERGENCY SOS	A-Board

6.3. LCD Panel test mode

Purpose:

To find the possible failure point where in LCD Panel or Printed Circuit Board when the abnormal picture is displayed.

How to Enter:

While pressing [VOLUME (-)] button of the main unit, press [YELLOW] button of the remote control three times within 2 seconds.

How to Exit:

Switch off the power with the [POWER] button on the main unit or the [POWER] button on the remote control.

How to confirm:

If the abnormal picture is displayed, go into LCD Panel test mode to display the several test patterns.
And then, judge by the following method.
Still abnormal picture is displayed: The cause must be in LCD Panel.
Normal picture is displayed: The cause must be in A board.

Remarks:

The test pattern is created by the circuit in LCD Panel.
In LCD Panel test mode, this test pattern is displayed unaffected by signal processing for RF or input signal.
If the normal picture is displayed, LCD Panel must be okay and the cause of failure must be in A board.

7 Disassembly and Assembly Instructions

7.1. Bottom Mtg

1. Fix PCB barrier.
2. Fix Bottom mtg.

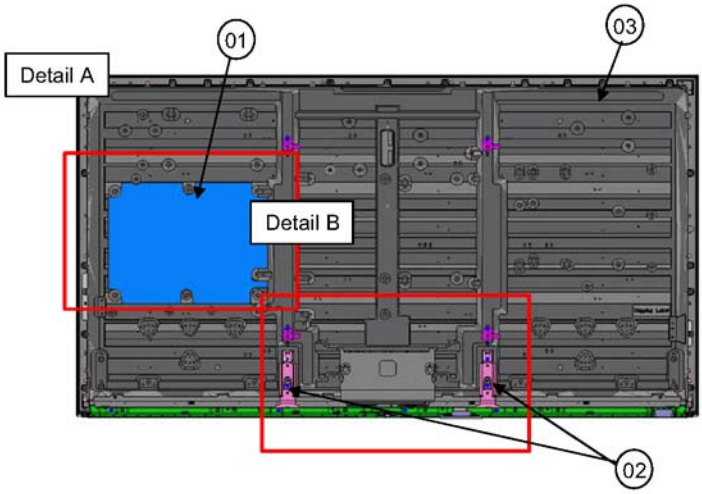

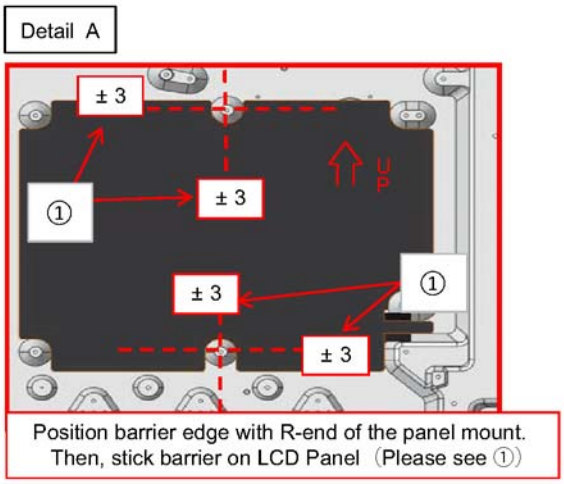

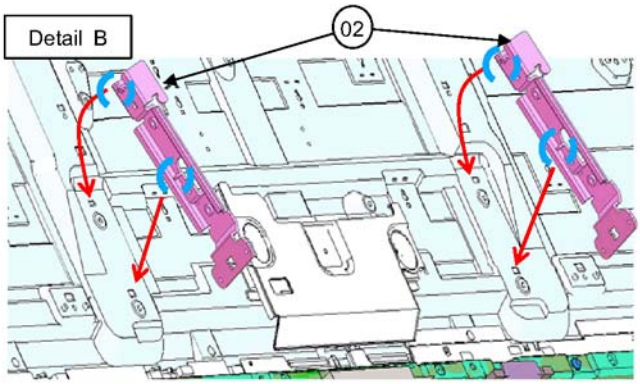

No	Description	Qty	UOM	Remarks
01	P-PCB_BARRIER	1	PC	
02	BOTTOM_METAL	2	PC	
03	LCD_PANEL	1	PC	

7.2. VESA & LED Panel

1. Fix vesa metal, LED PANEL.

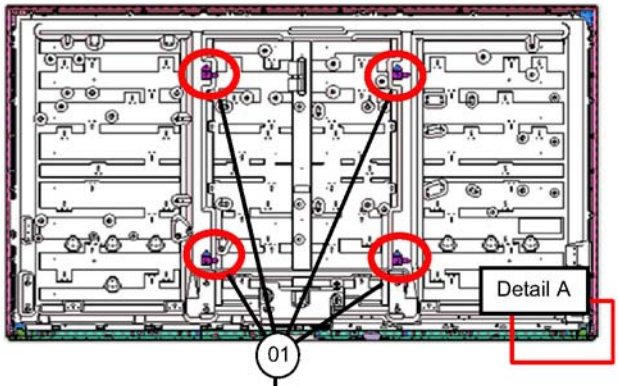

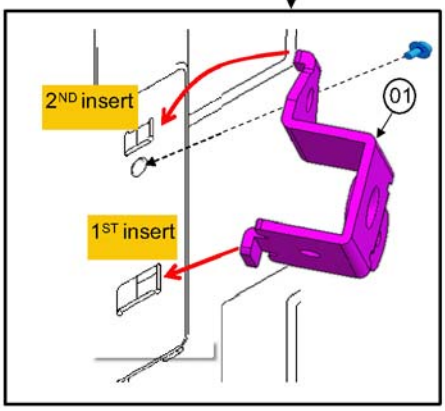

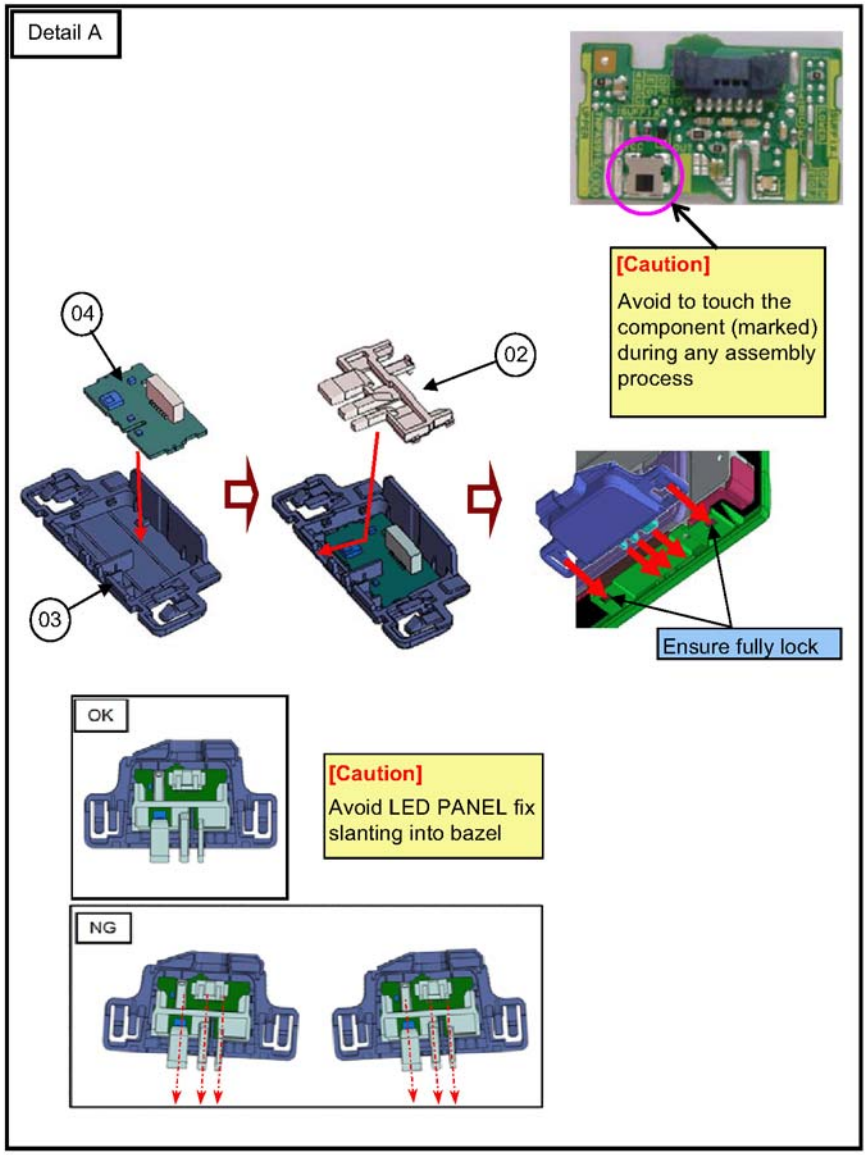

No	Description	Qty	UOM	Remarks
01	VESA_METAL	4	PC	
02	LED_PANEL	1	PC	
03	LED_PANEL_CASE	1	PC	
04	K-BOARD	1	PC	

7.3. PCB Install

1. Fix All PCB.

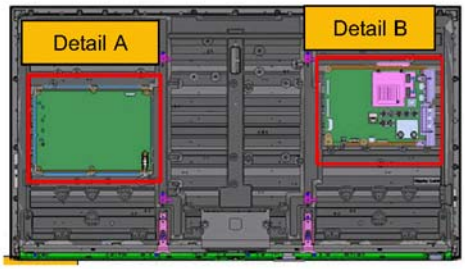

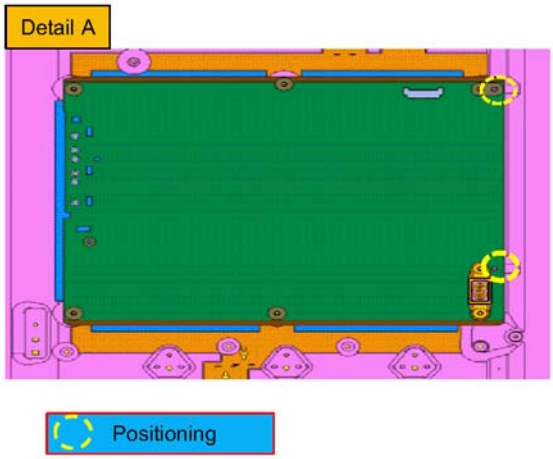

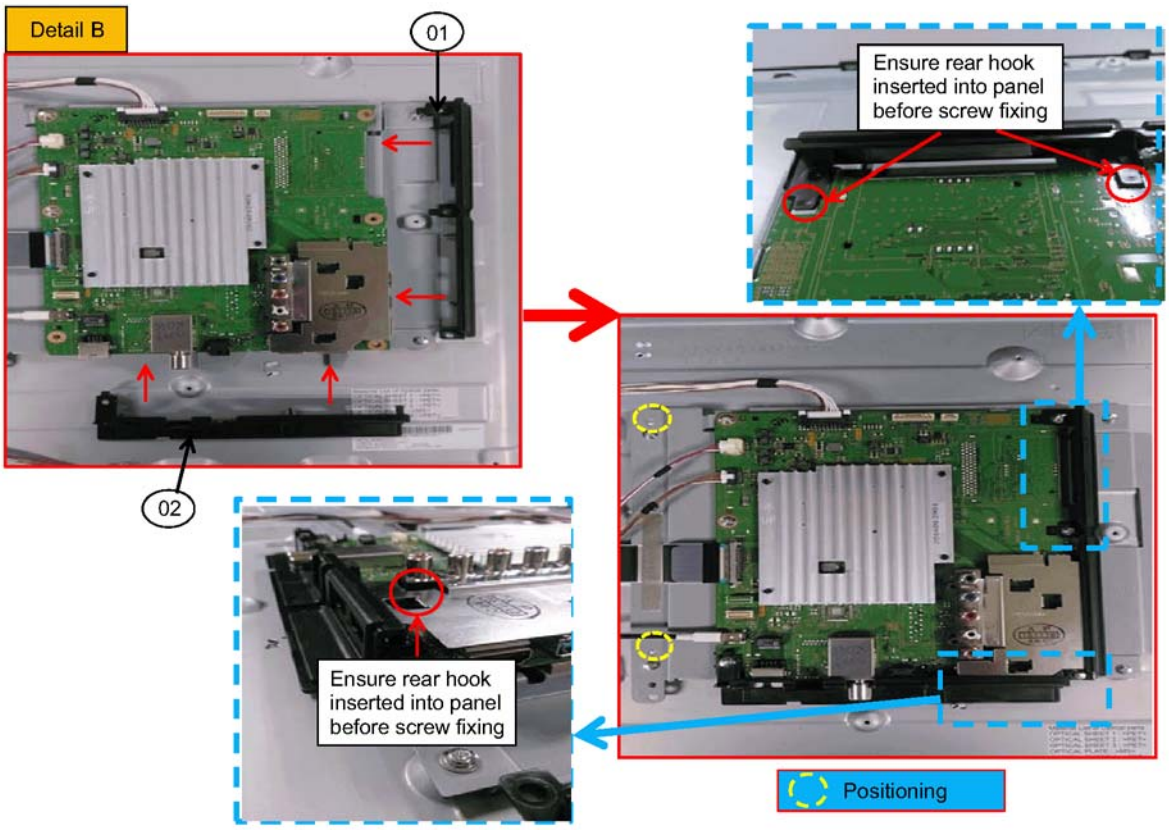

No	Description	Qty	UOM	Remarks
01	SIDE_AV_BRACKET	1	PC	
02	BOTTOM_AV_BRACKET	1	PC	

7.4. Key Btn & Speaker

1. Fix Key Button Bracket.
2. Fix speaker bracket & speaker L & R.

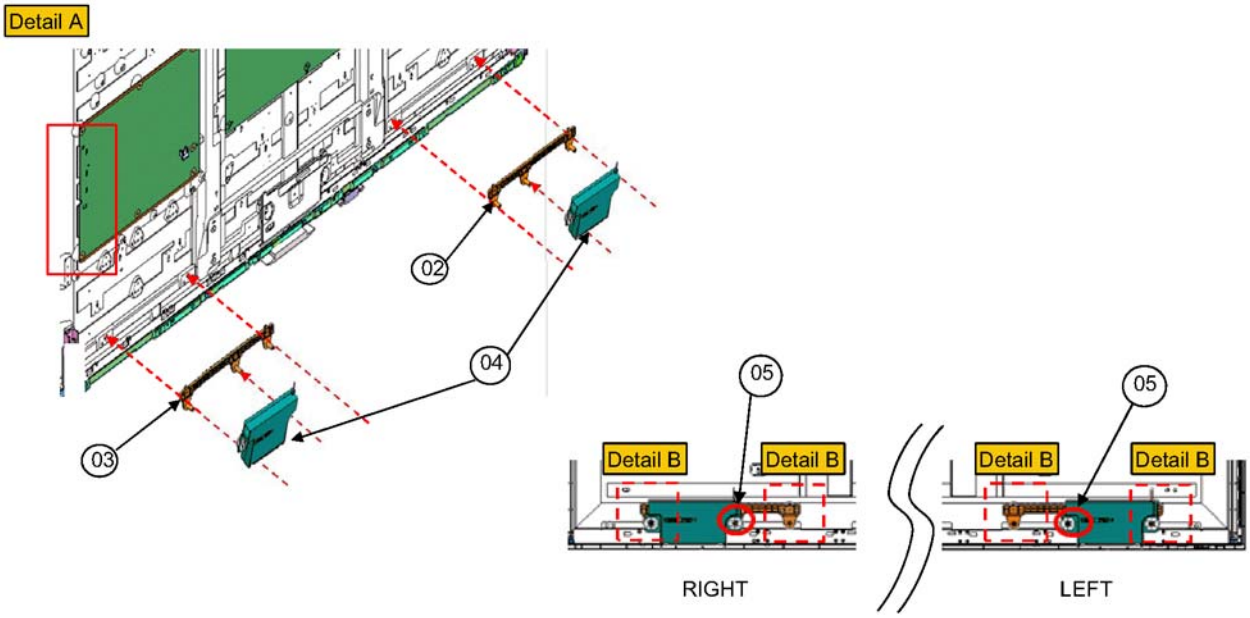

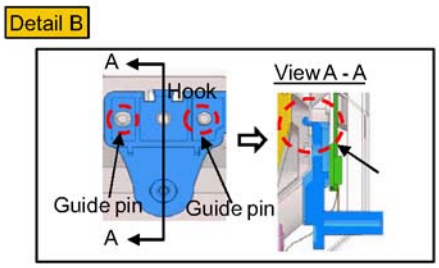

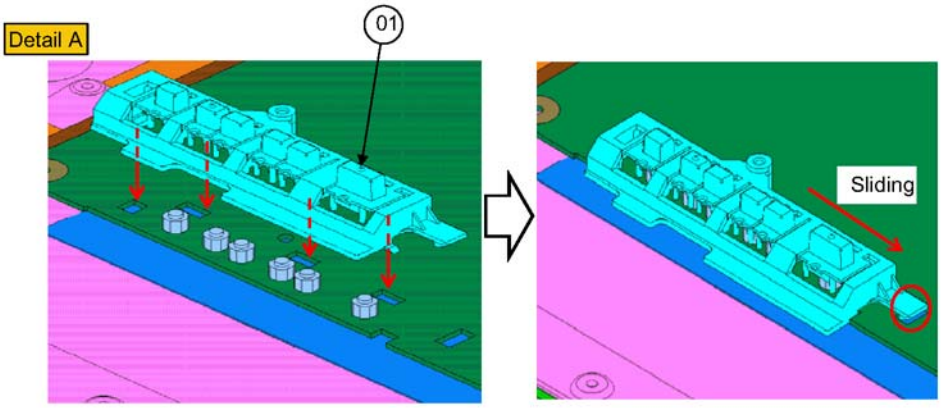

No	Description	Qty	UOM	Remarks
01	KEY_BUTTON_BRACKET	1	PC	
02	SP_BRACKET_LOWER_L	1	PC	
03	SP_BRACKET_LOWER_R	1	PC	
04	SPEAKER_L/R	2	PC	
05	SCREW(SP2)	2	PC	6±1kgf.cm

7.5. WiFi Installation

1. Fix Wifi bracket.

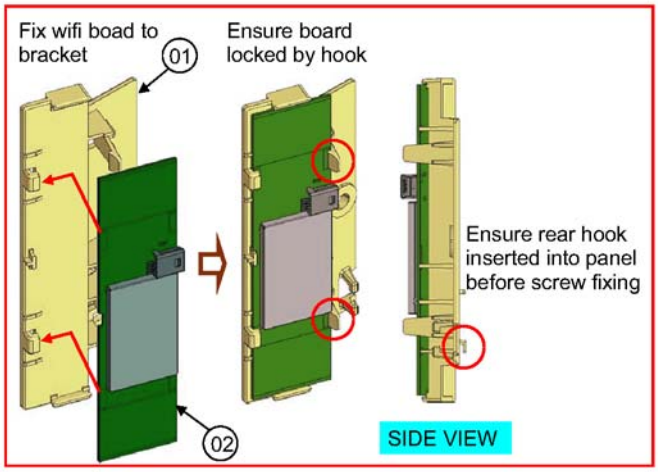

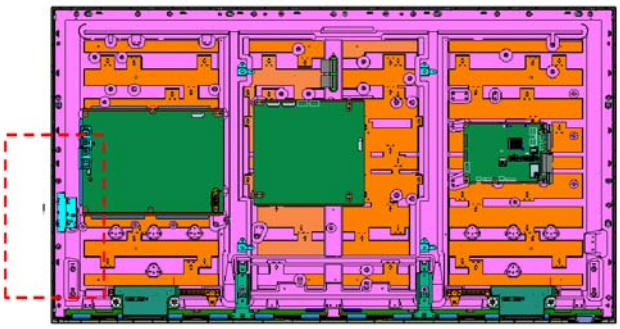

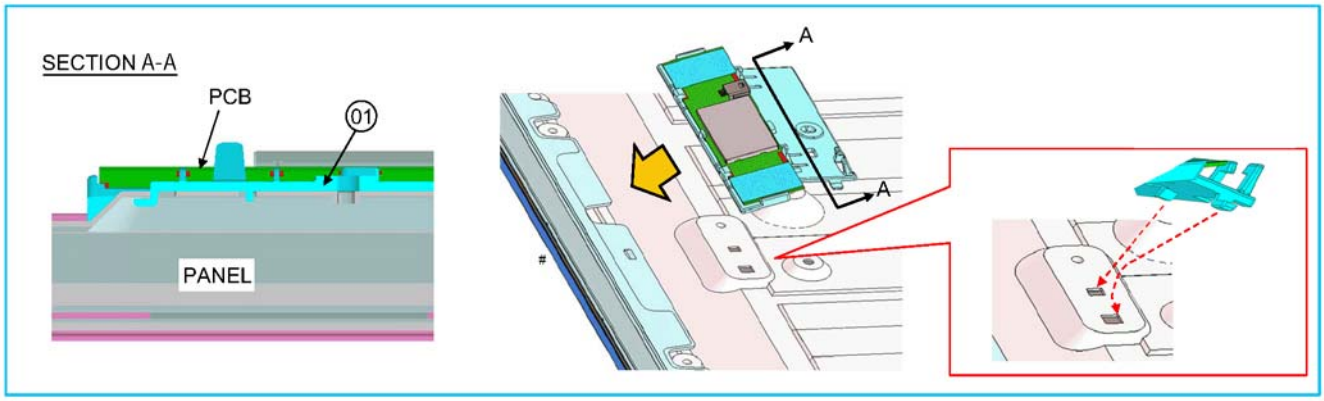

No	Description	Qty	UOM	Remarks
01	WIFI_BRACKET	1	PC	
02	WIFI_MODULE	1	PC	

7.6. Screw Fixing

1. Fix screw follow below specification.

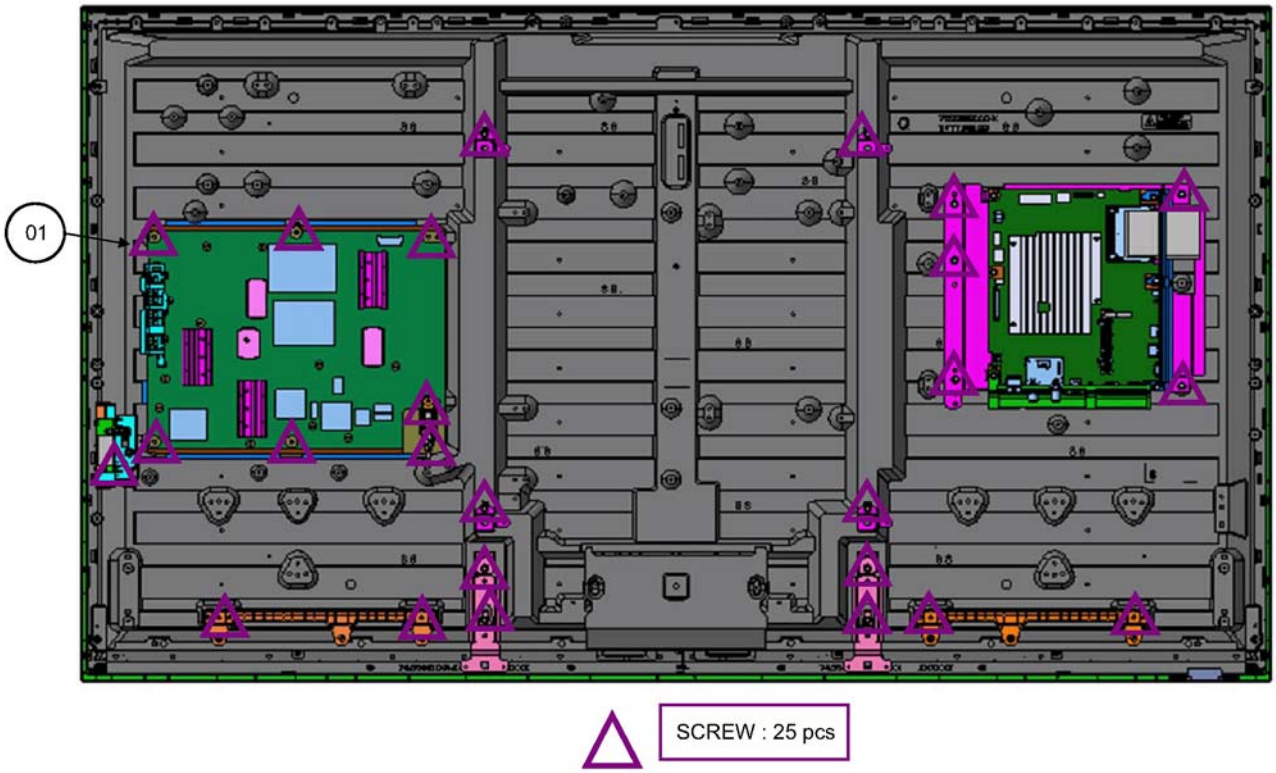

No	Description	Qty	UOM	Remarks
01	SCREW(P7/A5/WF1/SP4/VESA4/BMT4)	25	PC	6±1kgf.cm

7.7. Bottom Back Cover

1. Fix Bottom back cover & screw.

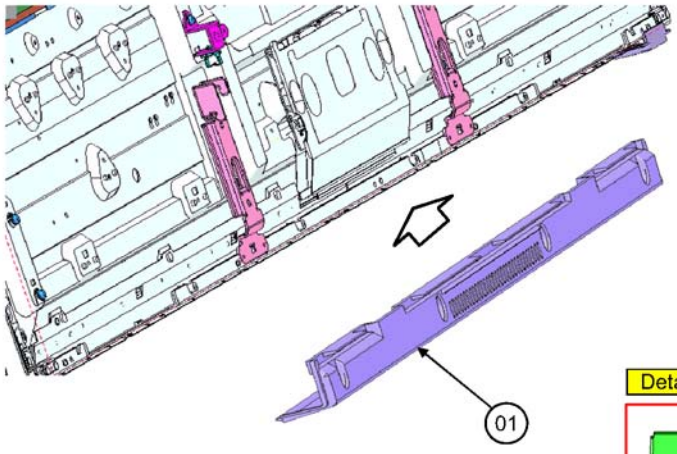

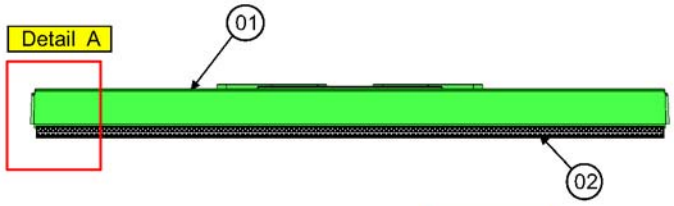

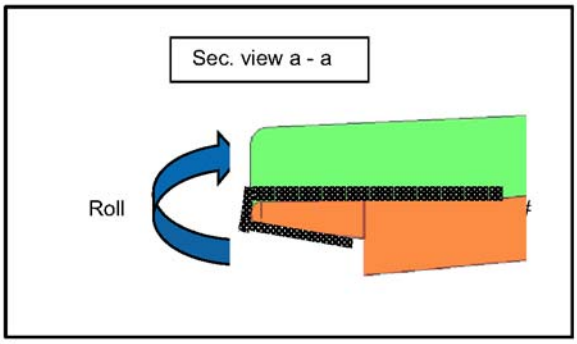

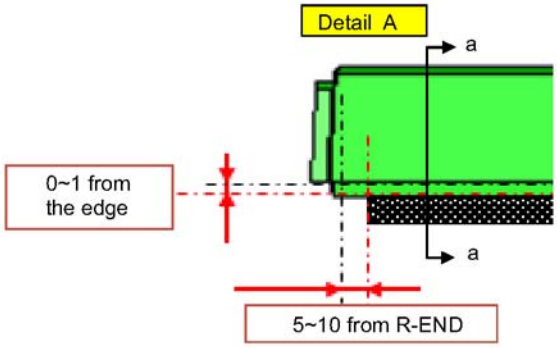

No	Description	Qty	UOM	Remarks
01	BOTTOM_BACK_COVER	1	PC	
02	FELT(T0.35*W8*L680)	1	PC	

7.8. Back Cover Installation

1. Install Back cover and fix with screw.

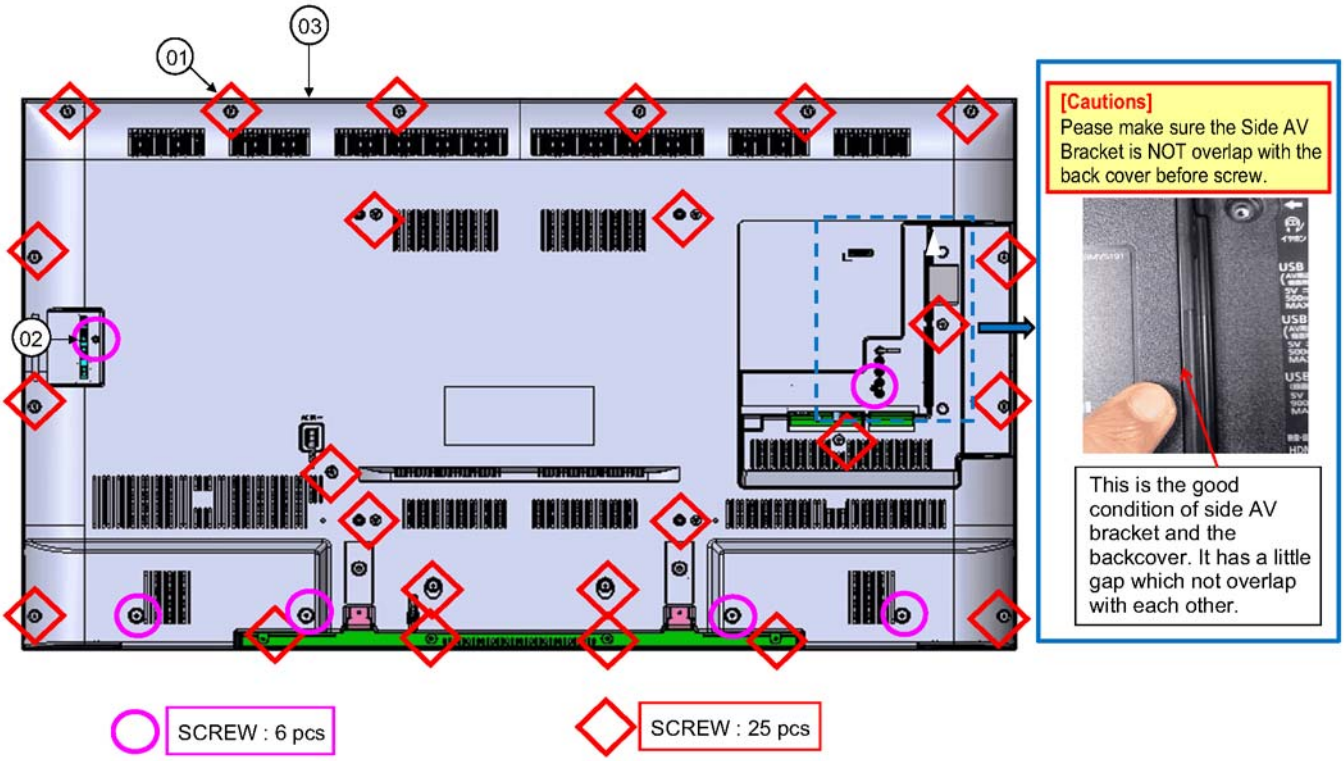

No	Description	Qty	UOM	Remarks
01	SCREW(BC25)	25	PC	6±1 Kgf.cm
02	SCREW(BC6)	6	PC	6±1 Kgf.cm
03	BACK_COVER	1	PC	

8 Measurements and Adjustments

8.1. Voltage chart of A-board

Set A-Board to a dummy set and check the satisfaction with the specified voltage as following table.

Checked Name	Test Point	Specification	In/Out	Target Board Suffix
PNL12V	TP4059	12V ± 1.2V	output	ALL
SUB5V	TP5241	5.17V ± 0.25V	output	ALL
USB1	TP8705	5.0V ± 0.25V	output	ALL
USB2	TP8711	5.0V ± 0.25V	output	ALL
USB-WiFi	TP8718	5.14V ± 0.20V	output	ALL
SUB3.3V	TP5201	3.33V ± 0.15V	output	ALL
HDMISW3.3V	TP4514	3.35V ± 0.17V	output	ALL
SUB_AI_3.3V	TP2206	3.3V ± 0.17V	output	ALL
STB_1.5V	TP8101	1.52V ± 0.07V	output	ALL
SUB1.0V	TP8100	1.02V ± 0.05V	output	ALL
AVDD1.0V	TP8102	1.06V ± 0.05V	output	ALL
WOL3.3V/PHY3.3V	TP8606	3.3V ± 0.17V	output	ALL
EU_TU_1.8V	TP5704	1.84V ± 0.1V	output	ALL

8.2. Voltage chart of P-board

Set P-Board to a dummy load and check the satisfaction with the specified voltage as following table.

Output	Test Point	Specification		
		Step 1	Step 2	
32V	TP7407/08/09	<1V	32 ± 1.6V	
16V	TP7410/11/12	<1V	15.7 ± 0.8V	
5VS	TP7405/20	5.24 ± 0.2V	5.24 ± 0.2V	
PFC	TP7201/02	<340V	390V ± 15V	*HOT

Step 1 Supply to P1 or JK7101 connector in the P-Board. Main power button is OFF.

Step 2 Supply DC 2.5V to TV_SUB_ON TP7419 (TNPA6263), displayed as SWITCH.

9 Block Diagram

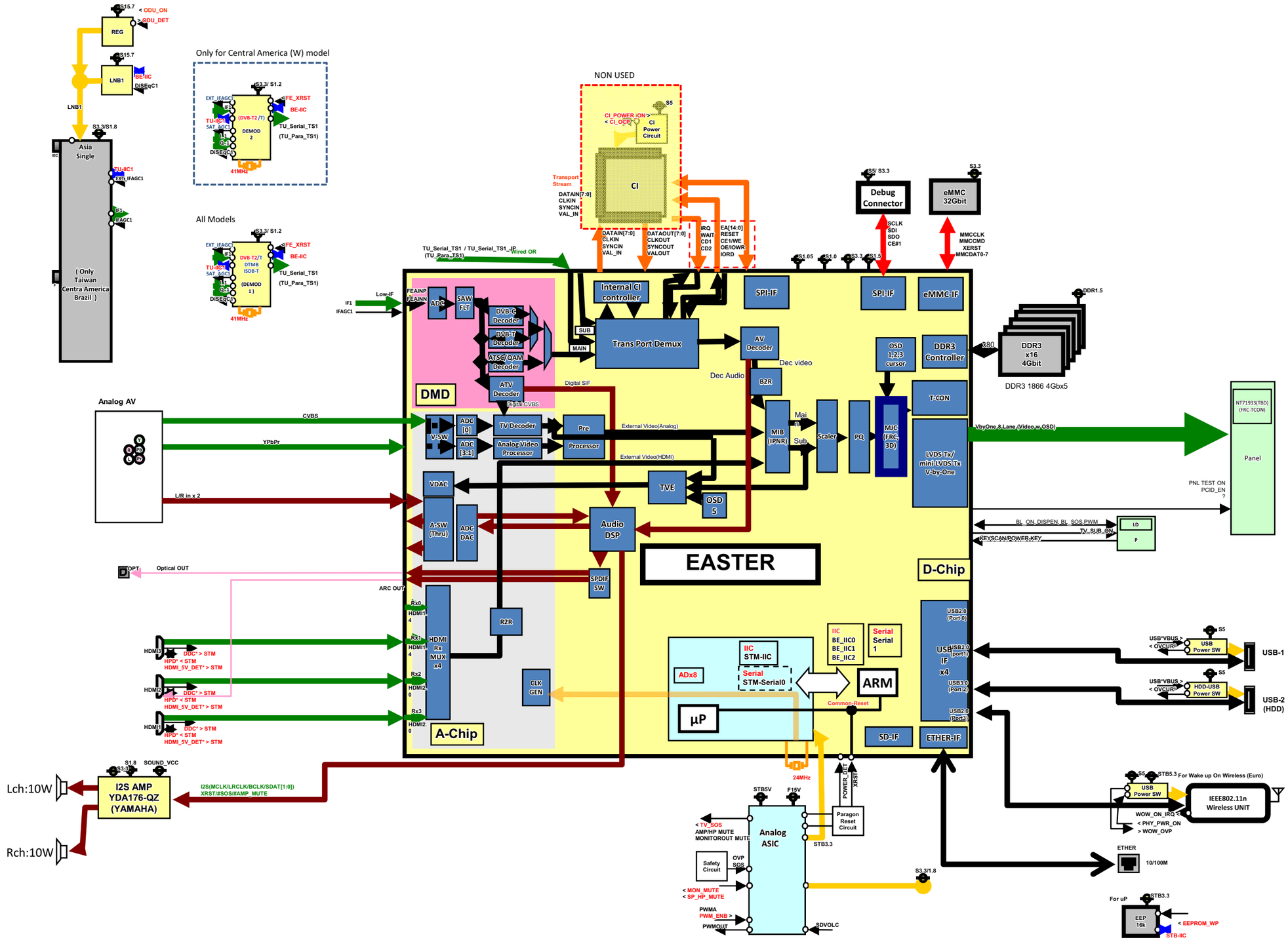

10 Wiring Connection Diagram

10.1. Wire Dressing -1

1. Do wire dressing follow below spec. (stick PET tape as shown).
2. Stick tapes and rub evently at lease twice.

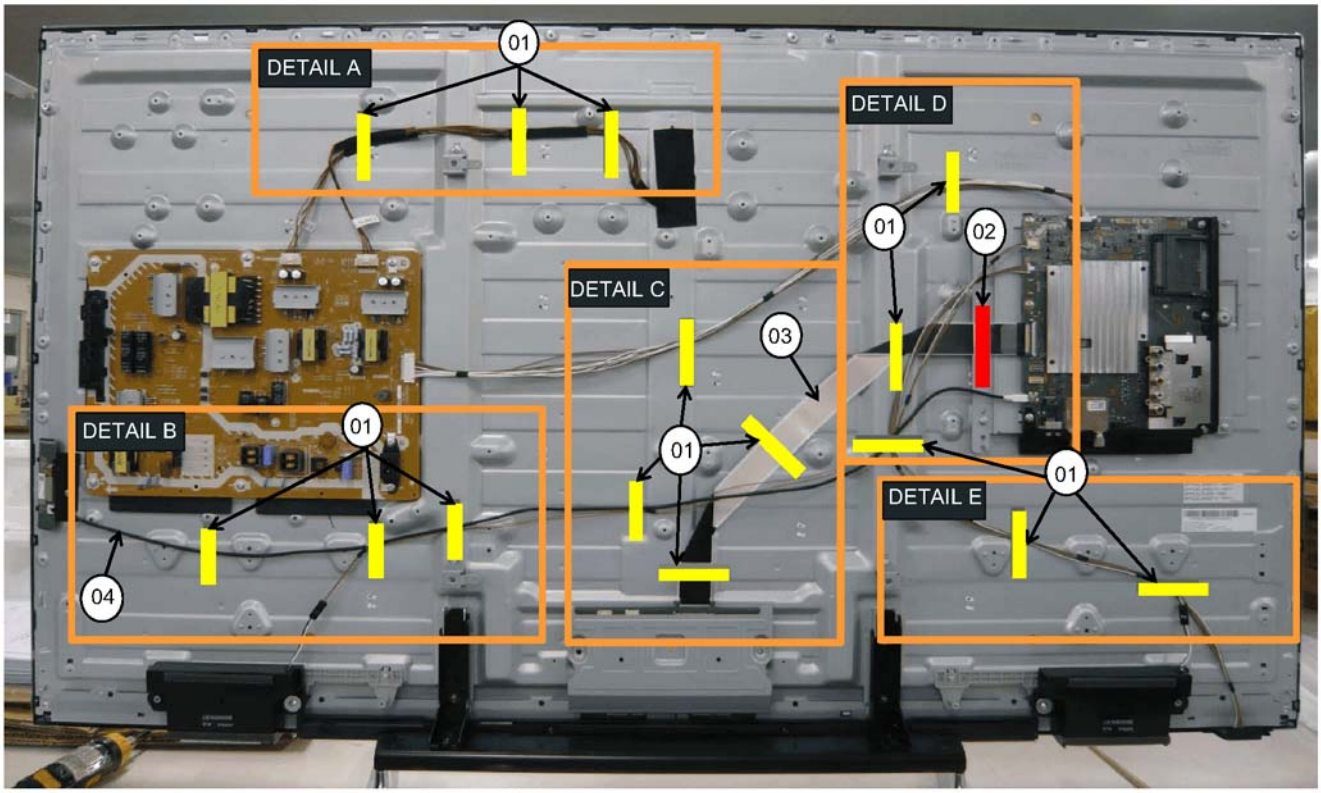

01 60mm x 15

02 80mm x 1

No	Description	Qty	UOM	Remarks
01	PET_TAPE	0.90	MT	60mm × 15
02	PET+AL(W10*L80)	0.08	MT	80mm × 1
03	LVDS_FFC(51PIN)	1	PC	
04	WIFI_USB_CABLE	1	PC	

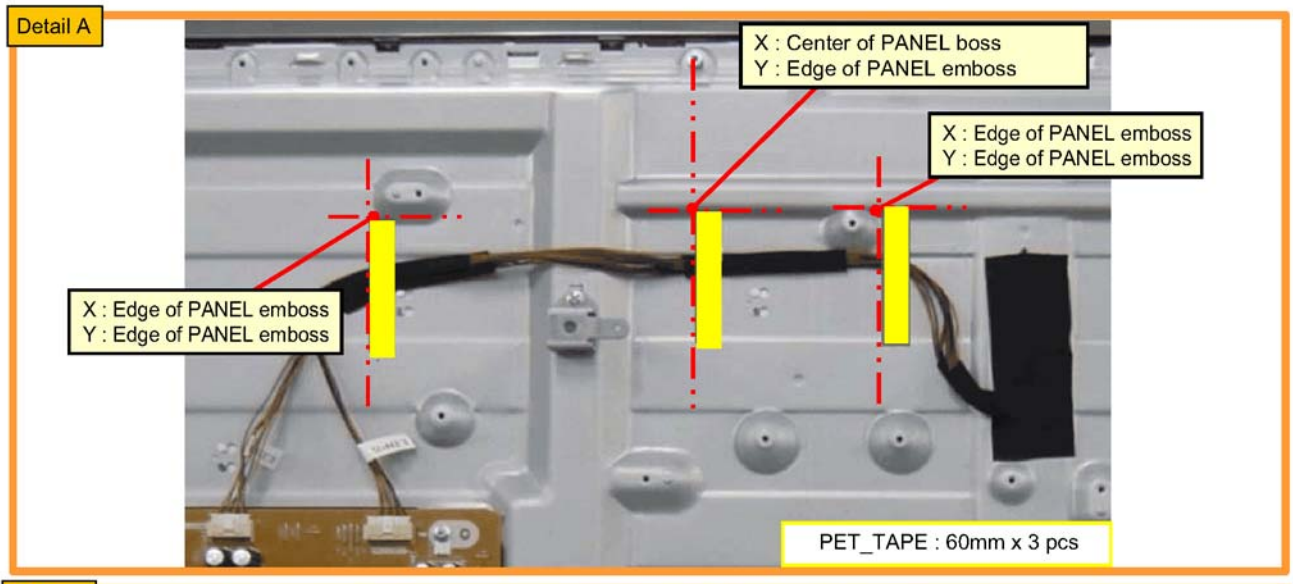
Detail A
X : Center of PANEL boss
Y : Edge of PANEL emboss
X : Edge of PANEL emboss
Y : Edge of PANEL emboss
X : Edge of PANEL emboss
Y : Edge of PANEL emboss
PET_TAPE : 60mm x 3 pcs

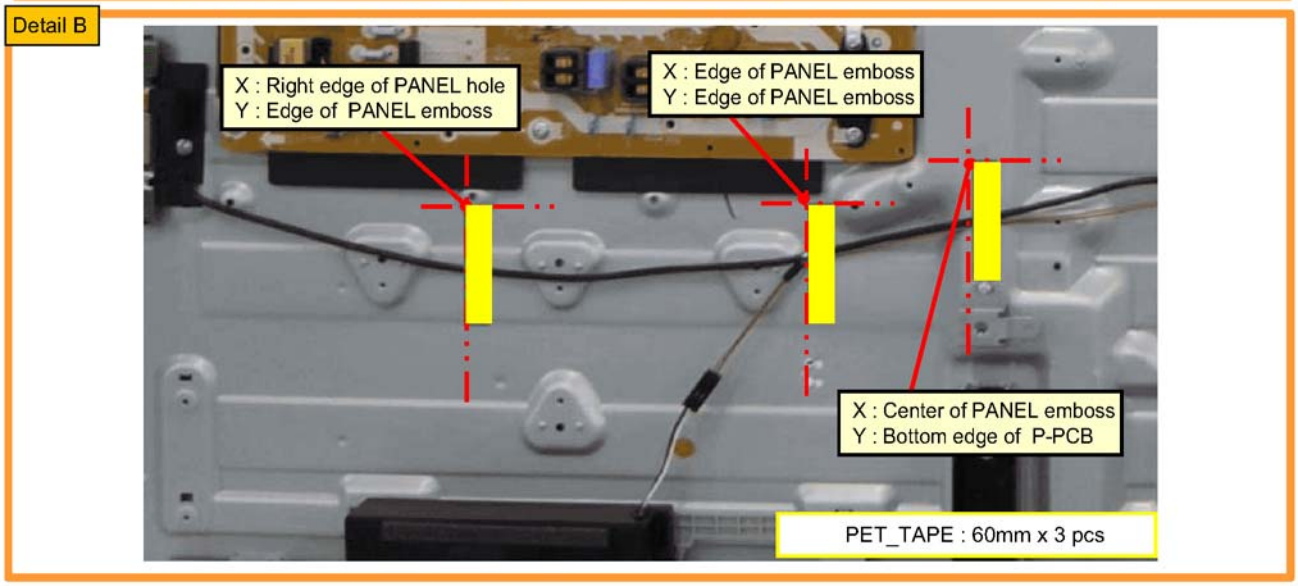
Detail B
X : Right edge of PANEL hole
Y : Edge of PANEL emboss
X : Edge of PANEL emboss
Y : Edge of PANEL emboss
X : Center of PANEL emboss
Y : Bottom edge of P-PCB
PET_TAPE : 60mm x 3 pcs

Detail C

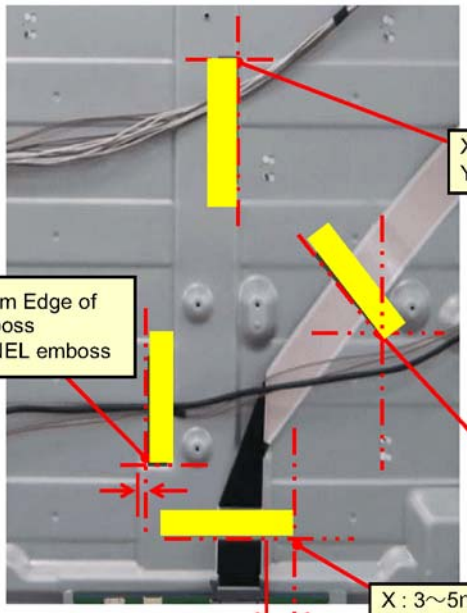

PET_TAPE : 60mm x 4 pcs

NOTES

Reference flexibles prepare intimately connected cables

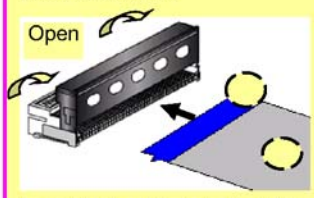

Insert the hooks on both sides of the flexible cable

NOTE: Ensure that the cable is properly inserted.

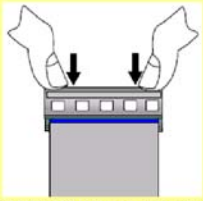

Close the press for the connector plug at both ends using 2 hands.

NOTE: If you want to disconnect the flexible, open the gate of the connector and gently pull at the same time to remove.

Detail D

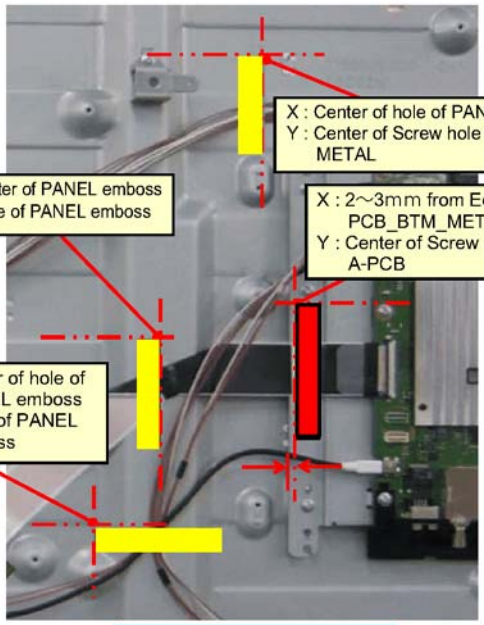

PET+AL : 80mm x 1 pc

PET_TAPE : 60mm x 3 pcs

Detail E

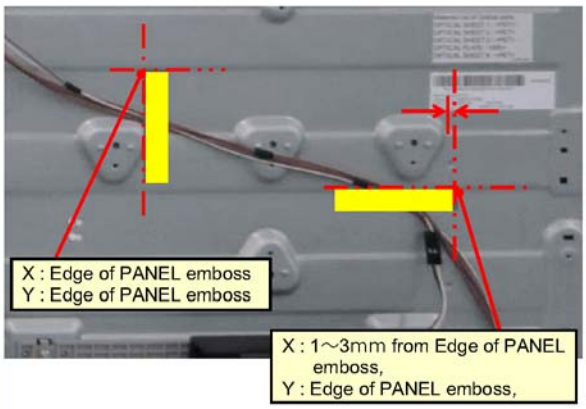

PET_TAPE : 60mm x 2 pcs

10.2. Wire Dressing -2

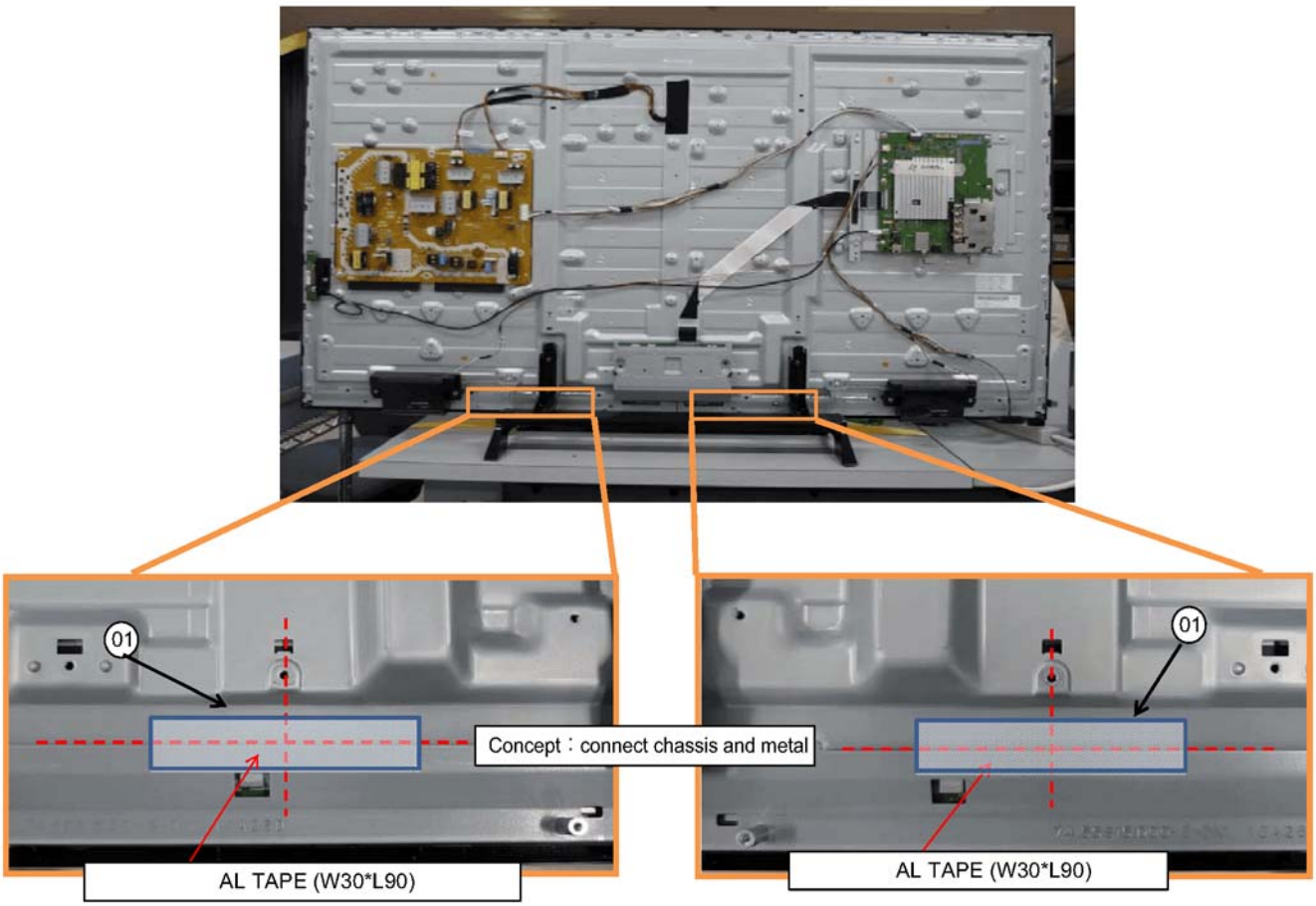

No	Description	Qty	UOM	Remarks
01	AL_TAPE	2	PC	

Model No. : TH-55DX650R P-Board (1/3)

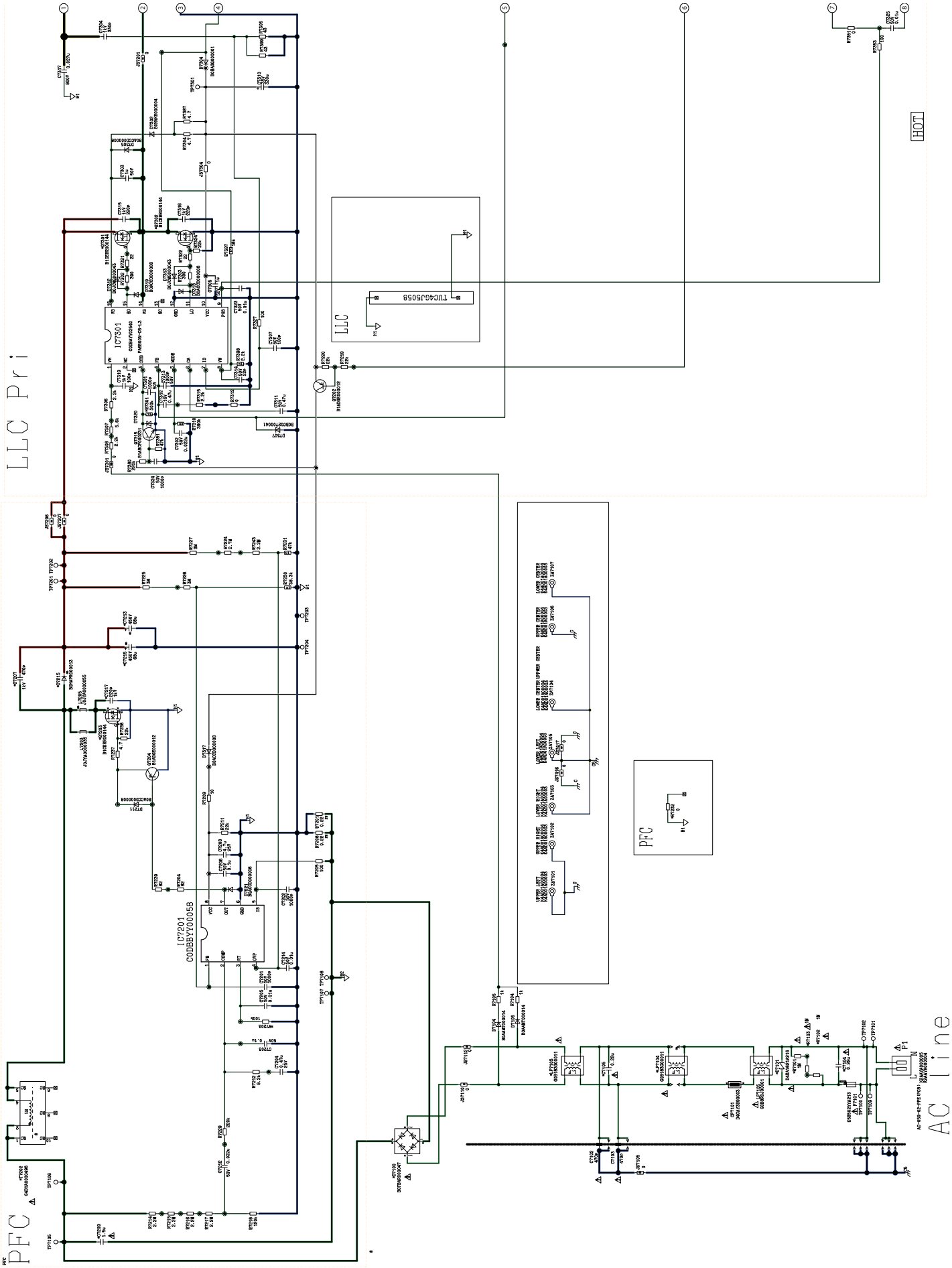

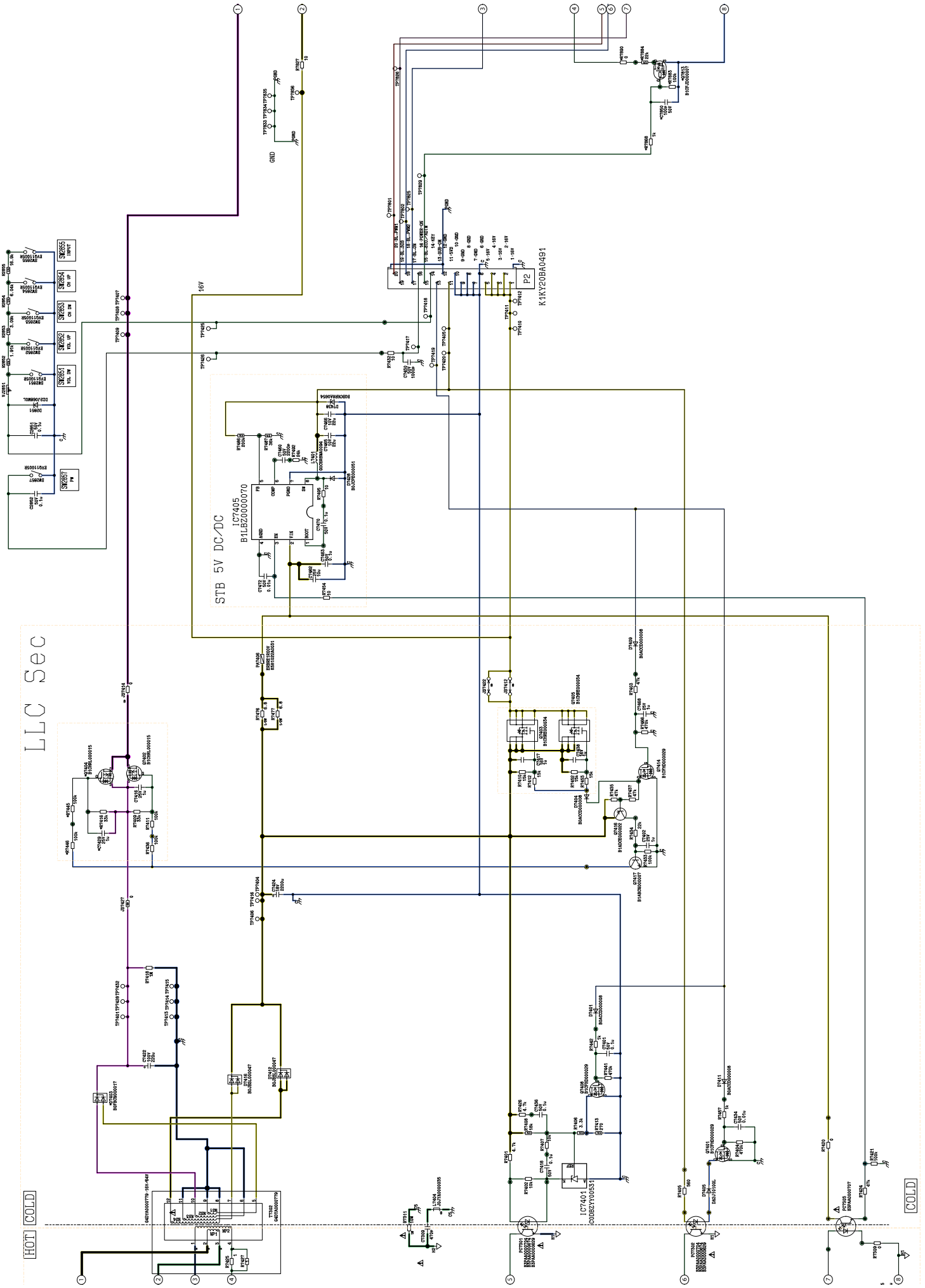
LLC Sec
STB 5V DC/DC
IC7405
B1LB20000070
IC7401
C0DB2YY00531
K1KY20BA0491
P2
16V
GND
HOT
COLD
COLD

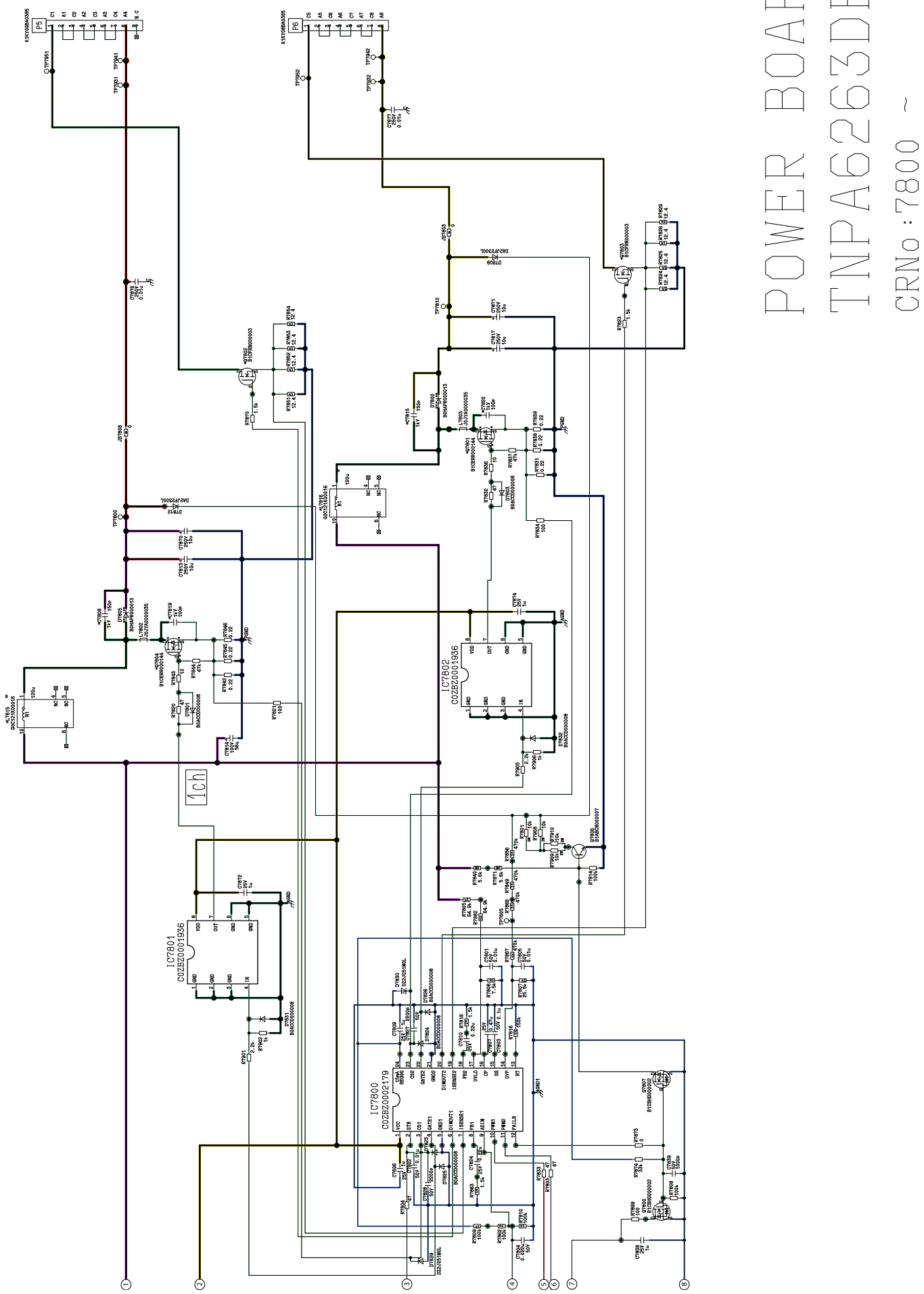
POWER BOARD
TNPA6263DB
CRNo:7800 ~
IC7800
C0ZBZ0002179
IC7801
C0ZBZ0001936
IC7802
C0ZBZ0001936
1ch

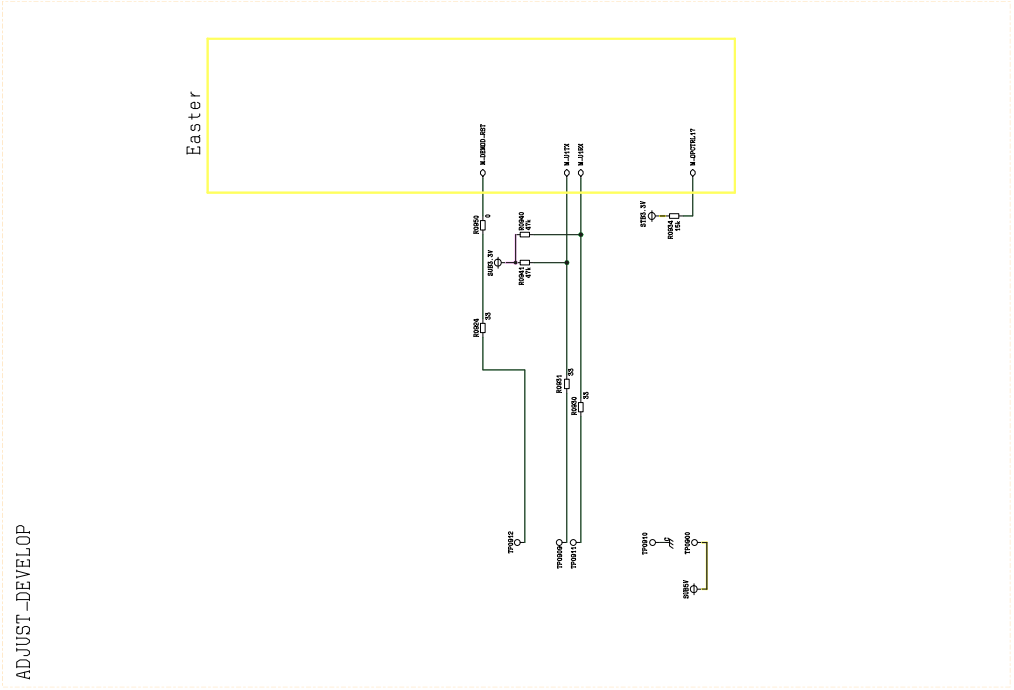

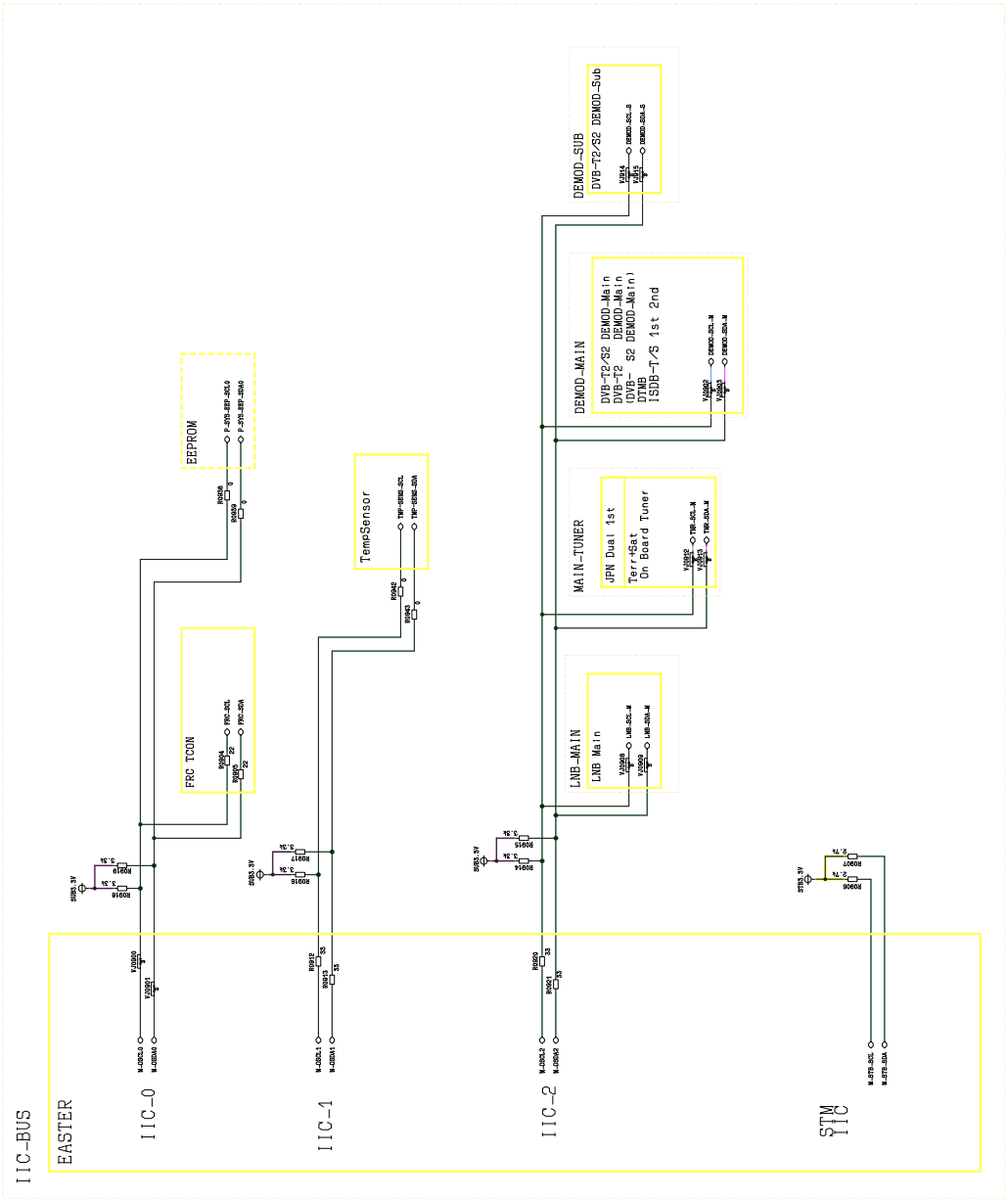

SHEET 002
IIC
CRNo:0900 - 0999

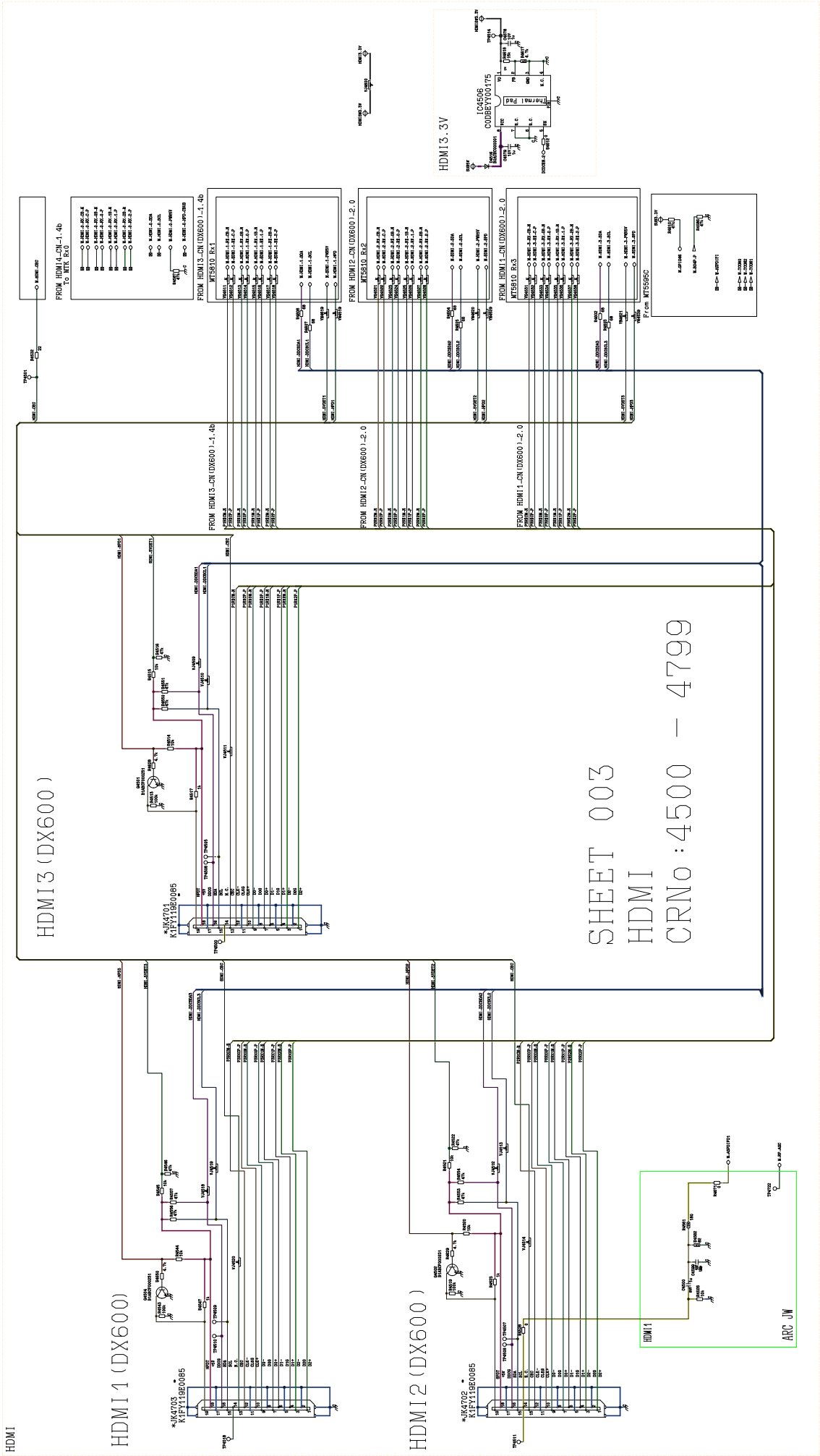
HDMI3(DX600)
SHEET 003
HDMI
CRNo:4500 - 4799
HDMI1(DX600)
HDMI2(DX600)
HDMI3.3V
FROM HDMI4-CN-1.4b TO MTK RX0
FROM HDMI3-CN(DX600)-1.4b
FROM HDMI2-CN(DX600)-2.0
FROM HDMI1-CN(DX600)-2.0
From MT5595C
ARC ON
HDMI

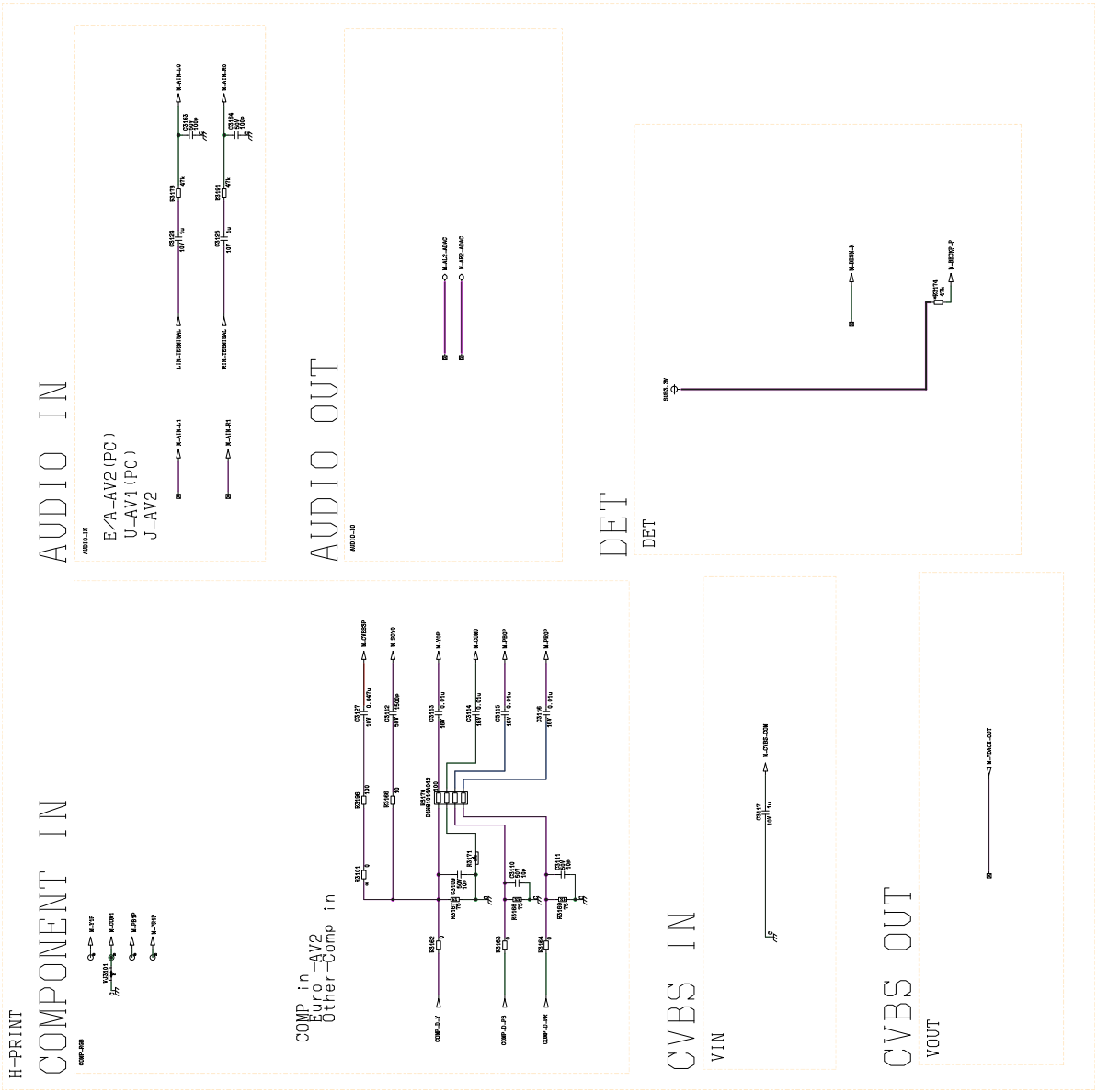
H-PRINT
COMPONENT IN
AUDIO IN
E/A-AV2(PC)
U-AV1(PC)
J-AV2
AUDIO OUT
DET
DET
COMP in
Euro-AV2
Other-Comp in
CVBS IN
VIN
CVBS OUT
VOUT

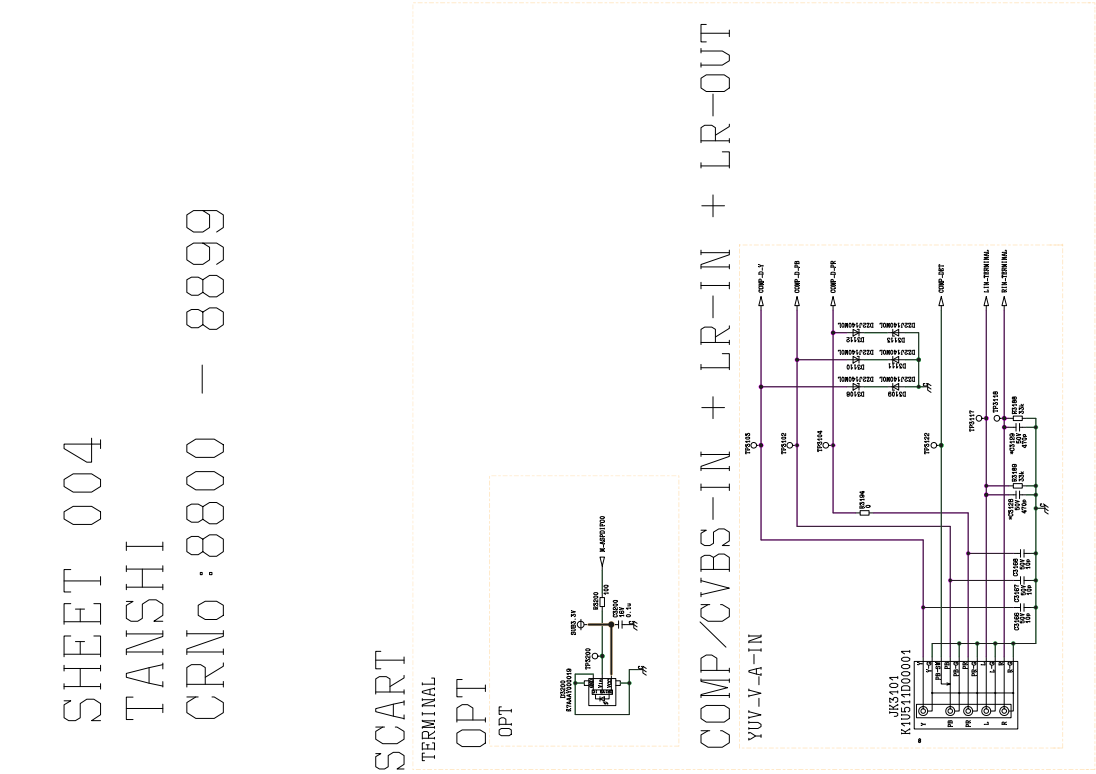
SHEET 004
TANSHI
CRNo:8800 - 8899
SCART
TERMINAL
OPT
OPT
COMP/CVBS-IN + LR-IN + LR-OUT
YUV-V-A-IN
JK3101
K1U511D00001

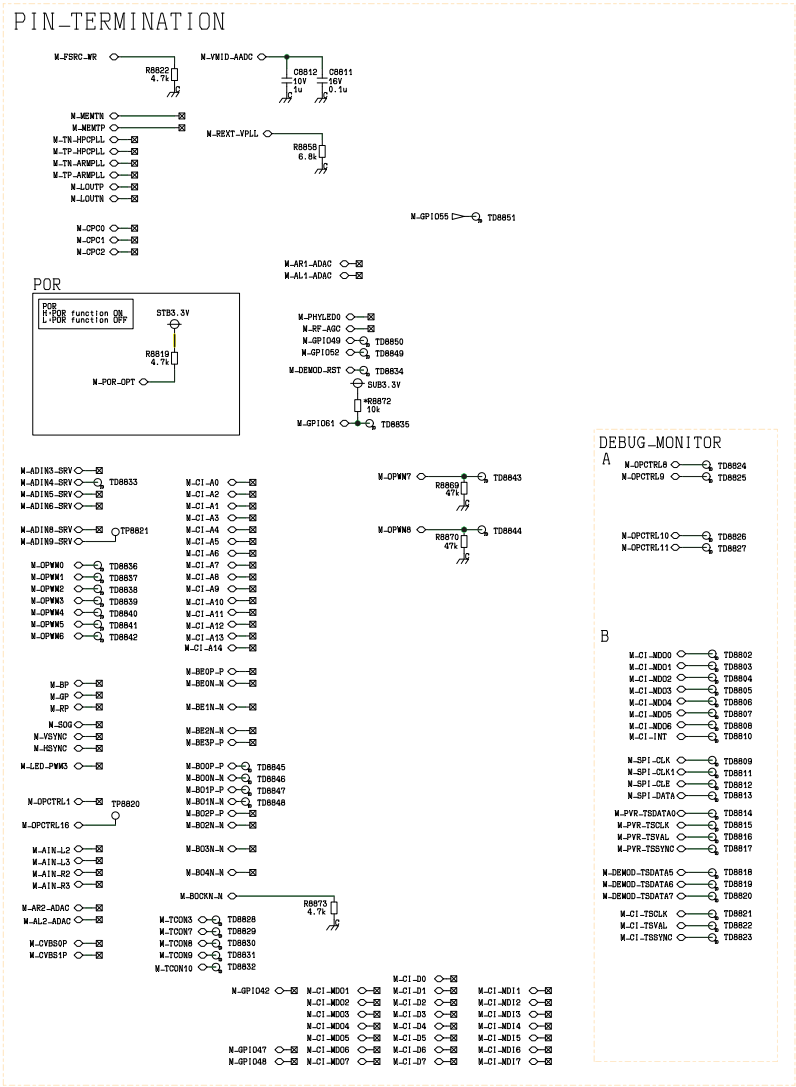

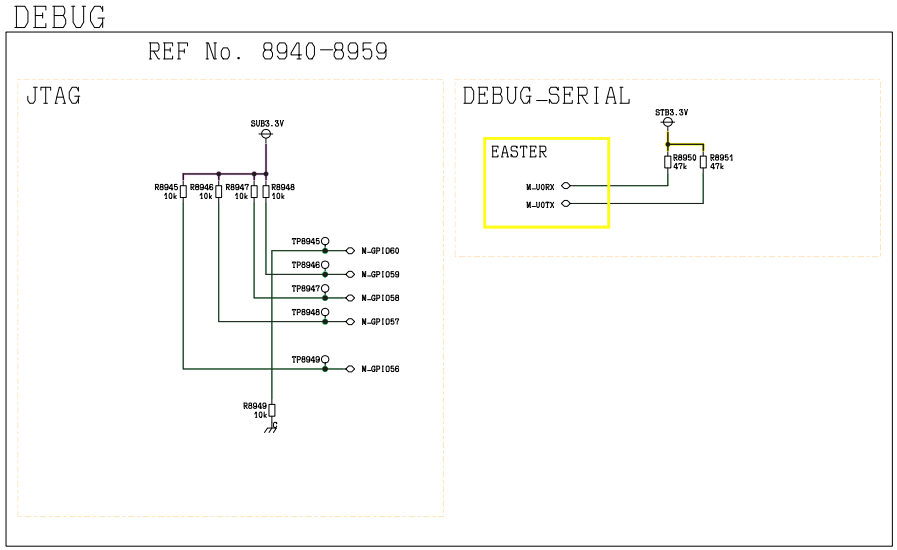

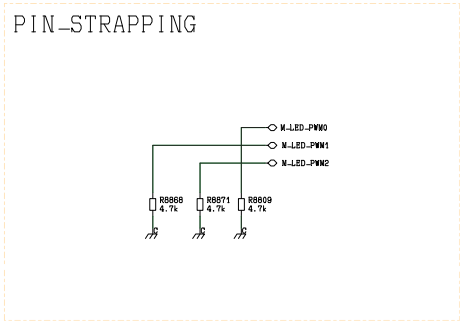

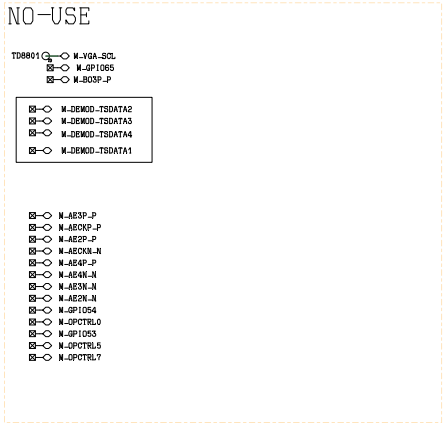

SHEET 005

EASTER_OTHER

CRNo:8800 — 8899

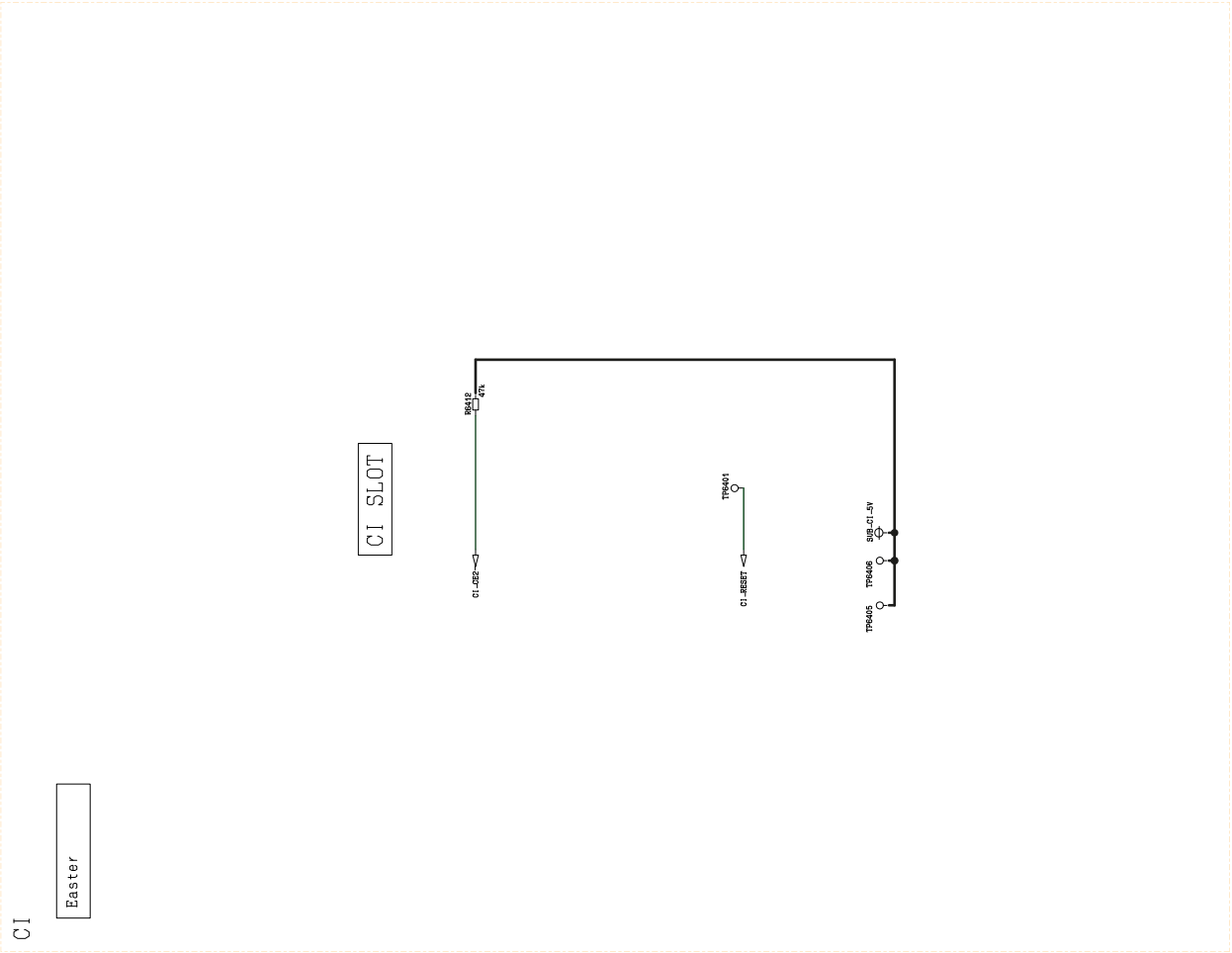

SHEET 006
CI/B-CAS
CRNo:8400 - 8599

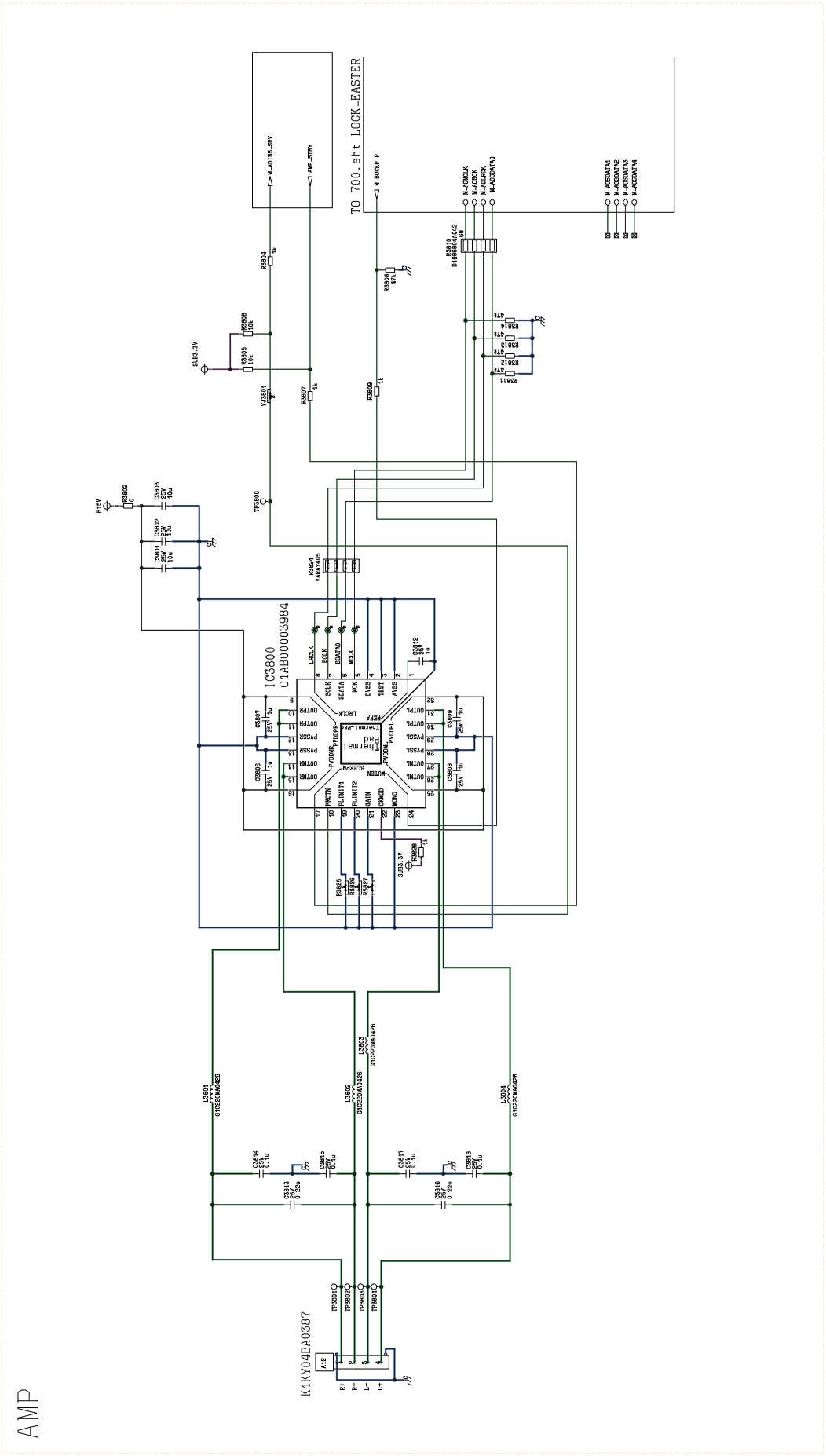

SHEET 007
AUDIO AMP
CRNo:3800 - 3999

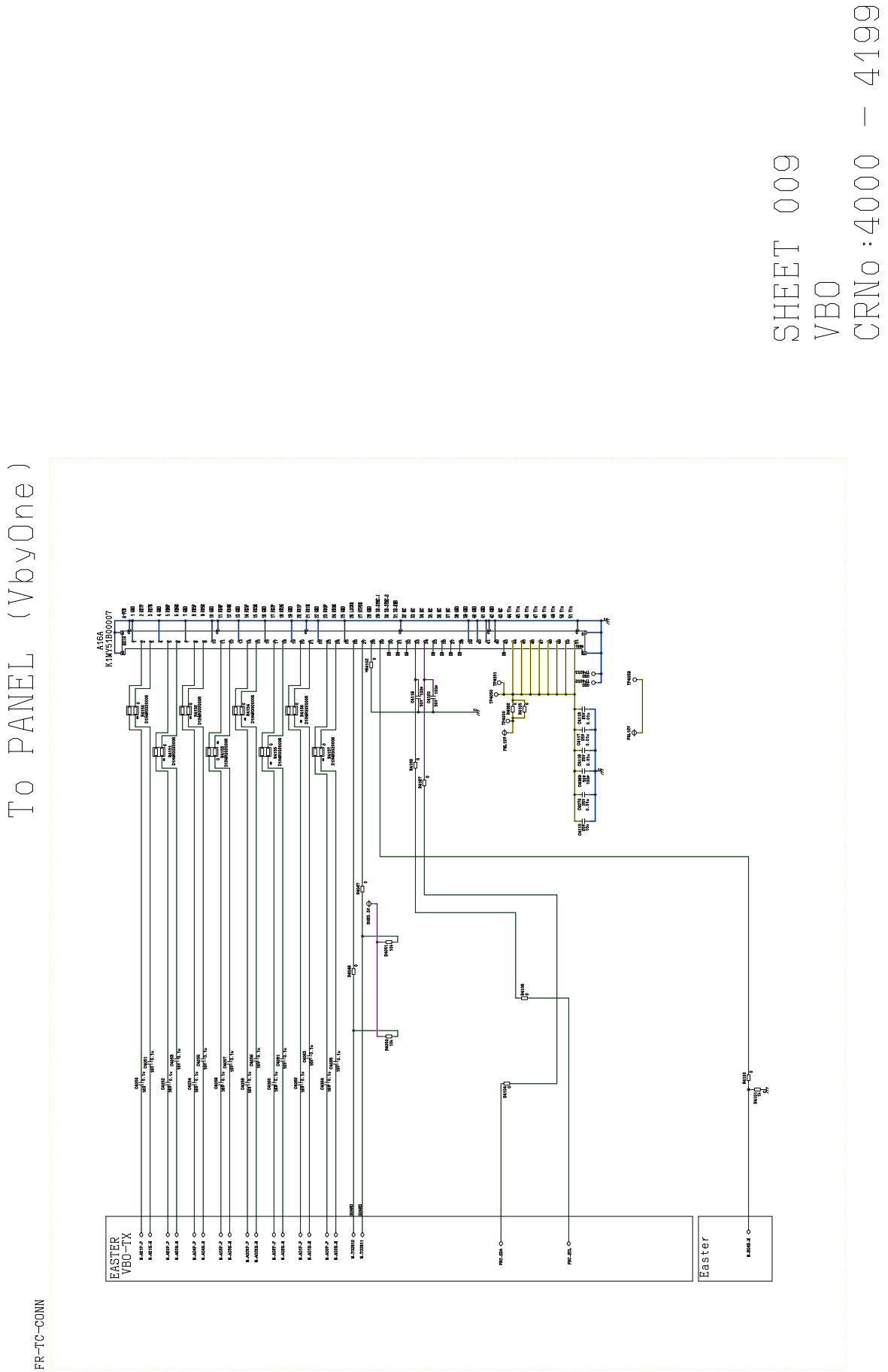
SHEET 009
VBO
CRNo:4000 - 4199
To PANEL (VbyOne)
A16A
K1MY51B00007
EASTER
VBO-TX
Easter
FR-TC-CONN

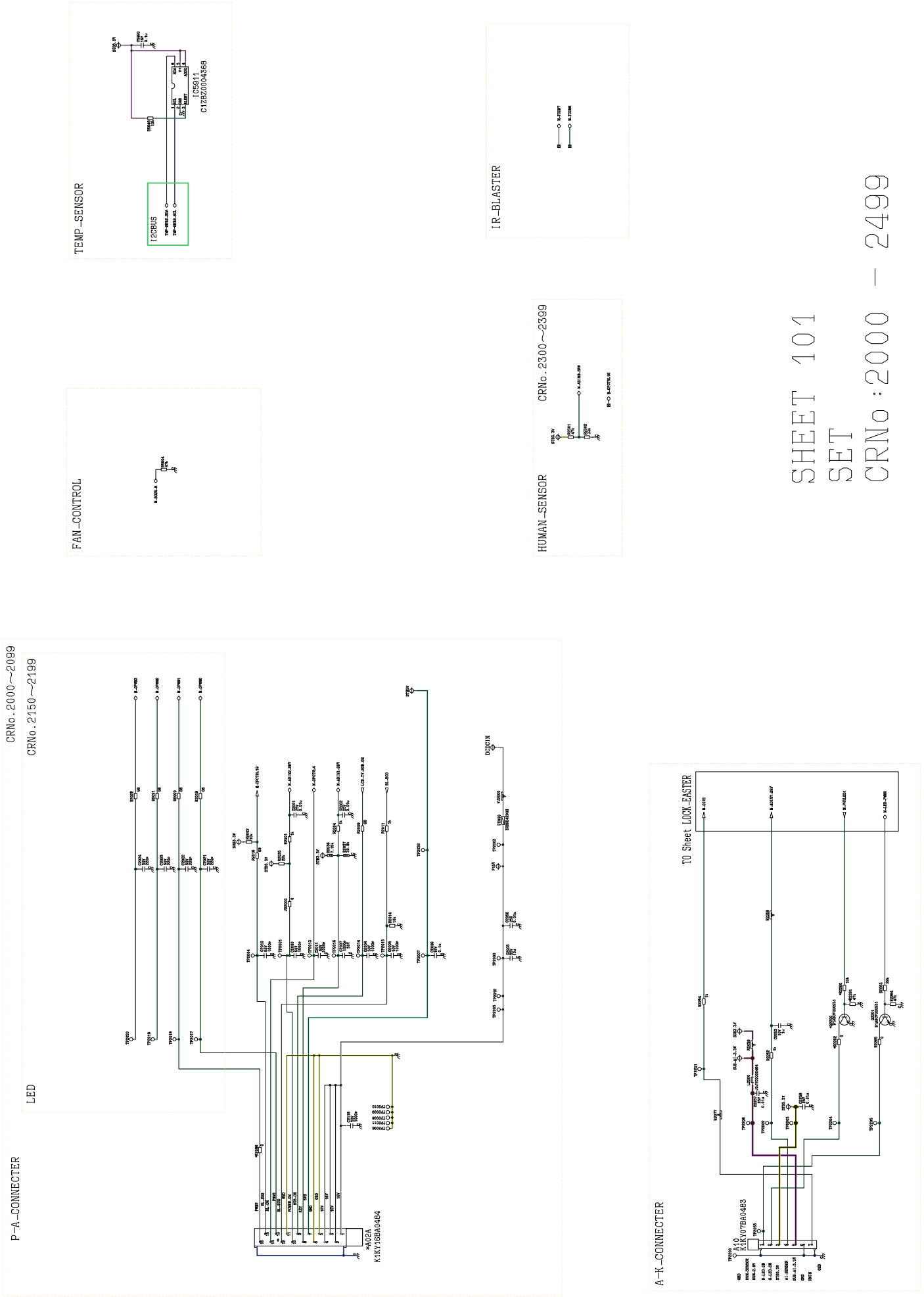
TEMP-SENSOR
I2CBUS
IC5911
C12B20004368
IR-BLASTER
FAN-CONTROL
HUMAN-SENSOR
CRNo.2300~2399
SHEET 101
SET
CRNo:2000 - 2499
CRNo.2000~2099
CRNo.2150~2199
LED
P-A-CONNECTER
#A02A
K1KY16BA0484
TO Sheet LOCK-EASTER
A-K-CONNECTER
#A10
K1KV07BA0483

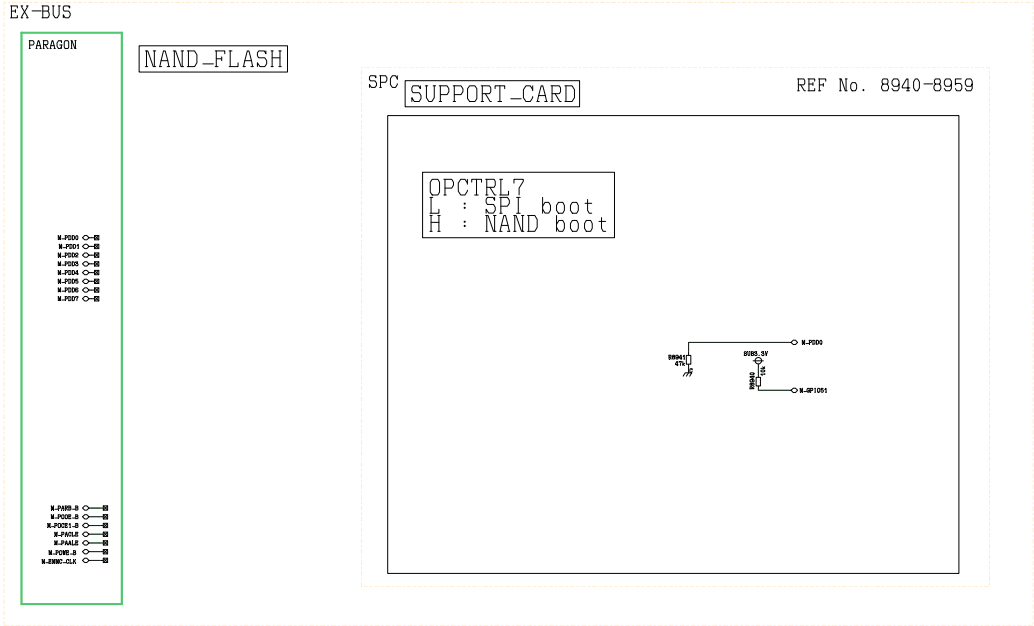

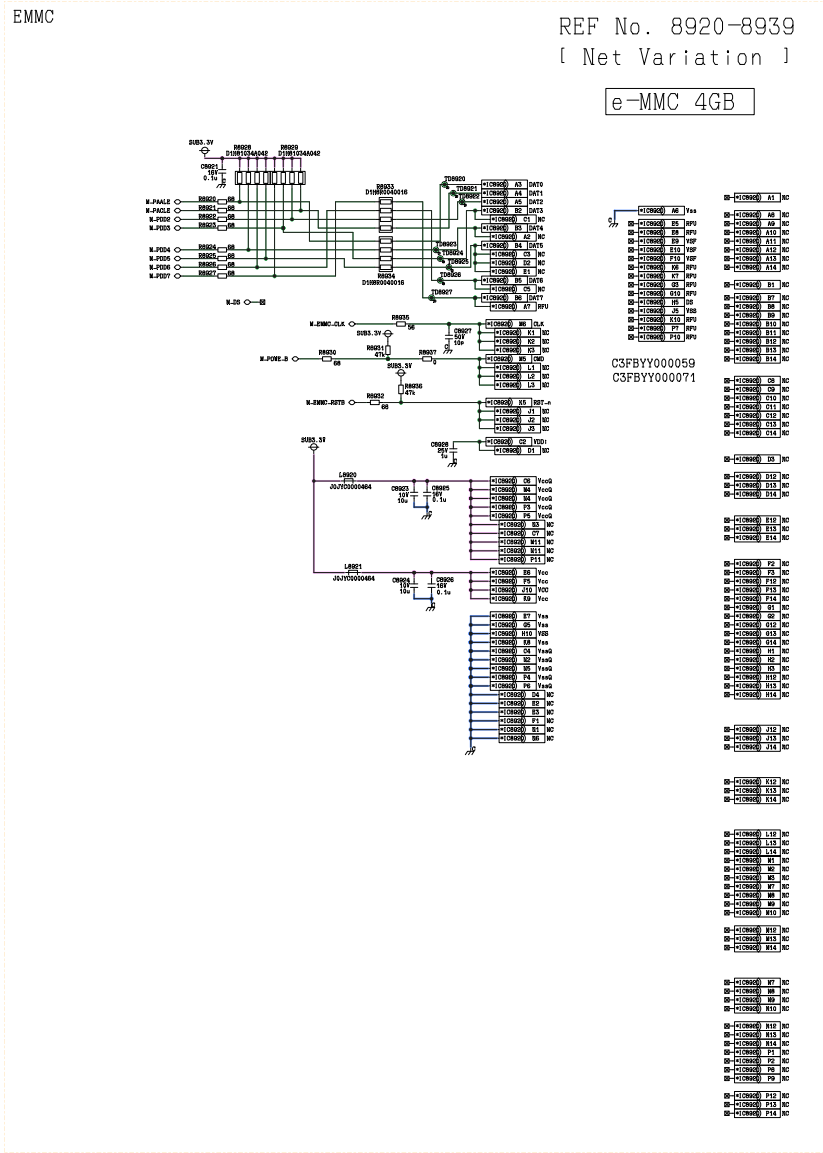

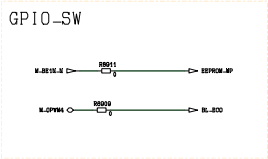

SHEET 300
COMMON EMMC/SPC/EEPROM/JTAG
CRNo:8900-8959

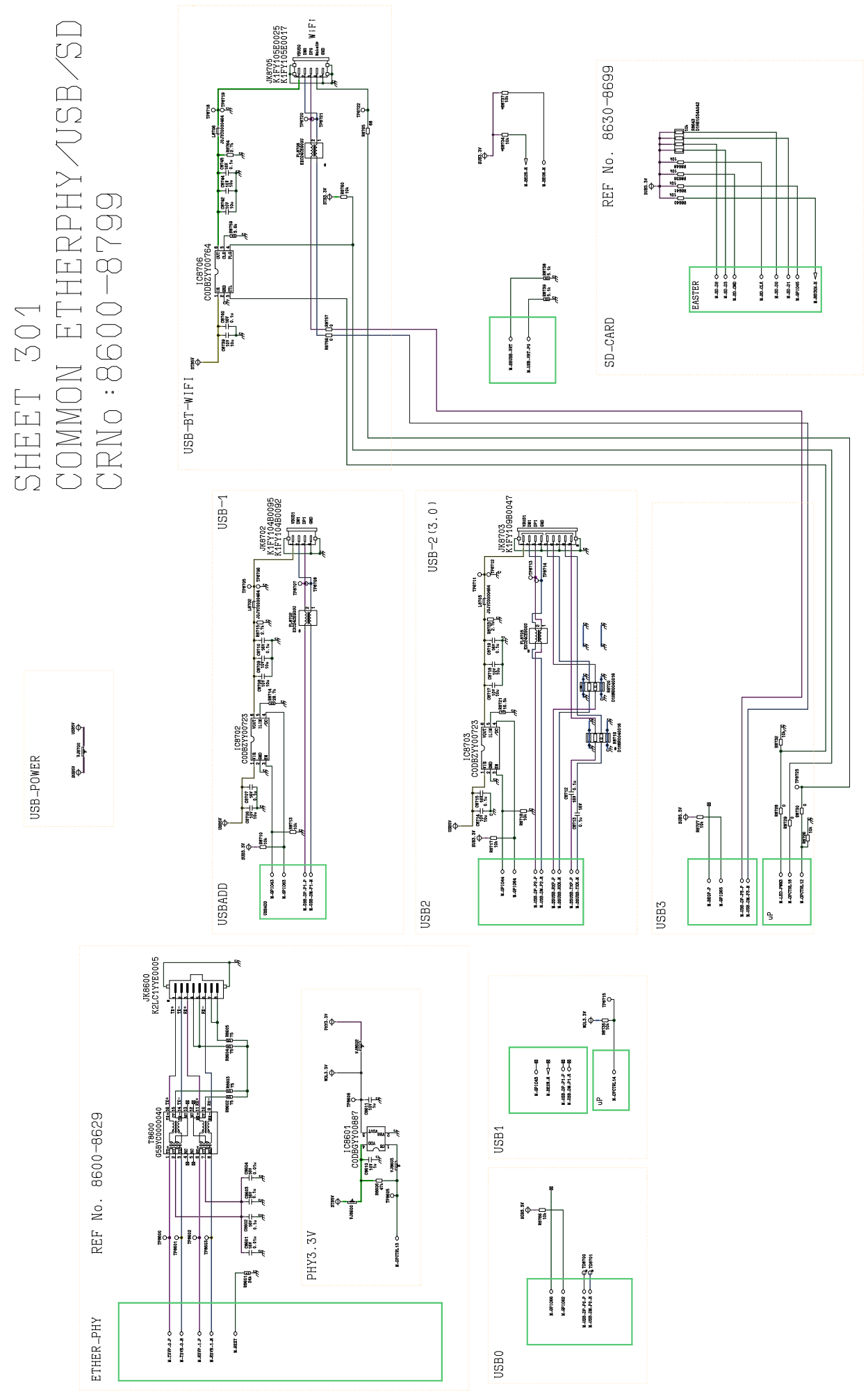
SHEET 301
COMMON ETHERPHY/USB/SD
CRNo:8600-8799
USB-BT-WIFI
JK8705
K1FY105E0025
K1FY105E0017
WIFI
IC8706
C0DBZY000764
REF No. 8630-8699
SD-CARD
EASTER
USB-POWER
USB-1
JK8702
K1FY104B0095
K1FY104B0092
IC8702
C0DBZY000723
USBADD
USB-2(3.0)
JK8703
K1FY109B0047
IC8703
C0DBZY000723
USB2
USB3
uP
ETHER-PHY
REF No. 8600-8629
JK8600
K2LCYYE0005
T8600
G5BYC0000040
PHY3.3V
IC8601
C0DBGY000887
USB1
USB0

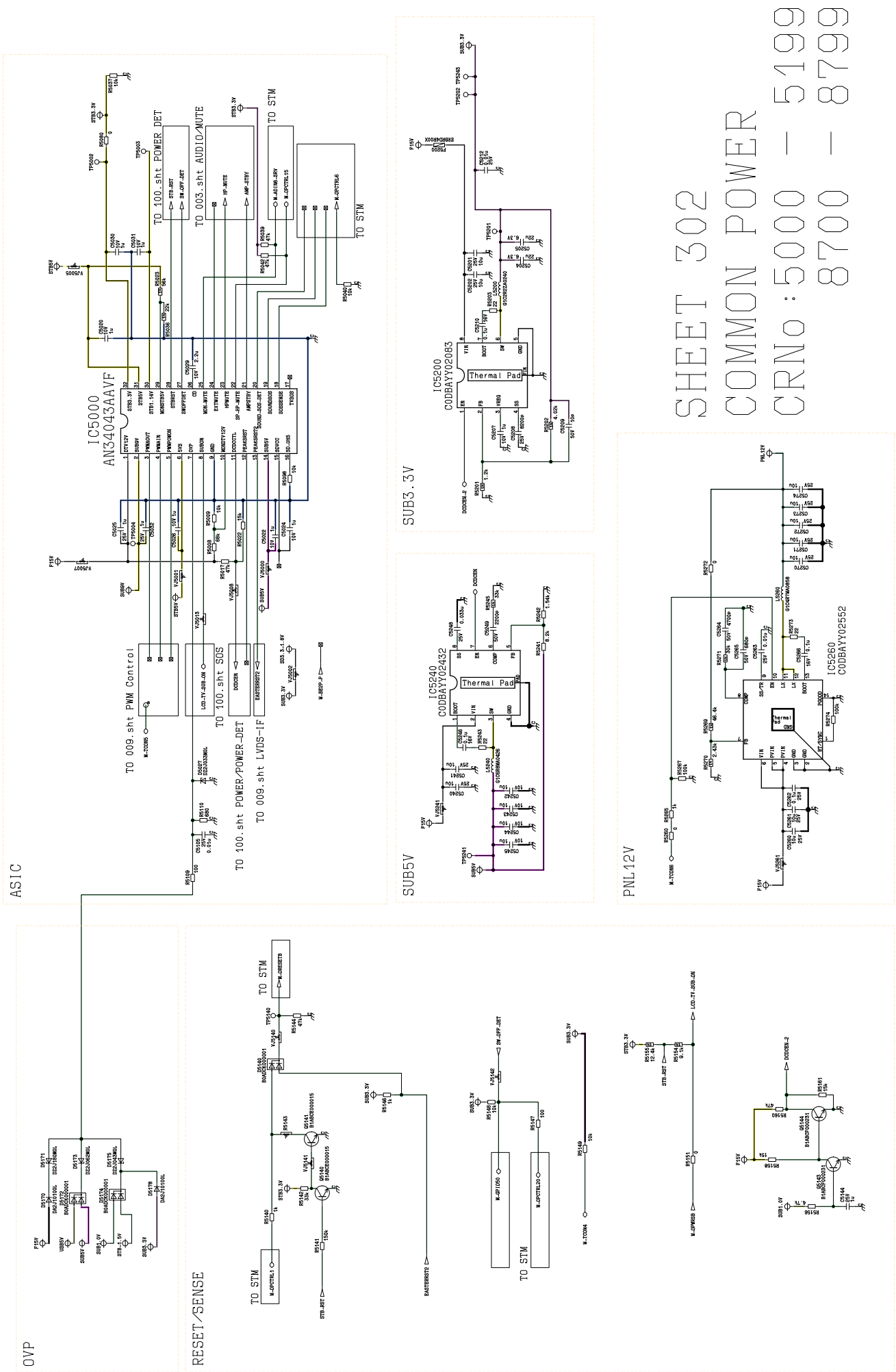
SHEET 302
COMMON POWER
CRNo: 5000 - 5199
8700 - 8799
ASIC
IC5000
AN34043AAVF
TO 009.sht PWM Control
TO 100.sht SOS
TO 100.sht POWER/POWER-DET
TO 009.sht LVDS-IF
TO 100.sht POWER DET
TO 003.sht AUDIO/MUTE
TO STM
SUB3.3V
IC5200
CODBAYY02083
Thermal Pad
SUB5V
IC5240
CODBAYY02432
PNL12V
IC5260
CODBAYY02552
OVP
RESET/SENSE

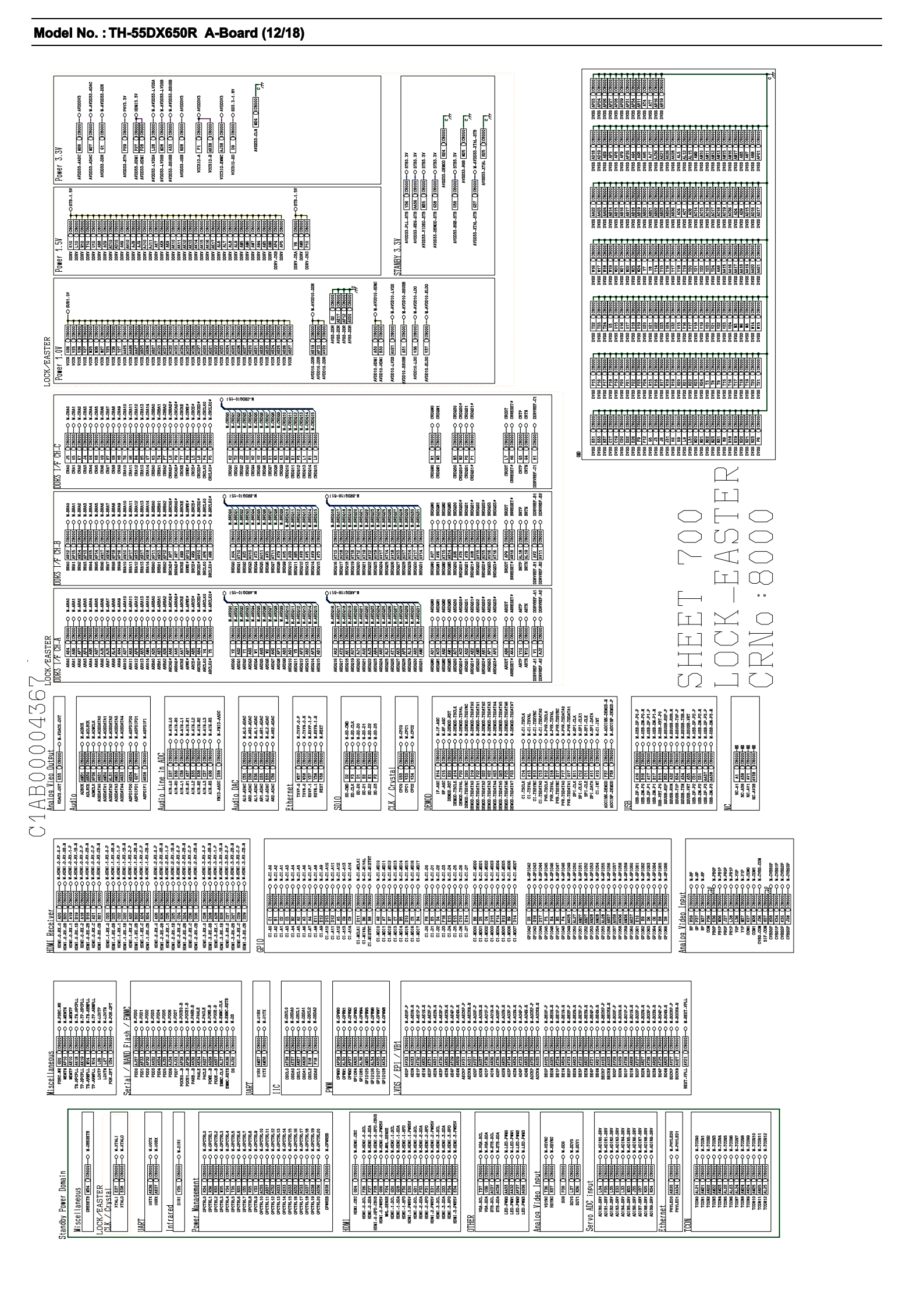
C1AB0004367
Standby Power Domain
Miscellaneous
LOCK-EASTER
CLK / Crystal
UART
Infrared
Power Management
HDMI
Serial / NAND Flash / EMMC
GPIO
UART
I2C
PWM
LVDS / FPI / VB1
OTHER
Analog Video Input
Servo ADC Input
Ethernet
TCON
HDMI Receiver
Miscellaneous
Audio
Analog Video Output
Audio Line in ADC
Audio DAC
Ethernet
SDIO
CLK / Crystal
DEMOD
USB
NC
DDR3 1/4 CH-A
DDR3 1/4 CH-B
DDR3 1/4 CH-C
Power 1.0V
Power 1.5V
Power 3.3V
STANDBY 3.3V
SHEET 700
LOCK-EASTER
CRNo:8000

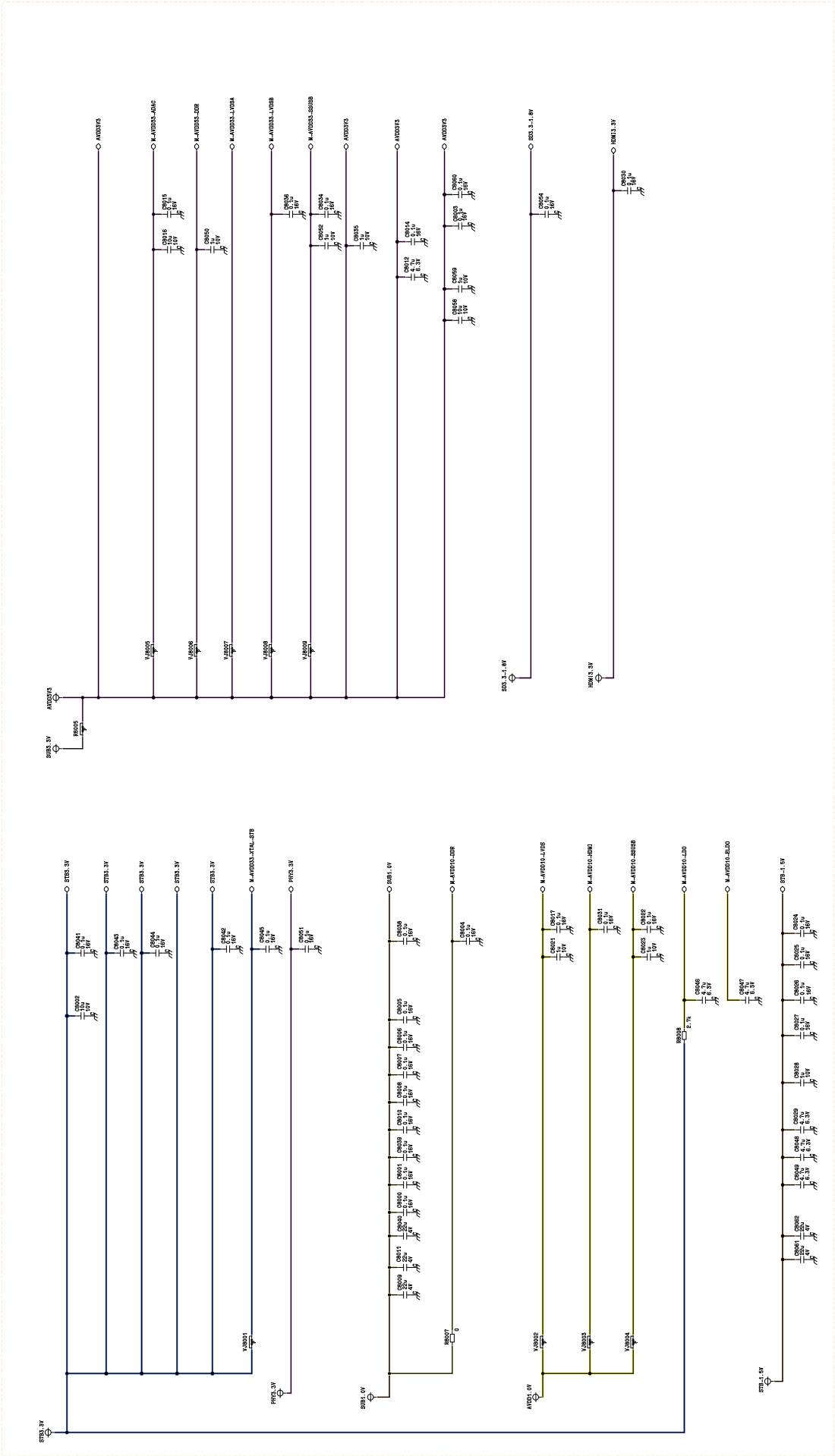
SHEET 701
LOCK-EASTER-POWER
CRNo:800-8099
LOCK/EASTER

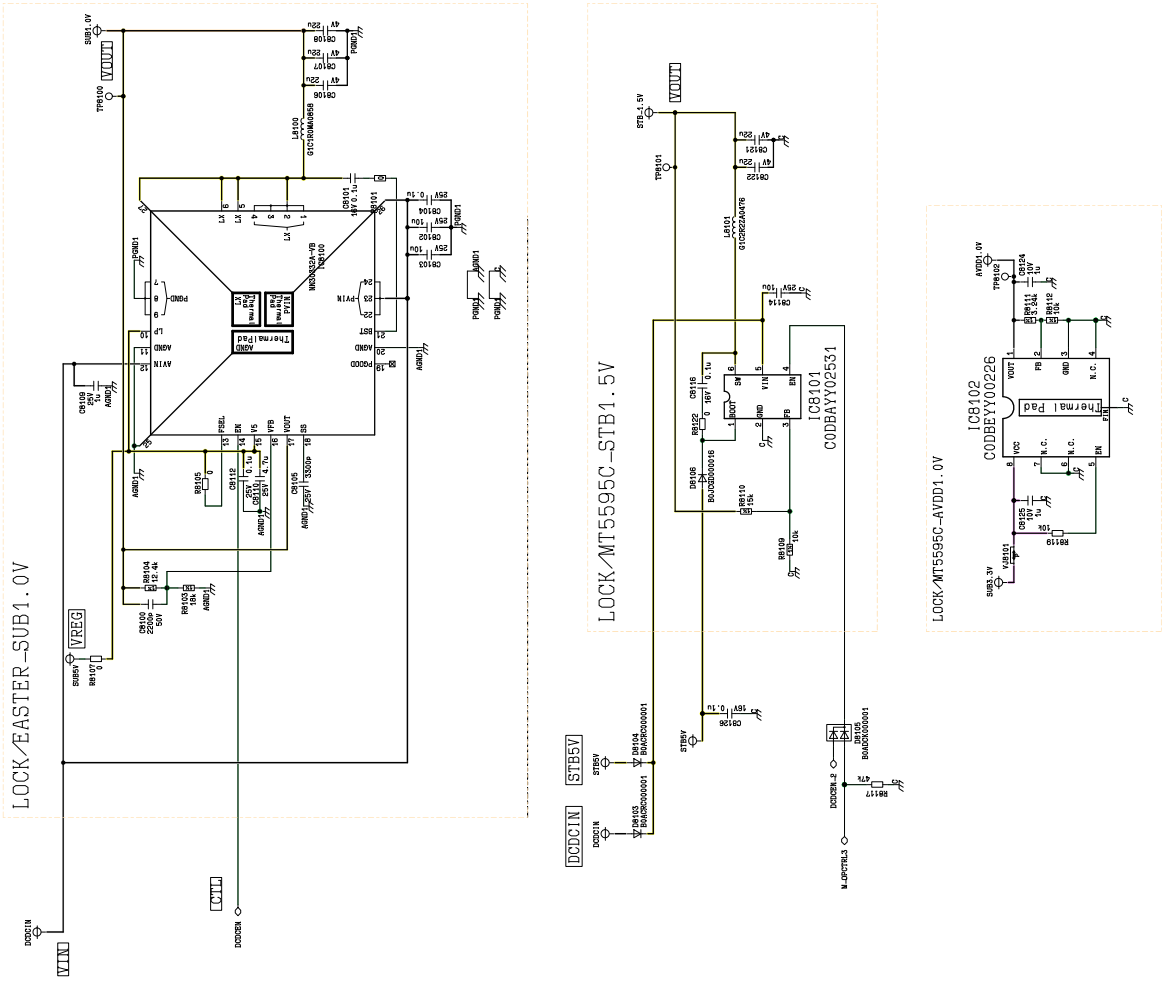
SHEET 702
LOCK-EASTER-DCDC
CRNo.8100 - 8199
LOCK/EASTER-SUB1.0V
LOCK/MT5595C-STB1.5V
LOCK/MT5595C-AVDD1.0V
IC8101
C0DBAYY02531
IC8102
C0DBEYY00226
STB5V
DCDCIN
VREG
VOUT
VIN
LCTL
DCDCEN

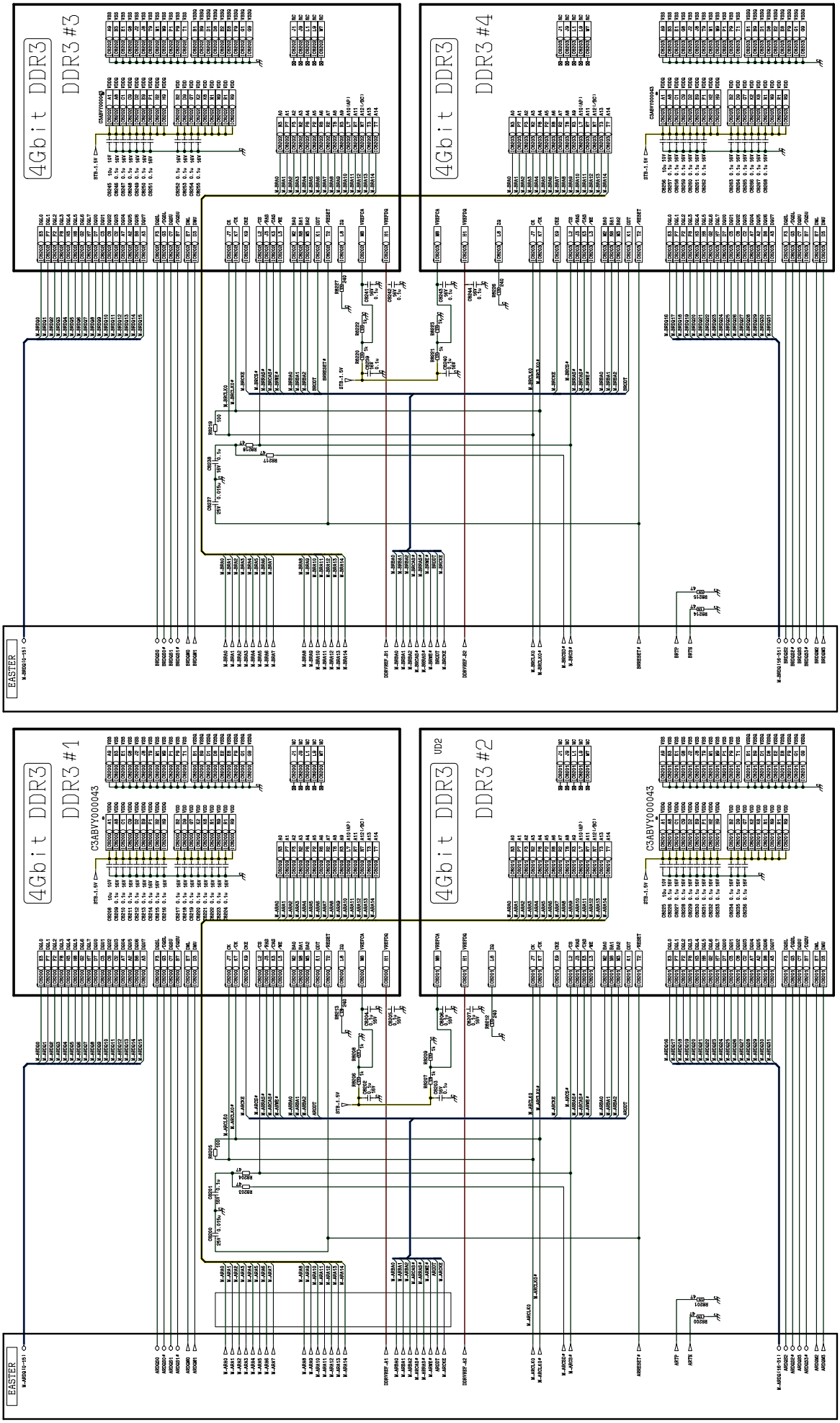
4Gbit DDR3
DDR3#3
4Gbit DDR3
DDR3#4
4Gbit DDR3
DDR3#1
C5ABYY000043
4Gbit DDR3
UD2
DDR3#2
C5ABYY000043
EASTER
EASTER

LOCK/EASTER

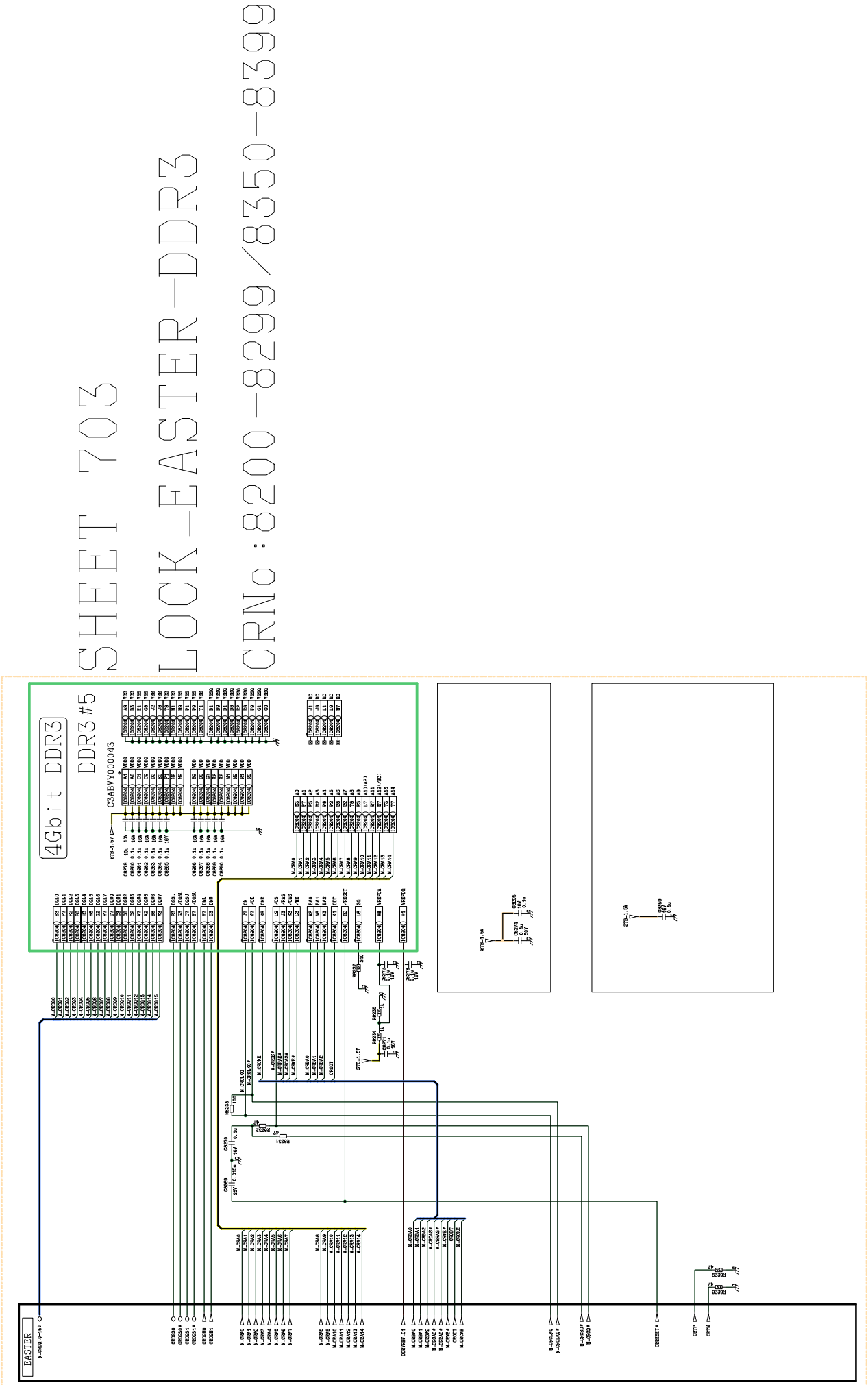
SHEET 703
LOCK_EASTER-DDR3
CRNo:8200-8299/8350-8399
4Gbit DDR3
DDR3#5
C3ABVY000043
EASTER

LOCK/EASTER

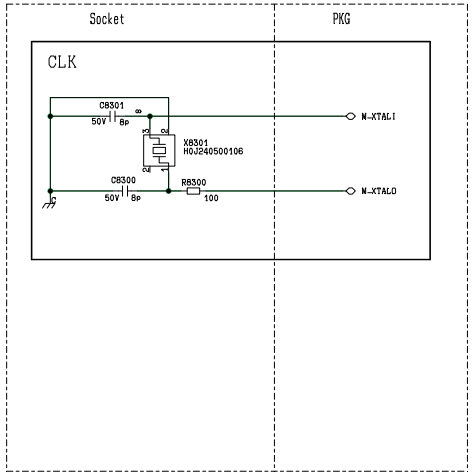

SHEET 704

LOCK_EASTER-DEST

CRNo:8300 - 8349

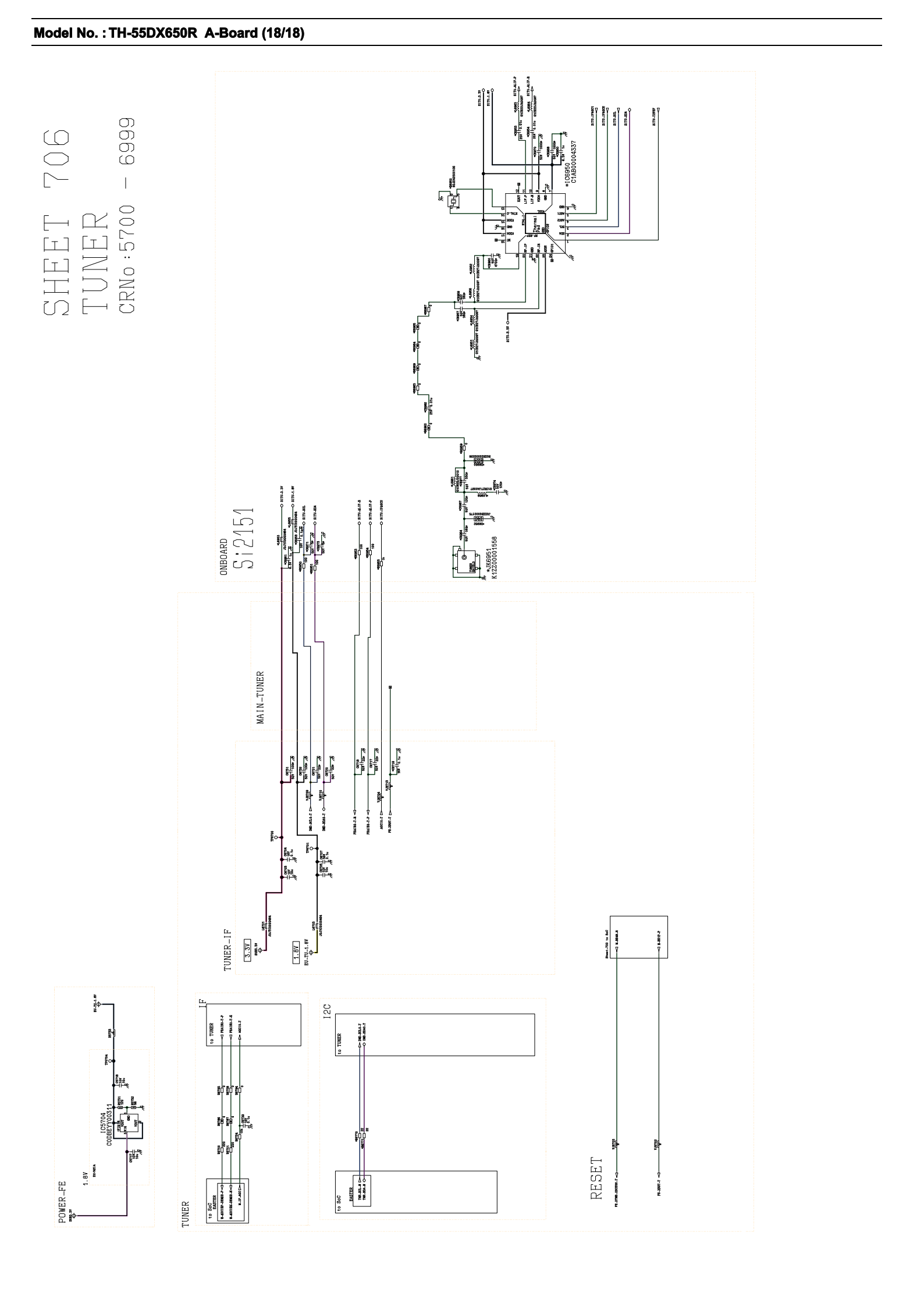
SHEET 706
TUNER
CRNo:5700 - 6999
ONBOARD
Si2151
MAIN-TUNER
TUNER-IF
3.3V
1.8V
POWER-FE
IC5704
CODBEYV00311
TUNER
IF
to TUNER
to SoC
I2C
RESET

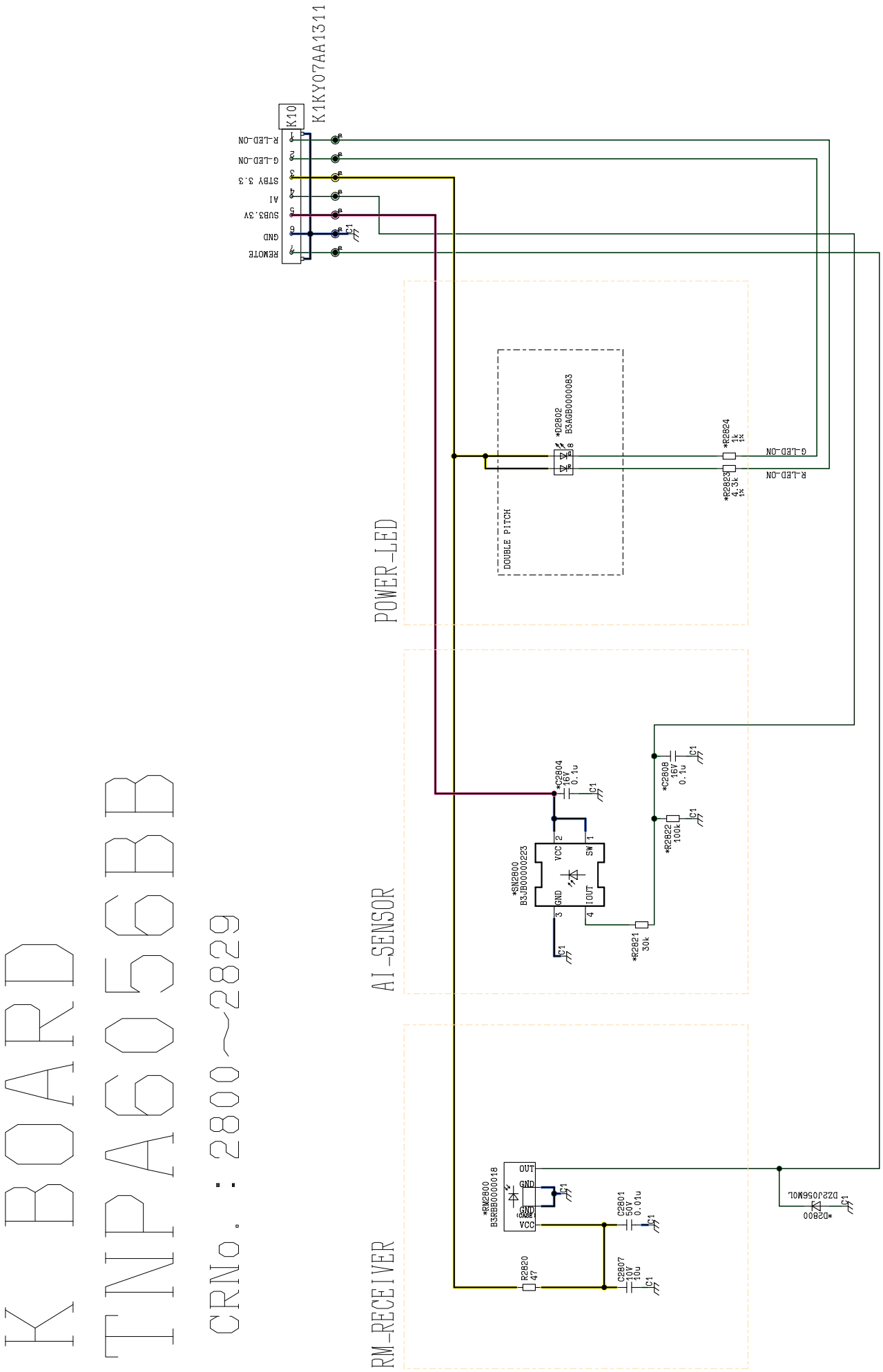
K BOARD
TNPA6056BB
CRNo. : 2800~2829
K1KY07AA1311
K10
REMOTE
GND
SUB3.3V
AI
STBY 3.3
G-LED-ON
R-LED-ON
POWER-LED
DOUBLE PITCH
*D2802
B3AGB0000083
*R2824
1k
1%
*R2823
4.53k
1%
G-LED-ON
R-LED-ON
AI-SENSOR
*C2804
16V
0.1u
*C2808
16V
0.1u
*R2822
100k
*IC2800
B3JB00000223
VCC
SW
GND
IOUT
*R2821
30k
RM-RECEIVER
*DM2800
B3RB0000018
OUT
GND
VCC
C2801
16V
0.01u
C2807
10V
10u
R2820
47
*D2800
D22J056M0L

Model No. : TH-55DX650R P-Board (Foil Side)

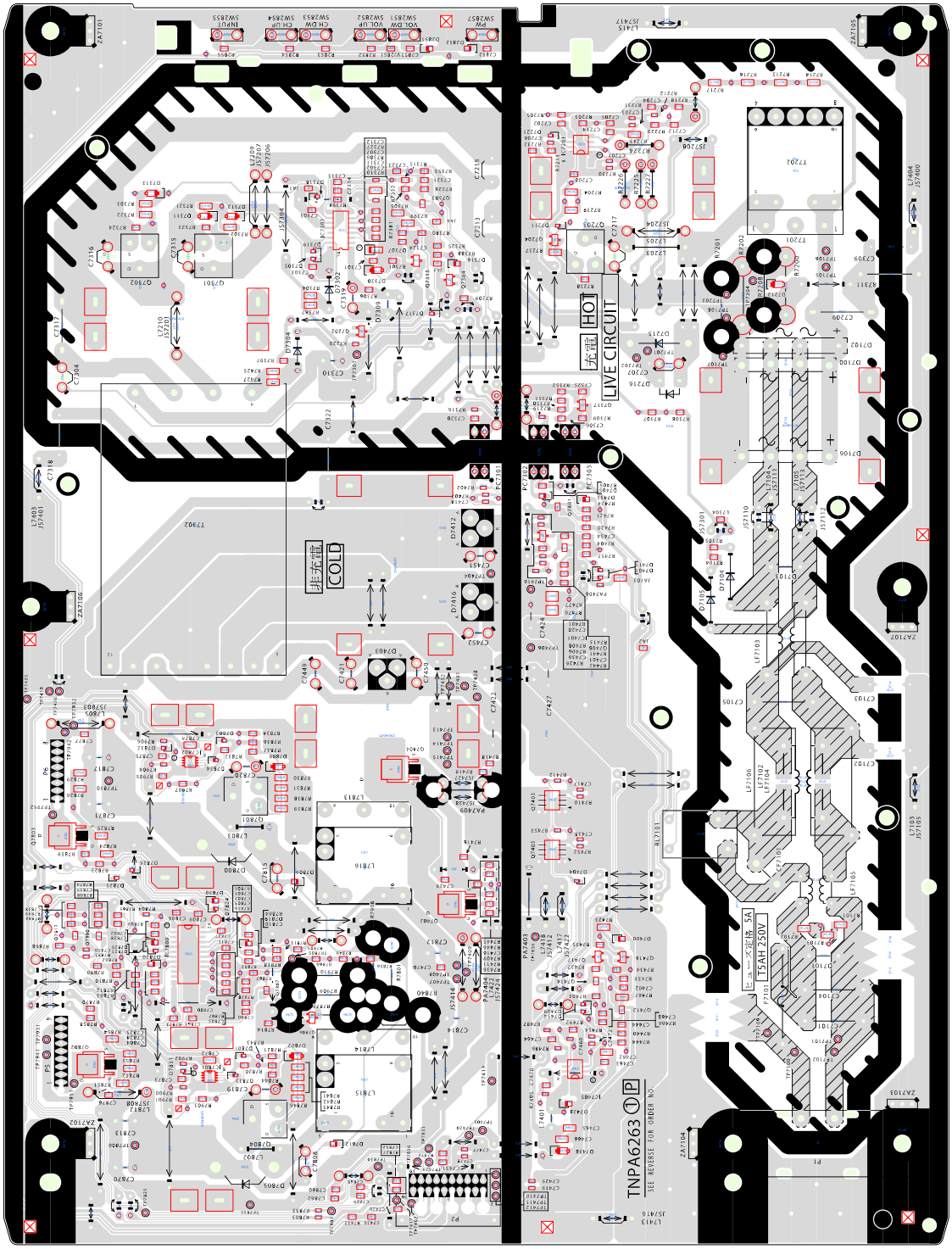

Model No. : TH-55DX650R P-Board (Component Side)

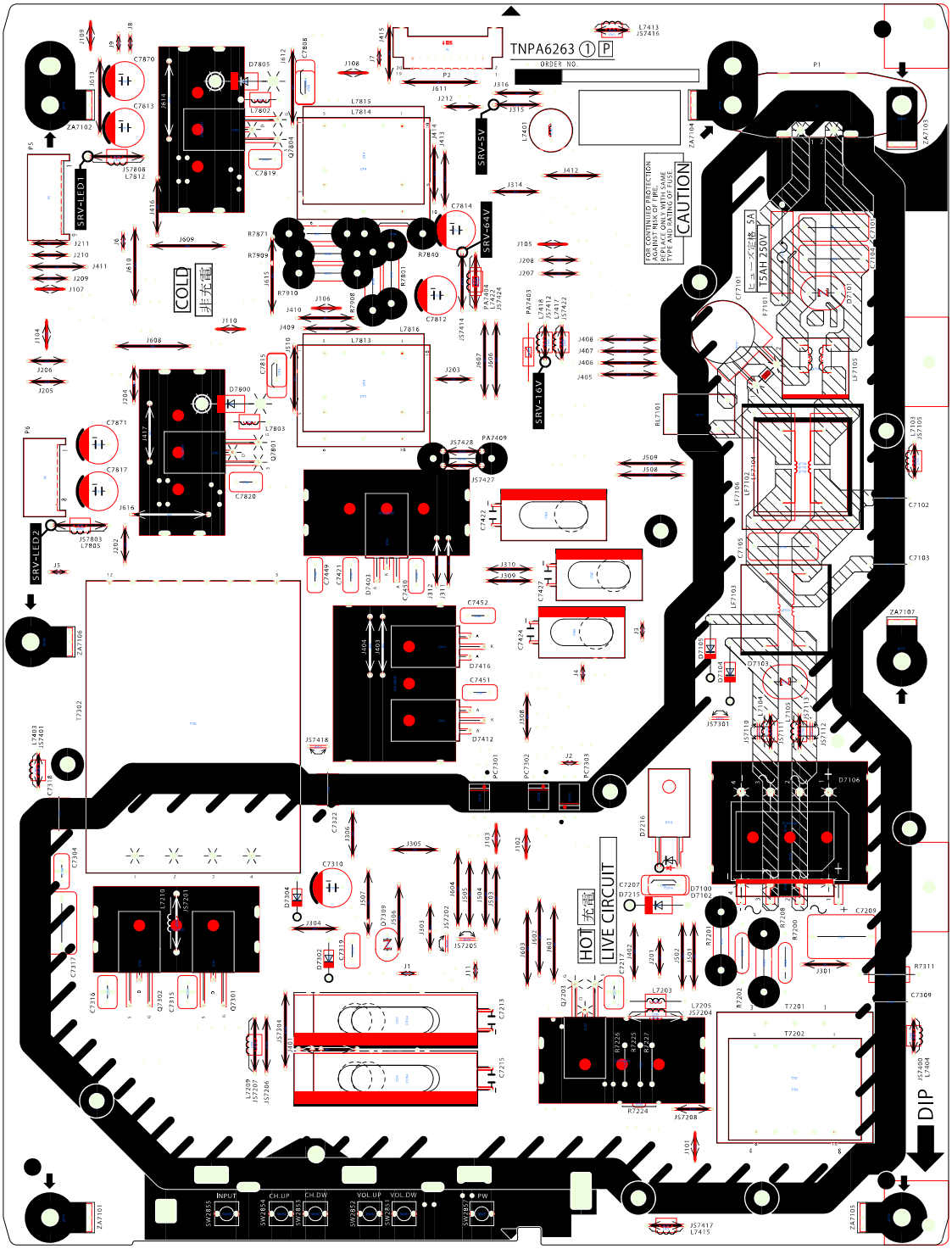

Model No. : TH-55DX650R A-Board (Foil Side)

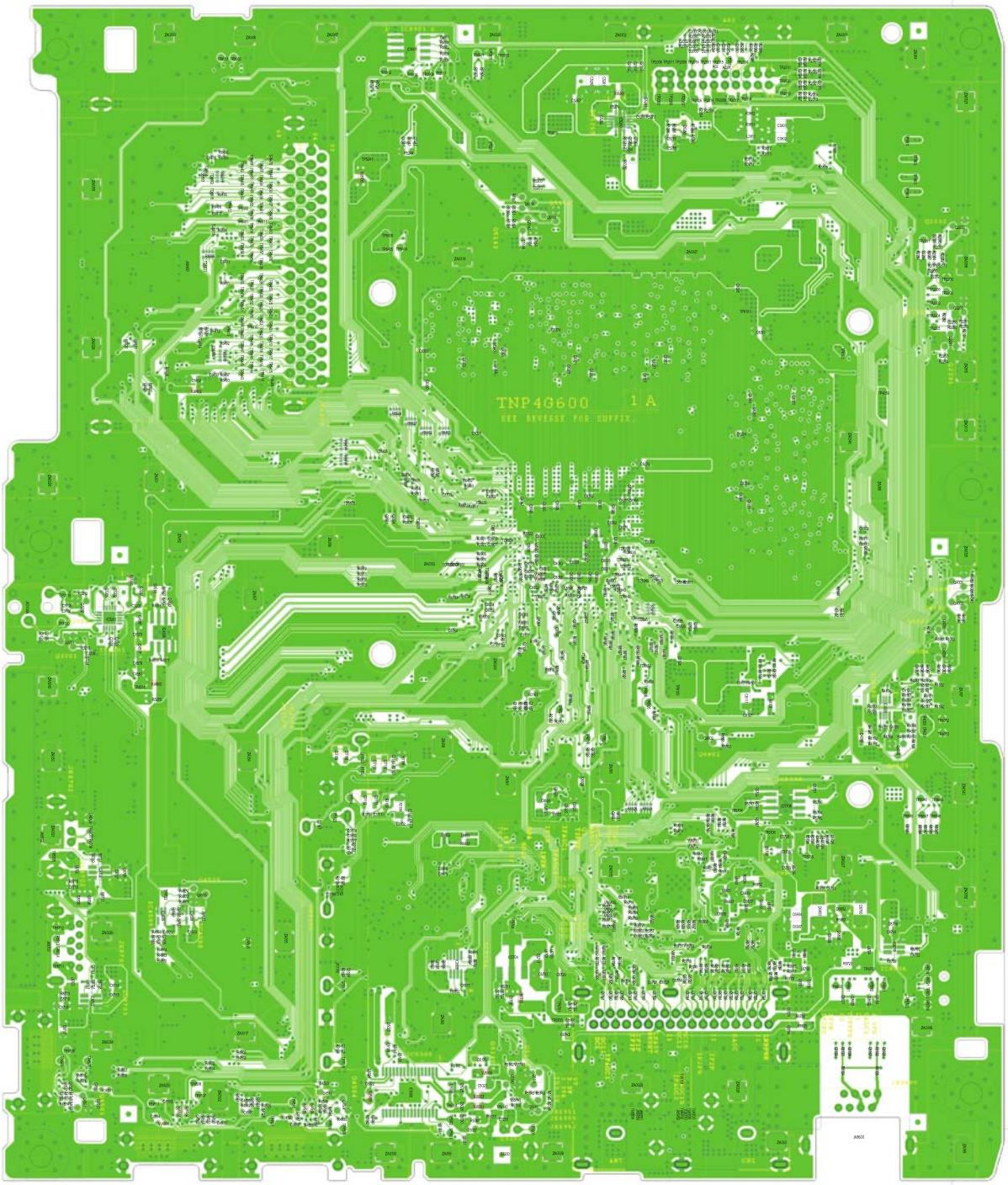

Model No. : TH-55DX650R A-Board (Component Side)

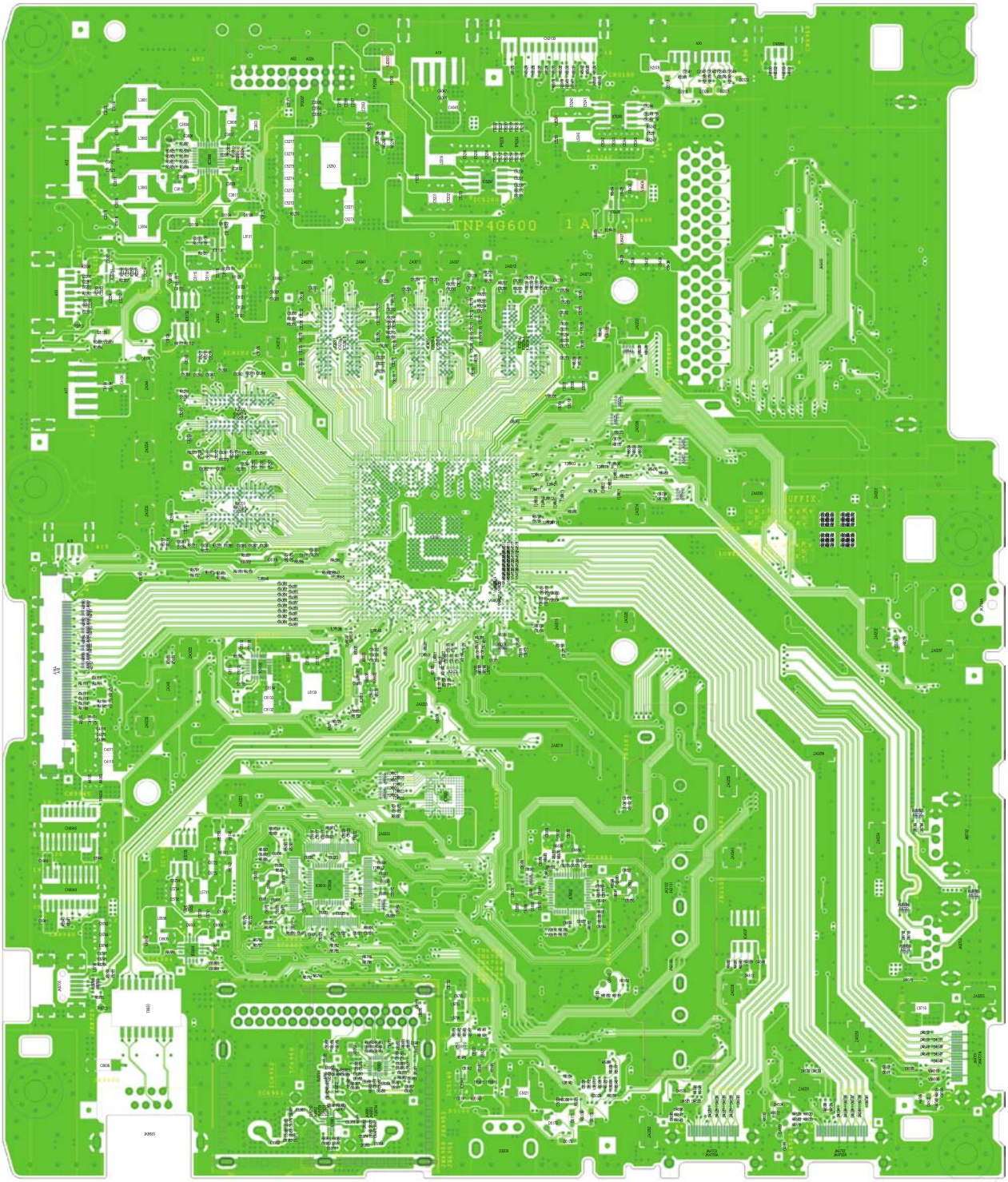

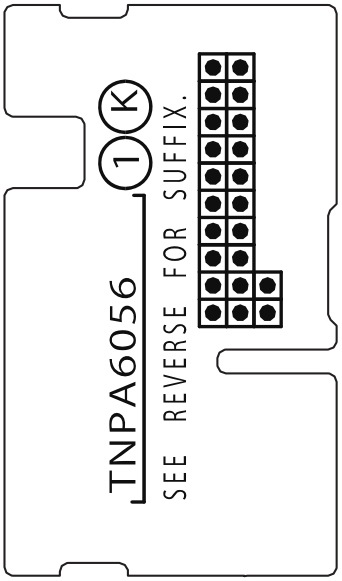

(COMPONENT SIDE)

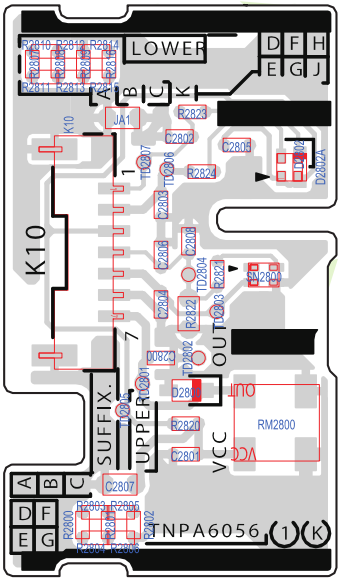

(FOIL SIDE)

Model No. : TH-55DX650R Parts Location

CABINET ASSY

LED PANEL 9

K-PCB 18

VESA METAL

20 PANEL

22 A PCB

10 SIDE AV BRACKET

BACKCOVER 23

LED PANEL CASE

3 SPEAKER

BOTTOM BACKCOVER

KEY BUTTON BRACKET 8

6 STAND METAL

BOTTOM METAL

P-PCB BARRIER

WIFI MODULE 5

WIFI BRACKET

21 P-PCB

3 SPEAKER

7 NAME PLATE

19 PEDESTAL

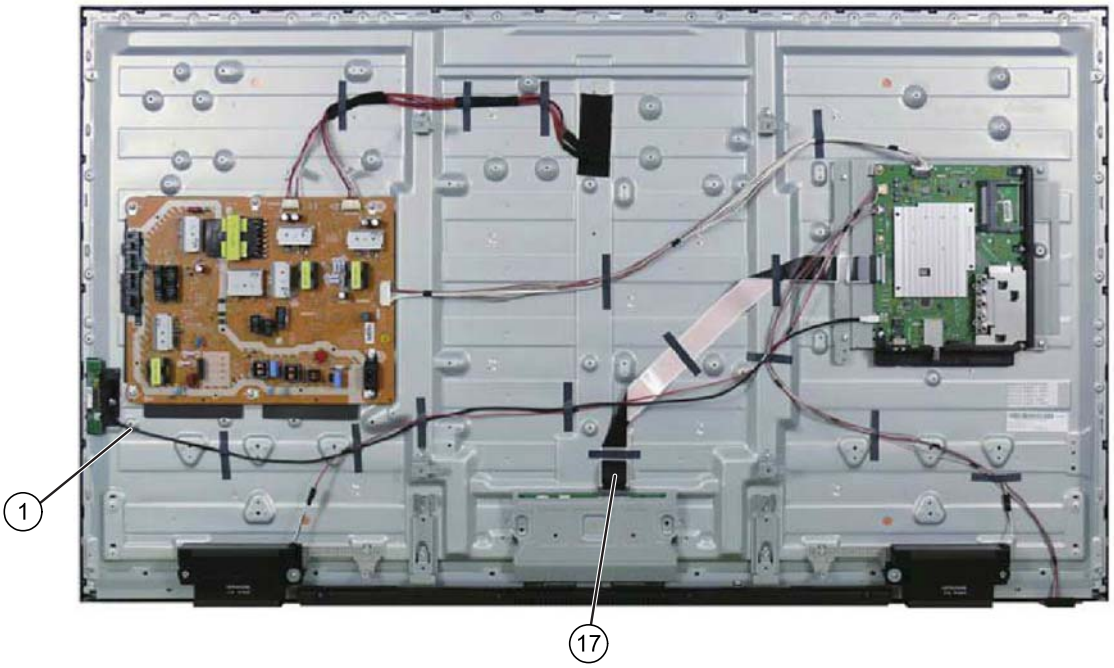

ASSEMBLY CONTENT :

1. Tapping bottom flap carton
2. Fix bottom cushion into packing case
3. Pack tv set with set cover then insert into packing case
4. Fix all tv accessories and packed padestal ass'y to cushions
5. Fix center and top cushion

No	Description	Qty	UOM	Remarks
01	CARTON	1	PC	
02	CUSHION_BOTTOM	1	PC	
03	CUSHION_TOP	1	PC	
04	CUSHION_FRONT	1	PC	
05	SET_BAG	1	PC	
06	PP_TAPE(BTM1.9)	1.90	MT	

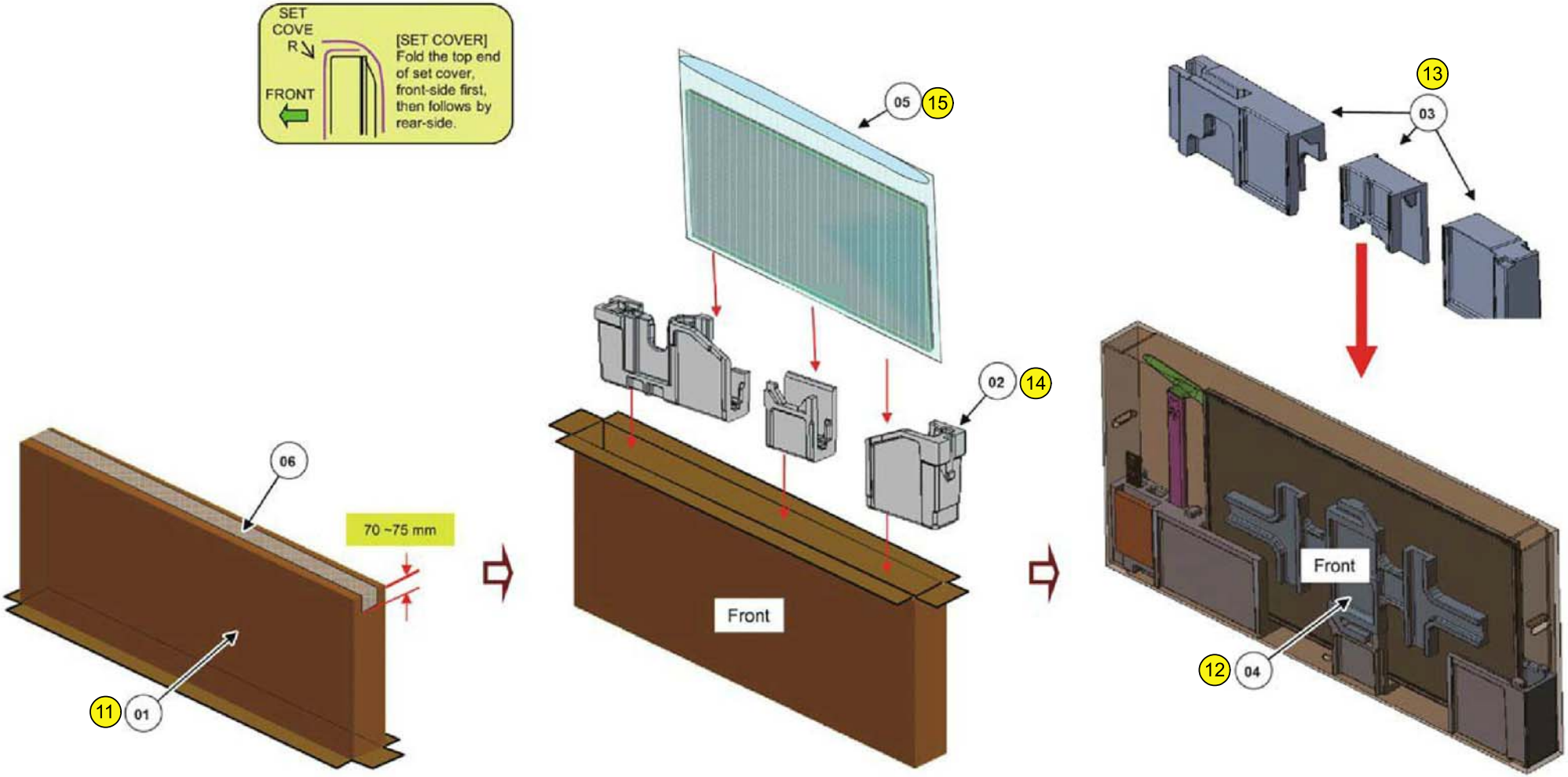

Model No. : TH-55DX650R Packing Exploded View 1

Model No. : TH-55DX650R Packing Exploded View 2

No	Description	Qty	UOM	Remarks
01	PEDESTAL_ASSY-55W4	1	PC	
02	CUSHION_BOTTOM	1	PC	
03	CUSHION_TOP	1	PC	
04	CUSHION_FRONT	1	PC	
05	REMOTE_TRANSMITTER	1	PC	
06	STAND_METAL_ASSY	1	PC	
07	FAN_BAG_ASSY	1	PC	
08	AC_CORD	1	PC	
09	BATTERY	1	PC	
10	PP TAPE	0.1	MT	

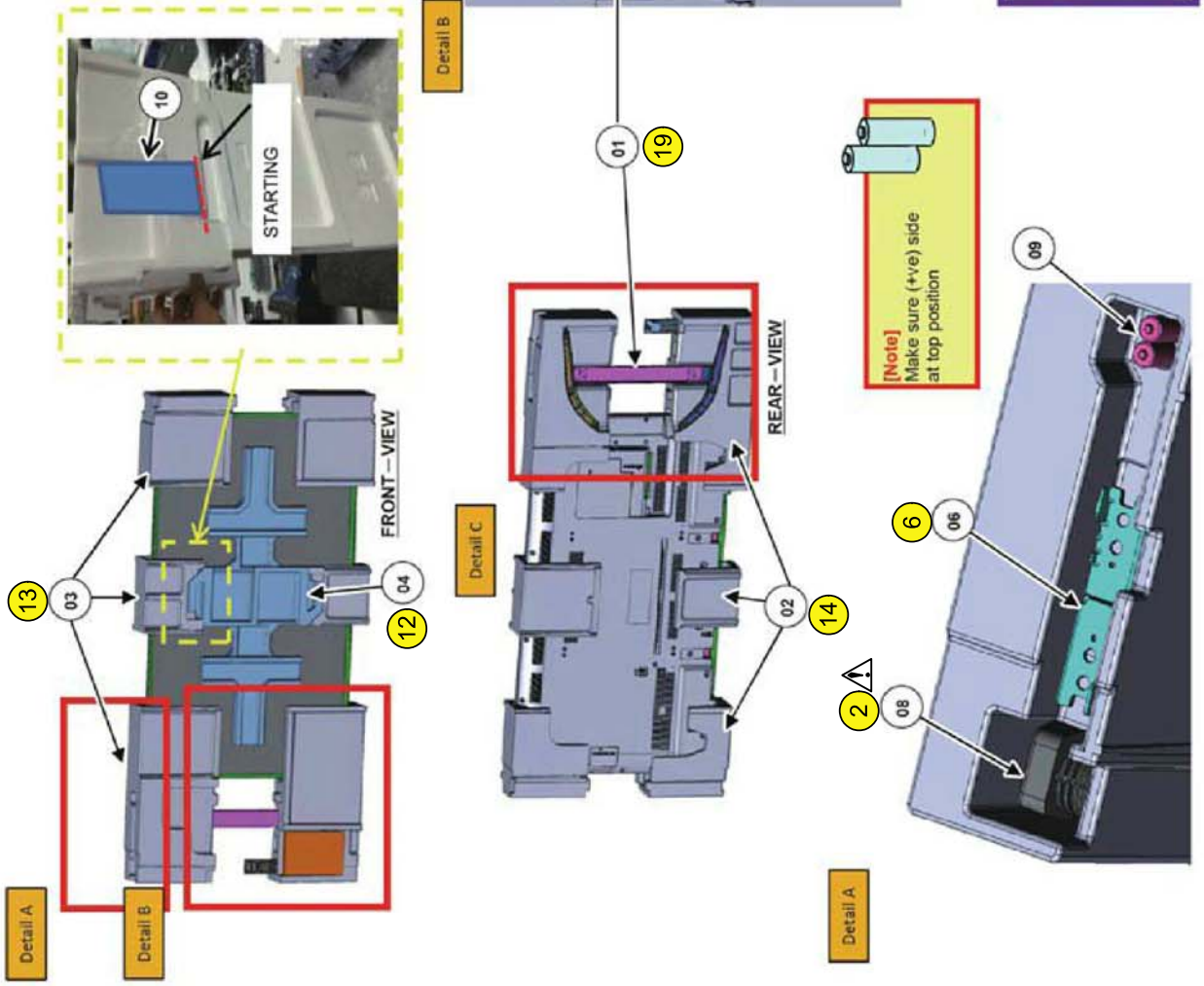

Model No. : TH-55DX650R Parts List

Change	Safety	Ref. No.	Part No.	Part Name & Description	Q'ty	Remarks
		A02A	K1KY16BA0484	CONNECTOR		
		A10	K1KY07BA0483	CONNECTOR		
		A12	K1KY04BA0387	CONNECTOR		
		A16A	K1MY51B00007	CONNECTOR		
		C2000	F1G1H102A830	C 1000PF, 50V		
		C2001	F1G1E103A144	C 0.01UF, 25V		
		C2002	F1G1E103A144	C 0.01UF, 25V		
		C2003	F1K1V106A010	C 10UF, 35V		
		C2004	F1G1H102A830	C 1000PF, 50V		
		C2005	F1G1H102A830	C 1000PF, 50V		
		C2006	F1G1C104A146	C 0.1UF, 16V		
		C2007	F1G1H102A830	C 1000PF, 50V		
		C2010	F1G1H102A830	C 1000PF, 50V		
		C2011	F1G1H102A830	C 1000PF, 50V		
		C2021	F1G1H221A834	C 220PF, 50V		
		C2022	F1G1H221A834	C 220PF, 50V		
		C2023	F1G1H221A834	C 220PF, 50V		
		C2024	F1G1H221A834	C 220PF, 50V		
		C2056	F1G1E103A144	C 0.01UF, 25V		
		C2118	F1G1H102A830	C 1000PF, 50V		
		C2253	F1G1A105A047	C 1UF, 10V		
		C2257	F1G1E103A144	C 0.01UF, 25V		
		C2258	F1G1E103A144	C 0.01UF, 25V		
		C2801	F1H1H103B047	C 0.01UF, 50V		
		C2804	F1H1C104A178	C 0.1UF, 16V		
		C2807	F1J1A106A043	C 10UF, 10V		
		C2808	F1H1C104A178	C 0.1UF, 16V		
		C2851	F1J1H104A902	C 0.1UF, 50V		
		C2852	F1J1H104A902	C 0.1UF, 50V		
		C3109	F1G1H100A963	C 10PF, 50V		
		C3110	F1G1H100A963	C 10PF, 50V		
		C3111	F1G1H100A963	C 10PF, 50V		
		C3112	F1G1H152A946	C 1500PF, 50V		
		C3113	F1G1C103A173	C 0.01UF, 16V		
		C3114	F1G1C103A173	C 0.01UF, 16V		
		C3115	F1G1C103A173	C 0.01UF, 16V		
		C3116	F1G1C103A173	C 0.01UF, 16V		
		C3117	F1G1A105A047	C 1UF, 10V		
		C3124	F1G1A105A047	C 1UF, 10V		
		C3125	F1G1A105A047	C 1UF, 10V		
		C3127	F1G1A473A079	C 0.047UF, 10V		
		C3128	F1G1H471A834	C 470PF, 50V		
		C3129	F1G1H471A834	C 470PF, 50V		
		C3163	F1G1H101A948	C 100PF, 50V		
		C3164	F1G1H101A948	C 100PF, 50V		
		C3166	F1G1H100A963	C 10PF, 50V		
		C3167	F1G1H100A963	C 10PF, 50V		
		C3168	F1G1H100A963	C 10PF, 50V		
		C3200	F1G1C104A146	C 0.1UF, 16V		
		C3801	F1K1E106A167	C 10UF, 25V		
		C3802	F1K1E106A167	C 10UF, 25V		
		C3803	F1K1E106A167	C 10UF, 25V		
		C3806	F1J1E105A287	C 1UF, 25V		
		C3807	F1J1E105A287	C 1UF, 25V		
		C3808	F1J1E105A287	C 1UF, 25V		
		C3809	F1J1E105A287	C 1UF, 25V		
		C3812	F1H1E105A153	C 1UF, 25V		
		C3813	F1J1E224A272	C 0.22UF, 25V		
		C3814	F1H1E104A161	C 0.1UF, 25V		
		C3815	F1H1E104A161	C 0.1UF, 25V		
		C3816	F1J1E224A272	C 0.22UF, 25V		

Model No. : TH-55DX650R Parts List

Change	Safety	Ref. No.	Part No.	Part Name & Description	Q'ty	Remarks
		C3817	F1H1E104A161	C 0.1UF, 25V		
		C3818	F1H1E104A161	C 0.1UF, 25V		
		C4050	F1G1C104A146	C 0.1UF, 16V		
		C4051	F1G1C104A146	C 0.1UF, 16V		
		C4052	F1G1C104A146	C 0.1UF, 16V		
		C4053	F1G1C104A146	C 0.1UF, 16V		
		C4054	F1G1C104A146	C 0.1UF, 16V		
		C4055	F1G1C104A146	C 0.1UF, 16V		
		C4056	F1G1C104A146	C 0.1UF, 16V		
		C4057	F1G1C104A146	C 0.1UF, 16V		
		C4058	F1G1C104A146	C 0.1UF, 16V		
		C4059	F1G1C104A146	C 0.1UF, 16V		
		C4060	F1G1C104A146	C 0.1UF, 16V		
		C4061	F1G1C104A146	C 0.1UF, 16V		
		C4062	F1G1C104A146	C 0.1UF, 16V		
		C4063	F1G1C104A146	C 0.1UF, 16V		
		C4064	F1G1C104A146	C 0.1UF, 16V		
		C4065	F1G1C104A146	C 0.1UF, 16V		
		C4069	F1G1H101A948	C 100PF, 50V		
		C4070	F1G1E103A144	C 0.01UF, 25V		
		C4115	F1K1E106A167	C 10UF, 25V		
		C4116	F1G1E103A144	C 0.01UF, 25V		
		C4117	F1G1E103A144	C 0.01UF, 25V		
		C4118	F1G1E103A144	C 0.01UF, 25V		
		C4119	F1G1H101A948	C 100PF, 50V		
		C4120	F1G1H101A948	C 100PF, 50V		
		C4500	F1H1E105A153	C 1UF, 25V		
		C4578	F1G1A105A047	C 1UF, 10V		
		C4579	F1G1A105A047	C 1UF, 10V		
		C4599	F1G1H101A948	C 100PF, 50V		
		C5020	F1G1A105A047	C 1UF, 10V		
		C5022	F1G1A105A047	C 1UF, 10V		
		C5024	F1G1A105A047	C 1UF, 10V		
		C5025	F1J1E105A287	C 1UF, 25V		
		C5026	F1G1A105A047	C 1UF, 10V		
		C5029	F1H1A225A051	C 2.2UF, 10V		
		C5030	F1G1A105A047	C 1UF, 10V		
		C5031	F1G1A105A047	C 1UF, 10V		
		C5032	F1H1E105A153	C 1UF, 25V		
		C5105	F1G1E103A144	C 0.01UF, 25V		
		C5144	F1H1E105A153	C 1UF, 25V		
		C5201	F1K1E106A167	C 10UF, 25V		
		C5202	F1K1E106A167	C 10UF, 25V		
		C5204	F1J0J2260004	C 22UF, 6.3V		
		C5205	F1J0J2260004	C 22UF, 6.3V		
		C5207	F1G1A105A047	C 1UF, 10V		
		C5208	F1G1E822A144	C 8200 PF, 25V		
		C5209	F1G1H100A963	C 10PF, 50V		
		C5210	F1G1C104A146	C 0.1UF, 16V		
		C5212	F1G1E103A144	C 0.01UF, 25V		
		C5240	F1K1E106A167	C 10UF, 25V		
		C5241	F1K1E106A167	C 10UF, 25V		
		C5242	F1J1A106A043	C 10UF, 10V		
		C5243	F1J1A106A043	C 10UF, 10V		
		C5244	F1J1A106A043	C 10UF, 10V		
		C5245	F1J1A106A043	C 10UF, 10V		
		C5246	F1G1C104A146	C 0.1UF, 16V		
		C5248	F1G1E333A144	C 0.033UF, 25V		
		C5249	F1G1H222A946	C 2200PF, 50V		
		C5260	F1K1E106A167	C 10UF, 25V		
		C5261	F1K1E106A167	C 10UF, 25V		

Model No. : TH-55DX650R Parts List

Change	Safety	Ref. No.	Part No.	Part Name & Description	Q'ty	Remarks
		C5262	F1H1E104A161	C 0.1UF, 25V		
		C5263	F1G1E103A144	C 0.01UF, 25V		
		C5264	F1G1H472A830	C 4700PF, 50V		
		C5265	F1G1H681A571	C 680PF, 50V		
		C5266	F1G1C104A146	C 0.1UF, 16V		
		C5270	F1K1E106A167	C 10UF, 25V		
		C5271	F1K1E106A167	C 10UF, 25V		
		C5272	F1K1E106A167	C 10UF, 25V		
		C5273	F1K1E106A167	C 10UF, 25V		
		C5274	F1K1E106A167	C 10UF, 25V		
		C5717	F1J1A106A043	C 10UF, 10V		
		C5718	F1J1A106A043	C 10UF, 10V		
		C5920	F1G1C104A146	C 0.1UF, 16V		
		C6703	F1J1A106A043	C 10UF, 10V		
		C6704	F1G1C104A146	C 0.1UF, 16V		
		C6705	F1J1A106A043	C 10UF, 10V		
		C6707	F1G1C104A146	C 0.1UF, 16V		
		C6717	F1G1H220A834	C 22PF, 50V		
		C6718	F1G1H220A834	C 22PF, 50V		
		C6719	F1G1C104A146	C 0.1UF, 16V		
		C6720	F1G1H220A834	C 22PF, 50V		
		C6721	F1G1H220A834	C 22PF, 50V		
		C6731	F1G1H101A948	C 100PF, 50V		
		C6732	F1G1H101A948	C 100PF, 50V		
		C6739	F1G1C104A146	C 0.1UF, 16V		
		C6950	F1G0J1050007	C 1.0UF, 6.3V		
		C6953	F1G1E103A144	C 0.01UF, 25V		
		C6954	F1G1E103A144	C 0.01UF, 25V		
		C6957	F1G1H181A834	C 180PF, 50V		
		C6958	F1G1C104A146	C 0.1UF, 16V		
		C6959	F1G1H181A834	C 180PF, 50V		
		C6960	F1G1H472A830	C 4700PF, 50V		
		C6961	F1G0J1050007	C 1.0UF, 6.3V		
		C6964	F1H1H181B052	C 180PF, 50V		
		C6967	F1G1H121A834	C 120PF, 50V		
		C6968	F1G1H102A830	C 1000PF, 50V		
		C6970	F1G1H102A830	C 1000PF, 50V		
		C6971	F1G1H5R0A947	C 5PF, 50V		
		C6973	F1G1H5R0A947	C 5PF, 50V		
		C6974	F1G1H121A834	C 120PF, 50V		
		C6977	F1G1H331A946	C 330PF, 50V		
		C6982	F1G1E103A144	C 0.01UF, 25V		
		C6983	F1G1H102A948	C 1000PF, 50V		
		C6984	F1G1E103A144	C 0.01UF, 25V		
		C6985	F1G0J1050007	C 1.0UF, 6.3V		
		C6986	F1G1H121A834	C 120PF, 50V		
		C6988	F1G1H102A830	C 1000PF, 50V		
		C6989	F1G1H6R0A832	C 6PF, 50V		
	⚠	C7102	F1AAF471A019	C 470PF, 240V		
	⚠	C7103	F1AAF471A019	C 470PF, 240V		
		C7104	F0CAF2240010	C 0.22UF, 250V		
		C7105	F0CAF2240010	C 0.22UF, 250V		
		C7201	F1H1H102B052	C 1000PF, 50V		
		C7202	F1J1H102A909	C 1000PF, 50V		
		C7203	F1H1H104B047	C 0.1UF, 50V		
		C7204	F1J1E474A272	C 0.47UF, 25V		
		C7205	F1J1H103A900	C 0.01UF, 50V		
		C7206	F1H1H104B047	C 0.1UF, 50V		
		C7207	F1A3A471A081	C 470PF, 1KV		
		C7208	F1J1E475A257	C 4.7UF, 25V		
		C7209	ECWFD2W155KC	C 1.5UF, 450V		

Model No. : TH-55DX650R Parts List

Change	Safety	Ref. No.	Part No.	Part Name & Description	Q'ty	Remarks
		C7212	F1J1H223A900	C 0.022UF, 50V		
		C7213	F2A2W6800013	C 68UF, 450V		
		C7214	F1J1H103A900	C 0.01UF, 50V		
		C7215	F2A2W6800013	C 68UF, 450V		
		C7217	F1A3A221A078	C 220PF, 1KV		
		C7301	F1J1H102A909	C 1000PF, 50V		
		C7302	F1J1H223A900	C 0.022UF, 50V		
		C7303	F1J1H105A919	C 1UF, 50V		
		C7304	F1A3A331A079	C 330PF, 1KV		
		C7305	F1J1H105A918	C 1UF, 50V		
		C7307	F1H1H101B052	C 100PF, 50V		
	⚠	C7309	F1AAF471A019	C 470PF, 240V		
		C7310	F2A1V331B899	C 330PF, 35V		
		C7311	F1J1H474A918	C 0.47UF, 50V		
		C7312	F1H1C474A178	C 0.47UF, 16V		
		C7313	F1J1H102A909	C 1000PF, 50V		
		C7314	F1J1H220A906	C 22PF, 50V		
		C7315	F1A3A331A078	C 330PF, 1KV		
		C7316	F1A3A331A078	C 330PF, 1KV		
		C7317	ECWH8273HAC	C 27000PF, 800V		
		C7319	F1A3A101A079	C 100PF, 1KV		
		C7323	F1J1H103A900	C 0.01UF, 50V		
		C7324	F1J1H102A909	C 1000PF, 50V		
		C7325	F1J1H103A900	C 0.01UF, 50V		
		C7401	F1J1H104A902	C 0.1UF, 50V		
		C7402	F1J1E105A287	C 1UF, 25V		
		C7416	F1J1E105A287	C 1UF, 25V		
		C7417	F1H1C105A178	C 1UF, 16V		
		C7418	F1H1H104B047	C 0.1UF, 50V		
		C7422	F2A2A2210034	C 220UF, 100V		
		C7424	F2AZZ2220001	C 2200UF, 240V		
		C7429	F1J1E105A287	C 1UF, 25V		
		C7430	F1J1H102A909	C 1000PF, 50V		
		C7434	F1J1H103A900	C 0.01UF, 50V		
		C7436	F1H1H104B047	C 0.1UF, 50V		
		C7438	F1H1C105A178	C 1UF, 16V		
		C7460	F1H1H222B047	C 2200PF, 50V		
		C7462	F1K1E106A167	C 10UF, 25V		
		C7463	F1J1H104A902	C 0.1UF, 50V		
		C7465	F1K1A226A060	C 22UF, 10V		
		C7466	F1K1A226A060	C 22UF, 10V		
		C7468	F1J1E105A287	C 1UF, 25V		
		C7470	F1J1H104A902	C 0.1UF, 50V		
		C7472	F1H1H103B047	C 0.01UF, 50V		
		C7801	F1J1H103A900	C 0.01UF, 50V		
		C7802	F1J1H103A900	C 0.01UF, 50V		
		C7803	F1J1H104A902	C 0.1UF, 50V		
		C7804	F1J1H223A900	C 0.022UF, 50V		
		C7805	F1J1H103A900	C 0.01UF, 50V		
		C7806	F1J1E105A287	C 1UF, 25V		
		C7807	F1J1E474A272	C 0.47UF, 25V		
		C7808	F1A3A151A078	C 150PF, 1KV		
		C7809	F1J1E105A287	C 1UF, 25V		
		C7810	F1J1E224A272	C 0.22UF, 25V		
		C7813	F2A2E1000034	C 10UF, 250V		
		C7814	F2A2A5600005	C 56UF, 100V		
		C7815	F1A3A151A078	C 150PF, 1KV		
		C7817	F2A2E1000034	C 10UF, 250V		
		C7819	F1A3A101A078	C 100PF, 1KV		
		C7820	F1A3A101A078	C 100PF, 1KV		
		C7824	F1J1E224A272	C 0.22UF, 25V		

Model No. : TH-55DX650R Parts List

Change	Safety	Ref. No.	Part No.	Part Name & Description	Q'ty	Remarks
		C7827	F1J1H222A900	C 2200PF, 50V		
		C7828	F1J1H222A900	C 2200PF, 50V		
		C7838	F1J1E105A287	C 1UF, 25V		
		C7839	F1J1H102A909	C 1000PF, 50V		
		C7850	F1H1H101B052	C 100PF, 50V		
		C7870	F2A2E1000034	C 10UF, 250V		
		C7871	F2A2E1000034	C 10UF, 250V		
		C7872	F1K1E105A167	C 1UF, 25V		
		C7874	F1K1E105A167	C 1UF, 25V		
		C7876	F1J2E1030004	C 0.01UF, 250V		
		C7877	F1J2E1030004	C 0.01UF, 250V		
		C8000	F1G1C104A146	C 0.1UF, 16V		
		C8001	F1G1C104A146	C 0.1UF, 16V		
		C8002	F1J1A106A043	C 10UF, 10V		
		C8003	F1G1C104A146	C 0.1UF, 16V		
		C8004	F1G1C104A146	C 0.1UF, 16V		
		C8005	F1G1C104A146	C 0.1UF, 16V		
		C8006	F1G1C104A146	C 0.1UF, 16V		
		C8007	F1G1C104A146	C 0.1UF, 16V		
		C8008	F1G1C104A146	C 0.1UF, 16V		
		C8009	F1J0G2260001	C 22UF, 4V		
		C8010	F1G1C104A146	C 0.1UF, 16V		
		C8011	F1J0G2260001	C 22UF, 4V		
		C8012	F1H0J4750004	C 4.7UF, 6.3V		
		C8014	F1G1C104A146	C 0.1UF, 16V		
		C8015	F1G1C104A146	C 0.1UF, 16V		
		C8016	F1J1A106A043	C 10UF, 10V		
		C8017	F1G1C104A146	C 0.1UF, 16V		
		C8021	F1G1A105A047	C 1UF, 10V		
		C8022	F1G1C104A146	C 0.1UF, 16V		
		C8023	F1G1A105A047	C 1UF, 10V		
		C8024	F1G1C104A146	C 0.1UF, 16V		
		C8025	F1G1C104A146	C 0.1UF, 16V		
		C8026	F1G1C104A146	C 0.1UF, 16V		
		C8027	F1G1C104A146	C 0.1UF, 16V		
		C8028	F1G1A105A047	C 1UF, 10V		
		C8029	F1H0J4750004	C 4.7UF, 6.3V		
		C8030	F1G1C104A146	C 0.1UF, 16V		
		C8031	F1G1C104A146	C 0.1UF, 16V		
		C8034	F1G1C104A146	C 0.1UF, 16V		
		C8035	F1G1A105A047	C 1UF, 10V		
		C8036	F1G1C104A146	C 0.1UF, 16V		
		C8038	F1G1C104A146	C 0.1UF, 16V		
		C8039	F1G1C104A146	C 0.1UF, 16V		
		C8040	F1J0G2260001	C 22UF, 4V		
		C8041	F1G1C104A146	C 0.1UF, 16V		
		C8042	F1G1C104A146	C 0.1UF, 16V		
		C8043	F1G1C104A146	C 0.1UF, 16V		
		C8044	F1G1C104A146	C 0.1UF, 16V		
		C8045	F1G1C104A146	C 0.1UF, 16V		
		C8046	F1H0J4750004	C 4.7UF, 6.3V		
		C8047	F1H0J4750004	C 4.7UF, 6.3V		
		C8048	F1H0J4750004	C 4.7UF, 6.3V		
		C8049	F1H0J4750004	C 4.7UF, 6.3V		
		C8050	F1G1A105A047	C 1UF, 10V		
		C8051	F1G1C104A146	C 0.1UF, 16V		
		C8052	F1G1A105A047	C 1UF, 10V		
		C8054	F1G1C104A146	C 0.1UF, 16V		
		C8058	F1J1A106A043	C 10UF, 10V		
		C8059	F1G1A105A047	C 1UF, 10V		
		C8060	F1G1C104A146	C 0.1UF, 16V		

Model No. : TH-55DX650R Parts List

Change	Safety	Ref. No.	Part No.	Part Name & Description	Q'ty	Remarks
		C8061	F1J0G2260001	C 22UF, 4V		
		C8062	F1J0G2260001	C 22UF, 4V		
		C8100	F1G1H222A946	C 2200PF, 50V		
		C8101	F1G1C104A146	C 0.1UF, 16V		
		C8102	F1K1E106A167	C 10UF, 25V		
		C8103	F1K1E106A167	C 10UF, 25V		
		C8104	F1H1E104A161	C 0.1UF, 25V		
		C8105	F1G1E332A172	C 3300PF, 25V		
		C8106	F1J0G2260001	C 22UF, 4V		
		C8107	F1J0G2260001	C 22UF, 4V		
		C8108	F1J0G2260001	C 22UF, 4V		
		C8109	F1H1E105A153	C 1UF, 25V		
		C8110	F1J1E475A257	C 4.7UF, 25V		
		C8112	F1H1E104A161	C 0.1UF, 25V		
		C8114	F1K1E106A167	C 10UF, 25V		
		C8116	F1G1C104A146	C 0.1UF, 16V		
		C8121	F1J0G2260001	C 22UF, 4V		
		C8122	F1J0G2260001	C 22UF, 4V		
		C8124	F1G1A105A047	C 1UF, 10V		
		C8125	F1G1A105A047	C 1UF, 10V		
		C8126	F1G1C104A146	C 0.1UF, 16V		
		C8200	F1G1E153A144	C 0.015UF, 25V		
		C8201	F1G1C104A146	C 0.1UF, 16V		
		C8202	F1G1C104A146	C 0.1UF, 16V		
		C8203	F1G1C104A146	C 0.1UF, 16V		
		C8204	F1G1C104A146	C 0.1UF, 16V		
		C8205	F1G1C104A146	C 0.1UF, 16V		
		C8206	F1G1C104A146	C 0.1UF, 16V		
		C8207	F1G1C104A146	C 0.1UF, 16V		
		C8208	F1J1A106A043	C 10UF, 10V		
		C8209	F1G1C104A146	C 0.1UF, 16V		
		C8210	F1G1C104A146	C 0.1UF, 16V		
		C8211	F1G1C104A146	C 0.1UF, 16V		
		C8212	F1G1C104A146	C 0.1UF, 16V		
		C8213	F1G1C104A146	C 0.1UF, 16V		
		C8214	F1G1C104A146	C 0.1UF, 16V		
		C8215	F1G1C104A146	C 0.1UF, 16V		
		C8216	F1G1C104A146	C 0.1UF, 16V		
		C8217	F1G1C104A146	C 0.1UF, 16V		
		C8218	F1G1C104A146	C 0.1UF, 16V		
		C8219	F1G1C104A146	C 0.1UF, 16V		
		C8220	F1G1C104A146	C 0.1UF, 16V		
		C8221	F1G1C104A146	C 0.1UF, 16V		
		C8222	F1G1C104A146	C 0.1UF, 16V		
		C8223	F1G1C104A146	C 0.1UF, 16V		
		C8224	F1G1C104A146	C 0.1UF, 16V		
		C8225	F1J1A106A043	C 10UF, 10V		
		C8226	F1G1C104A146	C 0.1UF, 16V		
		C8227	F1G1C104A146	C 0.1UF, 16V		
		C8228	F1G1C104A146	C 0.1UF, 16V		
		C8229	F1G1C104A146	C 0.1UF, 16V		
		C8230	F1G1C104A146	C 0.1UF, 16V		
		C8231	F1G1C104A146	C 0.1UF, 16V		
		C8232	F1G1C104A146	C 0.1UF, 16V		
		C8233	F1G1C104A146	C 0.1UF, 16V		
		C8234	F1G1C104A146	C 0.1UF, 16V		
		C8235	F1G1C104A146	C 0.1UF, 16V		
		C8236	F1G1C104A146	C 0.1UF, 16V		
		C8237	F1G1E153A144	C 0.015UF, 25V		
		C8238	F1G1C104A146	C 0.1UF, 16V		
		C8239	F1G1C104A146	C 0.1UF, 16V		

Model No. : TH-55DX650R Parts List

Change	Safety	Ref. No.	Part No.	Part Name & Description	Q'ty	Remarks
		C8240	F1G1C104A146	C 0.1UF, 16V		
		C8241	F1G1C104A146	C 0.1UF, 16V		
		C8242	F1G1C104A146	C 0.1UF, 16V		
		C8243	F1G1C104A146	C 0.1UF, 16V		
		C8244	F1G1C104A146	C 0.1UF, 16V		
		C8245	F1J1A106A043	C 10UF, 10V		
		C8246	F1G1C104A146	C 0.1UF, 16V		
		C8247	F1G1C104A146	C 0.1UF, 16V		
		C8248	F1G1C104A146	C 0.1UF, 16V		
		C8249	F1G1C104A146	C 0.1UF, 16V		
		C8250	F1G1C104A146	C 0.1UF, 16V		
		C8251	F1G1C104A146	C 0.1UF, 16V		
		C8252	F1G1C104A146	C 0.1UF, 16V		
		C8253	F1G1C104A146	C 0.1UF, 16V		
		C8254	F1G1C104A146	C 0.1UF, 16V		
		C8255	F1G1C104A146	C 0.1UF, 16V		
		C8256	F1J1A106A043	C 10UF, 10V		
		C8257	F1G1C104A146	C 0.1UF, 16V		
		C8258	F1G1C104A146	C 0.1UF, 16V		
		C8259	F1G1C104A146	C 0.1UF, 16V		
		C8260	F1G1C104A146	C 0.1UF, 16V		
		C8261	F1G1C104A146	C 0.1UF, 16V		
		C8262	F1G1C104A146	C 0.1UF, 16V		
		C8263	F1G1C104A146	C 0.1UF, 16V		
		C8264	F1G1C104A146	C 0.1UF, 16V		
		C8265	F1G1C104A146	C 0.1UF, 16V		
		C8266	F1G1C104A146	C 0.1UF, 16V		
		C8267	F1G1C104A146	C 0.1UF, 16V		
		C8268	F1G1C104A146	C 0.1UF, 16V		
		C8269	F1G1E153A144	C 0.015UF, 25V		
		C8270	F1G1C104A146	C 0.1UF, 16V		
		C8271	F1G1C104A146	C 0.1UF, 16V		
		C8272	F1G1C104A146	C 0.1UF, 16V		
		C8273	F1G1C104A146	C 0.1UF, 16V		
		C8274	F1J1H104A902	C 0.1UF, 50V		
		C8279	F1J1A106A043	C 10UF, 10V		
		C8280	F1G1C104A146	C 0.1UF, 16V		
		C8281	F1G1C104A146	C 0.1UF, 16V		
		C8282	F1G1C104A146	C 0.1UF, 16V		
		C8283	F1G1C104A146	C 0.1UF, 16V		
		C8284	F1G1C104A146	C 0.1UF, 16V		
		C8285	F1G1C104A146	C 0.1UF, 16V		
		C8286	F1G1C104A146	C 0.1UF, 16V		
		C8287	F1G1C104A146	C 0.1UF, 16V		
		C8288	F1G1C104A146	C 0.1UF, 16V		
		C8289	F1G1C104A146	C 0.1UF, 16V		
		C8290	F1G1C104A146	C 0.1UF, 16V		
		C8295	F1G1C104A146	C 0.1UF, 16V		
		C8300	F1G1H8R0A963	C 8PF, 50V		
		C8301	F1G1H8R0A963	C 8PF, 50V		
		C8359	F1G1C104A146	C 0.1UF, 16V		
		C8601	F1G1C103A173	C 0.01UF, 16V		
		C8602	F1H1C104A178	C 0.1UF, 16V		
		C8603	F1H1C104A178	C 0.1UF, 16V		
		C8604	F1G1C103A173	C 0.01UF, 16V		
		C8610	F1G1A105A047	C 1UF, 10V		
		C8611	F1G1A105A047	C 1UF, 10V		
		C8706	F1J1A106A043	C 10UF, 10V		
		C8707	F1G1C104A146	C 0.1UF, 16V		
		C8708	F1J1A106A043	C 10UF, 10V		
		C8709	F1J1A106A043	C 10UF, 10V		

Model No. : TH-55DX650R Parts List

Change	Safety	Ref. No.	Part No.	Part Name & Description	Q'ty	Remarks
		C8710	F1G1C104A146	C 0.1UF, 16V		
		C8712	F1G1C104A146	C 0.1UF, 16V		
		C8713	F1G1C104A146	C 0.1UF, 16V		
		C8714	F1J1A106A043	C 10UF, 10V		
		C8715	F1G1C104A146	C 0.1UF, 16V		
		C8717	F1J1A106A043	C 10UF, 10V		
		C8718	F1J1A106A043	C 10UF, 10V		
		C8719	F1G1C104A146	C 0.1UF, 16V		
		C8739	F1J1A106A043	C 10UF, 10V		
		C8740	F1G1C104A146	C 0.1UF, 16V		
		C8742	F1J1A106A043	C 10UF, 10V		
		C8744	F1J1A106A043	C 10UF, 10V		
		C8745	F1G1C104A146	C 0.1UF, 16V		
		C8811	F1G1C104A146	C 0.1UF, 16V		
		C8812	F1G1A105A047	C 1UF, 10V		
		C8921	F1G1C104A146	C 0.1UF, 16V		
		C8923	F1J1A106A043	C 10UF, 10V		
		C8924	F1J1A106A043	C 10UF, 10V		
		C8925	F1G1C104A146	C 0.1UF, 16V		
		C8926	F1G1C104A146	C 0.1UF, 16V		
		C8927	F1G1H100A948	C 10PF, 50V		
		C8928	F1H1E105A153	C 1UF, 25V		
	⚠	CF7101	D4CAY3R90003	THERMISTOR		
		D2800	DZ2J056M0L	DIODE		
		D2802	B3AGB0000083	LED		
		D2851	DZ2J068M0L	DIODE		
		D3108	DZ2J140M0L	DIODE		
		D3109	DZ2J140M0L	DIODE		
		D3110	DZ2J140M0L	DIODE		
		D3111	DZ2J140M0L	DIODE		
		D3112	DZ2J140M0L	DIODE		
		D3113	DZ2J140M0L	DIODE		
		D3200	K7AAAY000019	CHIP DIODE		
		D4516	B0ACRC000001	DIODE		
		D5027	DZ2J033M0L	DIODE		
		D5140	B0ADCK000001	DIODE		
		D5170	DA2J10100L	DIODE		
		D5171	DZ2J180M0L	DIODE		
		D5172	B0ADCK000001	DIODE		
		D5173	DZ2J062M0L	DIODE		
		D5174	B0ADCK000001	DIODE		
		D5175	DZ2J043M0L	DI0DE		
		D5178	DA2J10100L	DIODE		
		D6950	B0ZBZ0000226	DIODE		
		D6952	J0ZZB0000175	DIODE		
		D7100	B0FBAR000047	DIODE		
	⚠	D7101	D4EAY621A216	DIODE		
		D7104	B0AAMT000014	DIODE		
		D7105	B0AAMT000014	DIODE		
		D7211	B0ACCD000008	DIODE		
		D7215	B0HAPR000013	DIODE		
		D7221	B0ACCD000008	DIODE		
		D7302	B0HAKR000004	DIODE		
		D7304	B0HAGQ000001	DIODE		
		D7305	B0ACCD000008	DIODE		
		D7307	B0BC02700041	DIODE		
		D7312	B0JCMG000043	DIODE		
		D7313	B0JCMG000043	DIODE		
		D7317	B0ACCD000008	DIODE		
		D7318	B0ACCD000008	DIODE		
		D7319	B0ACCD000008	DIODE		

Model No. : TH-55DX650R Parts List

Change	Safety	Ref. No.	Part No.	Part Name & Description	Q'ty	Remarks
		D7320	B0BC015A0655	DIODE		
		D7401	B0ACCD000008	DIODE		
		D7403	B0FBCN000017	DIODE		
		D7404	B0ACCD000008	DIODE		
		D7405	DA2J10100L	DIODE		
		D7409	B0ACCD000008	DIODE		
		D7411	B0ACCD000008	DIODE		
		D7412	B0JBSL000047	DIODE		
		D7416	B0JBSL000047	DIODE		
		D7428	B0JCPE000051	DIODE		
		D7438	B0BC6R8A0654	DIODE		
		D7800	B0HAPR000013	DIODE		
		D7801	B0ACCD000008	DIODE		
		D7803	B0ACCD000008	DIODE		
		D7805	B0HAPR000013	DIODE		
		D7809	DA2JF2300L	DIODE		
		D7812	DA2JF2300L	DIODE		
		D7823	B0ACCD000008	DIODE		
		D7824	B0ACCD000008	DIODE		
		D7825	B0ACCD000008	DIODE		
		D7826	B0ACCD000008	DIODE		
		D7829	DZ2J051M0L	DIODE		
		D7830	DZ2J051M0L	DIODE		
		D7831	B0ACCD000008	DIODE		
		D7832	B0ACCD000008	DIODE		
		D8103	B0ACRC000001	DIODE		
		D8104	B0ACRC000001	DIODE		
		D8105	B0ADCK000001	DIODE		
		D8106	B0JCGD000016	DIODE		
		F2000	ERBRD4R00X	FUSE		
		F5200	ERBRD4R00X	FUSE		
	⚠	F7101	K5E502YYA213	FUSE		
		FL8702	EXC24CE900U	NOISE FILTER		
		FL8705	EXC24CE900U	NOISE FILTER		
		FL8708	EXC24CE900U	NOISE FILTER		
		IC3800	C1AB00003984	IC		
		IC4506	C0DBEYY00175	IC		
		IC5000	AN34043AAVF	IC		
		IC5200	C0DBAYY02083	IC		
		IC5240	C0DBAYY02432	IC		
		IC5260	C0DBAYY02552	IC		
		IC5704	C0DBEYY00311	IC		
		IC5911	C1ZBZ0004368	IC		
		IC6950	C1AB00004337	IC		
		IC6952	C1AB00004174	IC		
		IC7201	C0DBBYY00058	IC		
		IC7301	C0DBAYY02540	IC		
		IC7401	C0DBZYY00531	IC		
		IC7405	B1LBZ0000070	IC		
		IC7800	C0ZBZ0002179	IC		
		IC7801	C0ZBZ0001936	IC		
		IC7802	C0ZBZ0001936	IC		
		IC8000	C1AB00004367	IC		
		IC8100	NN30332A-VB	IC		
		IC8101	C0DBAYY02531	IC		
		IC8102	C0DBEYY00226	IC		
		IC8200	C3ABVY000043	IC		
		IC8201	C3ABVY000043	IC		
		IC8202	C3ABVY000043	IC		
		IC8203	C3ABVY000043	IC		
		IC8204	C3ABVY000043	IC		

Model No. : TH-55DX650R Parts List

Change	Safety	Ref. No.	Part No.	Part Name & Description	Q'ty	Remarks
		IC8601	C0DBGYY00887	IC		
		IC8702	C0DBZYY00723	IC		
		IC8703	C0DBZYY00723	IC		
		IC8706	C0DBZYY00764	IC		
		IC8920	TVRU145	ROM VERSION ASSY		
		JA1	D0GDR00J0004	M 0 OHM, J, 1/8W		
		JA103	D0GFR00J0005	M 0 OHM, J, 1/3W		
		JA2	D0GDR00J0004	M 0 OHM, J, 1/8W		
		JA3	D0GDR00J0004	M 0 OHM, J, 1/8W		
		JK3101	K1U511D00001	TERMINAL		
		JK4701	K1FY119E0085	CONNECTOR		
		JK4702	K1FY119E0085	CONNECTOR		
		JK4703	K1FY119E0085	CONNECTOR		
		JK6951	K1ZZ00001558	TUNER SHIELD		
		JK8600	K2LC1YYE0005	JACK TERMINAL		
		JK8702	K1FY104B0095	AV TERMINAL		
		JK8703	K1FY109B0047	AV TERMINAL		
		JK8705	K1FY105E0025	CONNECTOR		
		JS2000	D0GAR00JA039	M 0 OHM, 1/16W		
		K10	K1KY07AA1311	CONNECTOR		
		L2200	J0JYC0000464	BEAD CORE		
		L3801	G1C220MA0426	COIL		
		L3802	G1C220MA0426	COIL		
		L3803	G1C220MA0426	COIL		
		L3804	G1C220MA0426	COIL		
		L5200	G1C2R2ZA0240	COIL		
		L5240	G1C6R8MA0426	COIL		
		L5260	G1C4R7MA0858	INDUCTOR		
		L6701	J0JYC0000464	BEAD CORE		
		L6703	J0JYC0000464	BEAD CORE		
		L6951	G1CR27JA0097	COIL		
		L6952	G1CR27JA0097	COIL		
		L6953	J0JYC0000464	BEAD CORE		
		L6954	G1CR27JA0097	COIL		
		L6955	J0JYC0000464	BEAD CORE		
		L6956	G1CR27JA0097	COIL		
		L6959	G1CR27JA0097	COIL		
		L6961	G1C82NJ00010	COIL		
		L6962	G1CR47J00012	BEAD COIL		
		L6963	G1CR22JA0097	COIL		
		L6964	G1CR22JA0097	COIL		
		L6965	G1C10NJ00008	BEAD COIL		
		L7203	J0JYA0000035	BEAD CORE		
		L7205	J0JYA0000035	BEAD CORE		
		L7210	J0JYA0000035	BEAD CORE		
		L7401	G0C6R8MA0094	CHOKE COIL		
		L7404	J0JYA0000035	BEAD CORE		
		L7802	J0JYA0000035	BEAD CORE		
		L7803	J0JYA0000035	BEAD CORE		
		L7815	G0C121K00016	INDUCTOR		
		L7816	G0C121K00016	INDUCTOR		
		L8100	G1C1R0MA0858	INDUCTOR		
		L8101	G1C2R2ZA0476	INDUCTOR		
		L8702	J0JYC0000464	BEAD CORE		
		L8703	J0JYC0000464	BEAD CORE		
		L8706	J0JYC0000464	BEAD CORE		
		L8920	J0JYC0000464	BEAD CORE		
		L8921	J0JYC0000464	BEAD CORE		
		LF7103	G0B183G00011	LINE FILTER		
		LF7104	G0B183G00011	LINE FILTER		
		LF7105	G0B8R0J00001	CHOKE COIL		

Model No. : TH-55DX650R Parts List

Change	Safety	Ref. No.	Part No.	Part Name & Description	Q'ty	Remarks
	⚠	P1	K2AAYA000005	AC INLET		
		P2	K1KY20BA0491	CONNECTOR		
		P5	K1KY09BA0385	CONNECTOR		
		P6	K1KY08BA0385	CONNECTOR		
		PA7406	ERBRE1R00V	FUSE		
	⚠	PC7301	B3PAA0000704	PHOTO COUPLERS		
	⚠	PC7302	B3PAA0000704	PHOTO COUPLERS		
	⚠	PC7303	B3PAA0000707	PHOTO COUPLER		
		Q2200	B1ABCF000231	TRANSISTOR		
		Q2201	B1ABCF000231	TRANSISTOR		
		Q4501	B1ABCF000231	TRANSISTOR		
		Q4502	B1ABCF000231	TRANSISTOR		
		Q4504	B1ABCF000231	TRANSISTOR		
		Q5140	B1ABCE000015	TRANSISTOR		
		Q5141	B1ABCE000015	TRANSISTOR		
		Q5143	B1ABCF000231	TRANSISTOR		
		Q5144	B1ABCF000231	TRANSISTOR		
		Q7202	B1ADGE000012	TRANSISTOR		
		Q7203	B1CERR000144	TRANSISTOR		
		Q7204	B1ADGE000012	TRANSISTOR		
		Q7301	B1CERR000144	TRANSISTOR		
		Q7302	B1CERR000144	TRANSISTOR		
		Q7315	B1ABCF000231	TRANSISTOR		
		Q7401	B1CFHD000029	TRANSISTOR		
		Q7402	B1CHRL000025	TRANSISTOR		
		Q7403	B1CHRE000034	TRANSISTOR		
		Q7404	B1CHRL000025	TRANSISTOR		
		Q7405	B1CHRE000034	TRANSISTOR		
		Q7408	B1CFHD000029	TRANSISTOR		
		Q7414	B1CFHD000029	TRANSISTOR		
		Q7416	B1ADCE000022	TRANSISTOR		
		Q7417	B1ABCN000007	TRANSISTOR		
		Q7800	B1CBHG000002	TRANSISTOR		
		Q7801	B1CERR000144	TRANSISTOR		
		Q7802	B1CFRN000003	TRANSISTOR		
		Q7803	B1CFRN000003	TRANSISTOR		
		Q7804	B1CERR000144	TRANSISTOR		
		Q7806	B1ABCN000007	TRANSISTOR		
		Q7807	B1CBHG000002	TRANSISTOR		
		Q7813	B1CFJD000007	TRANSISTOR		
		R0071	D0GAR00JA039	M 0 OHM, 1/16W		
		R0075	D0GAR00JA039	M 0 OHM, 1/16W		
		R0904	D0GA220JA039	M 22 OHM, J, 1/16W		
		R0905	D0GA220JA039	M 22 OHM, J, 1/16W		
		R0906	D0GA272JA039	M 2.7K OHM, J, 1/16W		
		R0907	D0GA272JA039	M 2.7K OHM, J, 1/16W		
		R0912	D0GA330JA039	M 33 OHM, J, 1/16W		
		R0913	D0GA330JA039	M 33 OHM, J, 1/16W		
		R0914	D0GA332JA039	M 3.3K OHM, J, 1/16W		
		R0915	D0GA332JA039	M 3.3K OHM, J, 1/16W		
		R0916	D0GA332JA039	M 3.3K OHM, J, 1/16W		
		R0917	D0GA332JA039	M 3.3K OHM, J, 1/16W		
		R0918	D0GA332JA039	M 3.3K OHM, J, 1/16W		
		R0919	D0GA332JA039	M 3.3K OHM, J, 1/16W		
		R0920	D0GA330JA039	M 33 OHM, J, 1/16W		
		R0921	D0GA330JA039	M 33 OHM, J, 1/16W		
		R0924	D0GA330JA039	M 33 OHM, J, 1/16W		
		R0930	D0GA330JA039	M 33 OHM, J, 1/16W		
		R0931	D0GA330JA039	M 33 OHM, J, 1/16W		
		R0934	D0GA153JA039	M 15K OHM, J, 1/16W		
		R0938	D0GAR00JA039	M 0 OHM, 1/16W		

Model No. : TH-55DX650R Parts List

Change	Safety	Ref. No.	Part No.	Part Name & Description	Q'ty	Remarks
		R0939	D0GAR00JA039	M 0 OHM, 1/16W		
		R0940	D0GA473JA039	M 47K OHM, J, 1/16W		
		R0941	D0GA473JA039	M 47K OHM, J, 1/16W		
		R0942	D0GAR00JA039	M 0 OHM, 1/16W		
		R0943	D0GAR00JA039	M 0 OHM, 1/16W		
		R0950	D0GAR00JA039	M 0 OHM, 1/16W		
		R2001	D0GA102JA039	M 1K OHM, J, 1/16W		
		R2002	D0GA103JA039	M 10K OHM, J, 1/16W		
		R2004	D0GA102JA039	M 1K OHM, J, 1/16W		
		R2009	D0GA680JA039	M 68 OHM, J, 1/16W		
		R2011	D0GA102JA039	M 1K OHM, J, 1/16W		
		R2014	D0GA103JA039	M 10K OHM, J, 1/16W		
		R2016	D0GA680JA039	M 68 OHM, J, 1/16W		
		R2019	D0GA680JA039	M 68 OHM, J, 1/16W		
		R2020	D0GA680JA039	M 68 OHM, J, 1/16W		
		R2021	D0GA680JA039	M 68 OHM, J, 1/16W		
		R2022	D0GA680JA039	M 68 OHM, J, 1/16W		
		R2035	D0GA223JA039	M 22K OHM, J, 1/16W		
		R2036	D1BA7151A023	M 7.15K OHM, F, 1/16 W		
		R2037	D1BA3092A023	M 30.9K OHM, F, 1/16W		
		R2086	D0GAR00JA039	M 0 OHM, 1/16W		
		R2252	D0GA102JA039	M 1K OHM, J, 1/16W		
		R2254	D0GA102JA039	M 1K OHM, J, 1/16W		
		R2260	D0GA103JA039	M 10K OHM, J, 1/16W		
		R2261	D0GA473JA039	M 47K OHM, J, 1/16W		
		R2262	D0GAR00JA039	M 0 OHM, 1/16W		
		R2263	D0GA223JA039	M 22K OHM, J, 1/16W		
		R2264	D0GA473JA039	M 47K OHM, J, 1/16W		
		R2265	D0GAR00JA039	M 0 OHM, 1/16W		
		R2301	D0GA473JA039	M 47K OHM, J, 1/16W		
		R2302	D0GA333JA039	M 33K OHM, J, 1/16W		
		R2801	D0GBR00J0004	M 0 OHM, J, 1/10W		
		R2808	D0GBR00J0004	M 0 OHM, J, 1/10W		
		R2820	D0GB470JA065	M 47 OHM, J, 1/10W		
		R2821	D0GB303JA065	M 30K OHM, J, 1/10W		
		R2822	D0GD104JA052	M 100K OHM, J, 1/8W		
		R2823	D1BB4301A073	M 4.3K OHM, J, 1/10W		
		R2824	D1BB1001A073	M 1K OHM, J, 1/10W		
		R2852	D1BD1911A066	M 1.91K OHM, F, 1/8W		
		R2853	D1BD3091A066	M 3.09K OHM, F, 1/8W		
		R2854	D1BD6041A066	M 6.04K OHM, F, 1/8W		
		R2855	D1BD1692A066	M 16.9K OHM, F, 1/8W		
		R3101	D0GAR00JA039	M 0 OHM, 1/16W		
		R3162	D0GAR00JA039	M 0 OHM, 1/16W		
		R3163	D0GAR00JA039	M 0 OHM, 1/16W		
		R3164	D0GAR00JA039	M 0 OHM, 1/16W		
		R3166	D0GA100JA039	M 10 OHM, J, 1/16W		
		R3167	D1BD75R0A066	M 75 OHM, F, 1/8W		
		R3168	D1BD75R0A066	M 75 OHM, F, 1/8W		
		R3169	D1BD75R0A066	M 75 OHM, F, 1/8W		
		R3170	D1H81014A042	M 100 OHM, J, 1/16W		
		R3174	D0GA473JA039	M 47K OHM, J, 1/16W		
		R3178	D0GA473JA039	M 47K OHM, J, 1/16W		
		R3188	D0GA333JA039	M 33K OHM, J, 1/16W		
		R3189	D0GA333JA039	M 33K OHM, J, 1/16W		
		R3191	D0GA473JA039	M 47K OHM, J, 1/16W		
		R3194	D0GAR00JA039	M 0 OHM, 1/16W		
		R3196	D0GA101JA039	M 100 OHM, J, 1/16W		
		R3200	D0GA101JA039	M 100 OHM, J, 1/16W		
		R3802	D0GDR00J0004	M 0 OHM, J, 1/8W		
		R3804	D0GA102JA039	M 1K OHM, J, 1/16W		

Model No. : TH-55DX650R Parts List

Change	Safety	Ref. No.	Part No.	Part Name & Description	Q'ty	Remarks
		R3805	D0GA103JA039	M 10K OHM, J, 1/16W		
		R3806	D0GA103JA039	M 10K OHM, J, 1/16W		
		R3807	D0GA102JA039	M 1K OHM, J, 1/16W		
		R3808	D0GA473JA039	M 47K OHM, J, 1/16W		
		R3809	D0GA102JA039	M 1K OHM, J, 1/16W		
		R3810	D1H86804A042	M 68 OHM, J, 1/16W		
		R3811	D0GA473JA039	M 47K OHM, J, 1/16W		
		R3812	D0GA473JA039	M 47K OHM, J, 1/16W		
		R3813	D0GA473JA039	M 47K OHM, J, 1/16W		
		R3814	D0GA473JA039	M 47K OHM, J, 1/16W		
		R3828	D0GA102JA039	M 1K OHM, J, 1/16W		
		R4046	D0GAR00JA039	M 0 OHM, 1/16W		
		R4047	D0GAR00JA039	M 0 OHM, 1/16W		
		R4050	D0GA103JA039	M 10K OHM, J, 1/16W		
		R4051	D0GA103JA039	M 10K OHM, J, 1/16W		
		R4082	D0GDR00J0004	M 0 OHM, J, 1/8W		
		R4100	D0GAR00JA039	M 0 OHM, 1/16W		
		R4101	D0GA102JA039	M 1K OHM, J, 1/16W		
		R4102	D0GAR00JA039	M 0 OHM, 1/16W		
		R4104	D0GAR00JA039	M 0 OHM, 1/16W		
		R4105	D0GDR00J0004	M 0 OHM, J, 1/8W		
		R4106	D0GAR00JA039	M 0 OHM, 1/16W		
		R4150	D1H4R0020006	RESISTOR		
		R4151	D1H4R0020006	RESISTOR		
		R4152	D1H4R0020006	RESISTOR		
		R4153	D1H4R0020006	RESISTOR		
		R4154	D1H4R0020006	RESISTOR		
		R4155	D1H4R0020006	RESISTOR		
		R4156	D1H4R0020006	RESISTOR		
		R4157	D1H4R0020006	RESISTOR		
		R4166	D0GAR00JA039	M 0 OHM, 1/16W		
		R4167	D0GAR00JA039	M 0 OHM, 1/16W		
		R4513	D0GA104JA039	M 100K OHM, J, 1/16W		
		R4514	D0GA103JA039	M 10K OHM, J, 1/16W		
		R4515	D0GA103JA039	M 10K OHM, J, 1/16W		
		R4516	D0GA473JA039	M 47K OHM, J, 1/16W		
		R4517	D0GA102JA039	M 1K OHM, J, 1/16W		
		R4519	D0GA104JA039	M 100K OHM, J, 1/16W		
		R4520	D0GA103JA039	M 10K OHM, J, 1/16W		
		R4521	D0GA103JA039	M 10K OHM, J, 1/16W		
		R4522	D0GA473JA039	M 47K OHM, J, 1/16W		
		R4523	D0GA102JA039	M 1K OHM, J, 1/16W		
		R4526	D0GA103JA039	M 10K OHM, J, 1/16W		
		R4528	D0GAR00JA039	M 0 OHM, 1/16W		
		R4532	D0GA220JA039	M 22 OHM, J, 1/16W		
		R4543	D0GA104JA039	M 100K OHM, J, 1/16W		
		R4544	D0GA103JA039	M 10K OHM, J, 1/16W		
		R4545	D0GA103JA039	M 10K OHM, J, 1/16W		
		R4546	D0GA473JA039	M 47K OHM, J, 1/16W		
		R4547	D0GA102JA039	M 1K OHM, J, 1/16W		
		R4550	D0GA473JA039	M 47K OHM, J, 1/16W		
		R4551	D0GA473JA039	M 47K OHM, J, 1/16W		
		R4553	D0GA473JA039	M 47K OHM, J, 1/16W		
		R4554	D0GA473JA039	M 47K OHM, J, 1/16W		
		R4556	D0GA473JA039	M 47K OHM, J, 1/16W		
		R4557	D0GA473JA039	M 47K OHM, J, 1/16W		
		R4561	D1BA1800A023	M 180 OHM, F, 1/16W		
		R4562	D1BA82R0A023	M 82 OHM, F, 1/16W		
		R4586	D0GA473JA039	M 47K OHM, J, 1/16W		
		R4587	D0GA473JA039	M 47K OHM, J, 1/16W		
		R4602	D0GA680JA039	M 68 OHM, J, 1/16W		

Model No. : TH-55DX650R Parts List

Change	Safety	Ref. No.	Part No.	Part Name & Description	Q'ty	Remarks
		R4603	D0GA680JA039	M 68 OHM, J, 1/16W		
		R4604	D0GA680JA039	M 68 OHM, J, 1/16W		
		R4605	D0GA680JA039	M 68 OHM, J, 1/16W		
		R4606	D0GA680JA039	M 68 OHM, J, 1/16W		
		R4607	D0GA680JA039	M 68 OHM, J, 1/16W		
		R4610	D0GA473JA039	M 47K OHM, J, 1/16W		
		R4612	D0GAR00JA039	M 0 OHM, 1/16W		
		R4617	D1BA4701A023	M 4.7K OHM, F, 1/16W		
		R4618	D1BA1502A023	M 15K OHM, F, 1/16 W		
		R4628	D0GA472JA039	M 4.7K OHM, J, 1/16W		
		R4629	D0GA472JA039	M 4.7K OHM, J, 1/16W		
		R4630	D0GA472JA039	M 4.7K OHM, J, 1/16W		
		R4671	D0GAR00JA039	M 0 OHM, 1/16W		
		R5008	D0GA683JA039	M 68K OHM, J, 1/16W		
		R5009	D0GA103JA039	M 10K OHM, J, 1/16W		
		R5017	D0GA473JA039	M 47K OHM, J, 1/16W		
		R5022	D0GA153JA039	M 15K OHM, J, 1/16W		
		R5023	D1BA5602A023	M 56K OHM, F, 1/16W		
		R5036	D1BA2202A023	M 22K OHM, F, 1/16W		
		R5037	D0GA103JA039	M 10K OHM, J, 1/16W		
		R5039	D0GA473JA039	M 47K OHM, J, 1/16W		
		R5040	D0GA103JA039	M 10K OHM, J, 1/16W		
		R5042	D0GA473JA039	M 47K OHM, J, 1/16W		
		R5080	D0GBR00J0004	M 0 OHM, J, 1/10W		
		R5098	D0GA103JA039	M 10K OHM, J, 1/16W		
		R5109	D0GB101JA065	M 100 OHM, J, 1/10W		
		R5110	D0GA681JA039	M 680 OHM, J, 1/16W		
		R5140	D0GA102JA039	M 1K OHM, J, 1/16W		
		R5141	D0GA154JA039	M 150K OHM, J, 1/16W		
		R5142	D0GA333JA039	M 33K OHM, J, 1/16W		
		R5144	D0GA473JA039	M 47K OHM, J, 1/16W		
		R5146	D0GA102JA039	M 1K OHM, J, 1/16W		
		R5147	D0GA101JA039	M 100 OHM, J, 1/16W		
		R5148	D0GA103JA039	M 10K OHM, J, 1/16W		
		R5149	D0GA103JA039	M 10K OHM, J, 1/16W		
		R5151	D0GAR00JA039	M 0 OHM, 1/16W		
		R5154	D1BA9101A023	M 9.1K OHM, F, 1/16 W		
		R5155	D1BA1242A023	M 12.4K OHM, F, 1/16W		
		R5156	D0GA472JA039	M 4.7K OHM, J, 1/16W		
		R5158	D0GA153JA039	M 15K OHM, J, 1/16W		
		R5160	D0GA473JA039	M 47K OHM, J, 1/16W		
		R5161	D0GA153JA039	M 15K OHM, J, 1/16W		
		R5201	D1BA1201A023	M 1.2K OHM, F, 1/16W		
		R5202	D1BA4021A023	M 4.02K OHM, F, 1/16W		
		R5203	D0GA220JA039	M 22 OHM, J, 1/16W		
		R5241	D1BB8201A074	M 8.2K OHM, D, 1/10 W		
		R5242	D1BB1541A074	M 1.54K OHM, D, 1/10 W		
		R5243	D0GA220JA039	M 22 OHM, J, 1/16W		
		R5245	D1BA3302A023	M 33K OHM, F, 1/16W		
		R5260	D0GAR00JA039	M 0 OHM, 1/16W		
		R5265	D0GA102JA039	M 1K OHM, J, 1/16W		
		R5267	D0GA104JA039	M 100K OHM, J, 1/16W		
		R5269	D1BB4642A073	M 46.4K OHM, F, 1/10W		
		R5270	D1BB2431A106	M 24.3K OHM, D, 1/10 W		
		R5271	D1BA3002A023	M 30K OHM, F, 1/16W		
		R5272	D0GBR00J0004	M 0 OHM, J, 1/10W		
		R5273	D0GA220JA039	M 22 OHM, J, 1/16W		
		R5274	D0GA104JA039	M 100K OHM, J, 1/16W		
		R5731	D1BA1200A023	M 120 OHM, F, 1/16W		
		R5732	D1BA56R0A023	M 56 OHM, F, 1/16W		
		R5904	D0GA473JA039	M 47K OHM, J, 1/16W		

Model No. : TH-55DX650R Parts List

Change	Safety	Ref. No.	Part No.	Part Name & Description	Q'ty	Remarks
		R5946	D0GA103JA039	M 10K OHM, J, 1/16W		
		R6412	D0GA473JA039	M 47K OHM, J, 1/16W		
		R6700	D0GA221JA039	M 220 OHM, J, 1/16W		
		R6701	D0GA221JA039	M 220 OHM, J, 1/16W		
		R6724	D0GA103JA039	M 10K OHM, J, 1/16W		
		R6758	D0GAR00JA039	M 0 OHM, 1/16W		
		R6770	D0GA220JA039	M 22 OHM, J, 1/16W		
		R6771	D0GA220JA039	M 22 OHM, J, 1/16W		
		R6786	D0GAR00JA039	M 0 OHM, 1/16W		
		R6787	D0GAR00JA039	M 0 OHM, 1/16W		
		R6793	D0GAR00JA039	M 0 OHM, 1/16W		
		R6794	D0GAR00JA039	M 0 OHM, 1/16W		
		R6950	D0GA101JA039	M 100 OHM, J, 1/16W		
		R6951	D0GA101JA039	M 100 OHM, J, 1/16W		
		R6953	D0GA101JA039	M 100 OHM, J, 1/16W		
		R6954	D0GA101JA039	M 100 OHM, J, 1/16W		
		R6955	D0GA102JA039	M 1K OHM, J, 1/16W		
		R6956	D0GA332JA039	M 3.3K OHM, J, 1/16W		
		R6959	D0GAR00JA039	M 0 OHM, 1/16W		
		R6960	D0GAR00JA039	M 0 OHM, 1/16W		
		R6962	D0GA102JA039	M 1K OHM, J, 1/16W		
		R6963	D0GA331JA039	M 330 OHM, J, 1/16W		
		R6966	D0GA681JA039	M 680 OHM, J, 1/16W		
		R6967	D0GA240JA039	M 24 OHM, J, 1/16W		
		R6968	D0GA681JA039	M 680 OHM, J, 1/16W		
		R7101	D0GF105JA048	M 1M OHM, J, 1/4W		
		R7102	D0GF105JA048	M 1M OHM, J, 1/4W		
		R7103	D0GF105JA048	M 1M OHM, J, 1/4W		
		R7104	D0GD102JA052	M 1K OHM, J, 1/8W		
		R7105	D0GD102JA052	M 1K OHM, J, 1/8W		
		R7201	ERX2SJR22V	M 0.22 OHM, J, 2W		
		R7203	D0GD104JA052	M 100K OHM, J, 1/8W		
		R7204	D0GF820JA047	M 82 OHM, J, 1/3W		
		R7205	D0GD101JA052	M 100 OHM, J, 1/8W		
		R7208	ERX2SJR22V	M 0.22 OHM, J, 2W		
		R7209	D0GD100JA052	M 10 OHM, J, 1/8W		
		R7211	D0GD223JA052	M 22K OHM, J, 1/8W		
		R7212	D0GB822JA065	M 8.2K OHM, J, 1/10W		
		R7214	D0GF225JA048	M 2.2M OHM, J, 1/4W		
		R7215	D0GF225JA048	M 2.2M OHM, J, 1/4W		
		R7216	D0GF225JA048	M 2.2M OHM, J, 1/4W		
		R7217	D0GF225JA048	M 2.2M OHM, J, 1/4W		
		R7218	D0GD124JA052	M 120K OHM, J, 1/8W		
		R7219	D0GB223JA065	M 22K OHM, J, 1/10W		
		R7220	D0GB223JA065	M 22K OHM, J, 1/10W		
		R7224	D1AB2704A023	M 2700K OHM, F, 1/4W		
		R7225	D1AB3004A023	M 3000K OHM, F, 1/4W		
		R7226	D1AB3004A023	M 3000K OHM, F, 1/4W		
		R7227	D1AB3004A023	M 3000K OHM, F, 1/4W		
		R7229	D0GD224JA052	M 220K OHM, J, 1/8W		
		R7230	D1BB3832A073	M 38.3K OHM, F, 1/10W		
		R7231	D1BB4702A073	M 4.7K OHM, F, 1/10W		
		R7232	D0GDR00J0004	M 0 OHM, J, 1/8W		
		R7237	D0GF4R7JA048	M 4.7 OHM, J, 1/4W		
		R7238	D0GD223JA052	M 22K OHM, J, 1/8W		
		R7239	D0GF820JA047	M 82 OHM, J, 1/3W		
		R7243	D0GF225JA048	M 2.2M OHM, J, 1/4W		
		R7301	D1BD3003A066	M 300K OHM, F, 1/8W		
		R7302	D0GF391JA047	M 39 OHM, J, 1/4W		
		R7303	D0GF391JA047	M 39 OHM, J, 1/4W		
		R7304	D0GF4R7JA048	M 4.7 OHM, J, 1/4W		

Model No. : TH-55DX650R Parts List

Change	Safety	Ref. No.	Part No.	Part Name & Description	Q'ty	Remarks
		R7305	D0GF430JA047	M 43 OHM, J, 1/4W		
		R7306	D0GD222JA052	M 2.2K OHM, J, 1/8W		
		R7307	D0GD562JA052	M 5.6K OHM, J, 1/8W		
		R7308	D0GD222JA052	M 2.2K OHM, J, 1/8W		
		R7309	D0GDR00J0004	M 0 OHM, J, 1/8W		
		R7310	D1BD3903A066	M 390K OHM, F, 1/8W		
	⚠	R7311	D0B1106JA033	M 10M OHM, J, 1W		
		R7312	D0GDR00J0004	M 0 OHM, J, 1/8W		
		R7315	D0GD222JA052	M 2.2K OHM, J, 1/8W		
		R7321	D0GF220JA048	M 22 OHM, J, 1/4W		
		R7322	D0GF220JA048	M 22 OHM, J, 1/4W		
		R7323	D0GD223JA052	M 22K OHM, J, 1/8W		
		R7324	D0GD223JA052	M 22K OHM, J, 1/8W		
		R7327	D0GF101JA048	M 100 OHM, J, 1/4W		
		R7351	D0GDR00J0004	M 0 OHM, J, 1/8W		
		R7353	D0GD101JA052	M 100 OHM, J, 1/8W		
		R7380	D0GD224JA052	M 220K OHM, J, 1/8W		
		R7381	D0GD473JA052	M 47K OHM, J, 1/8W		
		R7387	D0GF4R7JA048	M 4.7 OHM, J, 1/4W		
		R7397	D1BD1802A066	M 18K OHM, F, 1/8W		
		R7398	D1BD2201A066	M 220 OHM, F, 1/8W		
		R7399	D0GF430JA047	M 43 OHM, J, 1/4W		
		R7401	D0GB472JA065	M 4.7K OHM, J, 1/10W		
		R7402	D0GB103JA065	M 10K OHM, J, 1/10W		
		R7403	D0GD473JA052	M 47K OHM, J, 1/8W		
		R7404	D0GD474JA052	M 470K OHM, J, 1/8W		
		R7405	D0GD561JA052	M 560 OHM, J, 1/8W		
		R7406	D1BB3301A073	M 3.3KOHM, F, 1/10W		
		R7407	D0GB103JA065	M 10K OHM, J, 1/10W		
		R7408	D1BD1802A066	M 18K OHM, F, 1/8W		
		R7409	D0GD333JA052	M 33K OHM, J, 1/8W		
		R7410	D0GB153JA065	M 15K OHM, J, 1/10W		
		R7411	D0GD104JA052	M 100K OHM, J, 1/8W		
		R7412	D0GB153JA065	M 15K OHM, J, 1/10W		
		R7413	D1BD2700A066	M 270 OHM, F, 1/8W		
		R7416	D0GD333JA052	M 33K OHM, J, 1/8W		
		R7418	D0GD105JA052	M 1M OHM, J, 1/8W		
		R7420	D0GDR00J0004	M 0 OHM, J, 1/8W		
		R7421	D0GD104JA052	M 100K OHM, J, 1/8W		
		R7424	D0GD473JA052	M 47K OHM, J, 1/8W		
		R7425	D0GF1R0JA047	M 1.0 OHM, J, 1/4W		
		R7426	D0GB472JA065	M 4.7K OHM, J, 1/10W		
		R7427	D0GF1R0JA047	M 1.0 OHM, J, 1/4W		
		R7432	D0GD100JA052	M 10 OHM, J, 1/8W		
		R7433	D0GD104JA052	M 100K OHM, J, 1/8W		
		R7434	D0GD223JA052	M 22K OHM, J, 1/8W		
		R7435	D0GD473JA052	M 47K OHM, J, 1/8W		
		R7436	D0GD104JA052	M 100K OHM, J, 1/8W		
		R7437	D0GD473JA052	M 47K OHM, J, 1/8W		
		R7441	D0GD474JA052	M 470K OHM, J, 1/8W		
		R7442	D0GD102JA052	M 1K OHM, J, 1/8W		
		R7445	D0GD104JA052	M 100K OHM, J, 1/8W		
		R7446	D0GD104JA052	M 100K OHM, J, 1/8W		
		R7452	D0GB153JA065	M 15K OHM, J, 1/10W		
		R7453	D0GB153JA065	M 15K OHM, J, 1/10W		
		R7454	D0GB100JA065	M 10 OHM, J, 1/10W		
		R7457	D0GD102JA052	M 1K OHM, J, 1/8W		
		R7466	D0GD474JA052	M 470K OHM, J, 1/8W		
		R7476	D0GZ6R8JA020	M 6.8 OHM, J, 1/2W		
		R7477	D0GZ6R8JA020	M 6.8 OHM, J, 1/2W		
		R7486	D1BB2003A073	M 200K OHM, F, 1/10W		

Model No. : TH-55DX650R Parts List

Change	Safety	Ref. No.	Part No.	Part Name & Description	Q'ty	Remarks
		R7487	D1BB3602A073	M 36K OHM, F, 1/10W		
		R7492	D0GD243JA052	M 24K OHM, J, 1/8W		
		R7495	D0GB100JA065	M 10 OHM, J, 1/10W		
		R7801	ERG2SJ103V	M 10K OHM, J, 2W		
		R7803	D0GB470JA065	M 47 OHM, J, 1/10W		
		R7804	D0GB470JA065	M 47 OHM, J, 1/10W		
		R7805	D1BD6492A066	M 64.9K OHM, F, 1/8W		
		R7806	D1BD7501A066	M 7.5K OHM, F, 1/8W		
		R7807	D1BD2552A066	M 25.5K OHM, F, 1/8W		
		R7808	D0GD104JA052	M 100K OHM, J, 1/8W		
		R7809	D1BD1003A066	M 100K OHM, F, 1/8W		
		R7810	D1BD1003A066	M 100K OHM, F, 1/8W		
		R7814	D0GD104JA052	M 100K OHM, J, 1/8W		
		R7816	D1BD1503A066	M 150K OHM, F, 1/8W		
		R7818	D1BD1501A066	M 1.5K OHM, F, 1/10W		
		R7820	D0GD470JA059	M 47 OHM, J, 1/4W		
		R7821	D0GD101JA052	M 100 OHM, J, 1/8W		
		R7823	D0GD152JA052	M 1.5K OHM, J, 1/8W		
		R7824	D1BF12R4A073	M 12.4 OHM, F, 1/16W		
		R7825	D1BF12R4A073	M 12.4 OHM, F, 1/16W		
		R7826	D1BF12R4A073	M 12.4 OHM, F, 1/16W		
		R7827	D0GD100JA052	M 10 OHM, J, 1/8W		
		R7829	D1BF12R4A073	M 12.4 OHM, F, 1/16W		
		R7831	D0GFR22JA020	M 0.22 OHM, J, 1/4W		
		R7832	D0GD470JA059	M 47 OHM, J, 1/4W		
		R7833	D0GB470JA065	M 47 OHM, J, 1/10W		
		R7834	D0GD101JA052	M 100 OHM, J, 1/8W		
		R7836	D0GD100JA059	M 10 OHM, J, 1/4W		
		R7837	D0GD473JA052	M 47K OHM, J, 1/8W		
		R7838	D0GFR22JA020	M 0.22 OHM, J, 1/4W		
		R7839	D0GFR22JA020	M 0.22 OHM, J, 1/4W		
		R7840	ERG2SJ562V	M 5.6K OHM, J, 2W		
		R7842	D0GFR22JA020	M 0.22 OHM, J, 1/4W		
		R7843	D0GD100JA059	M 10 OHM, J, 1/4W		
		R7844	D0GD473JA052	M 47K OHM, J, 1/8W		
		R7845	D0GFR22JA020	M 0.22 OHM, J, 1/4W		
		R7846	D0GFR22JA020	M 0.22 OHM, J, 1/4W		
		R7849	D1BD4703A066	M 470K OHM, F, 1/8W		
		R7851	D1BF12R4A073	M 12.4 OHM, F, 1/16W		
		R7852	D1BF12R4A073	M 12.4 OHM, F, 1/16W		
		R7853	D1BF12R4A073	M 12.4 OHM, F, 1/16W		
		R7854	D1BF12R4A073	M 12.4 OHM, F, 1/16W		
		R7856	D1BD4703A066	M 470K OHM, F, 1/8W		
		R7862	D1BD1003A066	M 100K OHM, F, 1/8W		
		R7863	D1BD1501A066	M 1.5K OHM, F, 1/10W		
		R7866	D1BD4703A066	M 470K OHM, F, 1/8W		
		R7867	D1BD4703A066	M 470K OHM, F, 1/8W		
		R7868	D0GD102JA052	M 1K OHM, J, 1/8W		
		R7870	D0GD152JA052	M 1.5K OHM, J, 1/8W		
		R7871	ERG2SJ562V	M 5.6K OHM, J, 2W		
		R7873	D0GDR00J0004	M 0 OHM, J, 1/8W		
		R7874	D0GD333JA052	M 33K OHM, J, 1/8W		
		R7882	D1BD6492A066	M 64.9K OHM, F, 1/8W		
		R7883	D0GB104JA065	M 100K OHM, J, 1/10W		
		R7884	D1BD2202A066	M 22K OHM, D, 1/10 W		
		R7890	D0GDR00J0004	M 0 OHM, J, 1/8W		
		R7899	D0GD101JA052	M 100 OHM, J, 1/8W		
		R7901	D0GD222JA052	M 2.2K OHM, J, 1/8W		
		R7902	D0GB102JA065	M 1K OHM, J, 1/10W		
		R7905	D0GD222JA052	M 2.2K OHM, J, 1/8W		
		R7906	D0GB102JA065	M 1K OHM, J, 1/10W		

Model No. : TH-55DX650R Parts List

Change	Safety	Ref. No.	Part No.	Part Name & Description	Q'ty	Remarks
		R7908	ERG2SJ103V	M 10K OHM, J, 2W		
		R7909	ERG2SJ103V	M 10K OHM, J, 2W		
		R7910	ERG2SJ103V	M 10K OHM, J, 2W		
		R8007	D0GAR00JA039	M 0 OHM, 1/16W		
		R8008	D0GA272JA039	M 2.7K OHM, J, 1/16W		
		R8101	D0GAR00JA039	M 0 OHM, 1/16W		
		R8103	D1BA1802A023	M 18K OHM, F, 1/16W		
		R8104	D1BA1242A023	M 12.4K OHM, F, 1/16W		
		R8105	D0GAR00JA039	M 0 OHM, 1/16W		
		R8107	D0GBR00J0004	M 0 OHM, J, 1/10W		
		R8109	D1BA1002A023	M 10K OHM, F, 1/16W		
		R8110	D1BA1502A023	M 15K OHM, F, 1/16 W		
		R8111	D1BA3241A023	M 3.24K OHM, F, 1/16W		
		R8112	D1BA1002A023	M 10K OHM, F, 1/16W		
		R8117	D0GA473JA039	M 47K OHM, J, 1/16W		
		R8119	D0GA103JA039	M 10K OHM, J, 1/16W		
		R8122	D0GAR00JA039	M 0 OHM, 1/16W		
		R8200	D1BA47R0A023	M 47 OHM, F, 1/16W		
		R8201	D1BA47R0A023	M 47 OHM, F, 1/16W		
		R8203	D0GA470JA039	M 47 OHM, J, 1/16W		
		R8204	D0GA470JA039	M 47 OHM, J, 1/16W		
		R8205	D0GA101JA039	M 100 OHM, J, 1/16W		
		R8206	D1BA1001A023	M 1K OHM, F, 1/16 W		
		R8207	D1BA1001A023	M 1K OHM, F, 1/16 W		
		R8208	D1BA1001A023	M 1K OHM, F, 1/16 W		
		R8209	D1BA1001A023	M 1K OHM, F, 1/16 W		
		R8212	D1BA2400A023	M 240 OHM, F, 1/16W		
		R8213	D1BA2400A023	M 240 OHM, F, 1/16W		
		R8214	D1BA47R0A023	M 47 OHM, F, 1/16W		
		R8215	D1BA47R0A023	M 47 OHM, F, 1/16W		
		R8217	D0GA470JA039	M 47 OHM, J, 1/16W		
		R8218	D0GA470JA039	M 47 OHM, J, 1/16W		
		R8219	D0GA101JA039	M 100 OHM, J, 1/16W		
		R8220	D1BA1001A023	M 1K OHM, F, 1/16 W		
		R8221	D1BA1001A023	M 1K OHM, F, 1/16 W		
		R8222	D1BA1001A023	M 1K OHM, F, 1/16 W		
		R8223	D1BA1001A023	M 1K OHM, F, 1/16 W		
		R8226	D1BA2400A023	M 240 OHM, F, 1/16W		
		R8227	D1BA2400A023	M 240 OHM, F, 1/16W		
		R8228	D1BA47R0A023	M 47 OHM, F, 1/16W		
		R8229	D1BA47R0A023	M 47 OHM, F, 1/16W		
		R8231	D0GA470JA039	M 47 OHM, J, 1/16W		
		R8232	D0GA470JA039	M 47 OHM, J, 1/16W		
		R8233	D0GA101JA039	M 100 OHM, J, 1/16W		
		R8234	D1BA1001A023	M 1K OHM, F, 1/16 W		
		R8235	D1BA1001A023	M 1K OHM, F, 1/16 W		
		R8237	D1BA2400A023	M 240 OHM, F, 1/16W		
		R8300	D0GA101JA039	M 100 OHM, J, 1/16W		
		R8601	D1BA2402A023	M 24K OHM, F, 1/16W		
		R8602	D1BA75R0A023	M 75.0 OHM, F, 1/16 W		
		R8603	D1BA75R0A023	M 75.0 OHM, F, 1/16 W		
		R8604	D1BA75R0A023	M 75.0 OHM, F, 1/16 W		
		R8605	D1BA75R0A023	M 75.0 OHM, F, 1/16 W		
		R8606	D0GA473JA039	M 47K OHM, J, 1/16W		
		R8636	D0GA103JA039	M 10K OHM, J, 1/16W		
		R8640	D0GA103JA039	M 10K OHM, J, 1/16W		
		R8641	D0GA103JA039	M 10K OHM, J, 1/16W		
		R8643	D1H81034A042	M 10K OHM, J, 1/16W		
		R8648	D0GA103JA039	M 10K OHM, J, 1/16W		
		R8710	D0GA103JA039	M 10K OHM, J, 1/16W		
		R8713	D0GA103JA039	M 10K OHM, J, 1/16W		

Model No. : TH-55DX650R Parts List

Change	Safety	Ref. No.	Part No.	Part Name & Description	Q'ty	Remarks
		R8714	D1BA2872A023	M 28.7K OHM, F, 1/16W		
		R8715	D0GA272JA039	M 2.7K OHM, J, 1/16W		
		R8717	D0GA103JA039	M 10K OHM, J, 1/16W		
		R8718	D0GA103JA039	M 10K OHM, J, 1/16W		
		R8719	D1H8R0040016	M 0 OHM, Z, 1/16W		
		R8720	D1H8R0040016	M 0 OHM, Z, 1/16W		
		R8721	D1BA1652A023	M 16.5K OHM, F, 1/16W		
		R8723	D0GA272JA039	M 2.7K OHM, J, 1/16W		
		R8726	D0GA103JA039	M 10K OHM, J, 1/16W		
		R8727	D0GA103JA039	M 10K OHM, J, 1/16W		
		R8728	D0GAR00JA039	M 0 OHM, 1/16W		
		R8729	D0GAR00JA039	M 0 OHM, 1/16W		
		R8730	D0GAR00JA039	M 0 OHM, 1/16W		
		R8732	D0GA103JA039	M 10K OHM, J, 1/16W		
		R8734	D0GA103JA039	M 10K OHM, J, 1/16W		
		R8735	D0GA103JA039	M 10K OHM, J, 1/16W		
		R8737	D0GA103JA039	M 10K OHM, J, 1/16W		
		R8738	D1BA5101A023	M 5.1K OHM, F, 1/16 W		
		R8739	D1BA5101A023	M 5.1K OHM, F, 1/16 W		
		R8756	D0GAR00JA039	M 0 OHM, 1/16W		
		R8757	D0GAR00JA039	M 0 OHM, 1/16W		
		R8759	D1BA3601A023	M 3.6K OHM, F, 1/16W		
		R8760	D0GA103JA039	M 10K OHM, J, 1/16W		
		R8764	D0GA272JA039	M 2.7K OHM, J, 1/16W		
		R8765	D0GA680JA039	M 68 OHM, J, 1/16W		
		R8766	D0GA103JA039	M 10K OHM, J, 1/16W		
		R8809	D0GA472JA039	M 4.7K OHM, J, 1/16W		
		R8819	D0GA472JA039	M 4.7K OHM, J, 1/16W		
		R8822	D0GA472JA039	M 4.7K OHM, J, 1/16W		
		R8858	D0GA682JA039	M 6.8K OHM, J, 1/16W		
		R8868	D0GA472JA039	M 4.7K OHM, J, 1/16W		
		R8869	D0GA473JA039	M 47K OHM, J, 1/16W		
		R8870	D0GA473JA039	M 47K OHM, J, 1/16W		
		R8871	D0GA472JA039	M 4.7K OHM, J, 1/16W		
		R8872	D0GA103JA039	M 10K OHM, J, 1/16W		
		R8873	D0GA472JA039	M 4.7K OHM, J, 1/16W		
		R8909	D0GAR00JA039	M 0 OHM, 1/16W		
		R8911	D0GAR00JA039	M 0 OHM, 1/16W		
		R8920	D0GA680JA039	M 68 OHM, J, 1/16W		
		R8921	D0GA680JA039	M 68 OHM, J, 1/16W		
		R8922	D0GA680JA039	M 68 OHM, J, 1/16W		
		R8923	D0GA680JA039	M 68 OHM, J, 1/16W		
		R8924	D0GA680JA039	M 68 OHM, J, 1/16W		
		R8925	D0GA680JA039	M 68 OHM, J, 1/16W		
		R8926	D0GA680JA039	M 68 OHM, J, 1/16W		
		R8927	D0GA680JA039	M 68 OHM, J, 1/16W		
		R8928	D1H81034A042	M 10K OHM, J, 1/16W		
		R8929	D1H81034A042	M 10K OHM, J, 1/16W		
		R8930	D0GA680JA039	M 68 OHM, J, 1/16W		
		R8931	D0GA473JA039	M 47K OHM, J, 1/16W		
		R8932	D0GA680JA039	M 68 OHM, J, 1/16W		
		R8933	D1H8R0040016	M 0 OHM, Z, 1/16W		
		R8934	D1H8R0040016	M 0 OHM, Z, 1/16W		
		R8935	D0GA560JA039	M 56 OHM, J, 1/16W		
		R8936	D0GA473JA039	M 47K OHM, J, 1/16W		
		R8937	D0GAR00JA039	M 0 OHM, 1/16W		
		R8940	D0GA103JA039	M 10K OHM, J, 1/16W		
		R8941	D0GA473JA039	M 47K OHM, J, 1/16W		
		R8945	D0GA103JA039	M 10K OHM, J, 1/16W		
		R8946	D0GA103JA039	M 10K OHM, J, 1/16W		
		R8947	D0GA103JA039	M 10K OHM, J, 1/16W		

Model No. : TH-55DX650R Parts List

Change	Safety	Ref. No.	Part No.	Part Name & Description	Q'ty	Remarks
		R8948	D0GA103JA039	M 10K OHM, J, 1/16W		
		R8949	D0GA103JA039	M 10K OHM, J, 1/16W		
		R8950	D0GA473JA039	M 47K OHM, J, 1/16W		
		R8951	D0GA473JA039	M 47K OHM, J, 1/16W		
		RM2800	B3RBB0000018	PHOTO DETECTOR		
		SN2800	B3JB00000223	PHOTO DETECTOR		
		SW2851	EVQ11G05R	SWITCH		
		SW2852	EVQ11G05R	SWITCH		
		SW2853	EVQ11G05R	SWITCH		
		SW2854	EVQ11G05R	SWITCH		
		SW2855	EVQ11G05R	SWITCH		
		SW2857	EVQ11G05R	SWITCH		
	⚠	T7202	G4DYA0000496	TRANSFORMER		
	⚠	T7302	G4DYA0000779	TRANSFORMER		
		T8600	G5BYC0000040	TRANSFORMER		
		X6950	H0J240500106	CRYSTAL OSCILLATOR		
		X8301	H0J240500106	CRYSTAL OSCILLATOR		
		ZA0210	K4AD01D00012	TERMINAL		
		ZA0211	K4AD01D00012	TERMINAL		
		ZA0212	K4AD01D00012	TERMINAL		
		ZA0213	K4AD01D00012	TERMINAL		
		ZA0214	K4AD01D00012	TERMINAL		
		ZA0215	K4AD01D00012	TERMINAL		
		ZA0219	K4AD01D00012	TERMINAL		
		ZA0221	K4AD01D00012	TERMINAL		
		ZA0222	K4AD01D00012	TERMINAL		
		ZA0223	K4AD01D00012	TERMINAL		
		ZA0226	K4AD01D00012	TERMINAL		
		ZA0227	K4AD01D00012	TERMINAL		
		ZA0228	K4AD01D00012	TERMINAL		
		ZA0229	K4AD01D00012	TERMINAL		
		ZA0230	K4AD01D00012	TERMINAL		
		ZA0231	K4AD01D00012	TERMINAL		
		ZA0232	K4AD01D00012	TERMINAL		
		ZA0233	K4AD01D00012	TERMINAL		
		ZA0234	K4AD01D00012	TERMINAL		
		ZA0235	K4AD01D00012	TERMINAL		
		ZA0242	K4AD01D00012	TERMINAL		
		ZA0244	K4AD01D00012	TERMINAL		
		ZA0251	K4ZZ01000289	SHIELD CASE CLIP		
		ZA0252	K4ZZ01000289	SHIELD CASE CLIP		
		ZA0254	K4ZZ01000289	SHIELD CASE CLIP		
		ZA0255	K4ZZ01000289	SHIELD CASE CLIP		
		ZA0256	K4ZZ01000289	SHIELD CASE CLIP		
		ZA0257	K4ZZ01000289	SHIELD CASE CLIP		
		ZA0301	K4AD01D00012	TERMINAL		
		ZA0302	K4AD01D00012	TERMINAL		
		ZA0303	K4AD01D00012	TERMINAL		
		ZA0305	K4AD01D00012	TERMINAL		
		ZA0307	K4AD01D00012	TERMINAL		
		ZA0308	K4AD01D00012	TERMINAL		
		ZA0313	K4AD01D00012	TERMINAL		
		ZA0315	K4AD01D00012	TERMINAL		
		ZA0317	K4AD01D00012	TERMINAL		
		ZA0318	K4AD01D00012	TERMINAL		
		ZA0320	K4AD01D00012	TERMINAL		
		ZA0322	K4AD01D00012	TERMINAL		
		ZA0323	K4AD01D00012	TERMINAL		
		ZA0325	K4AD01D00012	TERMINAL		
		ZA0327	K4AD01D00012	TERMINAL		
		ZA0328	K4AD01D00012	TERMINAL		

Model No. : TH-55DX650R Parts List

Change	Safety	Ref. No.	Part No.	Part Name & Description	Q'ty	Remarks
		ZA0329	K4AD01D00012	TERMINAL		
		ZA0330	K4AD01D00012	TERMINAL		
		ZA0332	K4AD01D00012	TERMINAL		
		ZA0333	K4AD01D00012	TERMINAL		
		ZA0334	K4AD01D00012	TERMINAL		
		ZA0335	K4AD01D00012	TERMINAL		
		ZA0336	K4AD01D00012	TERMINAL		
		ZA0339	K4AD01D00012	TERMINAL		
		ZA0343	K4AD01D00012	TERMINAL		
		ZA0346	K4AD01D00012	TERMINAL		
		ZA0347	K4AD01D00012	TERMINAL		
		ZA0349	K4AD01D00012	TERMINAL		
		ZA0350	K4AD01D00012	TERMINAL		
		ZA337	K4AD01D00012	TERMINAL		
		ZA341	K4AD01D00012	TERMINAL		
		ZA342	K4AD01D00012	TERMINAL		
		ZA344	K4AD01D00012	TERMINAL		
		ZA345	K4AD01D00012	TERMINAL		
		ZA351	K4AD01D00012	TERMINAL		
		ZA352	K4AD01D00012	TERMINAL		
		ZA353	K4AD01D00012	TERMINAL		
		ZA354	K4AD01D00012	TERMINAL		
		ZA355	K4AD01D00012	TERMINAL		
		ZA356	K4AD01D00012	TERMINAL		
		ZA357	K4AD01D00012	TERMINAL		
		ZA358	K4AD01D00012	TERMINAL		
		ZA359	K4AD01D00012	TERMINAL		
		ZA360	K4AD01D00012	TERMINAL		
		ZA361	K4AD01D00012	TERMINAL		
		ZA362	K4AD01D00012	TERMINAL		
		ZA363	K4AD01D00012	TERMINAL		
		ZA364	K4AD01D00012	TERMINAL		
		ZA365	K4AD01D00012	TERMINAL		
		ZA366	K4AD01D00012	TERMINAL		
		ZA367	K4AD01D00012	TERMINAL		
		ZA368	K4AD01D00012	TERMINAL		
		ZA7101	K4AD01A00004	RUG TERMINAL		
		ZA7102	K4AD01A00004	RUG TERMINAL		
		ZA7103	K4AD01A00004	RUG TERMINAL		
		ZA7104	K4AD01A00004	RUG TERMINAL		
		ZA7105	K4AD01A00004	RUG TERMINAL		
		ZA7106	K4AD01A00004	RUG TERMINAL		
		ZA7107	K4AD01A00004	RUG TERMINAL		

Model No. : TH-55DX650R Parts List

Change	Safety	Ref. No.	Part No.	Part Name & Description	Q'ty	Remarks
		1	K1HY05YY0242	WIFI USB CABLE		
	⚠	2	K2CQ2YY00138	AC CORD		
		3	L0EYAA000086	SPEAKER		
		4	N2QAYB000934	REMOTE TRANSMITTER		
	⚠	5	N5HBZ0000120	WIFI_MODULE		
		6	TBL5ZX09041A	STAND_METAL KIT_ASSY		Kit Includes All Brackets and Screws
			TBM4GA004	PANASONIC BADGE		
	⚠	7	TBM4GD8108	MODEL NAME PLATE		Local Purchase (Shahab Factory)
		8	TBX5ZA03303A	KEY BUTTON BRACKET		
		9	TKK5ZC50583	LED_PANEL		
		10	TKP5ZA65302	SIDE_AV_BRACKET		
		11	TPC4GA46005	CARTON		Local Purchase (Shahab Factory)
		12	TPD4GA05181	CUSHION_FRONT		
		13	TPD4GA07861	CUSHION_TOP		
		14	TPD4GA07871	CUSHION_BOTTOM		
		15	TPE4GH064	SET_BAG		
	⚠	16	TQB4GC1641	OPERATING MANUAL (ENGLISH)		Local Purchase (Shahab Factory)
	⚠	16	TQB4GC1642	OPERATING MANUAL (ARABIC)		Local Purchase (Shahab Factory)
	⚠	16	TQB4GC1643	OPERATING MANUAL (PERSIAN)		Local Purchase (Shahab Factory)
		17	TSCKF1050030	LVDS_CABLE		
	⚠	18	TXN/K1WJUZ	K PRINT ASSEMBLY		
		19	TZBL4GX00501	PEDESTAL_ASSY		
	⚠	20	TZLP872DYVR	LCD_PANEL_ASSY		
			TZRLP72KFAQ	LCD_PANEL_PACKAGING		
	⚠	21	TZRNP11YSUH	P & GK PRINT ASSEMBLY		
	⚠	22	TZT/A1DYVR	A PRINT ASSEMBLY		
		23	TZTU4GA1860	BACK_COVER_COMPLETE		