ORDER NO. MTV1401268CE

Service Manual

LED TV

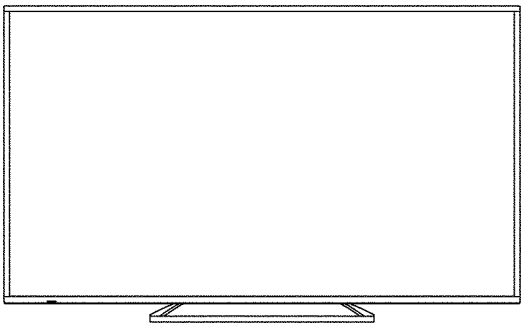

Model No. TH-48AX670S

Chassis: LA51

Destination: SINGAPORE

⚠ WARNING

This service information is designed for experienced repair technicians only and is not designed for use by the general public. It does not contain warnings or cautions to advise non-technical individuals of potential dangers in attempting to service a product. Products powered by electricity should be serviced or repaired only by experienced professional technicians. Any attempt to service or repair the product or products dealt with in this service information by anyone else could result in serious injury or death.

IMPORTANT SAFETY NOTICE

There are special components used in this equipment which are important for safety. These parts are marked by ⚠ in the Schematic Diagrams, Circuit Board Diagrams, Exploded Views and Replacement Parts List. It is essential that these critical parts should be replaced with manufacturer's specified parts to prevent shock, fire or other hazards. Do not modify the original design without permission of manufacturer.

TABLE OF CONTENTS

PAGE

1 Safety Precautions ---------- **3**
1.1. General Guidelines ---------- 3
1.1.1. Leakage Current Cold Check ---------- 3
1.1.2. Leakage Current Hot Check (See Figure 1.) ---------- 3
2 Warning ---------- **4**
2.1. Prevention of Electrostatic Discharge (ESD) to Electrostatically Sensitive (ES) Devices ---------- 4
2.2. About lead free solder (PbF) ---------- 5
3 Service Navigation ---------- **6**
3.1. Service Hint ---------- 6
4 Specifications ---------- **7**
5 Service Mode ---------- **9**
5.1. How to enter into Service Mode ---------- 9
5.1.1. Purpose ---------- 9
5.1.2. Key command ---------- 9
5.1.3. How to exit ---------- 9
5.1.4. Contents of adjustment mode ---------- 9
5.1.5. Display of SOS History ---------- 10
5.1.6. Exit ---------- 10
5.1.7. Hotel Mode ---------- 11
6 Troubleshooting Guide ---------- **12**
6.1. Check of the IIC bus lines ---------- 12
6.1.1. How to access ---------- 12
6.1.2. Self-check indication only ---------- 12
6.1.3. Self-check indication and forced to factory shipment setting ---------- 12
6.1.4. Exit ---------- 12
6.1.5. Screen display ---------- 12
6.2. Power LED Blinking timing chart ---------- 13
6.3. Method of detecting SOS ---------- 13
6.4. LCD Panel test mode ---------- 14
6.5. No Power ---------- 14
7 Disassembly and Assembly Instructions ---------- **15**
7.1. Speaker & H/Sink Ass'y ---------- 15
7.2. LCD Panel Fixing & Handling Method ---------- 16
7.3. Module & LED Panel Ass'y ---------- 17
7.4. PCB & AV Bracket Ass'y ---------- 18
7.5. Brackets Ass'y ---------- 19
7.6. Pedestal Ass'y ---------- 20

Panasonic®

© Panasonic Corporation 2014.

7.7. Back Cover Installation ---------- 21
8 Measurements and Adjustments ---------- 22
8.1. Voltage chart of A-board---------- 22
9 Block Diagram ---------- 23
9.1. Main Block Diagram ---------- 23
9.2. Detailed Block Diagram (1/3)---------- 24
9.3. Detailed Block Diagram (2/3)---------- 25
9.4. Detailed Block Diagram (3/3)---------- 26
10 Wiring Connection Diagram ---------- 27
10.1. Wire Dressing ---------- 27
11 Schematic Diagram---------- 28
12 Printed Circuit Board ---------- 55
13 Exploded View and Replacement Parts List ---------- 61

1 Safety Precautions

1.1. General Guidelines

1. When servicing, observe the original lead dress. If a short circuit is found, replace all parts which have been overheated or damaged by the short circuit.
2. After servicing, see to it that all the protective devices such as insulation barriers, insulation papers shields are properly installed.
3. After servicing, make the following leakage current checks to prevent the customer from being exposed to shock hazards.
4. When conducting repairs and servicing, do not attempt to modify the equipment, its parts or its materials.
5. When wiring units (with cables, flexible cables or lead wires) are supplied as repair parts and only one wire or some of the wires have been broken or disconnected, do not attempt to repair or re-wire the units. Replace the entire wiring unit instead.
6. When conducting repairs and servicing, do not twist the Faston connectors but plug them straight in or unplug them straight out.

1.1.1. Leakage Current Cold Check

1. Unplug the AC cord and connect a jumper between the two prongs on the plug.
2. Measure the resistance value, with an ohmmeter, between the jumpered AC plug and each exposed metallic cabinet part on the equipment such as screwheads, connectors, control shafts, etc. When the exposed metallic part has a return path to the chassis, the reading should be 8.5Mohm to 13Mohm.
   When the exposed metal does not have a return path to the chassis, the reading must be ∞.

1.1.2. Leakage Current Hot Check (See Figure 1.)

1. Plug the AC cord directly into the AC outlet. Do not use an isolation transformer for this check.
2. Connect a 1.5kohm, 10 watts resistor, in parallel with a 0.15μF capacitors, between each exposed metallic part on the set and a good earth ground such as a water pipe, as shown in Figure 1.
3. Use an AC voltmeter, with 1000 ohms/volt or more sensitivity, to measure the potential across the resistor.
4. Check each exposed metallic part, and measure the voltage at each point.
5. Reverse the AC plug in the AC outlet and repeat each of the above measurements.
6. The potential at any point should not exceed 0.75 volts RMS. A leakage current tester (Simpson Model 229 or equivalent) may be used to make the hot checks, leakage current must not exceed 1/2 milliamp. In case a measurement is outside of the limits specified, there is a possibility of a shock hazard, and the equipment should be repaired and rechecked before it is returned to the customer.

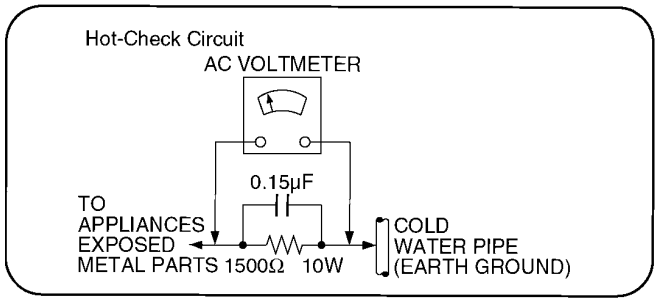

Figure 1

2 Warning

2.1. Prevention of Electrostatic Discharge (ESD) to Electrostatically Sensitive (ES) Devices

Some semiconductor (solid state) devices can be damaged easily by static electricity. Such components commonly are called Electrostatically Sensitive (ES) Devices. Examples of typical ES devices are integrated circuits and some field-effect transistors and semiconductor [chip] components. The following techniques should be used to help reduce the incidence of component damage caused by electrostatic discharge (ESD).

1. Immediately before handling any semiconductor component or semiconductor-equipped assembly, drain off any ESD on your body by touching a known earth ground. Alternatively, obtain and wear a commercially available discharging ESD wrist strap, which should be removed for potential shock reasons prior to applying power to the unit under test.
2. After removing an electrical assembly equipped with ES devices, place the assembly on a conductive surface such as aluminum foil, to prevent electrostatic charge buildup or exposure of the assembly.
3. Use only a grounded-tip soldering iron to solder or unsolder ES devices.
4. Use only an anti-static solder removal device. Some solder removal devices not classified as [anti-static (ESD protected)] can generate electrical charge sufficient to damage ES devices.
5. Do not use freon-propelled chemicals. These can generate electrical charges sufficient to damage ES devices.
6. Do not remove a replacement ES device from its protective package until immediately before you are ready to install it. (Most replacement ES devices are packaged with leads electrically shorted together by conductive foam, aluminum foil or comparable conductive material).
7. Immediately before removing the protective material from the leads of a replacement ES device, touch the protective material to the chassis or circuit assembly into which the device will be installed.

   Caution

   Be sure no power is applied to the chassis or circuit, and observe all other safety precautions.
8. Minimize bodily motions when handling unpackaged replacement ES devices. (Otherwise ham less motion such as the brushing together of your clothes fabric or the lifting of your foot from a carpeted floor can generate static electricity (ESD) sufficient to damage an ES device).

2.2. About lead free solder (PbF)

Note: Lead is listed as (Pb) in the periodic table of elements.
In the information below, Pb will refer to Lead solder, and PbF will refer to Lead Free Solder.
The Lead Free Solder used in our manufacturing process and discussed below is (Sn+Ag+Cu).
That is Tin (Sn), Silver (Ag) and Copper (Cu) although other types are available.

This model uses Pb Free solder in it's manufacture due to environmental conservation issues. For service and repair work, we'd suggest the use of Pb free solder as well, although Pb solder may be used.

PCBs manufactured using lead free solder will have the PbF within a leaf Symbol **PbF** stamped on the back of PCB.

Caution

- Pb free solder has a higher melting point than standard solder. Typically the melting point is 50 ~ 70 °F (30~40 °C) higher. Please use a high temperature soldering iron and set it to 700 ± 20 °F (370 ± 10 °C).
- Pb free solder will tend to splash when heated too high (about 1100 °F or 600 °C).
  If you must use Pb solder, please completely remove all of the Pb free solder on the pins or solder area before applying Pb solder. If this is not practical, be sure to heat the Pb free solder until it melts, before applying Pb solder.
- After applying PbF solder to double layered boards, please check the component side for excess solder which may flow onto the opposite side. (see figure below)

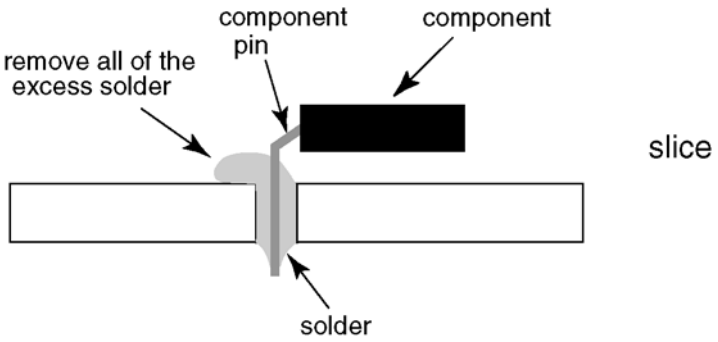

3 Service Navigation

3.1. Service Hint

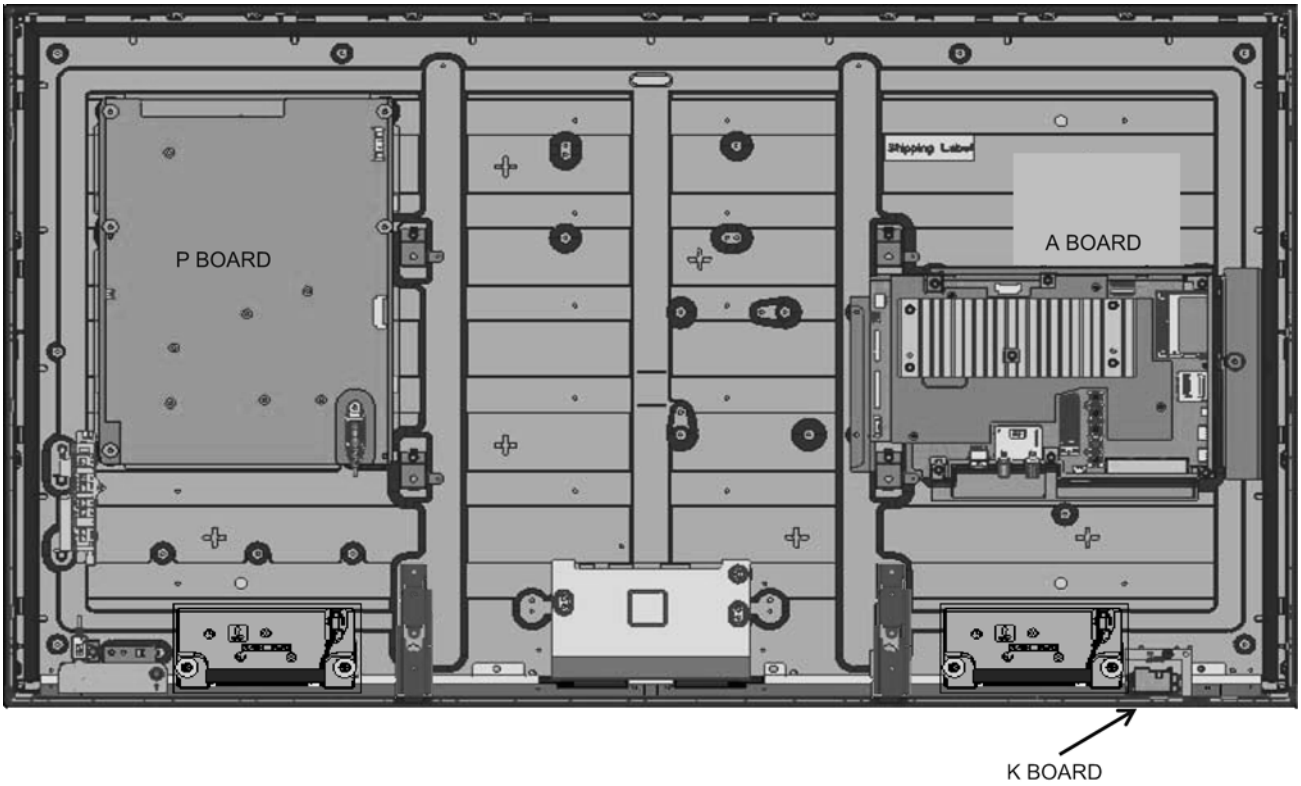

Board Name	Main Device	Remarks
A BOARD	Tuner, DVB-T2 De-Mod, ISDB De-Mod, LD6, LNB, NVT-FRC	Repairable
P BOARD	Power Supply, Control Panel, LED Driver	Repairable
K BOARD	Remote, LED, Luminance Sensor	Repairable

4 Specifications

■ **TV**

Dimensions (W × H × D)	1 087 mm × 677 mm × 214 mm (With Pedestal)	
	1 087 mm × 632 mm × 60 mm (TV only)	
Mass	15.0 kg Net (With Pedestal)	
	14.0 kg Net (TV only)	
Power source	AC 220-240 V, 50 / 60 Hz	
Rated power consumption	160 W	
Standby power consumption	0.20 W	
Visible screen size (diagonal)	121 cm	
Display resolution	3 840 (W) × 2 160 (H)	
Panel	LED backlight Liquid Crystal Display	
Speaker output	20 W (10 W + 10 W)	
Connection terminals		
AV IN (COMPONENT / VIDEO)	**VIDEO**	RCA PIN Type × 1 1.0 V[p-p] (75 Ω)
	AUDIO L - R	RCA PIN Type × 2 0.5 V[rms]
	Y	1.0 V[p-p] (including synchronisation)
	P_B/C_B, P_R/C_R	±0.35 V[p-p]
HDMI 1 / 2 / 3 input	TYPE A Connectors	
	HDMI1 / 2: 4K, 3D (3D content of 4K format is not supported.), Content Type, Audio Return Channel	
	HDMI3: 4K, 3D (3D content of 4K format is not supported.), Content Type	
	• This TV supports 'HDAVI Control 5' function.	
ETHERNET	10BASE-T/100 BASE-TX	
USB 1 / 2	DC 5 V, Max. 500 mA [Hi-Speed USB (USB 2.0)]	
DIGITAL AUDIO OUT	PCM / Dolby Digital / DTS, Fibre optic	

Receiving systems / Band name

	17 SYSTEMS	FUNCTION
1	PAL B, G, H	Reception of broadcast transmissions and Playback from Video Cassette Tape Recorders
2	PAL I	
3	PAL D, K	
4	SECAM B, G	
5	SECAM D, K	
6	SECAM K1	
7	NTSC M (NTSC 3.58 / 4.5 MHz)	
8	NTSC 4.43 / 5.5 MHz	Playback from Special VCR's or DVD
9	NTSC 4.43 / 6.0 MHz	
10	NTSC 4.43 / 6.5 MHz	
11	NTSC 3.58 / 5.5 MHz	
12	NTSC 3.58 / 6.0 MHz	
13	NTSC 3.58 / 6.5 MHz	
14	SECAM I	
15	PAL 60 Hz / 5.5 MHz	Playback from Special Disc Players and Special VCR's or DVD
16	PAL 60 Hz / 6.0 MHz	
17	PAL 60 Hz / 6.5 MHz	
Digital TV	7 MHz VHF / 8 MHz UHF free-to-air TV broadcast reception	

Receiving channels (Analogue TV)

VHF BAND	2 - 12	(PAL / SECAM B, K1)
	0 - 12	(PAL B AUST.)
	1 - 9	(PAL B N.Z.)
	1 - 12	(PAL / SECAM D)
	1 - 12	(NTSC M Japan)
	2 - 13	(NTSC M USA)
UHF BAND	21 - 69	(PAL G, H, I / SECAM G, K, K1)
	28 - 69	(PAL B AUST.)
	13 - 57	(PAL D, K)
	13 - 62	(NTSC M Japan)
	14 - 69	(NTSC M USA)
CATV	S1 - S20	(OSCAR)
	1 - 125	(USA CATV)
	C13 - C49	(JAPAN)
	S21 - S41	(HYPER)
	Z1 - Z37	(CHINA)
	5A, 9A	(AUST.)

Aerial input	VHF / UHF	
Operating Conditions	**Temperature**	0 °C - 40 °C
	Humidity	20 % - 80 % RH (non-condensing)
Built-in wireless LAN	**Standard compliance and Frequency range*1**	
	IEEE802.11a/n	
	5.15 GHz - 5.35 GHz, 5.47 GHz - 5.85 GHz	
	IEEE802.11b/g/n	
	2.400 GHz - 2.4835 GHz	
	Security	
	WPA2-PSK (TKIP/AES)	
	WPA-PSK (TKIP/AES)	
	WEP (64 bit/128 bit)	
Bluetooth wireless technology*2	**Standard Compliance**	
	Bluetooth 3.0	
	Frequency Range	
	2.402 GHz - 2.480 GHz	

*1: The frequency and channel differ depending on the country.
*2: Not all the Bluetooth compatible devices are available with this TV. Up to 5 devices can be used simultaneously (except the 3D Eyewear and Touch Pad Controller).

■ 3D Eyewear

Dimensions (W × H × D)	164.7 mm × 41.0 mm × 170.7 mm
Mass	Approx. 34 g
Usage temperature range	0 °C - 40 °C
Battery	Coin-shaped lithium battery CR2025
Operation time	Approx. 75 hours in continuous use of the battery made by Panasonic
Materials	
Main body / Lens section	Resin
Lens section	Liquid crystal glass

Note

- 3D Eyewear and Touch Pad Controller use Bluetooth wireless technology.
- Design and Specifications are subject to change without notice. Mass and Dimensions shown are approximate.
- For the information of the open source software, refer to [eHELP] (Support > Licence).

5 Service Mode

5.1. How to enter into Service Mode

5.1.1. Purpose

After exchange parts, check and adjust the contents of adjustment mode.
While pressing [VOLUME (-)] button of the main unit, press [INFO] button of the remote control three times within 2 seconds.

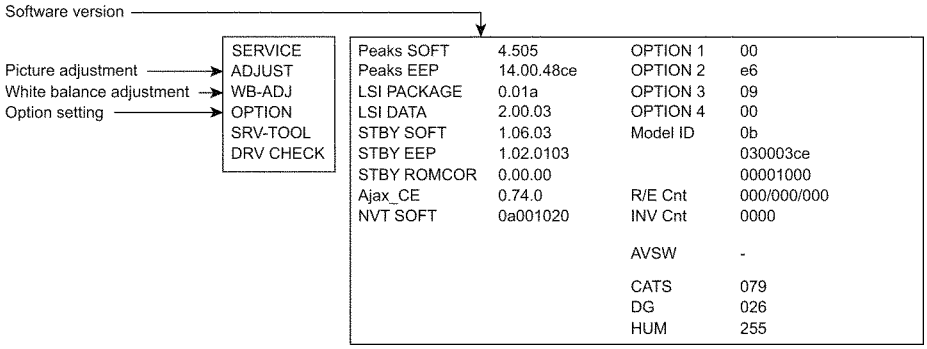

5.1.2. Key command

[1] button...Main items Selection in forward direction
[2] button...Main items Selection in reverse direction
[3] button...Sub items Selection in forward direction
[4] button...Sub items Selection in reverse direction
[VOL] button...Value of sub items change in forward direction (+), in reverse direction (-)

5.1.3. How to exit

Switch off the power with the [POWER] button on the main unit or the [POWER] button on the remote control.

5.1.4. Contents of adjustment mode

- Value is shown as a hexadecimal number.
- Preset value differs depending on models.
- After entering the adjustment mode, take note of the value in each item before starting adjustment.

Main item	Sub item	Sample Data
ADJUST	CONTRAST	
	COLOUR	
	TINT	
	SUB-BRT	
	BACKLGT	
	H POS	
	H AMP	
	V POS	
	V AMP	
	A COM	
WB-ADJ	R-GAIN	8D
	G-GAIN	AE
	B-GAIN	FF
	R-CENT	6C
	G-RENT	80
	B-CENT	A0

Main item	Sub item	Sample Data
OPTION	Boot	ROM
	STBY-SET	00
	EMERGENCY	ON
	CLK MODE	00
	CLOCK	FC7
	Y/C DELAY	DYNAMIC
	OPT 1	00000000
	OPT 2	11100110
	OPT 3	00001001
	OPT 4	00000000
	EDID-CLK	HIGH
SRV-TOOL		00
DRV CHECK		DYNAMIC

5.1.5. Display of SOS History

SOS History (Number of LED blinking) indication.
From left side; Last SOS, before Last, three occurrence before, 2nd occurrence after shipment, 1st occurrence after shipment.
This indication except 2nd and 1st occurrence after shipment will be cleared by [Self-check indication and forced to factory shipment setting].

5.1.6. Exit

1. Disconnect the AC cord from wall outlet.

5.1.7. Hotel Mode

1. Purpose
   Restrict a function for hotels.
2. Access command to the Hotel mode setup menu.
   In order to display the Hotel mode setup menu:
   While pressing [VOLUME (-)] button of the main unit, press [AV] button of the remote control three times within 2 seconds.

   Then, the Hotel mode setup menu is displayed.

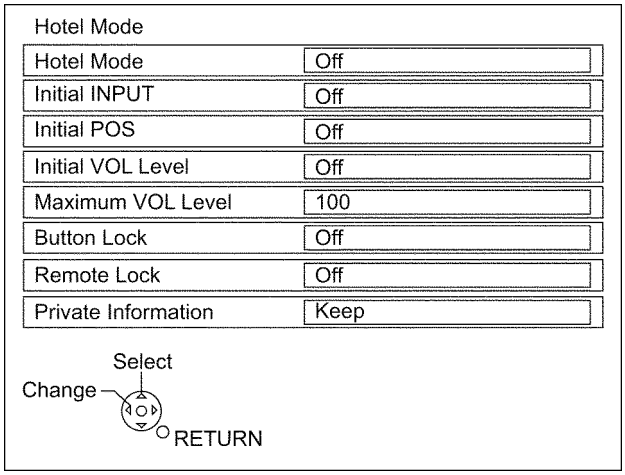

3. To exit the Hotel mode setup menu
   Disconnect AC power cord from wall outlet.
4. Explain the Hotel mode setup menu

Item	Function
Hotel Mode	Select hotel mode On/Off
Initial INPUT	Select input signal modes. Set the input, when each time power is switched on. Selection : Off,Analogue,DVB-C,DVB-T,AV1,AV2,HDMI1, HDMI2 • Off: give priority to a last memory. However, Euro model is compulsorily set to TV.
Initial POS	Select programme number. Selection : Off/0 to 99 • Off: give priority to a last memory.
Initial VOL LEVEL	Adjust the volume when each time power is switched on. Selection Range : Off/0 to 100 • Off: give priority to a last memory.
Maximum Vol Level	Adjust maximum volume. Range : 0 to 100
Button Lock	Select local key conditions. Selection : Off/SETUP/MENU/ALL • OFF: altogether valid • SETUP: only F-key is invalid (Tuning guide (menu) can not be selected.) • MENU: only F-key is invalid (only Volume/Mute can be selected.) • ALL: altogether invalid.
Remote Lock	Select remote control key conditions. Selection : Off/SETUP/MENU • OFF: altogether valid. • SETUP: only Setup menu is invalid. • MENU: Picture/Sound/Setup menu are invalid.
Hotel Mode USB	Basically after user already setup the hotel mode according to their criteria, what they need to do is • insert USB (while in hotel mode) • choose ‘Copy TV to USB’ to copy the setting into the USB (a file will be created to store the hotel mode setting in the USB) • switch ‘OFF’ the unit • pull out USB from unit To copy the hotel mode setting from USB. • enter hotel mode • insert USB • choose ‘Copy USB to TV’ • follow instruction as shown on the units • once finish, switch ‘OFF; the unit • pull out USB from unit
Private Information	Select private information for VIERA Cast is Keep or Reset if Hotel mode is set to [On] when TV power on Selection : Keep/Reset • Keep: private information for VIERA Cast is keep • Reset: private information for VIERA Cast is reset

6 Troubleshooting Guide

Use the self-check function to test the unit.

1. Checking the IIC bus lines
2. Power LED Blinking timing

6.1. Check of the IIC bus lines

6.1.1. How to access

6.1.2. Self-check indication only

Produce TV reception screen, and while pressing [VOLUME (-)] button on the main unit, press [OK] button on the remote control for more than 3 seconds.

6.1.3. Self-check indication and forced to factory shipment setting

Produce TV reception screen, and while pressing [VOLUME (-)] button on the main unit, press [MENU] button on the remote control for more than 3 seconds.

6.1.4. Exit

Disconnect the AC cord from wall outlet.

6.1.5. Screen display

48

Self check complete

H14TUN	OK	PEAKS-SOFT	4.505		
H90STBY	OK	PEAKS-EEP	14.00.48ce		
H38FRC	OK	LSI-PACKAGE	0.01a		
H07TEMP	OK	LSI-RELEASE	2.03	MODEL ID	0b
H17LAN	OK	STBY-SOFT	1.06.03		030003ce
H00FE	OK	STBY-EEP	1.02.0103		00001000
H96ID	08	NVT SOFT	0a001020		
H97ID2	OK				
H45BT	OK				
H42WiFi	OK				
H80HDMISW	OK				
H81HDMISW	OK				
H92MEM1	OK				
H91MEM2	OK				

6.2. Power LED Blinking timing chart

1. Subject
   Information of LED Flashing timing chart.
2. Contents
   When an abnormality occurs, the protection circuit will operate and reset the unit to stand by mode. During this time, the defective block can be identified by the number of blinking times of the Power LED on the front panel of the unit as follow:

Blinking times	Contents & Check point
1	BL_SOS
3	IROM-SOS
6	FPGA_SOS
7	SUB_3.3V
8	SOS
9	SOUND_SOS
10	GCX/FRC/NVT_SOS
11	FAN_SOS
12	BE (sLD8/LD6/PRO4) SOS
13	Emergency SOS

6.3. Method of detecting SOS

1. BL_SOS
   Detection beginning after one second pass from 'BL_ON'=ON

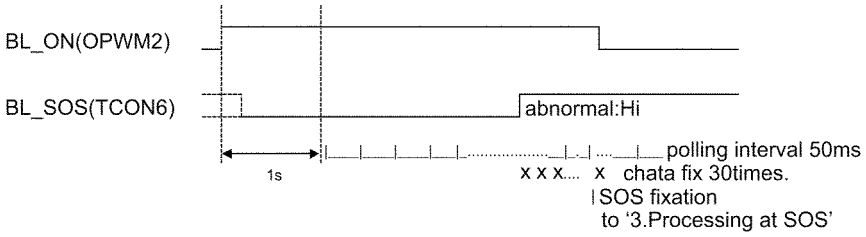

2. TV_SOS
   Detection beginning after one second pass from 'AMP_SHUTDOWN'=ON

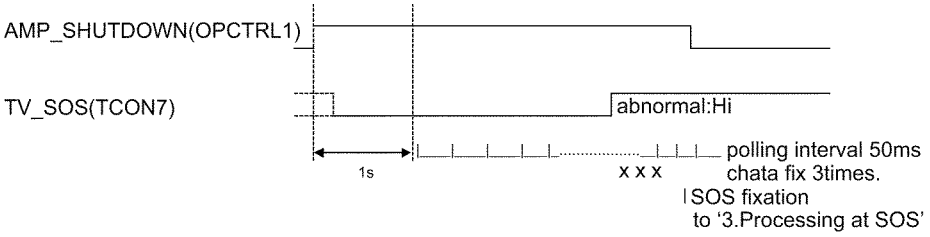

3. SOUND_SOS
   Detection beginning 'AMP_SHUTDOWN'=ON

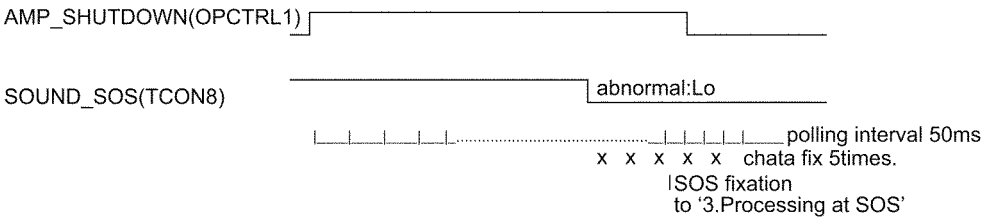

6.4. LCD Panel test mode

Purpose:
To find the possible failure point where in LCD Panel or Printed Circuit Board when the abnormal picture is displayed.

How to Enter:
While pressing [VOLUME (-)] button of the main unit, press [OPTION] button of the remote control three times within 2 seconds.

How to Exit:
Disconnect AC plug from wall outlet.

How to confirm:
If the abnormal picture is displayed, go into LCD Panel test mode to display the several test patterns.
And then, judge by the following method.
Still abnormal picture is displayed: The cause must be in LCD Panel.
Normal picture is displayed: The cause must be in A board.

Remarks:
The test pattern is created by the circuit in LCD Panel.
In LCD Panel test mode, this test pattern is displayed unaffected by signal processing for RF or input signal.
If the normal picture is displayed, LCD Panel must be okay and the cause of failure must be in A board.

6.5. No Power

First check point
There are following 2 states of No Power indication by power LED.

1. No lit
2. Red is lit then turns red blinking a few seconds later. (See 6.2.)

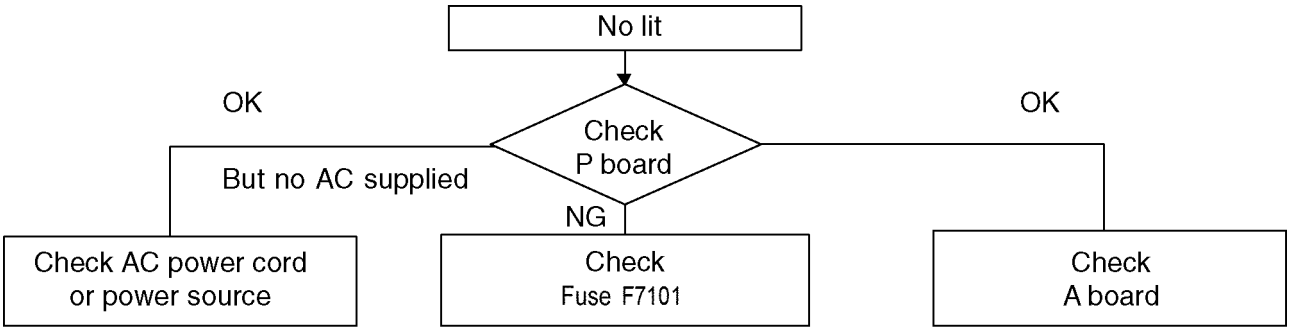

7 Disassembly and Assembly Instructions

7.1. Speaker & H/Sink Ass'y

1. Fix sp bracket.
2. Install sp unit.

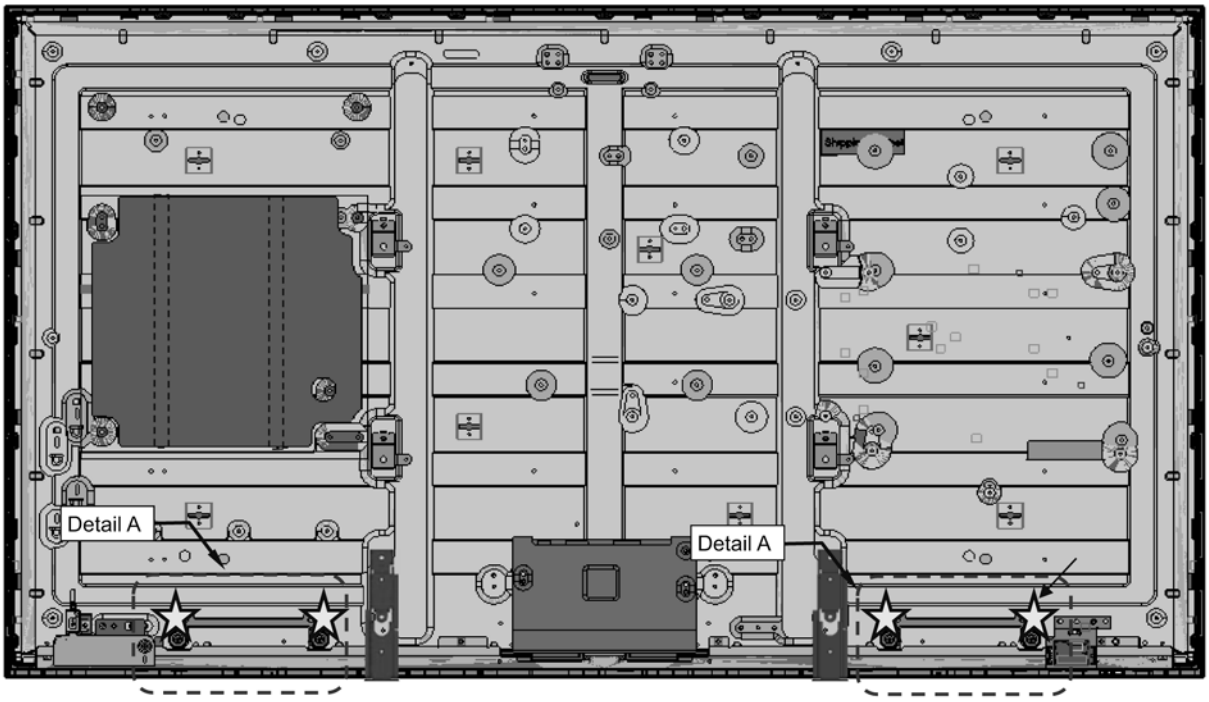

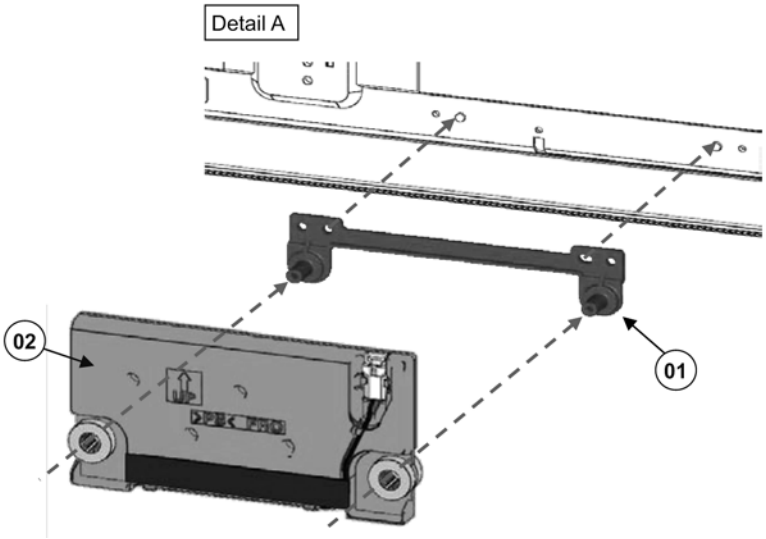

No	Description	Qty	UOM	Remarks
01	SP_BRACKET	2	PC	
02	SPEAKER_UNIT	2	PC	
03	SCREW (SP4)	4	PC	6 ± 1 kgf.cm

7.2. LCD Panel Fixing & Handling Method

1. Place down the cabinet as shown below.
2. Fix LCD panel into the cabinet by taking below precautions.

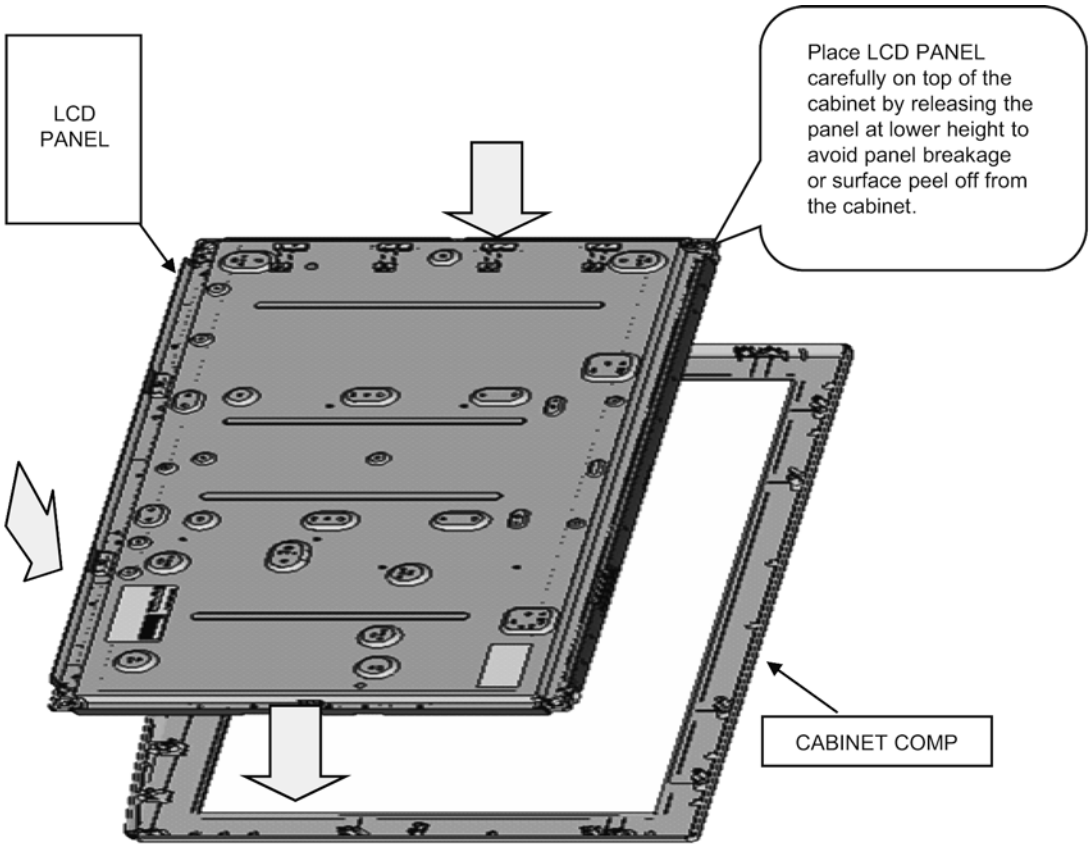

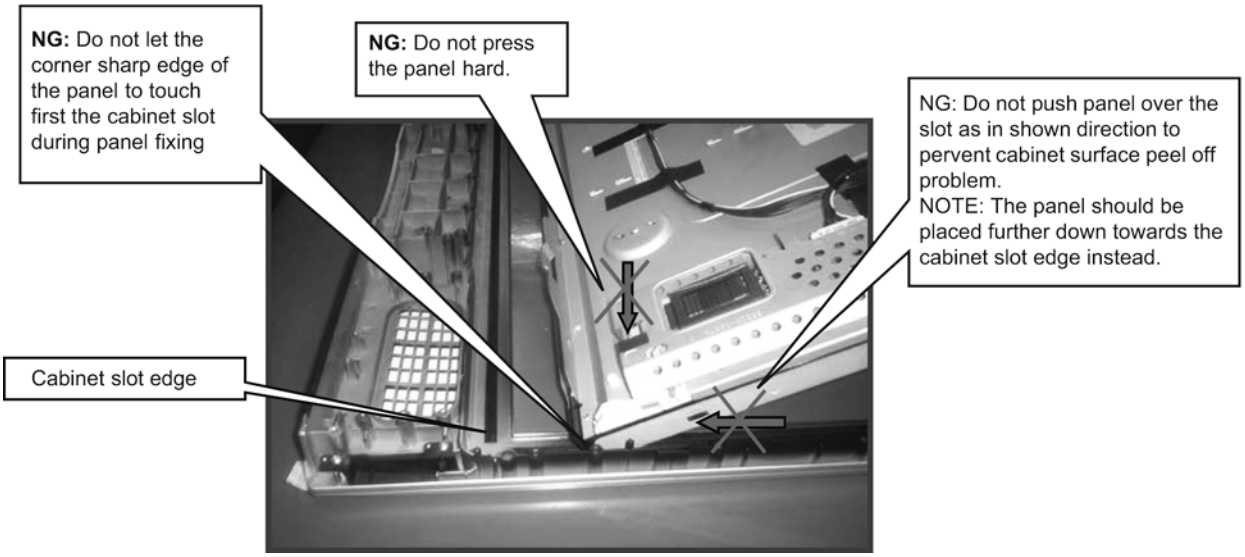

Other general precautions

1. Do not press panel surface to avoid blue spot on the panel display.
2. Do not use hard cloth or rub the surface too hard. This may cause scratches on the surface.
3. Take care not to subject the TV's surface to water or detergent. Any liquid (including pets urine) if enters the product could lead to TV failure.
4. Take care not to subject the surface to insect repellent, solvent, thiner or other voiltile substances. This may degrade surface quality or cause peeling of the paint.
5. The surface of the display panel is specially treated and may be easily damaged. Take care not to tap or scratch with your fingernail or other hard objects.

7.3. Module & LED Panel Ass'y

1. Fix barrier.
2. Assemble led panel ass'y and fix to cabinet.
3. Install modules and fix with screw.

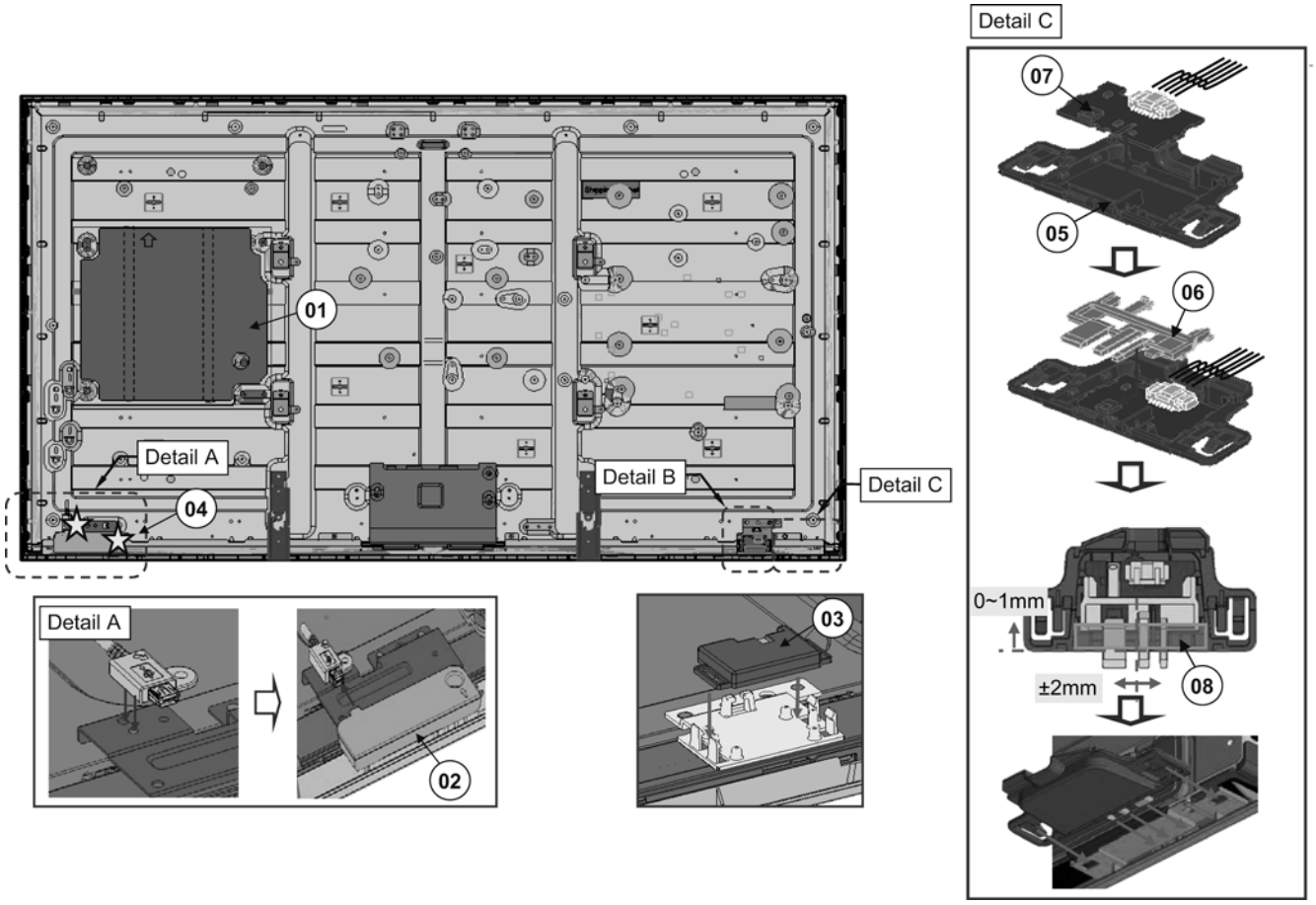

No	Description	Qty	UOM	Remarks
01	BARRIER	1	PC	
02	WIFI_MODULE	1	PC	
03	BLUETOOTH_MODULE	1	PC	
04	SCREW (WF2)	2	PC	6 ± 1 kgf.cm
05	LED_PANEL_CASE	1	PC	
06	LED_PANEL	1	PC	
07	K-BOARD	1	PC	*Refer to chassis part list
08	SPONGE (T3 × 40 × 10)	1	PC	

7.4. PCB & AV Bracket Ass'y

1. Stick felt and sponge.
2. Fix A, P-board and control button ass'y.
3. Install av brackets.

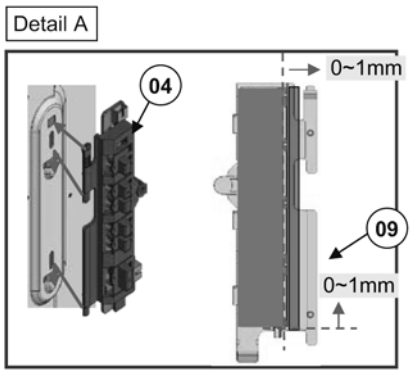

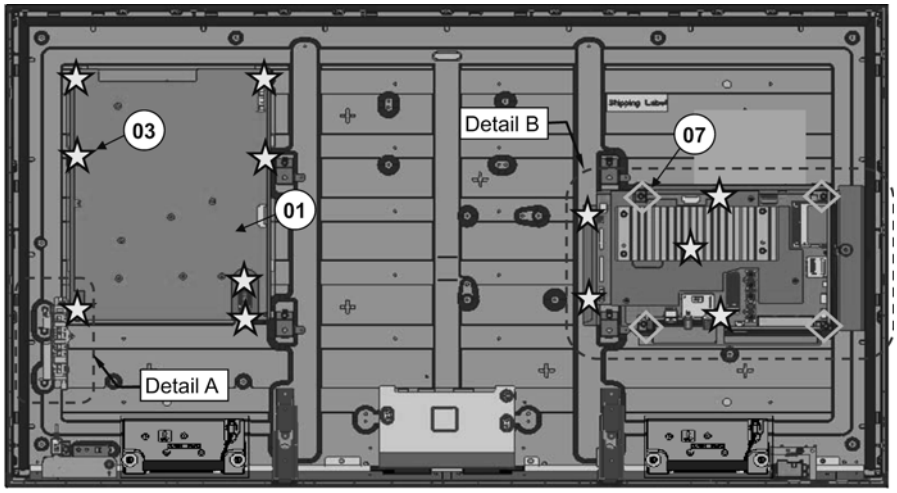

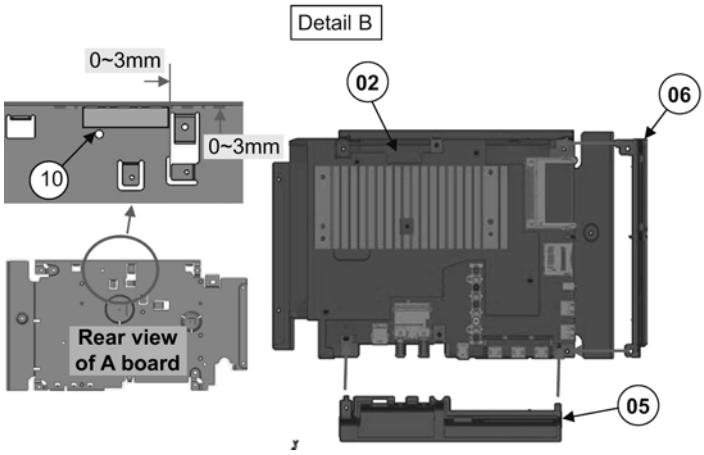

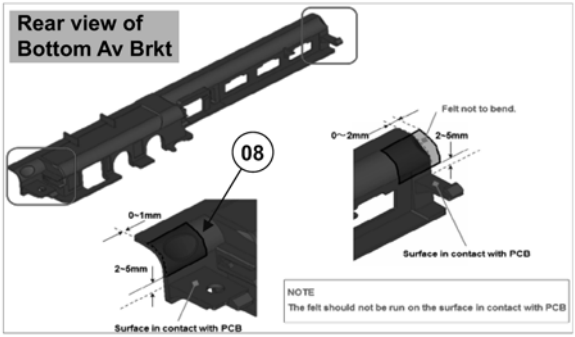

No	Description	Qty	UOM	Remarks
01	P-BOARD	1	PC	*Refer to chassis part list
02	A-BOARD	1	PC	*Refer to chassis part list
03	SCREW (FIN5/P7)	2	PC	6 ± 1 Kgf.cm
04	KEY_BUTTON_BRACKET	1	PC	
05	BOTTOM_AV_BRACKET	1	PC	
06	SIDE_AV_BRACKET	1	PC	
07	SCREW (A4)	4	PC	6 ± 1 Kgf.cm
08	FELT (0.55 × 10 × 10)	2	PC	
09	FELT (0.45 × 95 × 8)	1	PC	
10	GASKET (T15 × W15 × L40)	1	PC	

7.5. Brackets Ass'y

Fix vesa metal, bottom metal, wifi metal and bluetooth bracket to panel.

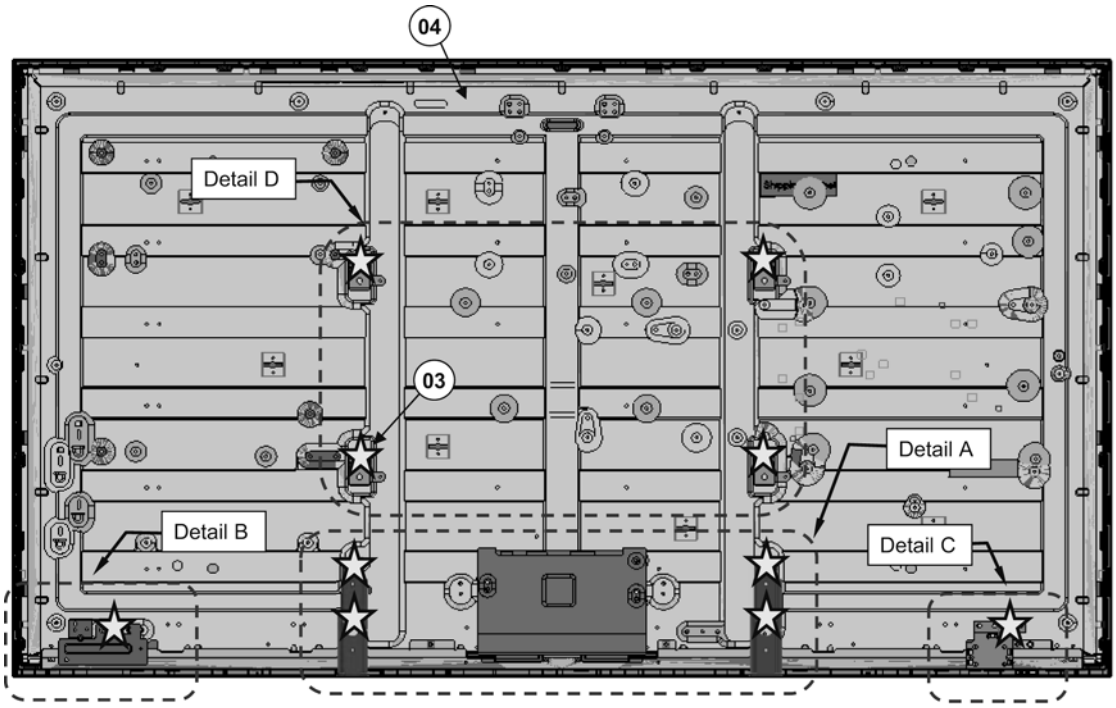

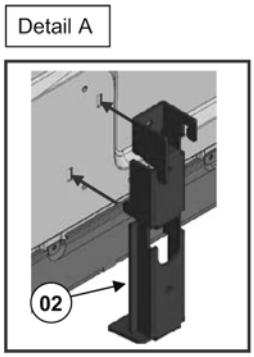

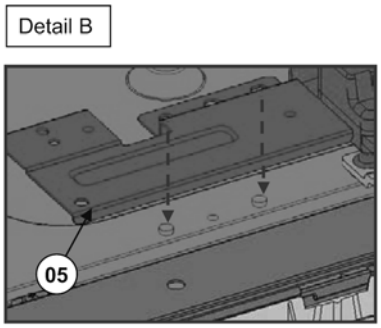

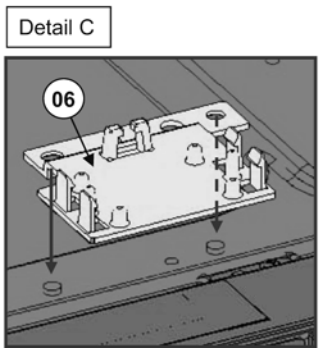

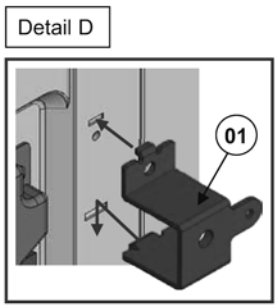

No	Description	Qty	UOM	Remarks
01	VESA METAL	4	PC	
02	BOTTOM METAL	2	PC	
03	SCREW (VM4/MTL4/WF1/BT1)	10	PC	6 ± 1 Kgf.cm
04	LCD_PANEL	1	PC	
05	WIFI_METAL	1	PC	
06	BLUETOOTH_BRACKET	1	PC	

7.6. Pedestal Ass'y

1. Install neck base to metal frame and fix with screw.
2. Fix rubber foot.
3. Stick frame sheet to pedestal.
4. Packed pedestal ass'y with bag.

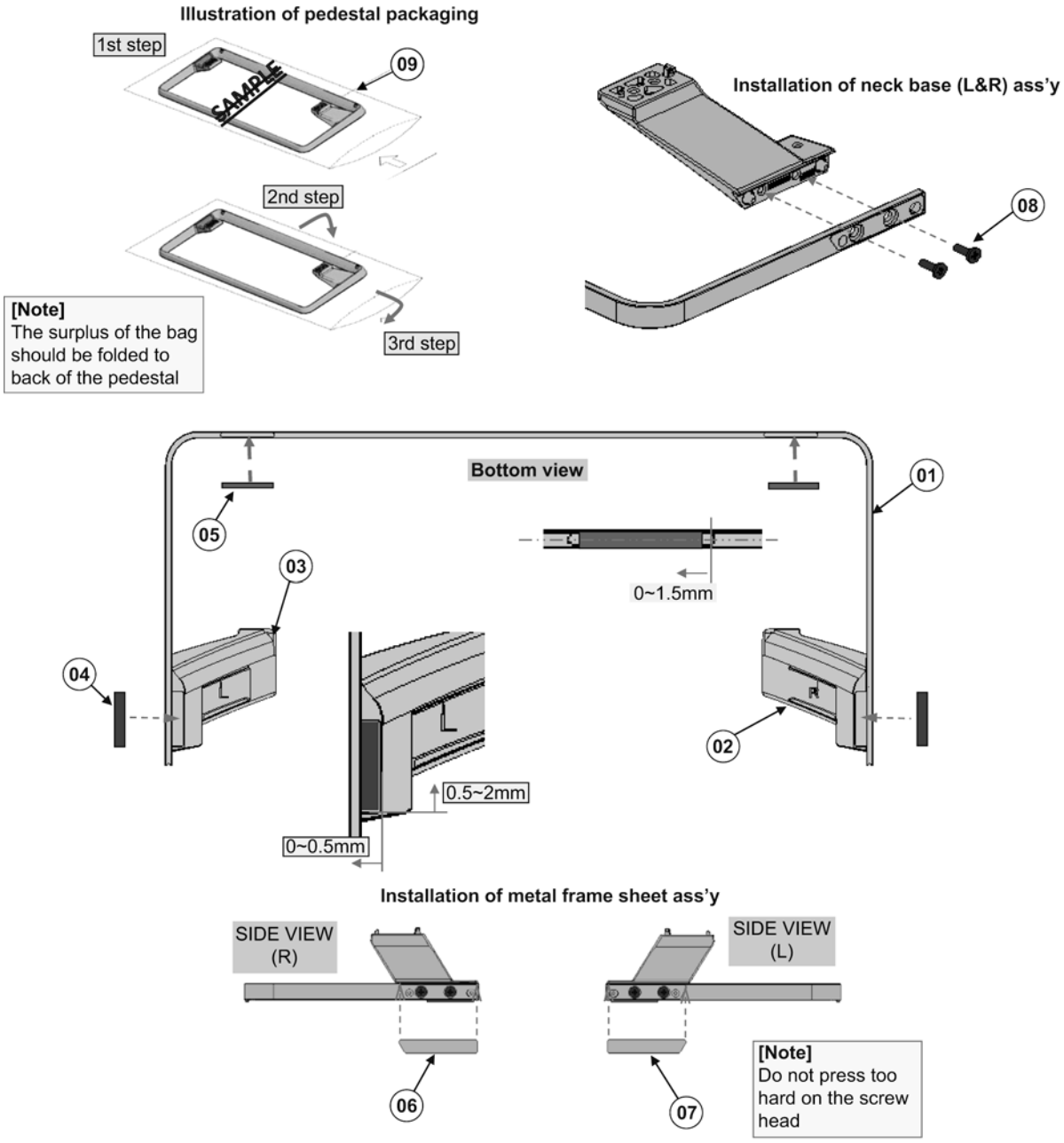

No	Description	Qty	UOM	Remarks
01	METAL FRAME	1	PC	
02	NECK BASE-R	1	PC	
03	NECK BASE-L	1	PC	
04	RUBBER FOOT	2	PC	
05	RUBBER FOOT	2	PC	
06	METAL FRAME SHEET-R	1	PC	
07	METAL FRAME SHEET-L	1	PC	
08	M5 × 12_SCREW	4	PC	18 ± 2.7 kgf.cm
09	BAG (PEDESTAL)	1	PC	

7.7. Back Cover Installation

Install Back cover and fix with screw.

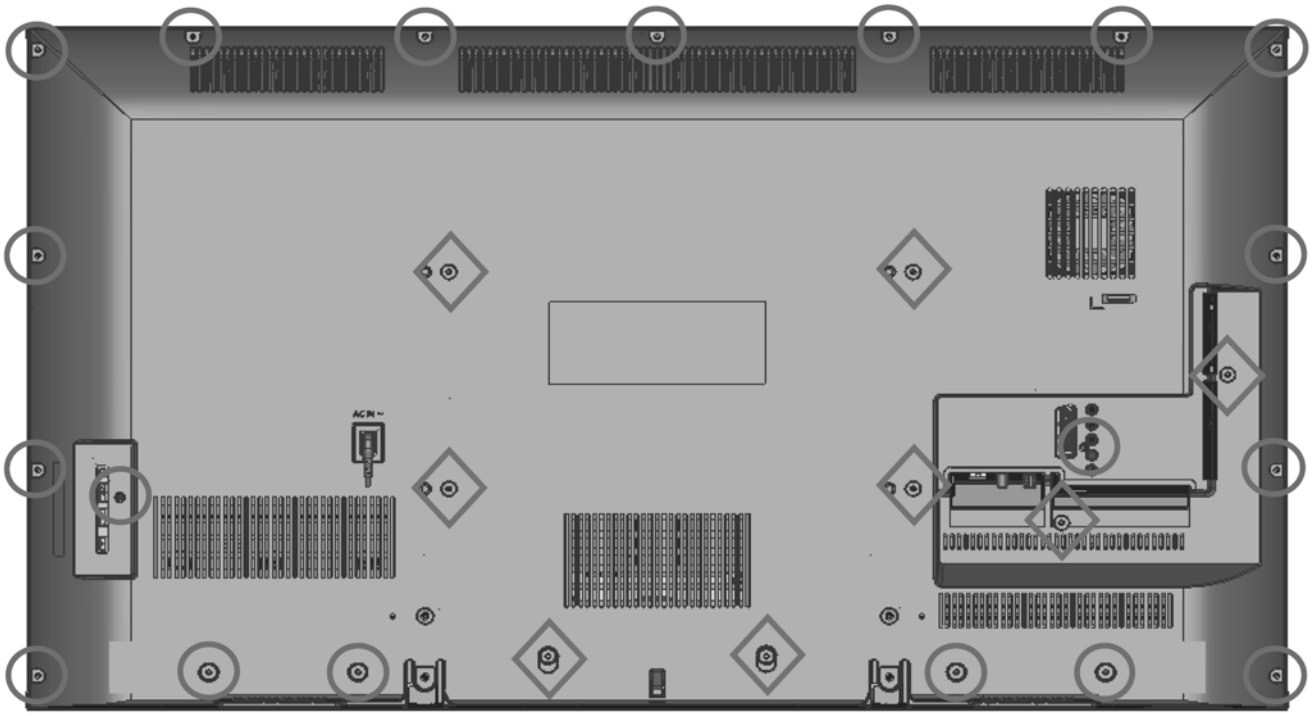

No	Description	Qty	UOM	Remarks
01	SCREW (BC4/VESA4)	8	PC	6 ± 1 Kgf.cm
02	SCREW (BC17/REAR_AV1/CTRL1)	19	PC	6 ± 1 Kgf.cm
03	BACK_COVER	1	PC	

8 Measurements and Adjustments

8.1. Voltage chart of A-board

Set A-Board to a dummy set and check the satisfaction with the specified voltage as following table.

Board	Checked Name	Test Point	Specification	In/Out	Target Board Suffix
A	PNL12V	TP8720	12V ± 1.2V	output	ALL
A	SUB5V	TP8750	5.17V ± 0.25V	output	ALL
A	SUB3.3V	TP8701	3.39V ± 0.15V	output	ALL
A	HDMI3.3V	TP8751	3.3V ± 0.17V	output	ALL
A	SUB_AI_3.3V	TP2206	3.3V ± 0.17V	output	ALL
A	EU_TU_1.8V	TP5704	1.84V ± 0.1V	output	AF, BM, EM, HF, SF, SV, YM
A	SUB1.5V	TP8101	1.52V ± 0.08V	output	ALL
A	SUB1.1V	TP8100	1.21 ± 0.06V	output	ALL
A	USB-WiFi	TP8620	5.10 ± 0.20V	output	ALL
A	LNB_PWR_M	TP6703	18V ± 1.0V	output	YM
A	LNB_PWR_M	TP6703	15V ± 1.5V	output	JM, JN, JP
A	SUB9V	TP5004	9V ± 0.4V	output	BM, EM, YM
A	WOL3.3V	TP8640	3.3V ± 0.17V	output	BM, EM, YM
A	JPN_3.3V	TP5700	3.3V ± 0.17V	output	JM, JN, JP
A	JPN_1.2V	TP5702	1.22V ± 0.1V	output	JM, JN, JP
A	SD3.3V	TP8617	3.34V ± 0.17V	output	All
A	LNA5V	TP5705	5.0V ± 0.25V	output	JM, JN, JP
A	JP_TU_2.5V	TP5703	2.53V ± 0.1V	output	JM, JN, JP
A	DMD_1.1V	TP5703	1.12V ± 0.11V	output	BM, EM, SF, SV, YM
A	SUB_CI_5V	TP8400	5.0V ± 0.5V	output	BM, EM, YM
A	USB1	TP8627	5.0V ± 0.25V	output	All
A	USB2	TP8615	5.0V ± 0.25V	output	All
A	NT2.5V	TP9170	2.52V ± 0.12V	output	All
A	NT1.5V	TP9160	1.52V ± 0.07V	output	All
A	NT1.1V	TP9150	1.13V ± 0.06V	output	All
A	RIORX3.3V	TP4602	3.35V ± 0.17V	output	All
A	RIO1.2V	TP4601	1.22V ± 0.06V	output	All
A	HDMISW3.3V	TP3707	3.3V ± 0.17V	output	All

9 Block Diagram

9.1. Main Block Diagram

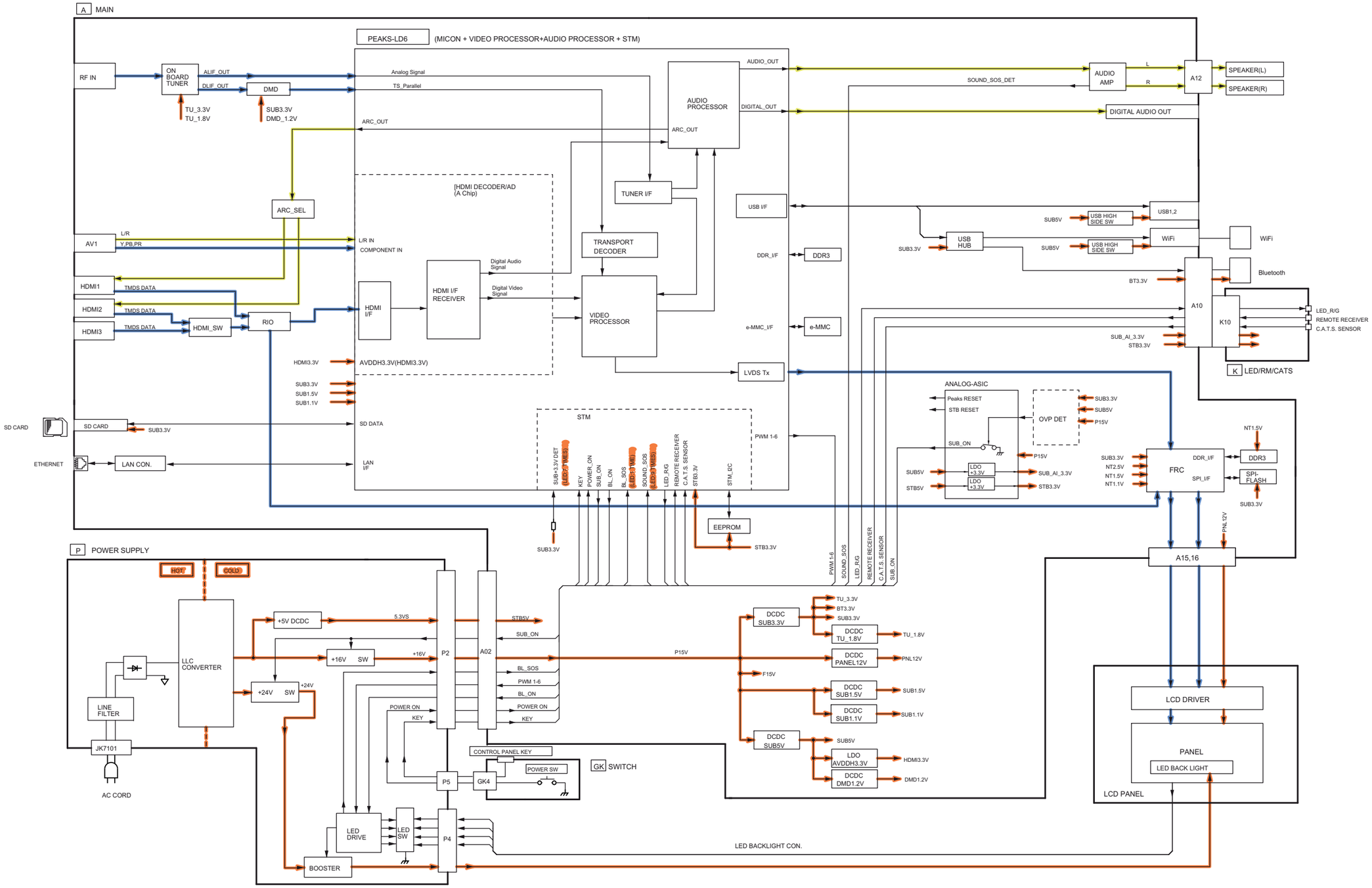

9.2. Detailed Block Diagram (1/3)

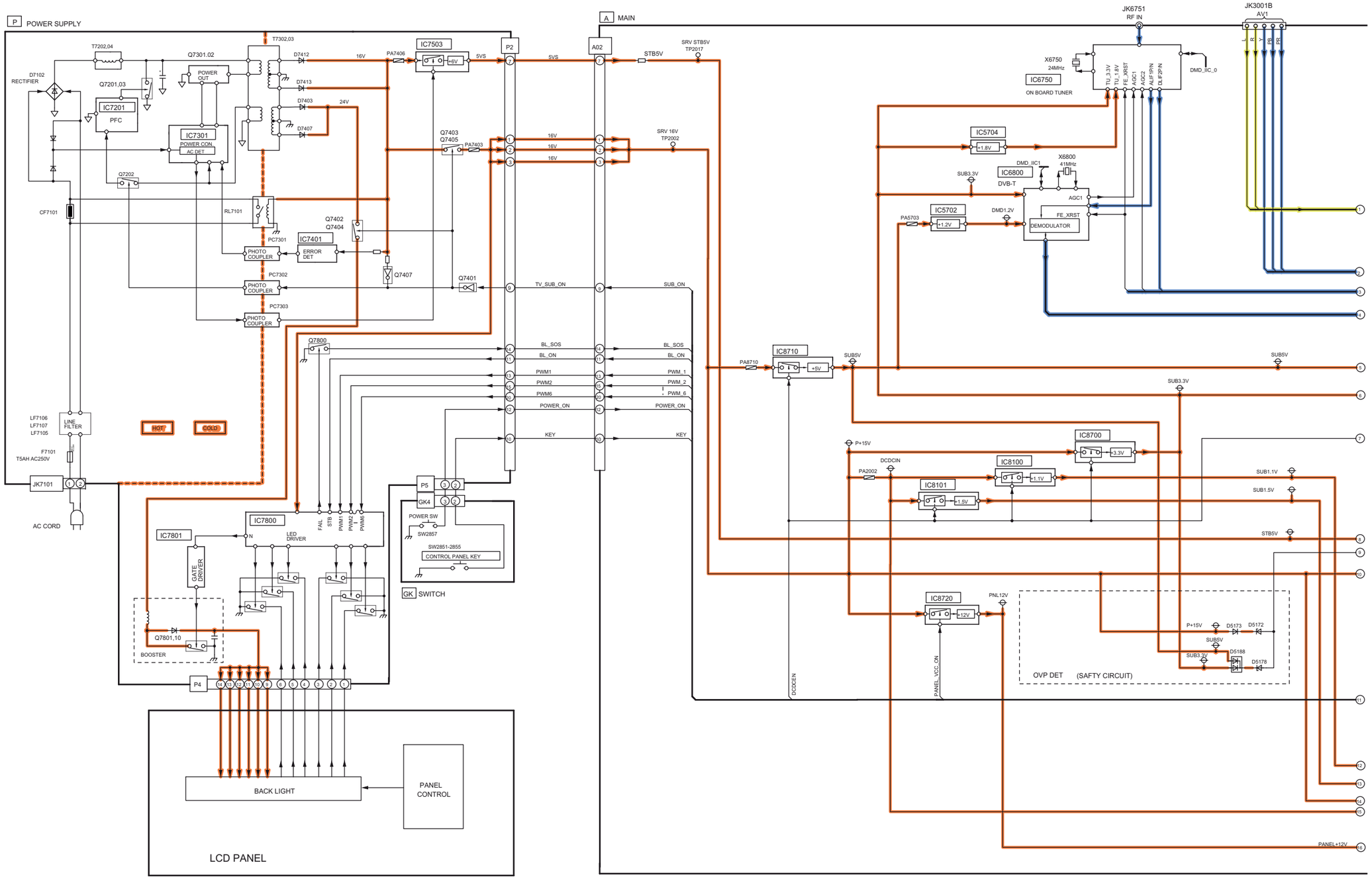

9.3. Detailed Block Diagram (2/3)

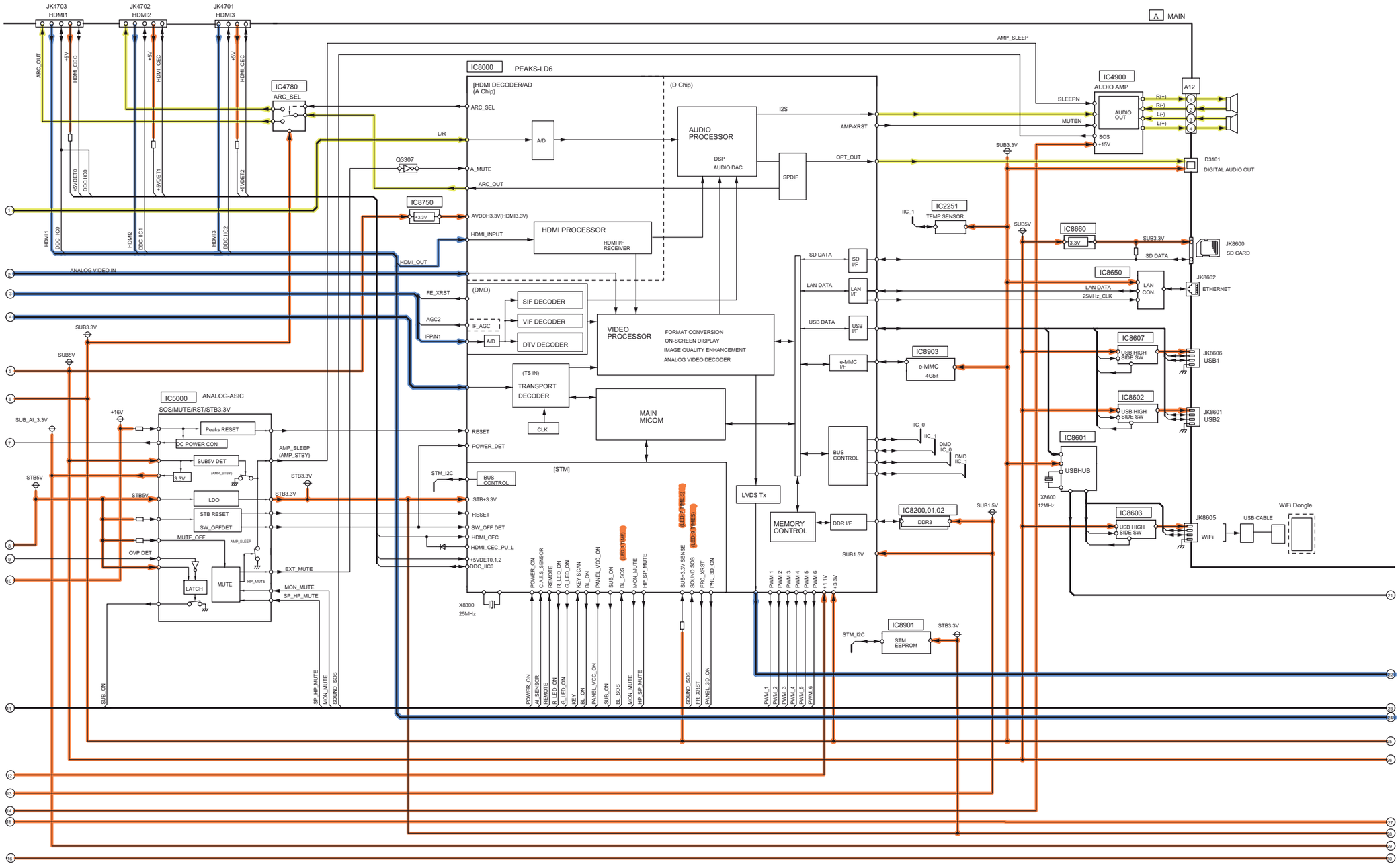

9.4. Detailed Block Diagram (3/3)

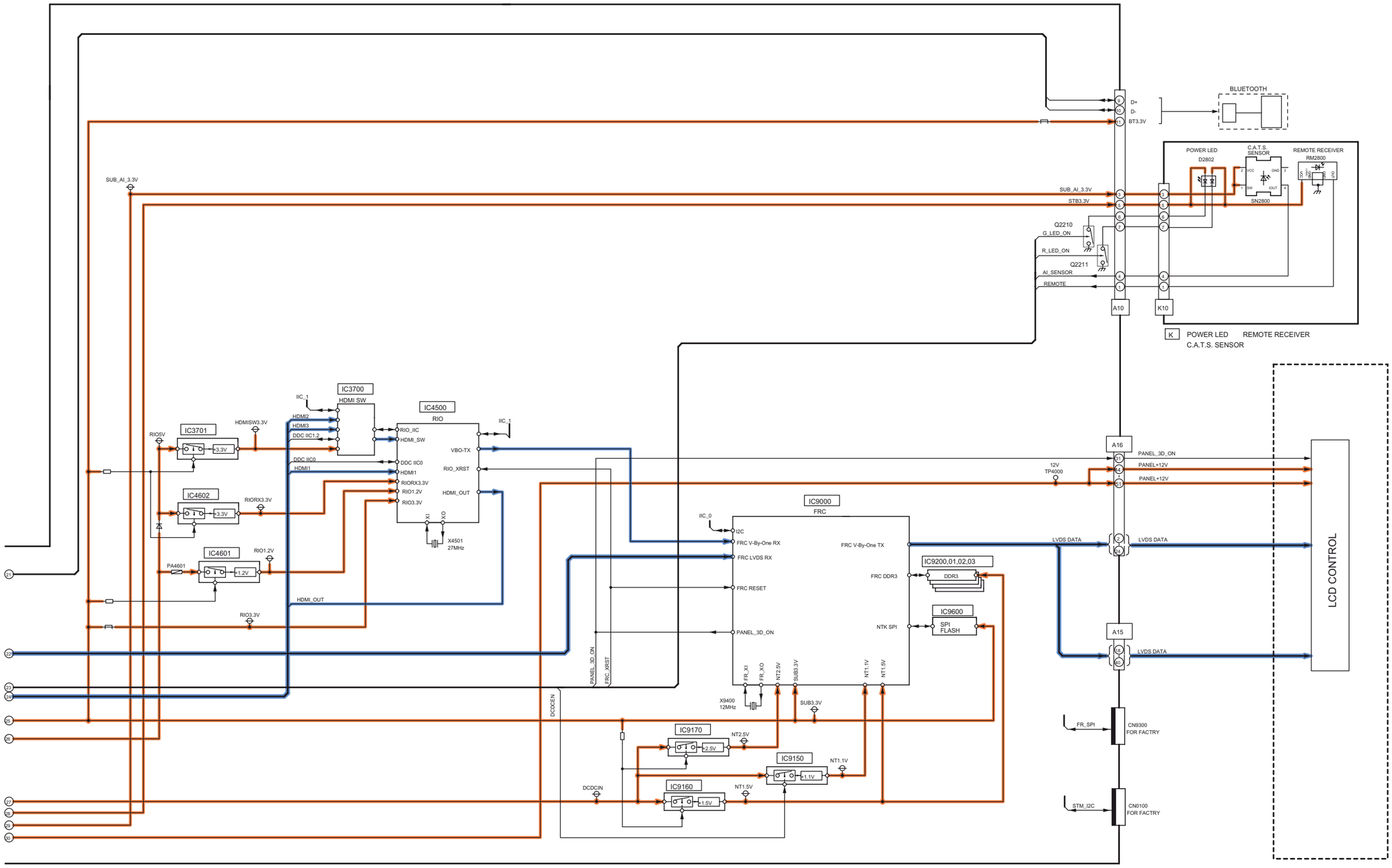

10 Wiring Connection Diagram

10.1. Wire Dressing

1. Do wire dressing follow below spec. (stick PET tape as shown.)
2. Stick tapes and rub evently at lease twice.

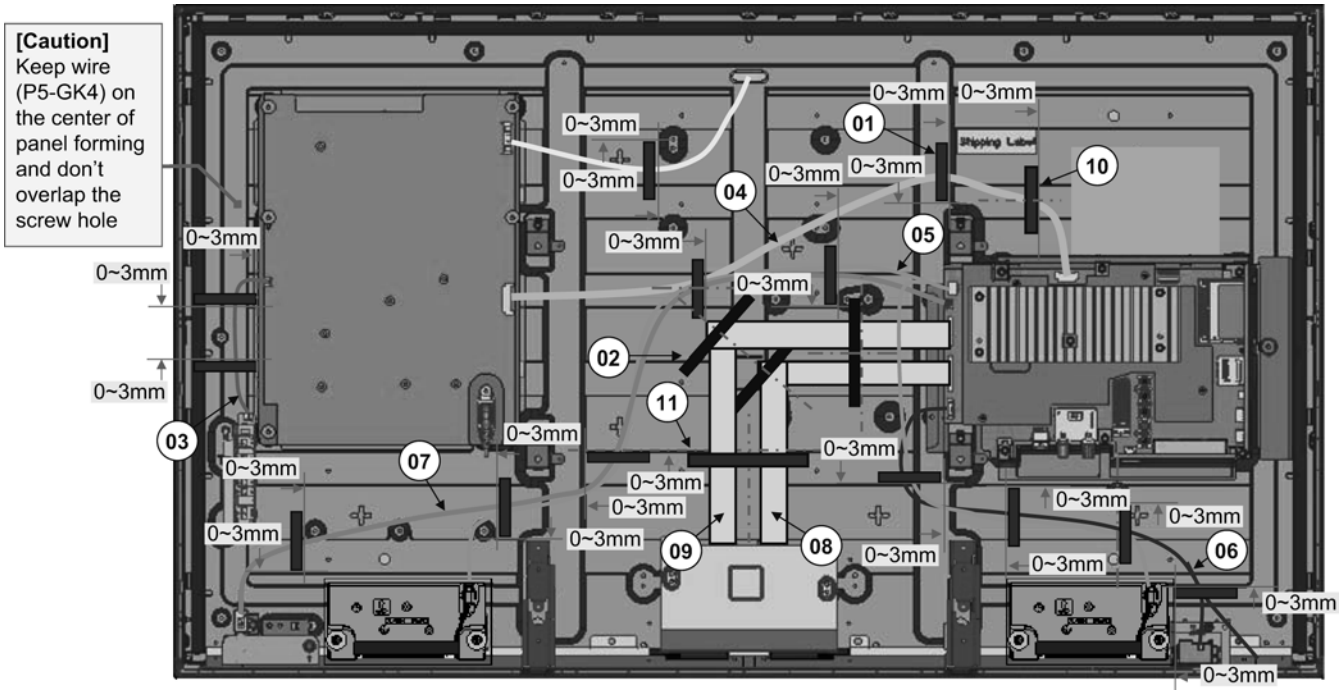

No	Description	Qty	UOM	Remarks
01	PET_TAPE (0.06*9+0.11*4)	1.17	MT	60mm × 11
02				110mm × 3
03	WIRE (P5-GK4)	1	PC	
04	WIRE (A02-P2)	1	PC	
05	WIRE (A12-SPL/SPR)	1	PC	
06	WIRE (A10-K10/BT)	1	PC	
07	WIFI_USB_CABLE	1	PC	
08	LVDS FFC (41PIN)	1	PC	
09	LVDS FFC (51PIN)	1	PC	
10	PET AL TEAP (0.08*1)	1	PC	
11	PET AL TAPE (0.12*1)	1	PC	

11 Schematic Diagram

Model No. : TH-48AX670S A-Board (1/22)

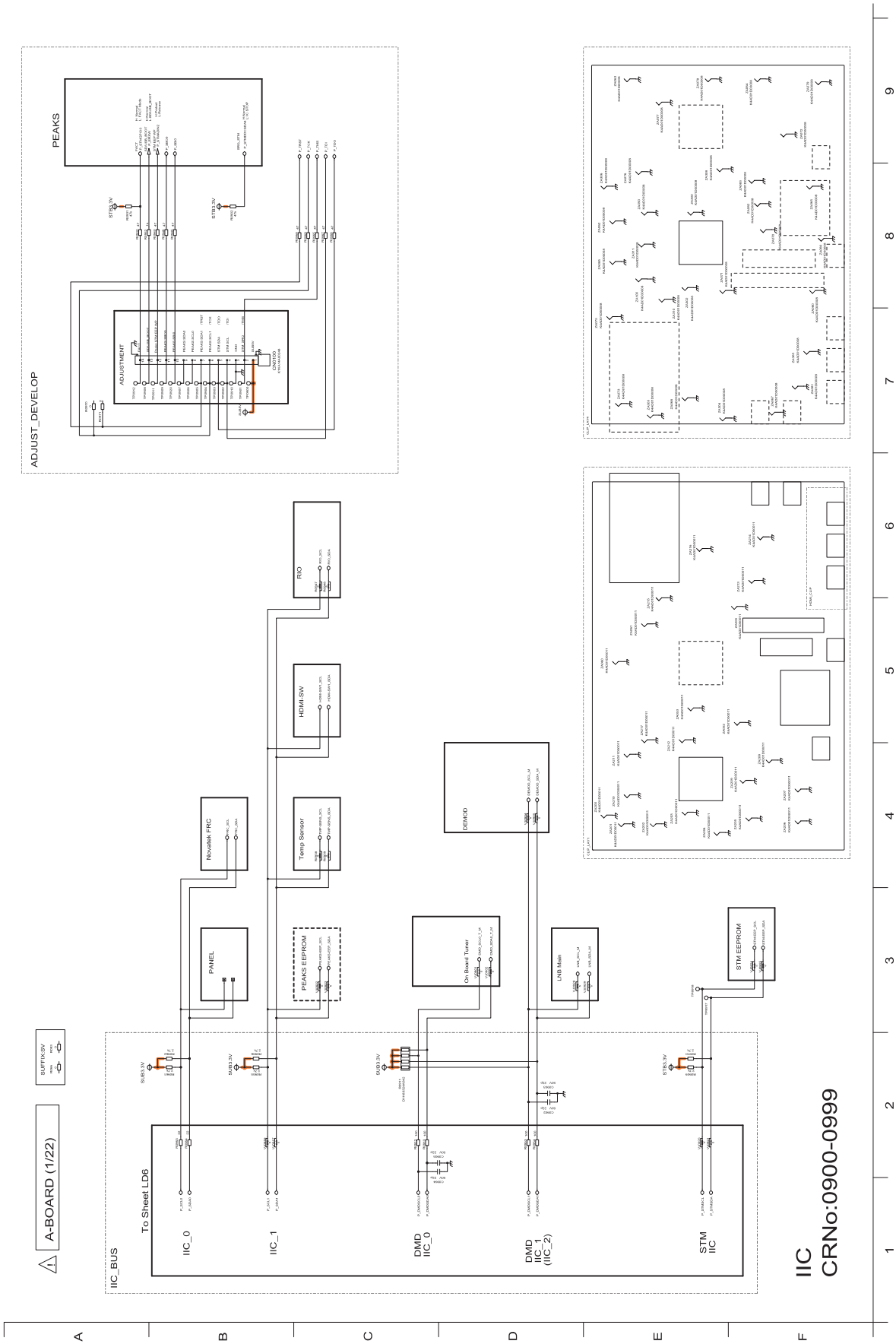

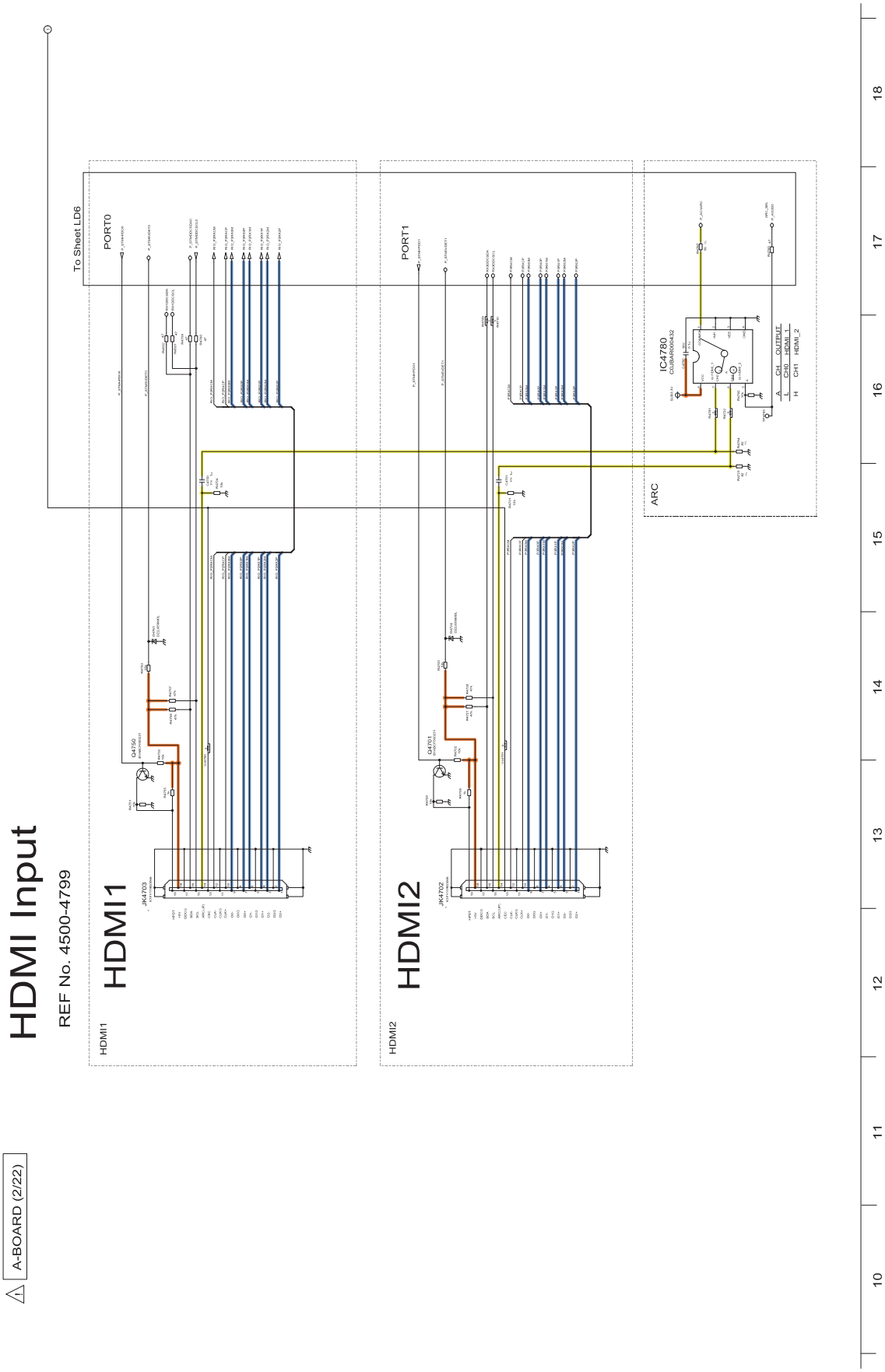
HDMI Input
REF No. 4500-4799
A-BOARD (2/22)
HDMI1
HDMI1
HDMI2
HDMI2
PORT0
PORT1
To Sheet LD6
ARC
JK4703
JK4702
Q4790
Q4701
IC4780
CU5BA500432
A CH OUTPUT
L CH0 HDMI_1
H CH1 HDMI_2
10
11
12
13
14
15
16
17
18

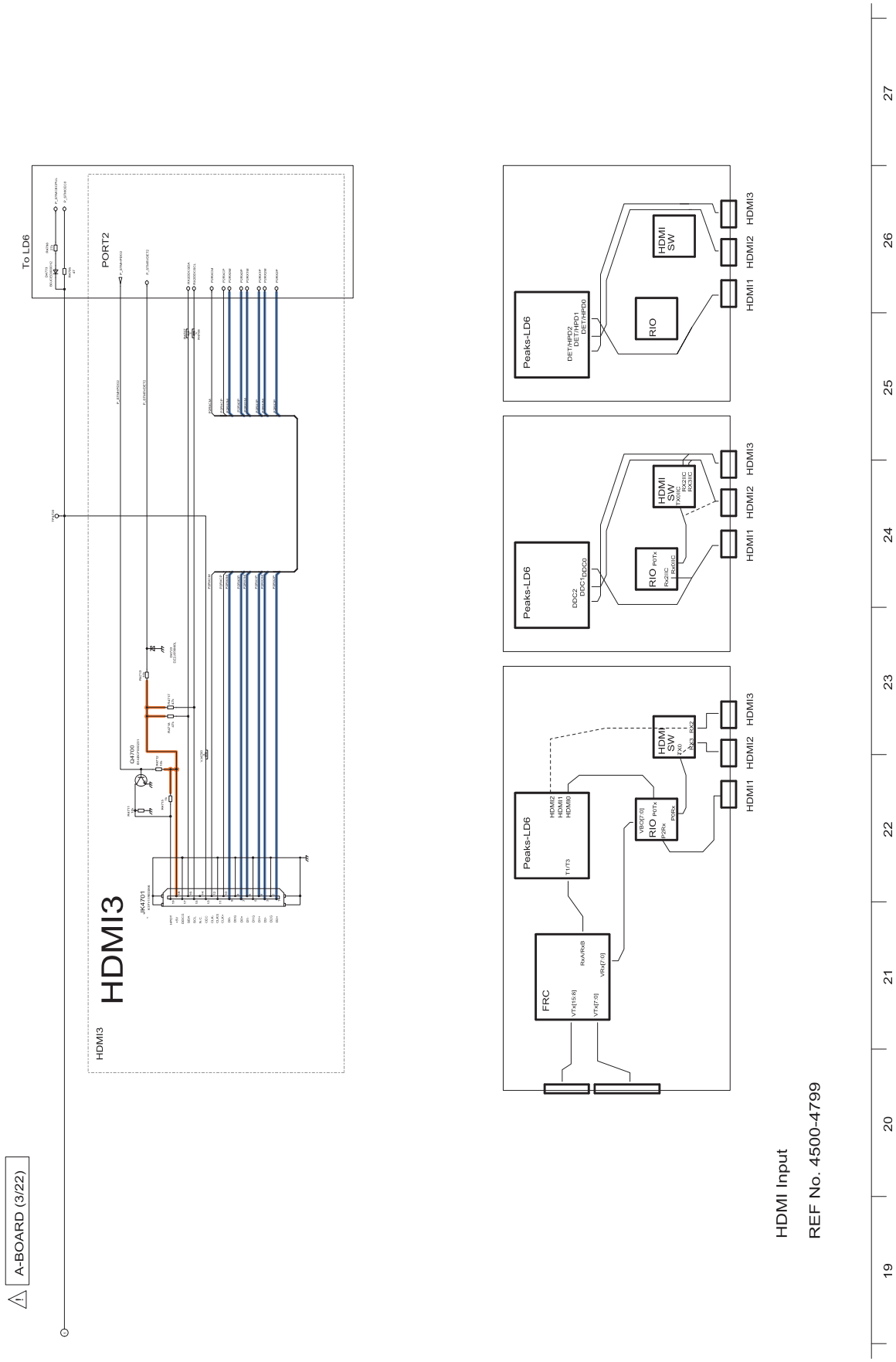
A-BOARD (3/22)
To LD6
PORT2
HDMI3
HDMI3
JK4701
Q4700
Peaks-LD6
FRC
RIO
HDMI SW
HDMI1
HDMI2
HDMI3
HDMI Input
REF No. 4500-4799
19
20
21
22
23
24
25
26
27

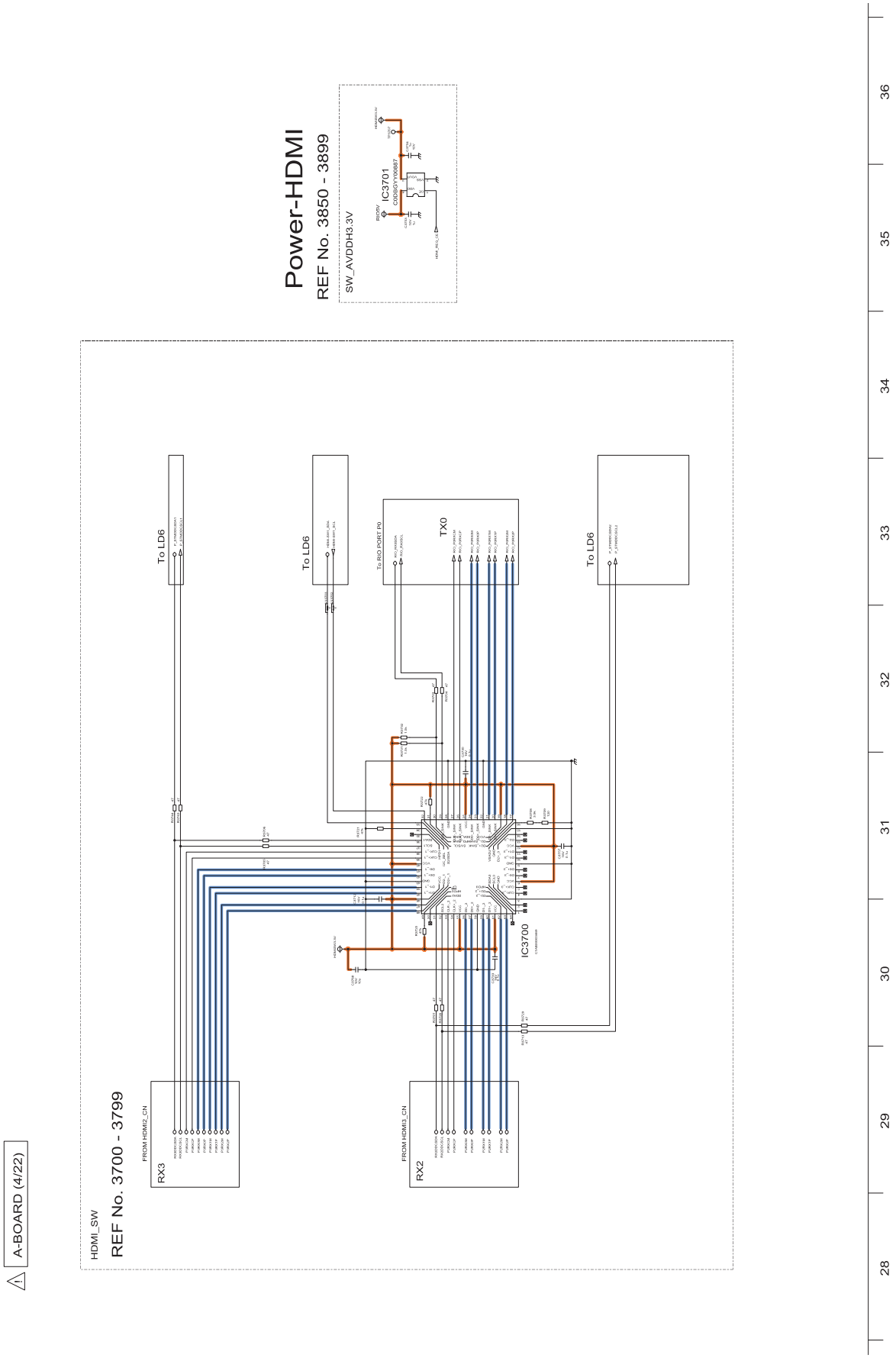
A-BOARD (4/22)
HDMI_SW
REF No. 3700 - 3799
RX3
FROM HDMI2_CN
RX2
FROM HDMI3_CN
IC3700
TX0
To RIO PORT P0
To LD6
To LD6
To LD6
Power-HDMI
REF No. 3850 - 3899
SW_AVDDH3.3V
IC3701
28
29
30
31
32
33
34
35
36

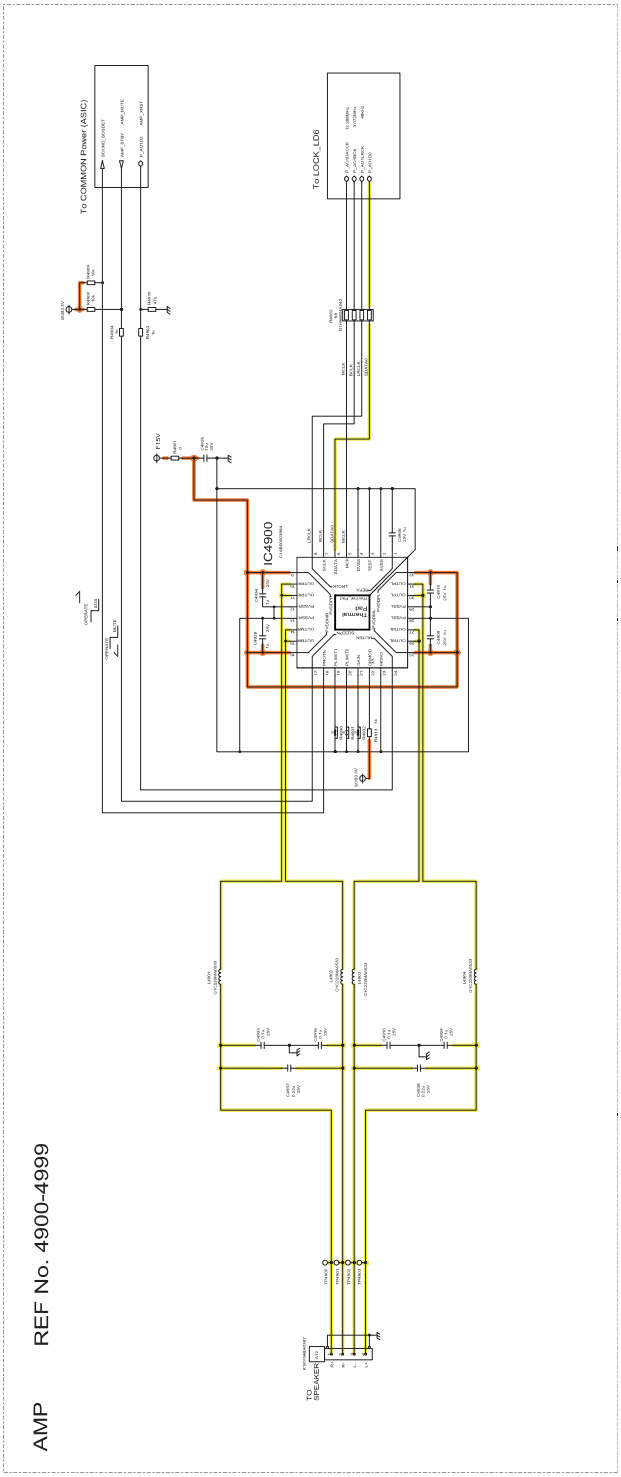

A-BOARD (5/22)

45 44 43 42 41 40 39 38 37

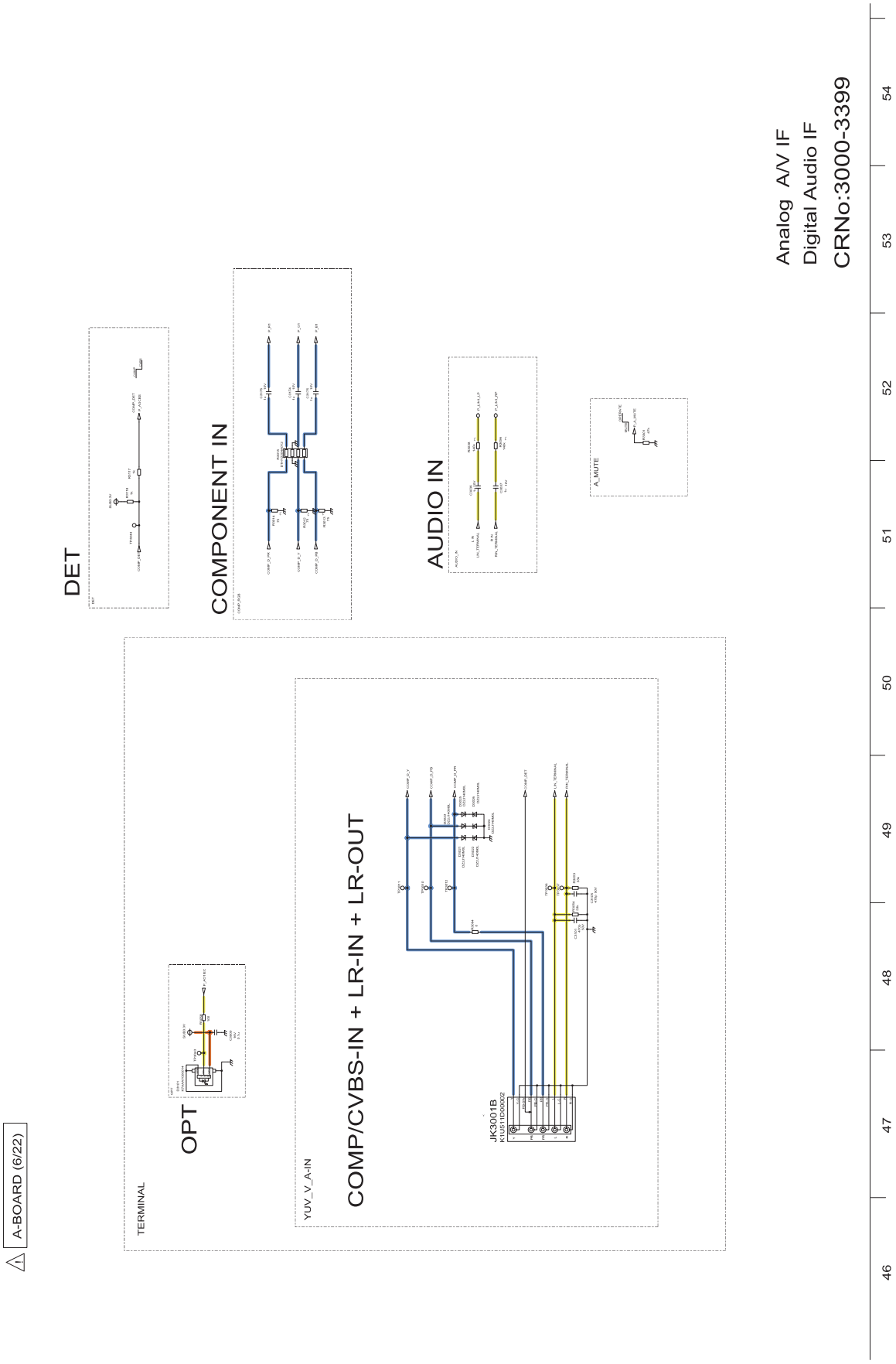
A-BOARD (6/22)
TERMINAL
OPT
YUV_V_A-IN
COMP/CVBS-IN + LR-IN + LR-OUT
JK3001B
K1JF11D0000J2
COMP_DET
COMP_Y
COMP_U_PB
COMP_V_PR
CVBS_IN
AUDIO_IN
A_MUTE
DET
COMPONENT IN
AUDIO IN
Analog A/V IF
Digital Audio IF
CRNo:3000-3399
46
47
48
49
50
51
52
53
54

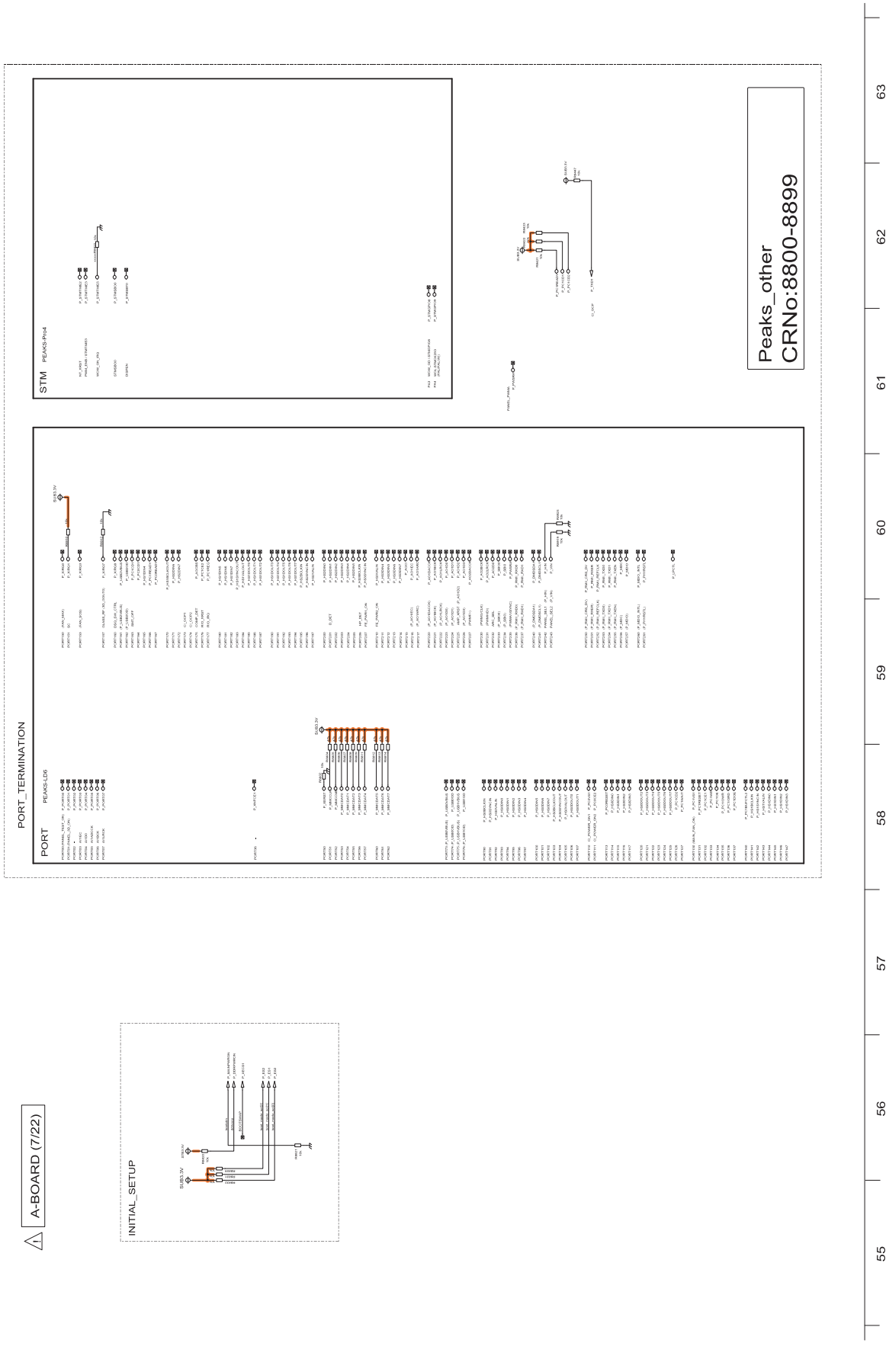
A-BOARD (7/22)
INITIAL_SETUP
PORT_TERMINATION
PORT
STM
Peaks_other
CRNo:8800-8899
55
56
57
58
59
60
61
62
63

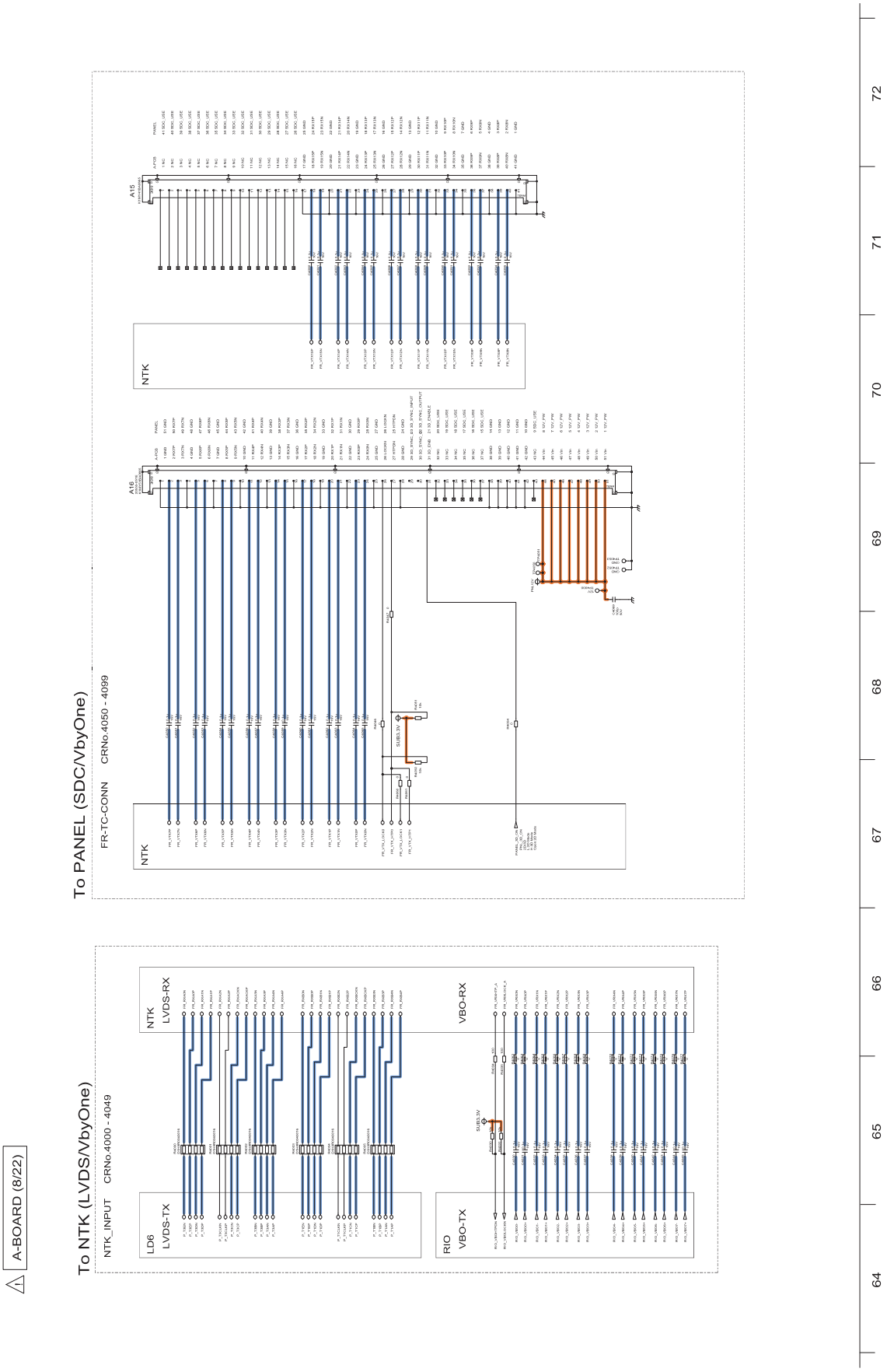
A-BOARD (8/22)
To NTK (LVDS/VbyOne)
NTK_INPUT CRNo.4000 - 4049
LD6
LVDS-TX
NTK
LVDS-RX
RIO
VBO-TX
VBO-RX
To PANEL (SDC/VbyOne)
FR-TC-CONN CRNo.4050 - 4099
NTK
A16
A15
64
65
66
67
68
69
70
71
72

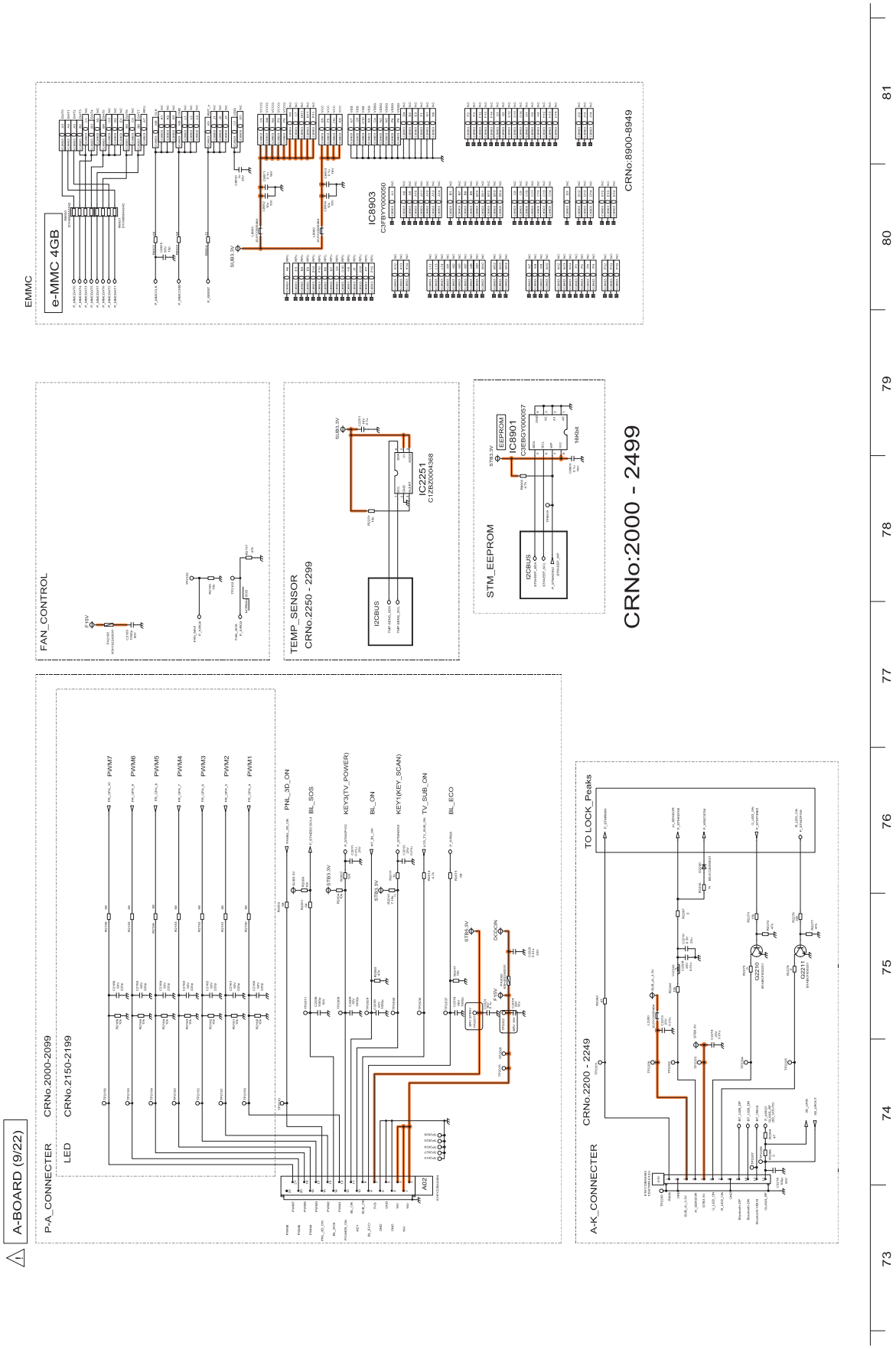
A-BOARD (9/22)
P-A_CONNECTER CRNo.2000-2099
LED CRNo.2150-2199
A-K_CONNECTER CRNo.2200 - 2249
TO LOCK_Peaks
FAN_CONTROL
TEMP_SENSOR
CRNo.2250 - 2299
STM_EEPROM
CRNo:2000 - 2499
EMMC
e-MMC 4GB
IC8903
C3FBYY000050
CRNo:8900-8949
IC8901
C3EBGY000057
IC2251
C1ZZZ0004368
I2CBUS
PWM7
PWM6
PWM5
PWM4
PWM3
PWM2
PWM1
PNL_3D_ON
BL_SOS
KEY3(TV_POWER)
BL_ON
KEY1(KEY_SCAN)
TV_SUB_ON
BL_ECO
Q2210
Q2211
81
80
79
78
77
76
75
74
73

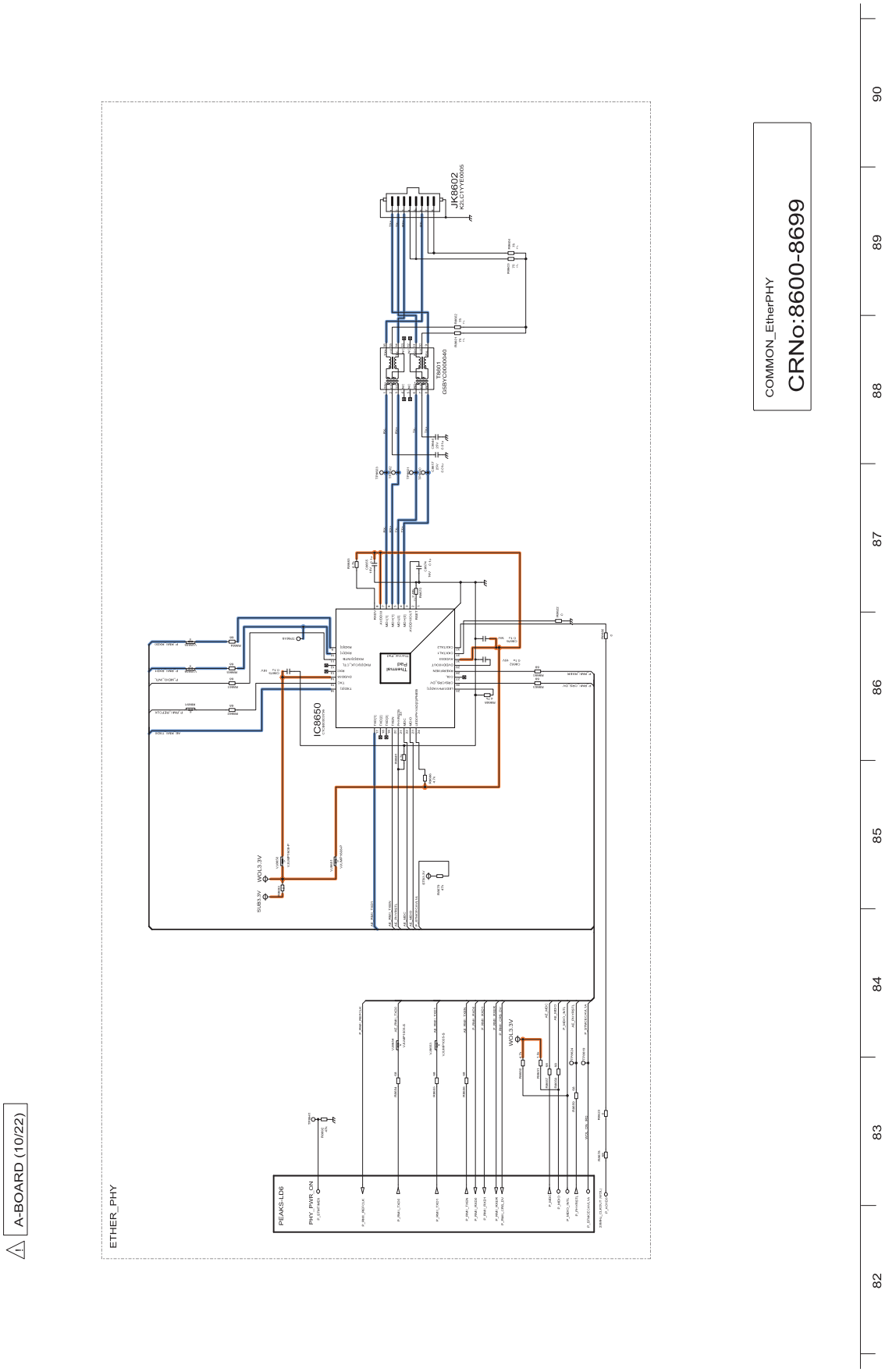
A-BOARD (10/22)
ETHER_PHY
PEAKS-LD6
PHY PWR_ON
IC8650
Thermal Pad
JK8602
TR601
GSBYC000040
VCC3.3V
SUB3.3V
COMMON_EtherPHY
CRNo:8600-8699
82
83
84
85
86
87
88
89
90

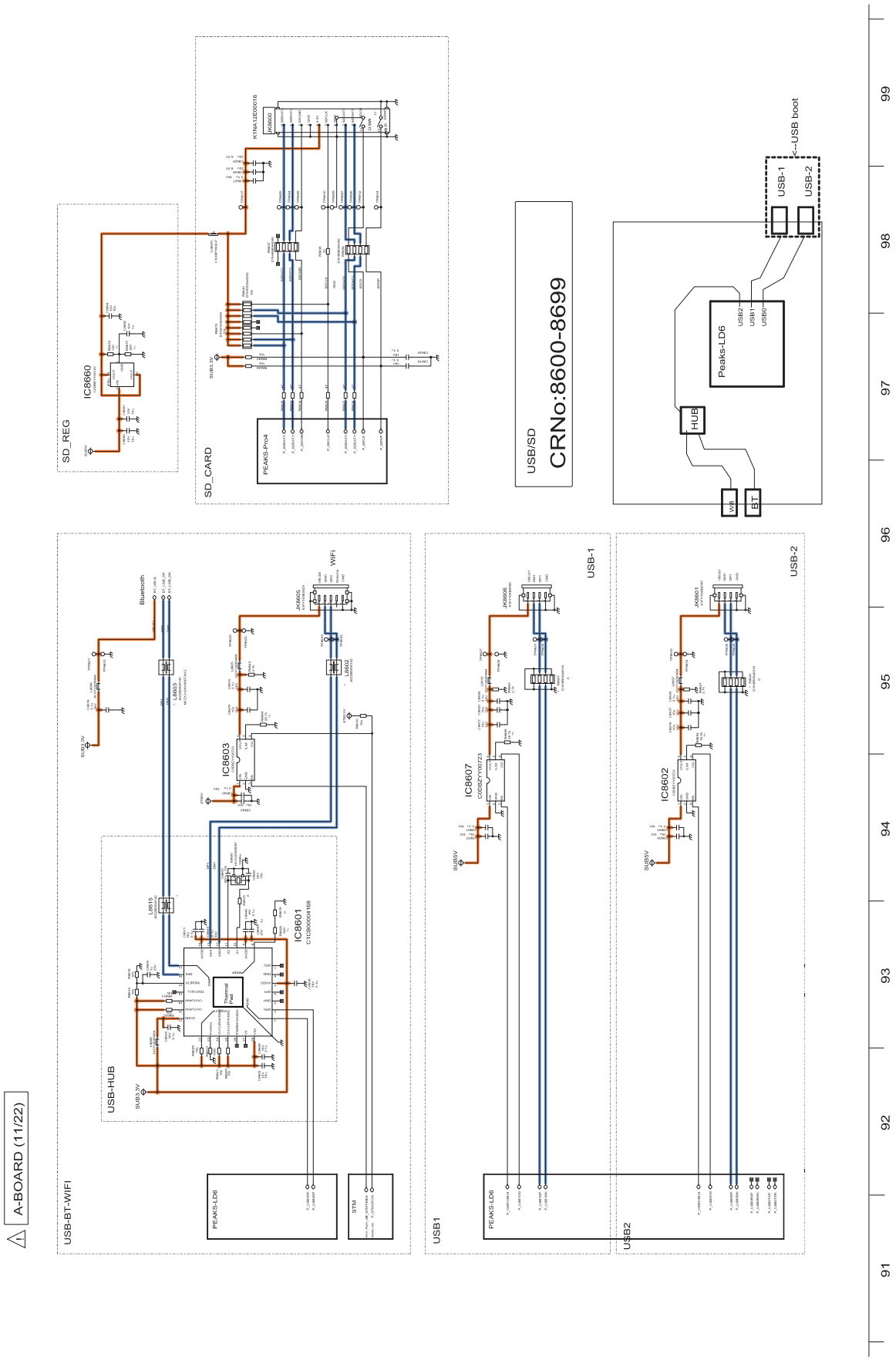
A-BOARD (11/22)
SD_REG
IC8660
SD_CARD
PEAKS-Pro4
JK8600
USB/SD
CRNo:8600-8699
USB boot
USB-1
USB-2
Peaks-LD6
HUB
WIF
BT
USB-BT-WIFI
Bluetooth
WIFI
USB-HUB
IC8603
IC8601
C1C3B0004168
PEAKS-LD6
STM
USB1
IC8607
C0DBZY00723
JK8606
USB-1
USB2
IC8602
JK8601
USB-2
91
92
93
94
95
96
97
98
99

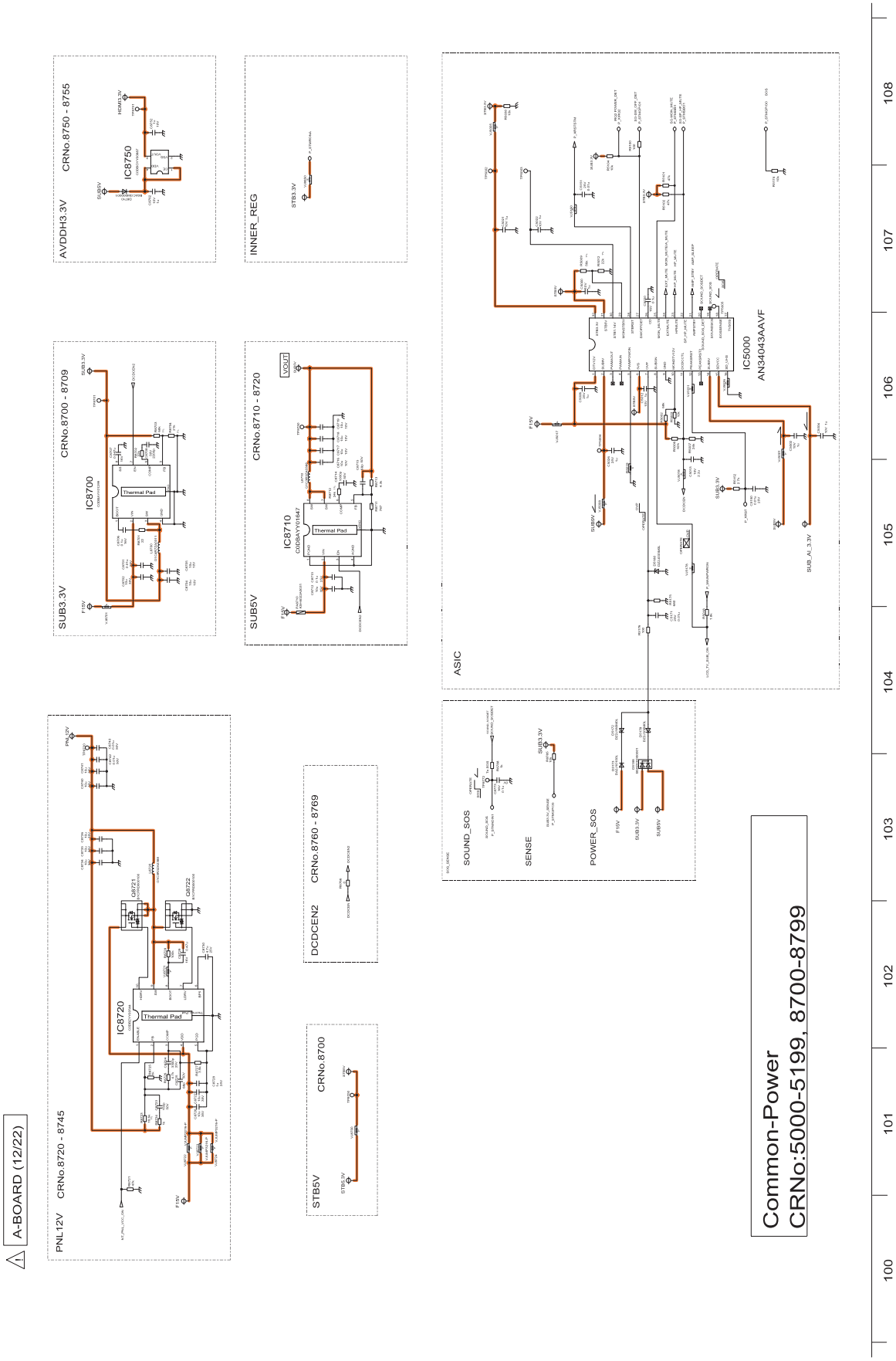
A-BOARD (12/22)
PNL12V CRNo.8720 - 8745
IC8720
Thermal Pad
Q8721
Q8722
STB5V CRNo.8700
DCDCEN2 CRNo.8760 - 8769
SUB3.3V CRNo.8700 - 8709
IC8700
Thermal Pad
SUB5V CRNo.8710 - 8720
IC8710
Thermal Pad
AVDDH3.3V CRNo.8750 - 8755
IC8750
INNER_REG
ASIC
IC5000
AN34043AAVF
SOUND_SOS
SENSE
POWER_SOS
Common-Power
CRNo:5000-5199, 8700-8799
100
101
102
103
104
105
106
107
108

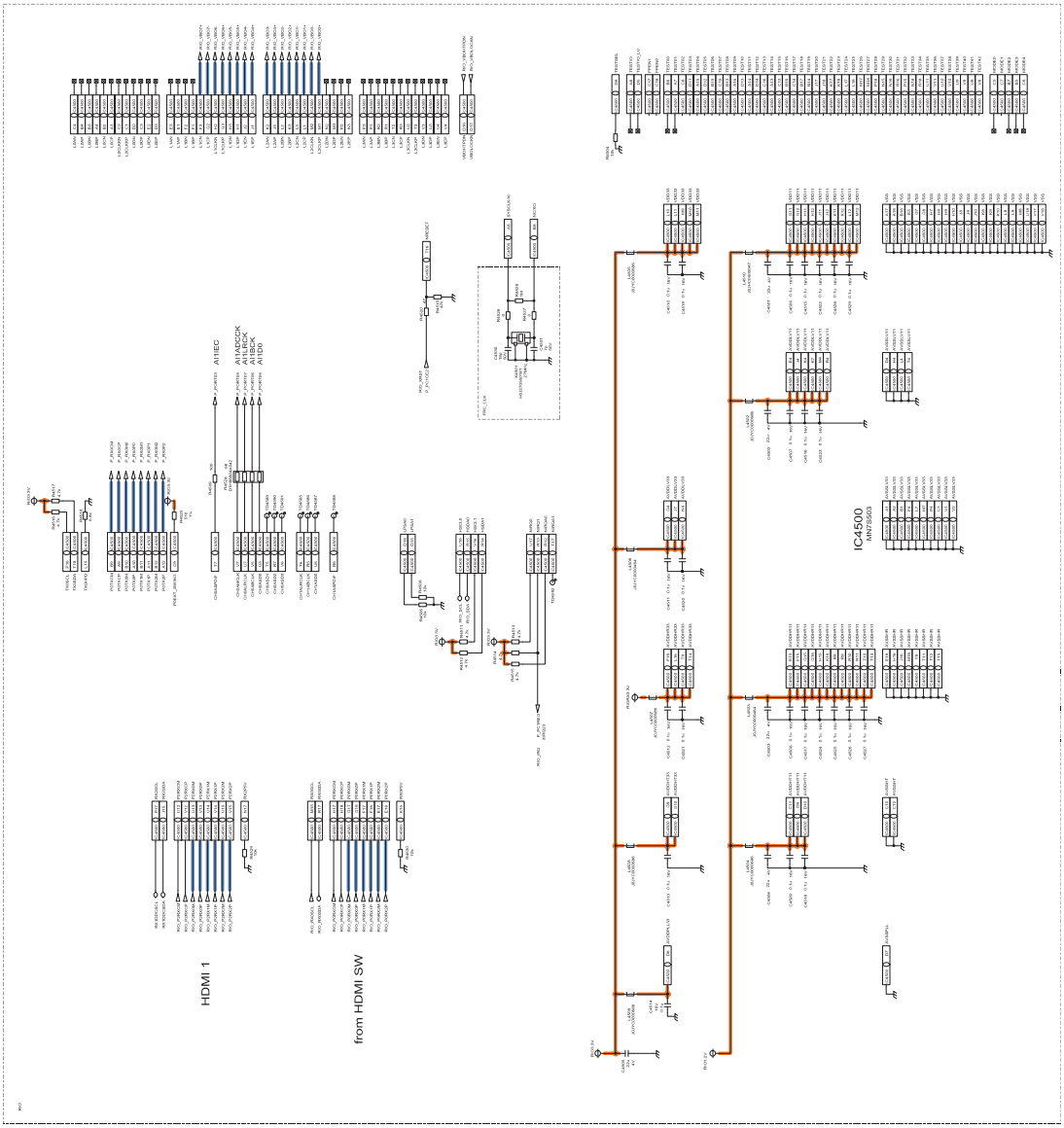

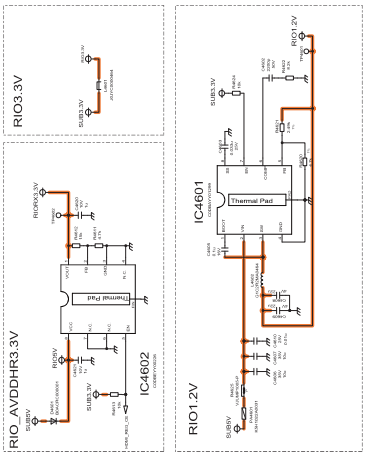

A-BOARD (13/22)

109 110 111 112 113 114 115 116 117

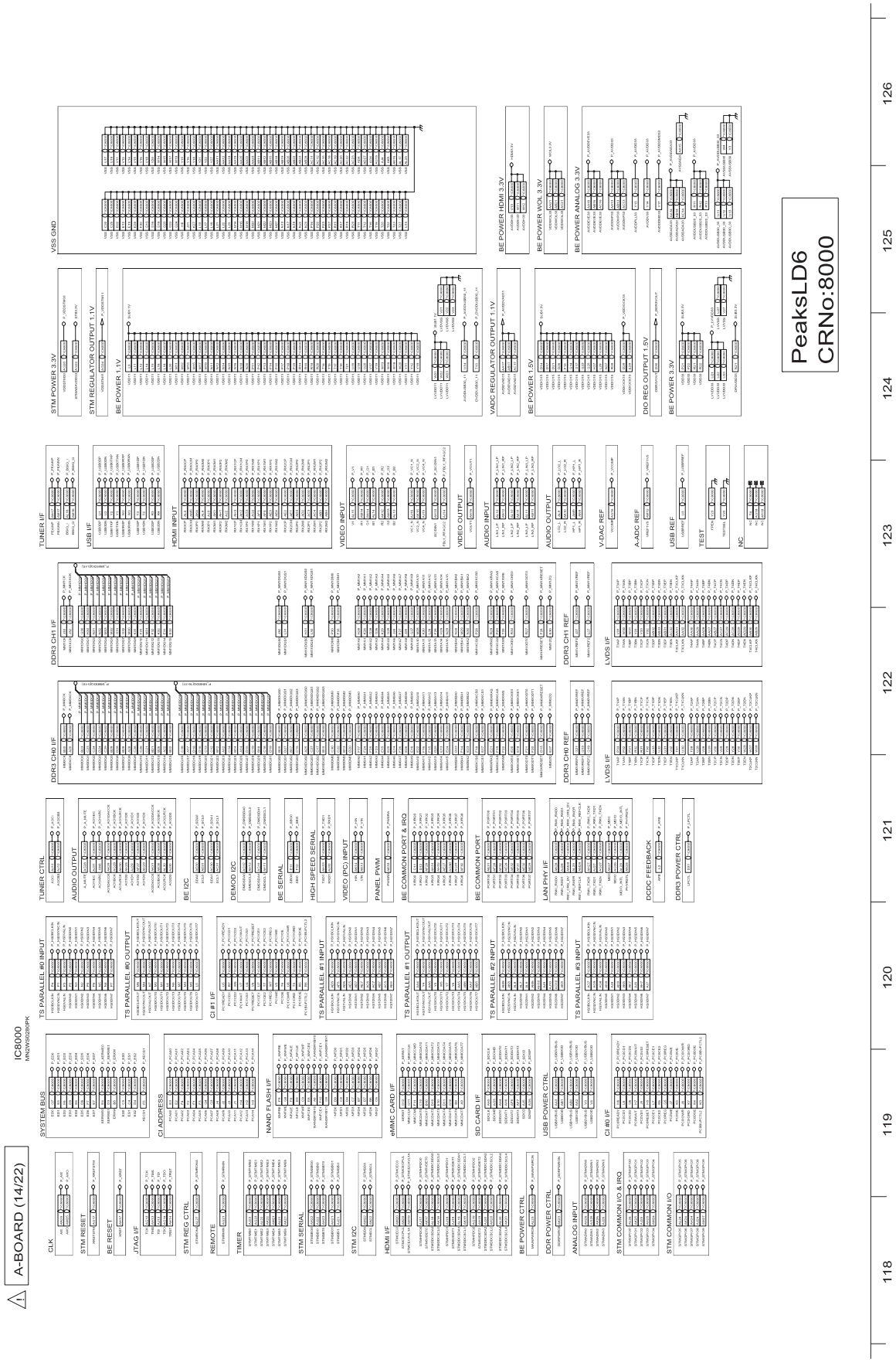
A-BOARD (14/22)
IC8000
MN2WS0280PK
CLK
STM RESET
BE RESET
JTAG I/F
STM REG CTRL
REMOTE
TIMER
STM SERIAL
STM I2C
HDMI I/F
DDR CTRL
ANALOG INPUT
STM COMMON I/O
SYSTEM BUS
CI ADDRESS
NAND FLASH I/F
eMMC CARD I/F
SD CARD I/F
BE POWER CTRL
CI #0 I/F
TS PARALLEL #0 INPUT
TS PARALLEL #0 OUTPUT
CI #1 I/F
TS PARALLEL #1 INPUT
TS PARALLEL #1 OUTPUT
TS PARALLEL #2 INPUT
TS PARALLEL #3 INPUT
TUNER CTRL
AUDIO OUTPUT
BE I2C
DEMOD I2C
BE SERIAL
HIGH SPEED SERIAL
VIDEO (PC) INPUT
PANEL PWM
BE COMMON PORT & IRQ
BE COMMON PORT
LAN PHY I/F
DCDC FEEDBACK
DDR3 POWER CTRL
DDR3 CH0 I/F
DDR3 CH1 I/F
DDR3 CH0 REF
DDR3 CH1 REF
LVDS I/F
TUNER I/F
USB I/F
HDMI INPUT
VIDEO INPUT
VIDEO OUTPUT
AUDIO INPUT
AUDIO OUTPUT
V-DAC REF
A-ADC REF
USB REF
TEST
NC
STM POWER 3.3V
STM REGULATOR OUTPUT 1.1V
BE POWER 1.1V
VADC REGULATOR OUTPUT 1.1V
BE POWER 1.5V
DIO REG OUTPUT 1.5V
BE POWER 3.3V
VSS GND
BE POWER HDMI 3.3V
BE POWER WOL 3.3V
BE POWER ANALOG 3.3V
PeaksLD6
CRNo:8000
118
119
120
121
122
123
124
125
126

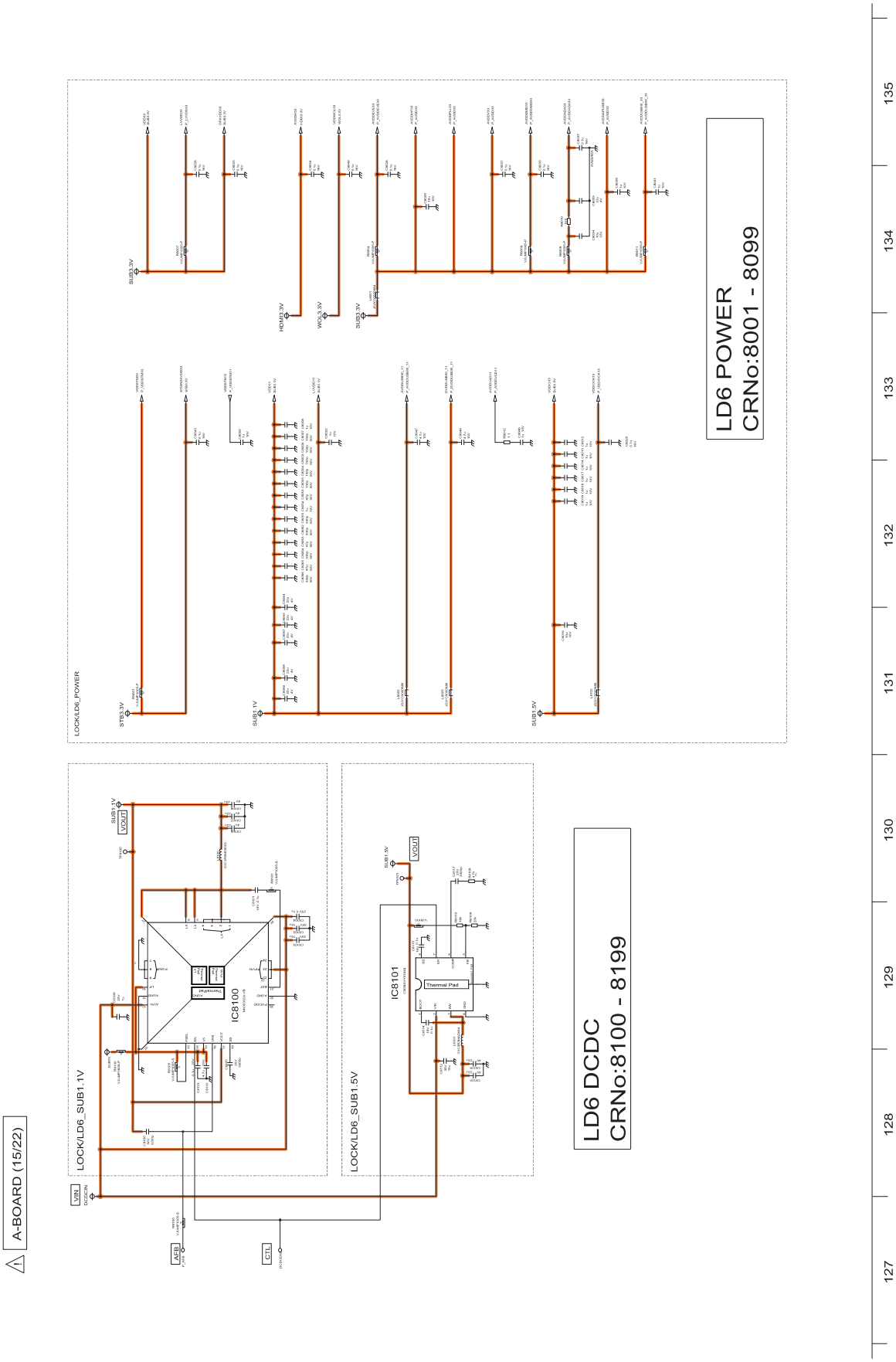
A-BOARD (15/22)
LOCK/LD6_SUB1.1V
LOCK/LD6_SUB1.5V
LOCK/LD6_POWER
IC8100
IC8101
Thermal Pad
LD6 DCDC
CRNo:8100 - 8199
LD6 POWER
CRNo:8001 - 8099
127
128
129
130
131
132
133
134
135

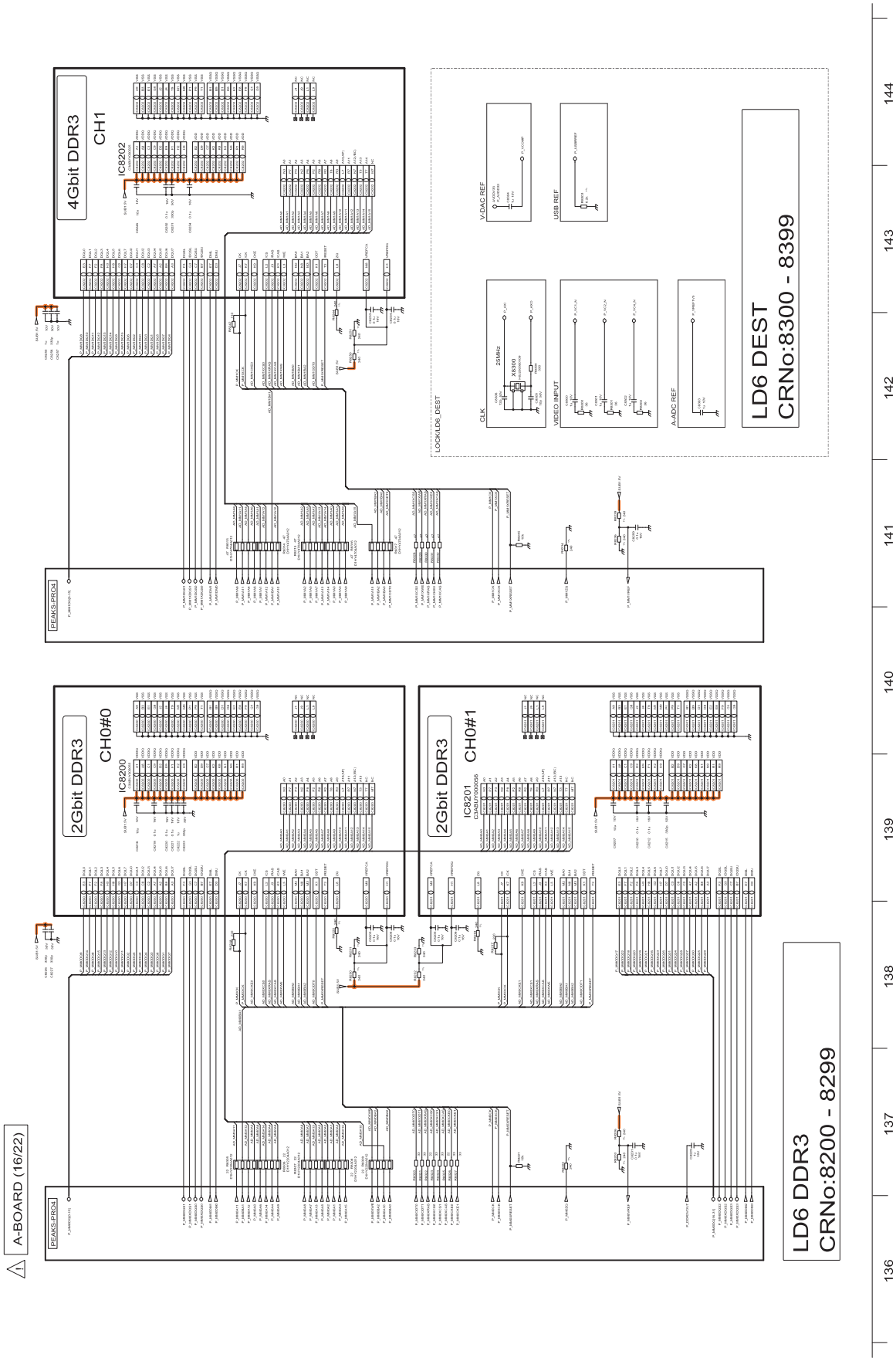
A-BOARD (16/22)
4Gbit DDR3
CH1
IC8202
2Gbit DDR3
CH0#0
IC8200
2Gbit DDR3
CH0#1
IC8201
PEAKS-PRO4
LOCK/LD6_DEST
CLK
25MHz
AS300
V.DAC REF
USB REF
VIDEO INPUT
A-ADC REF
LD6 DEST
CRNo:8300 - 8399
LD6 DDR3
CRNo:8200 - 8299
136
137
138
139
140
141
142
143
144

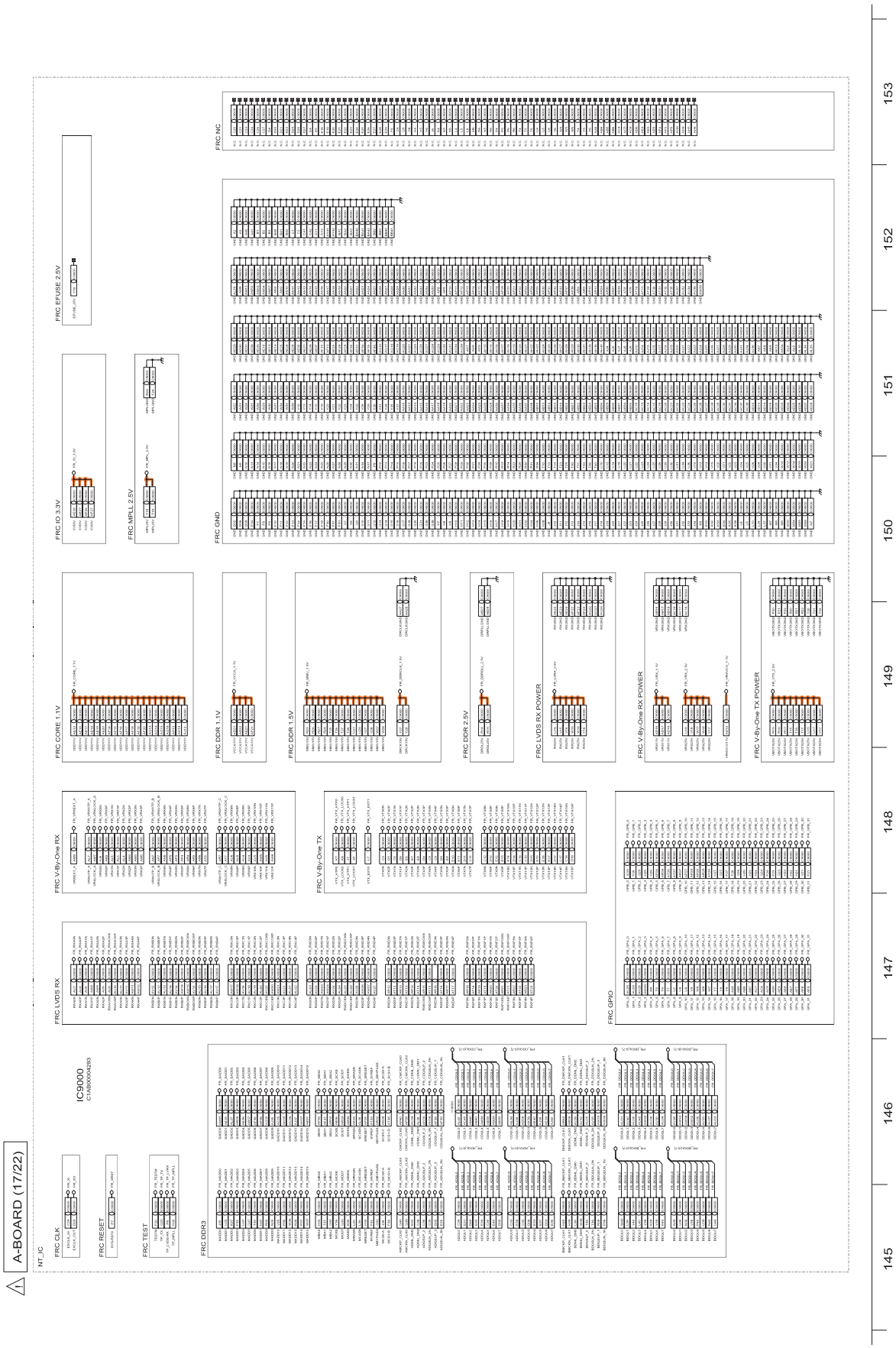
A-BOARD (17/22)
NT_IC
FRC CLK
FRC RESET
FRC TEST
IC9000
CYV8D0004G83
FRC DDR3
FRC LVDS RX
FRC V-By-One RX
FRC V-By-One TX
FRC GPIO
FRC CORE 1.1V
FRC DDR 1.1V
FRC DDR 1.5V
FRC DDR 2.5V
FRC LVDS RX POWER
FRC V-By-One RX POWER
FRC V-By-One TX POWER
FRC IO 3.3V
FRC MPLL 2.5V
FRC EFUSE 2.5V
FRC GND
FRC NC
145
146
147
148
149
150
151
152
153

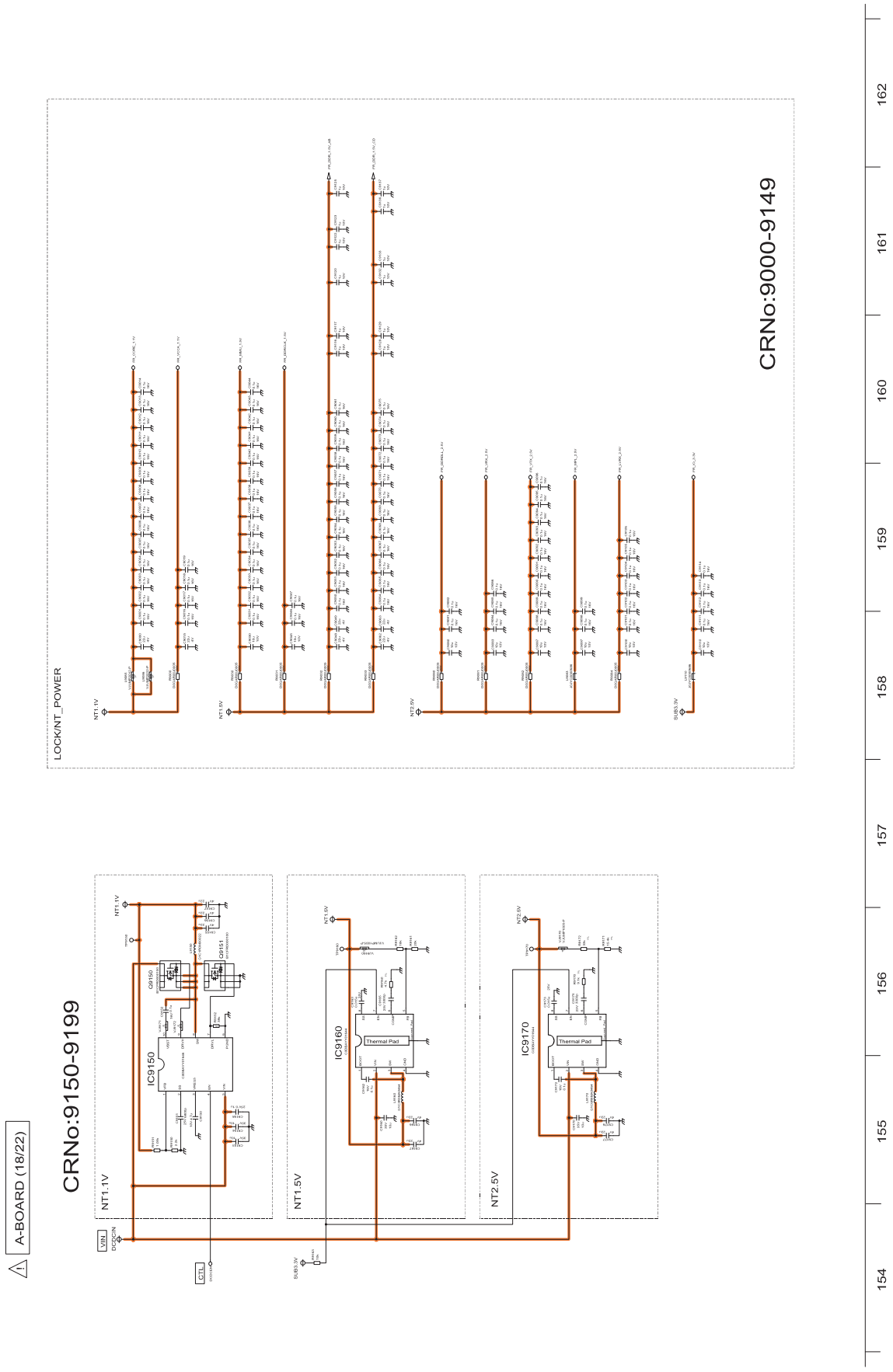
A-BOARD (18/22)
CRNo:9150-9199
NT1.1V
NT1.5V
NT2.5V
IC9150
IC9160
IC9170
Thermal Pad
VIN
CTL
LOCK/NT_POWER
CRNo:9000-9149
154
155
156
157
158
159
160
161
162

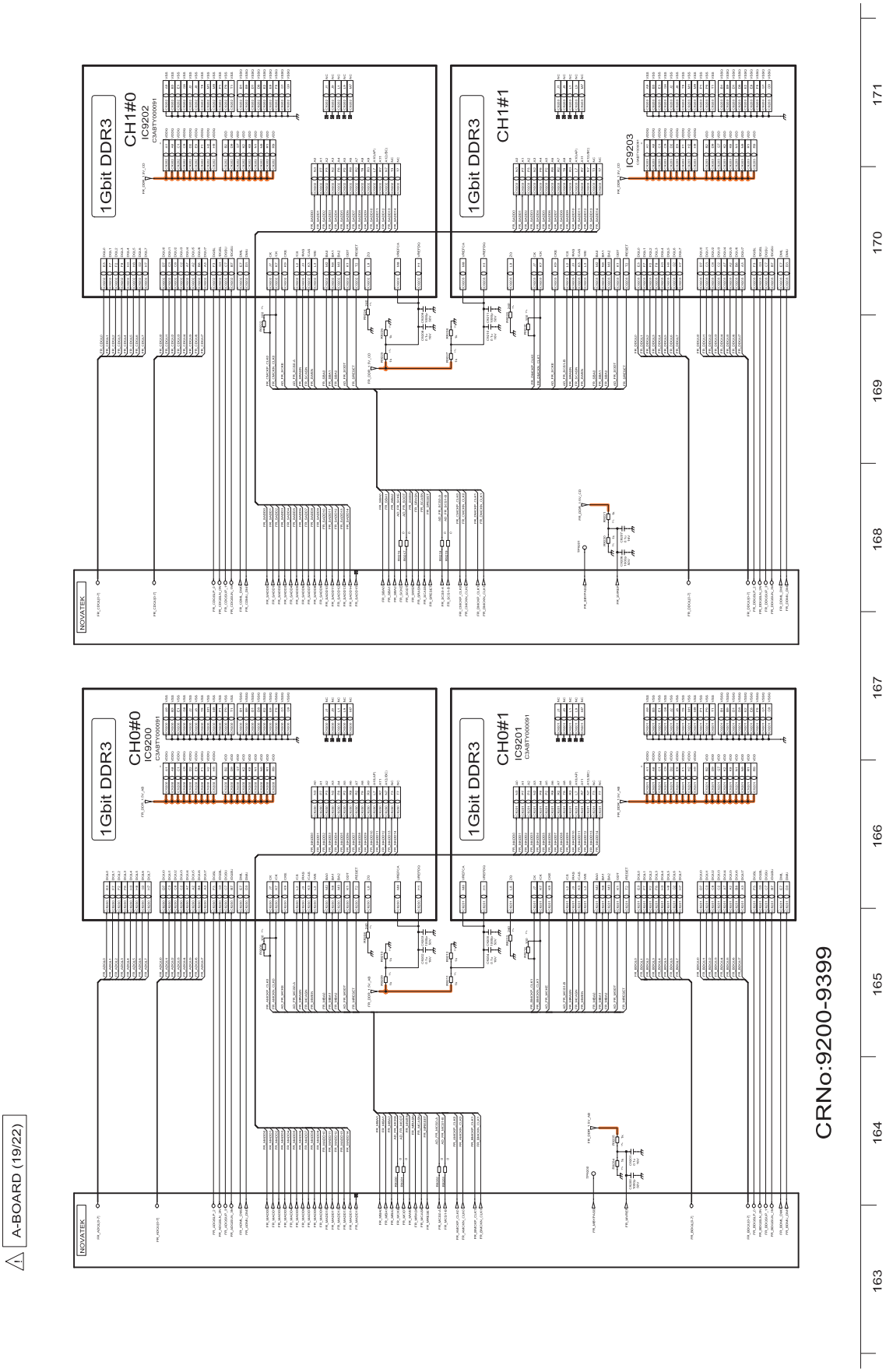
A-BOARD (19/22)
1Gbit DDR3
CH1#0
IC9202
1Gbit DDR3
CH1#1
IC9203
1Gbit DDR3
CH0#0
IC9200
1Gbit DDR3
CH0#1
IC9201
NOVATEK
NOVATEK
CRNo:9200-9399
163
164
165
166
167
168
169
170
171

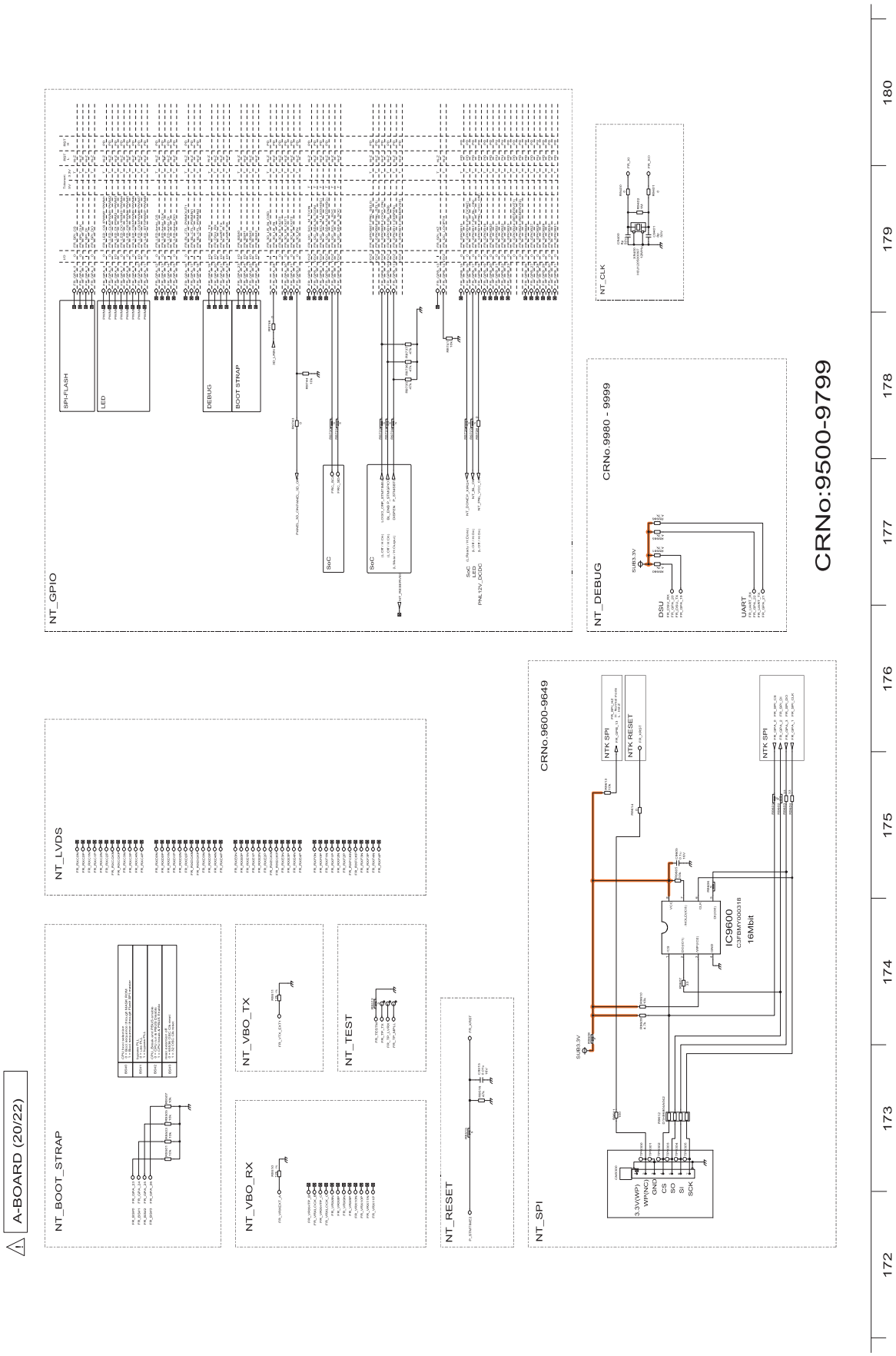
A-BOARD (20/22)
NT_BOOT_STRAP
NT_LVDS
NT_GPIO
NT_VBO_TX
NT_VBO_RX
NT_TEST
NT_RESET
NT_SPI
NT_DEBUG
NT_CLK
SPI-FLASH
LED
DEBUG
BOOT STRAP
SoC
CRNo:9600-9649
CRNo:9980 - 9999
CRNo:9500-9799
IC9600
C3FBMY000318
16Mbit
NTK SPI
NTK RESET
DSU
UART
172
173
174
175
176
177
178
179
180

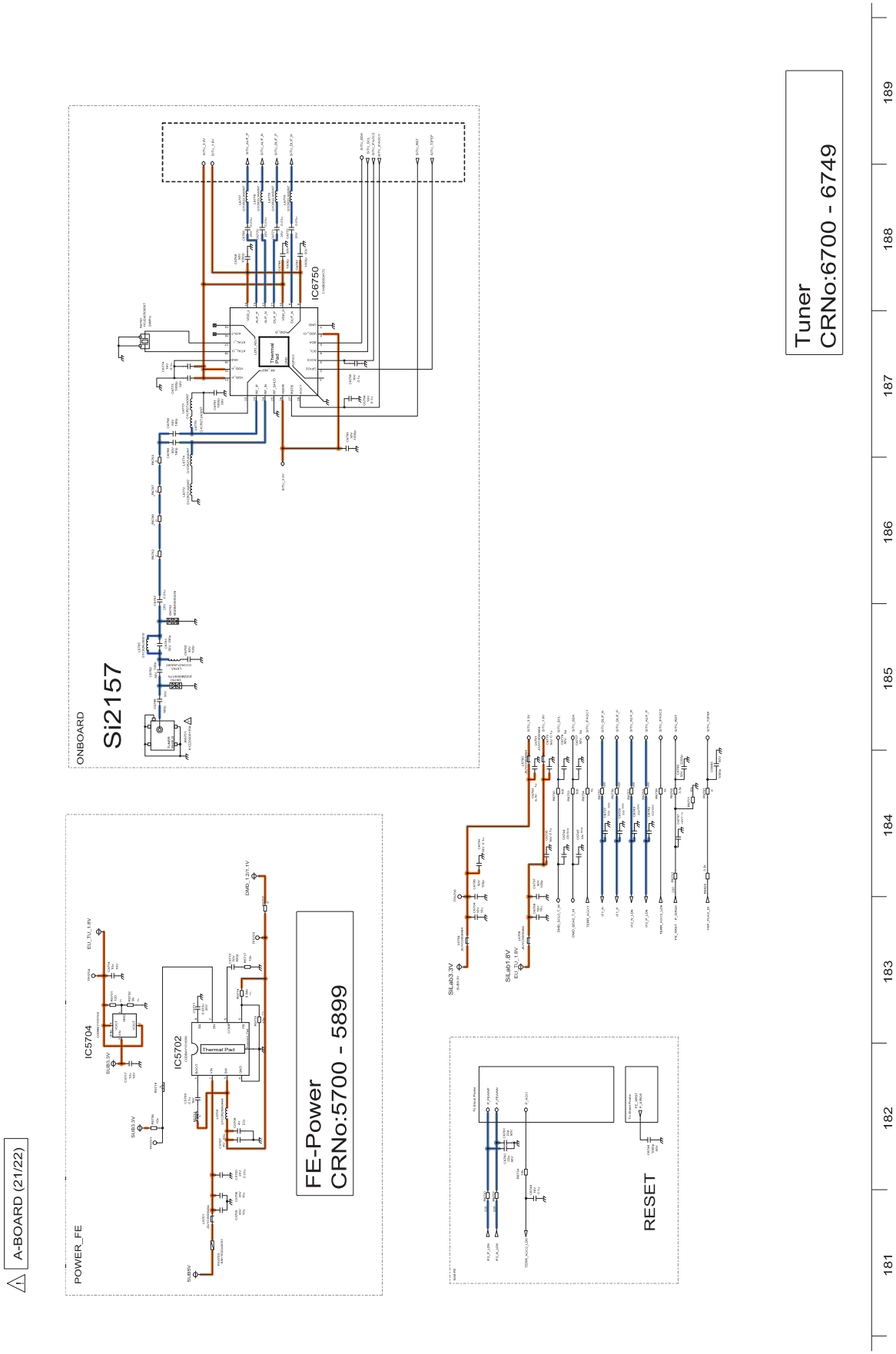
A-BOARD (21/22)
ONBOARD
Si2157
IC6750
Thermal Pad
POWER_FE
IC5704
IC5702
Thermal Pad
FE-Power
CRNo:5700 - 5899
RESET
Tuner
CRNo:6700 - 6749
181
182
183
184
185
186
187
188
189

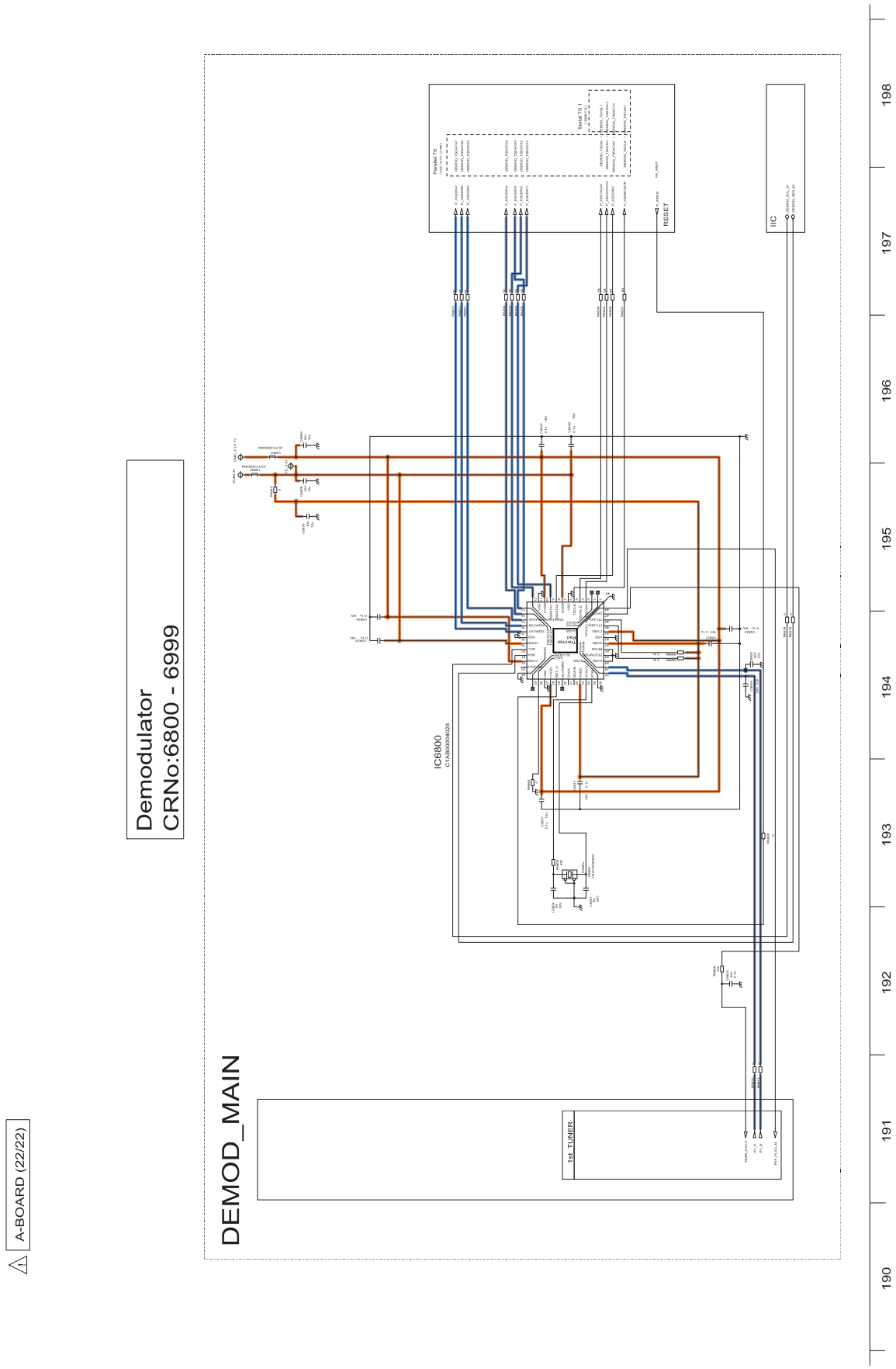
A-BOARD (22/22)
Demodulator
CRNo:6800 - 6999
DEMOD_MAIN
IC6800
1st_TUNER
Parallel TS
Serial TS 1
RESET
IIC
190
191
192
193
194
195
196
197
198

Model No. : TH-48AX670S GK-Board

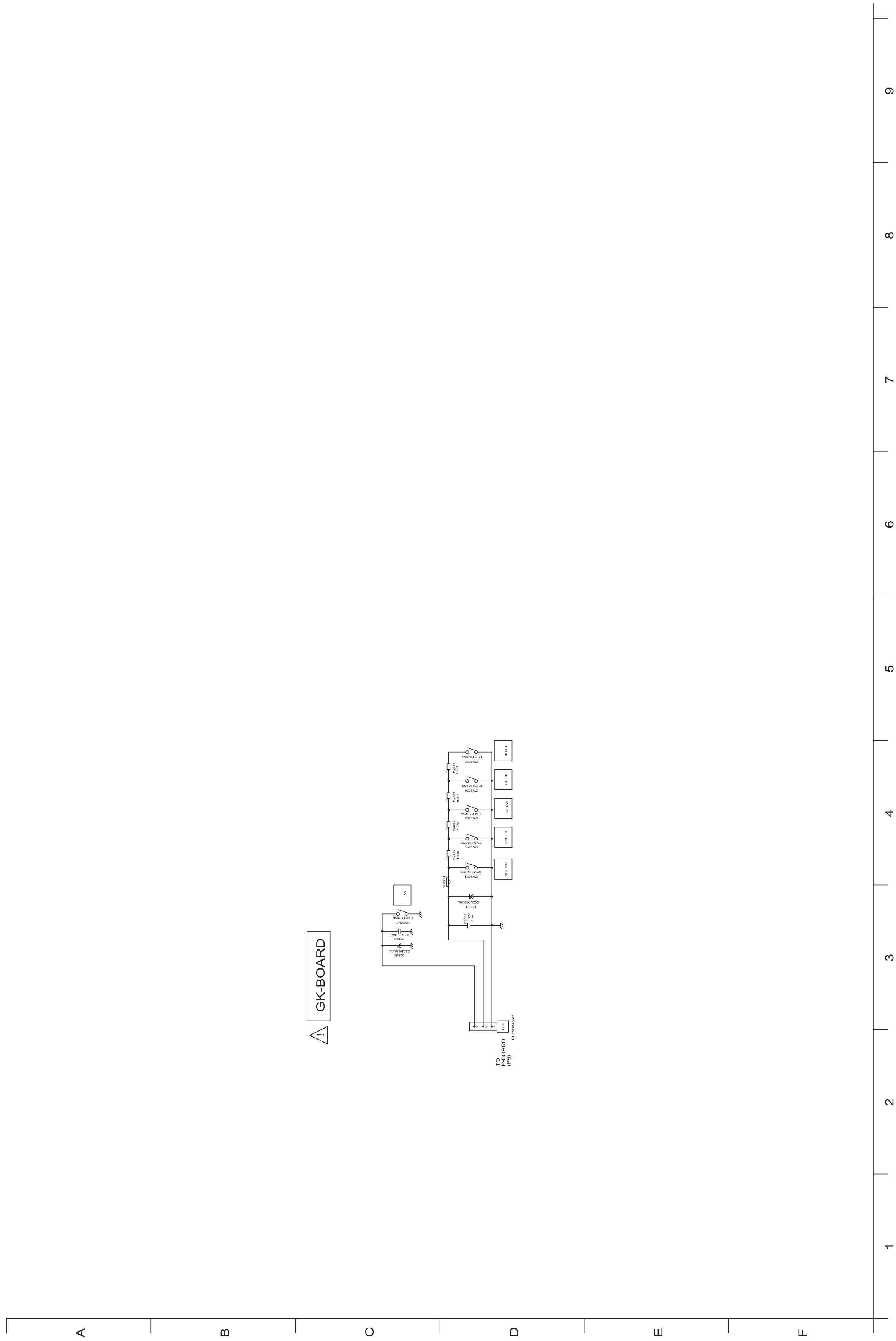

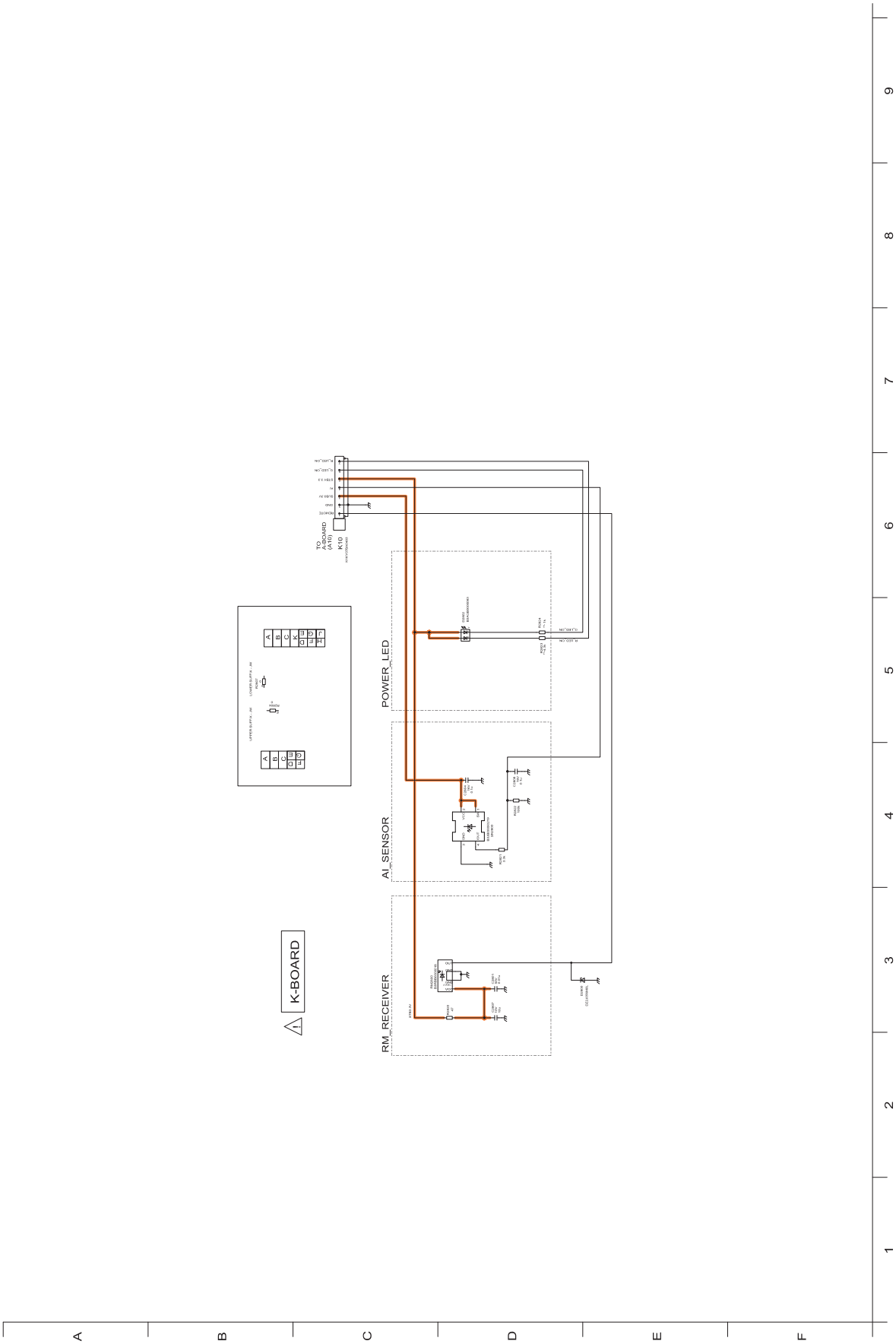
K-BOARD
RM_RECEIVER
AI_SENSOR
POWER_LED
TO
K-BOARD
(A10)
K10

Model No. : TH-48AX670S P-Board (1/3)

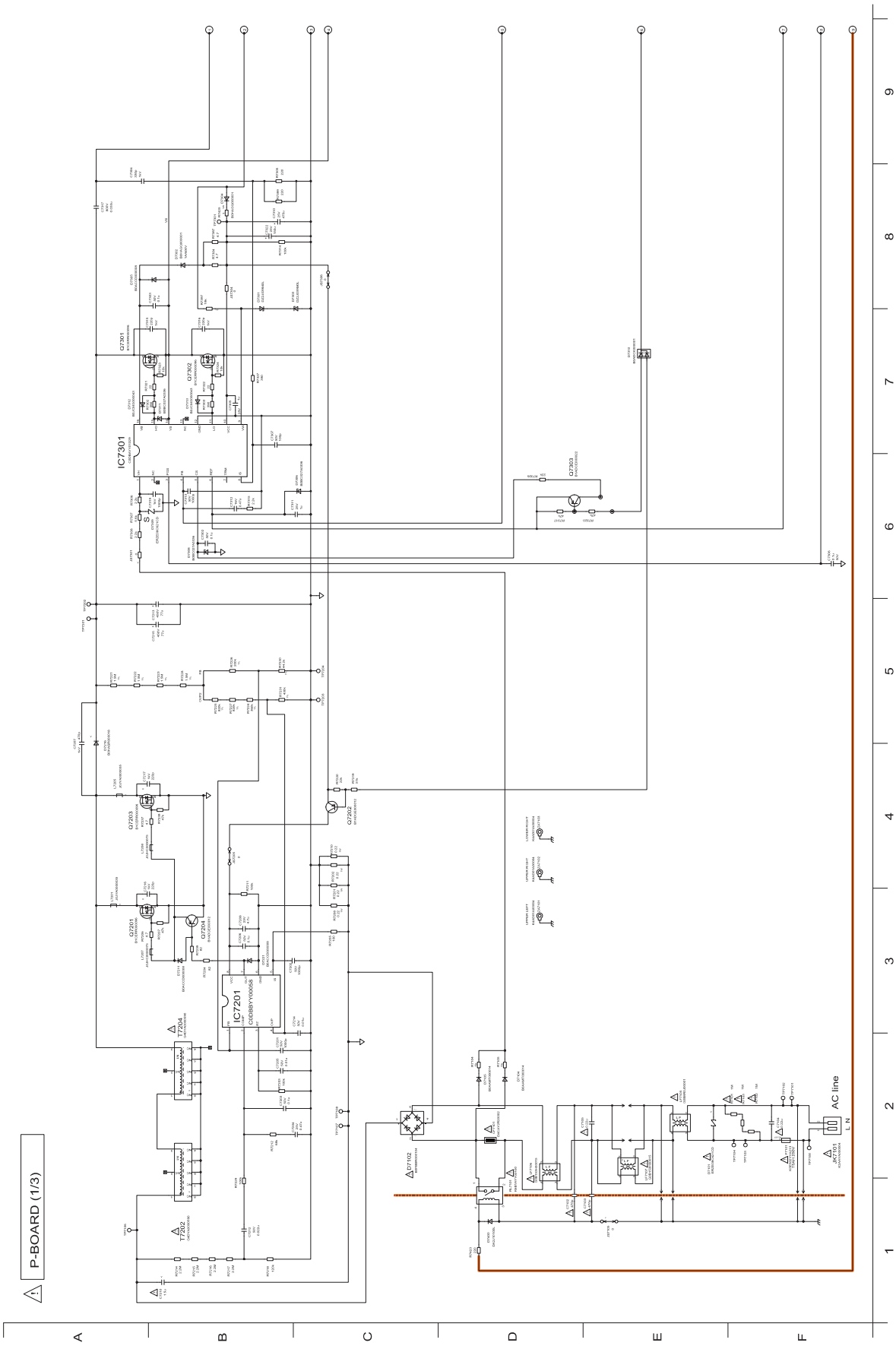

Model No. : TH-48AX670S P-Board (2/3)

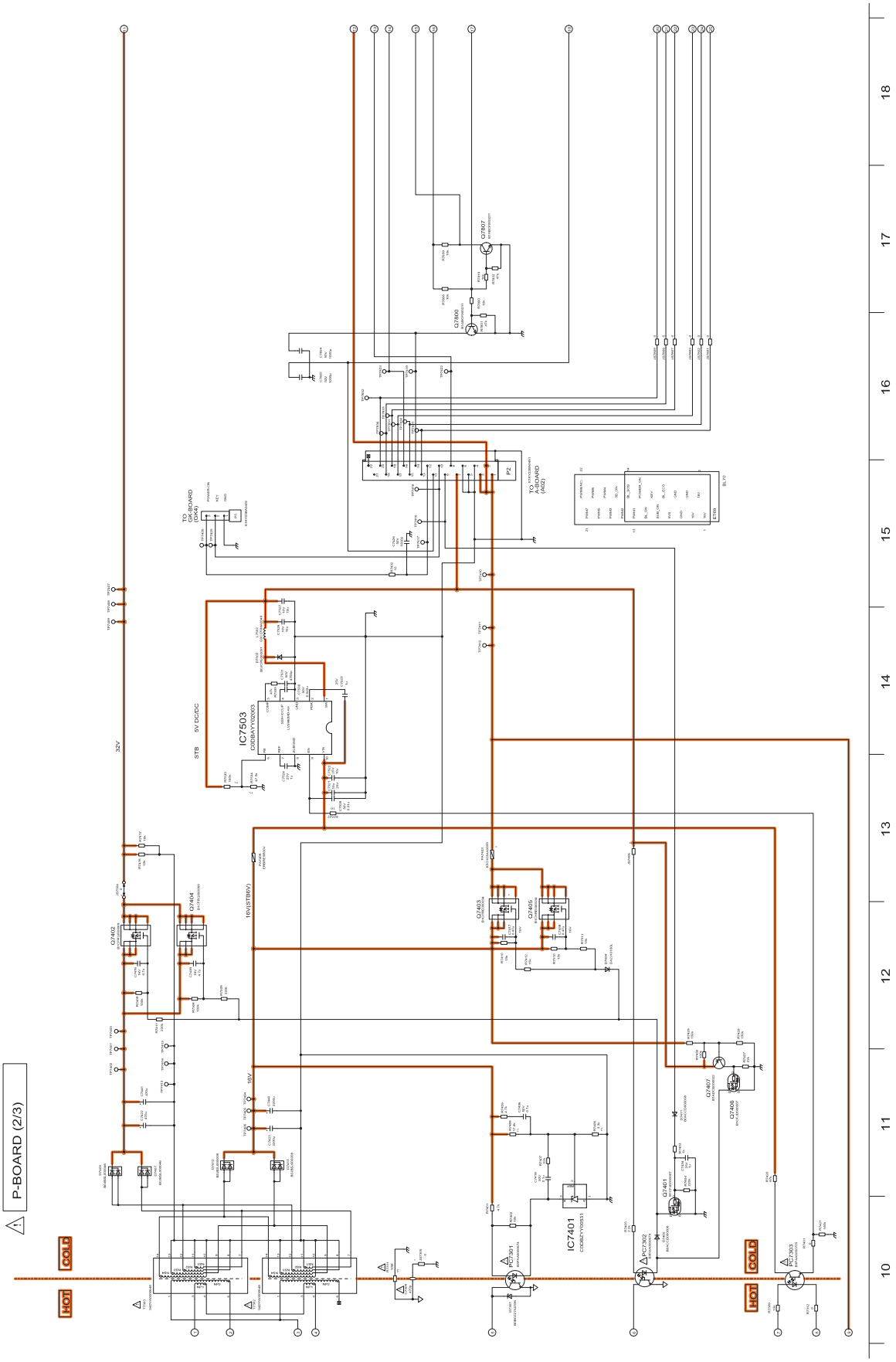

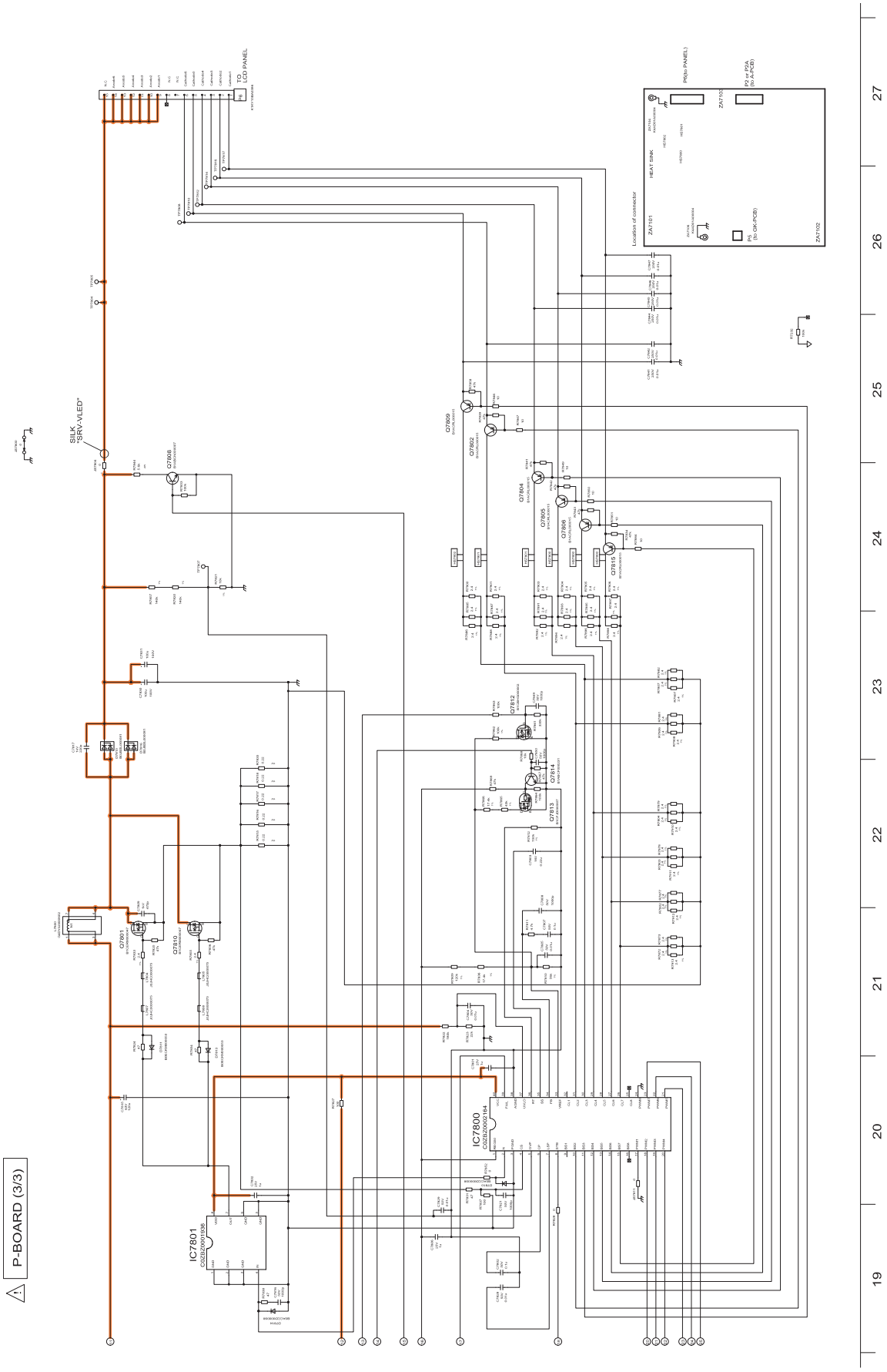
P-BOARD (3/3)
TO LCD PANEL
SILK "SRV-VLED"
IC7800
IC7801
Location of connector
HEAT SINK
ZA7101
ZA7102
ZA7105
P6(to PANEL)
P2 (to P2A (to A-PCB))
P5 (to GK-PCB)
Q7808
Q7809
Q7802
Q7804
Q7805
Q7806
Q7813
Q7812
Q7814
Q7811
Q7810
27
26
25
24
23
22
21
20
19

12 Printed Circuit Board

Model No. : TH-48AX670S A-Board (Top Component Side)

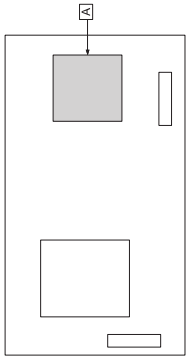

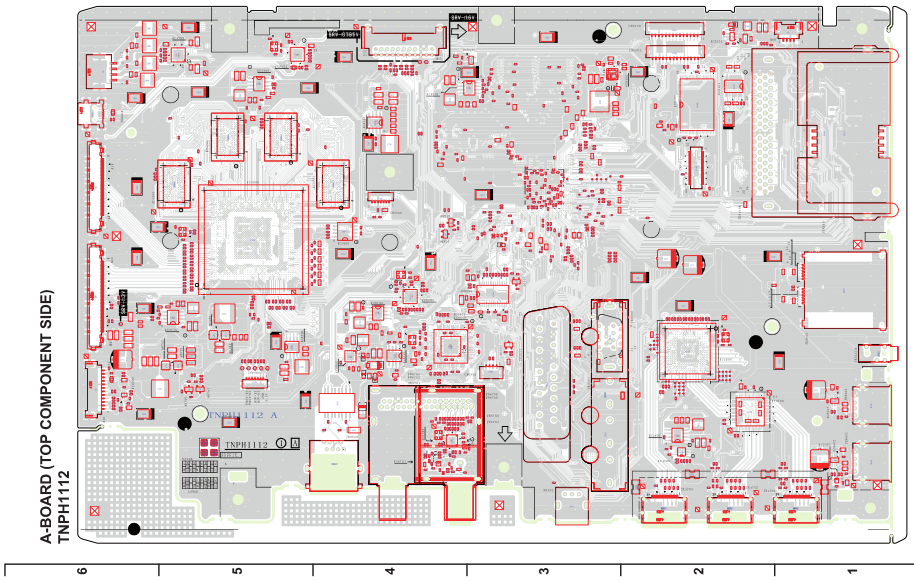

Parts Location

Ref.No	Location	Ref. No	Location	Ref. No	Location	Ref. No	Location	Ref. No	Location
IC2101	D2	IC8401	D2	D2016	D4	D4714	A1	D6752	A4
IC2200	B6	IC8601	D5	D2017	D4	D4715	A1	D6850	B4
IC2251	A1	IC8602	A1	D2100	D2	D4716	A1	D6851	B4
IC3700	B1	IC8607	A1	D2203	B6	D4717	A1	D6852	B4
IC4500	B2	IC8650	B4	D2202	B6	D4718	A1	D6853	B4
IC4601	A2	IC8700	B5	D2204	B6	D4719	A1	D8100	D3
IC4780	A2	IC8710	C4	D2230	C3	D4720	A1		
IC4900	D5	IC8900	C2	D3101	A3	D4721	A1		
IC5000	B3	IC9000	C5	D4700	A2	D4722	A1		
IC5701	B4	IC9160	D5	D4701	A2	D4753	A2		
IC5702	B4	IC9170	B5	D4702	A2	D4754	A2		
IC6750	A4	IC9200	C6	D4703	A2	D4755	A2		
IC6751	A4	IC9200A	C5	D4704	A2	D4756	A2		
IC6800	B4	IC9201	C5	D4705	A2	D4757	A2		
IC6801	B4	IC9202	C5	D4706	A2	D4758	A2		
IC6860	B4	IC9202A	C5	D4707	A2	D4759	A2		
IC8100	D2	IC9203	C4	D4708	A2	D4760	A2		
IC8101	D4	IC9203A	C4	D4709	A2	D6701	A4		
IC8110	D3	IC9600	C4	D4713	A1	D6750	A4		

Model No. : TH-48AX670S A-Board (Bottom Component Side)

Parts Location

Ref.No	Location	Ref. No	Location	Ref. No	Location
IC2100	A2	D2101	A1	D4712	D2
IC3052	C3	D2102	A1	D4723	D1
IC3701	C2	D2103	A2	D4724	D2
IC4602	C2	D2201	C6	D4750	D2
IC5700	C4	D3007	C3	D4751	D3
IC5703	C3	D3008	C3	D4752	D3
IC5704	C3	D3009	C3	D4761	D2
IC8000	B3	D3010	C3	D4773	B3
IC8200	A3	D3011	C3	D5172	B3
IC8201	A3	D3012	C3	D5173	B3
IC8202	B4	D3013	C3	D5178	C4
IC8400	A1	D3014	C3	D5180	C3
IC8550	B1	D3021	C3	D5182	C3
IC8603	A6	D3022	C3	D5188	B4
IC8660	B1	D3023	C3	D8700	A4
IC8712	B4	D3024	C3	D8710	B2
IC8720	C5	D3025	C3		
IC8750	B2	D3026	C3		
IC8901	A4	D3101	D3		
IC8902	A4	D3053	C3		
IC8903	A2	D4601	C2		
IC8903A	A2	D4602	D2		
IC8903B	A2	D4710	B3		
IC9150	C5	D4711	D1		

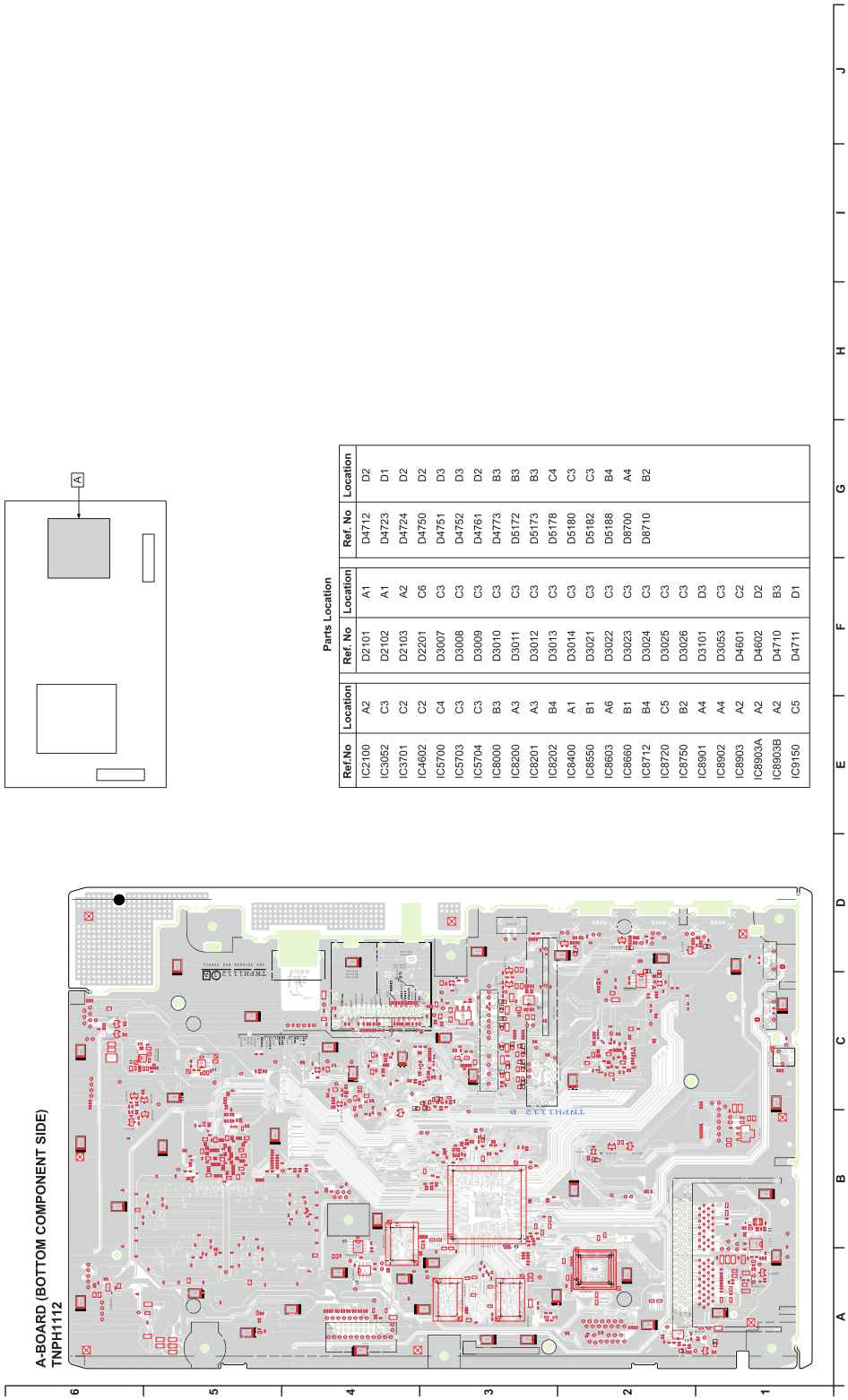

Model No. : TH-48AX670S GK-Board

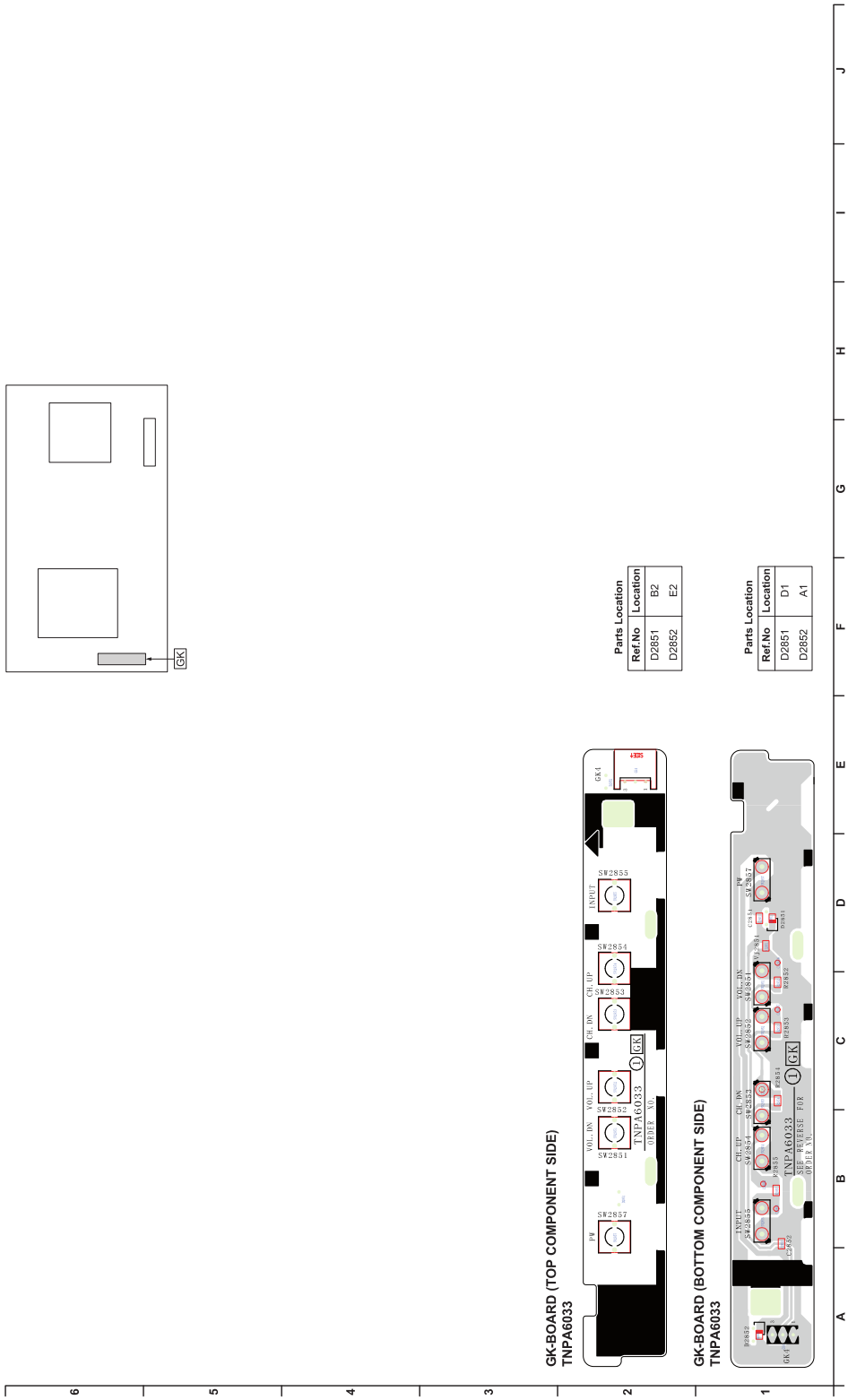

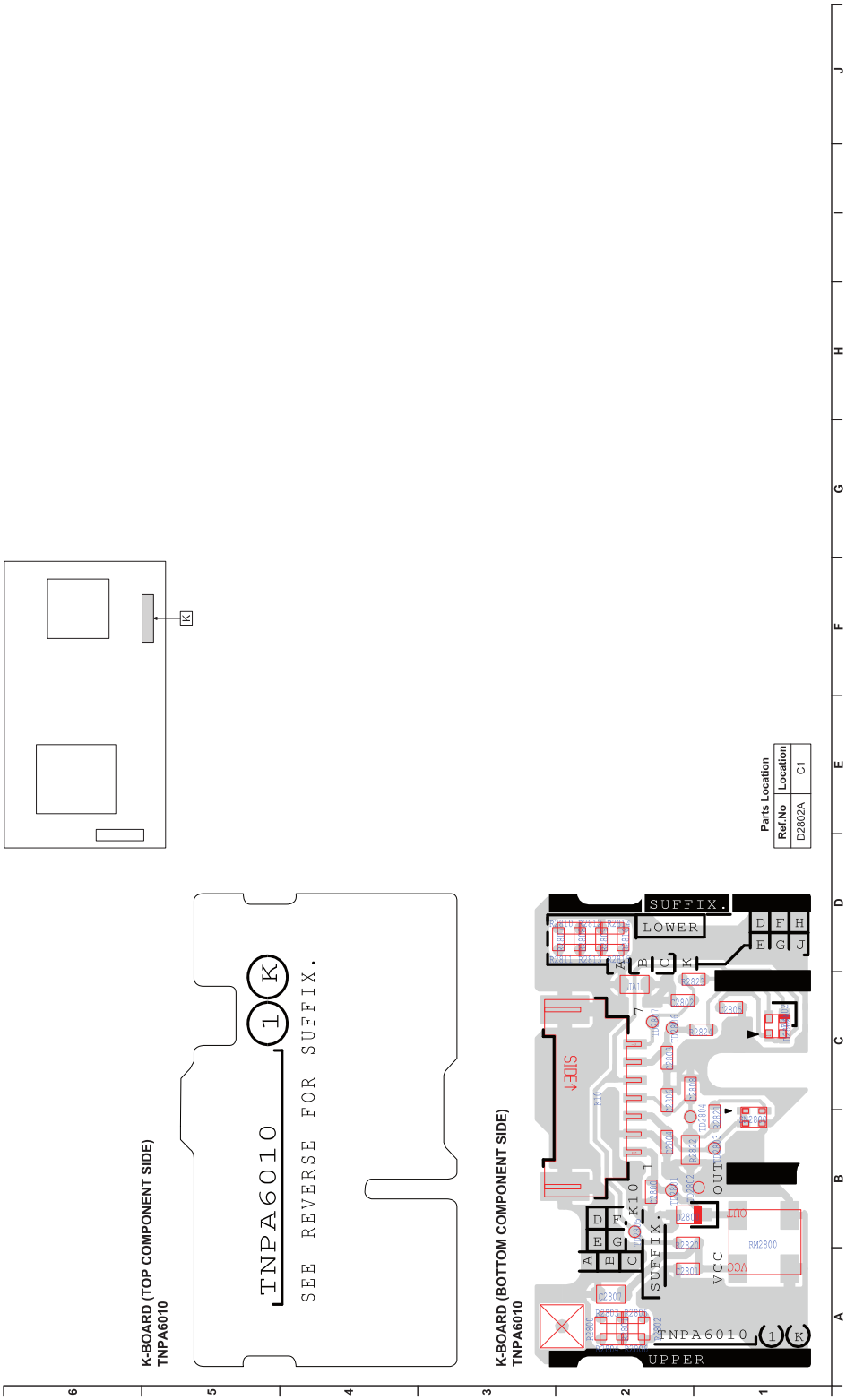
K-BOARD (TOP COMPONENT SIDE)
TNPA6010
TNPA6010
SEE REVERSE FOR SUFFIX.
K-BOARD (BOTTOM COMPONENT SIDE)
TNPA6010
SUFFIX.
LOWER
UPPER
SIDE
VCC
OUT
Parts Location
Ref.No
Location
D2802A
C1

Model No. : TH-48AX670S P-Board (Top Component Side)

Parts Location

Ref.No	Location	Ref. No	Location	Ref. No	Location
IC7401	C3	D7101	D1	D7316	C2
		D7102	A1	D7317	C3
		D7103	B2	D7400	B1
		D7104	B2	D7403	A3
		D7105	B2	D7404	B5
		D7106	B1	D7405	D3
		D7107	D1	D7407	A4
		D7109	B1	D7411	D3
		D7210	B2	D7412	A4
		D7211	B2	D7413	A4
		D7212	B2	D7414	A3
		D7215	B2	D7415	A3
		D7216	B2	D7502	D4
		D7221	B2	D7503	D4
		D7301	D2	D7810	D5
		D7302	D2	D7811	A5
		D7303	D2	D7812	C5
		D7304	C3	D7813	A5
		D7305	D2	D7814	A5
		D7309	D2	D7815	B5
		D7310	C3	D7816	B4
		D7312	C2	D7817	B5
		D7313	C2	D7818	D5
		D7315	D2		

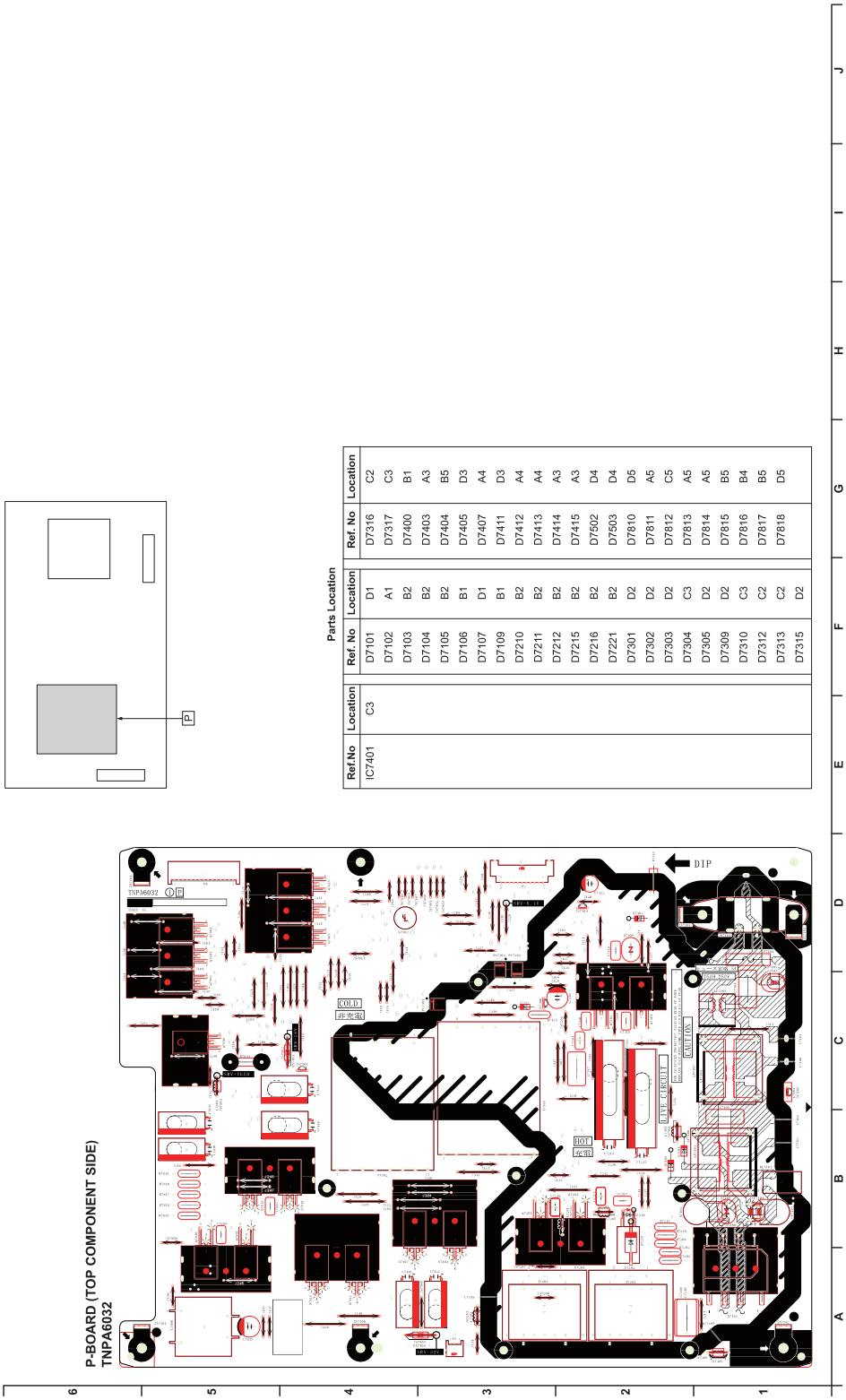

Model No. : TH-48AX670S P-Board (Bottom Component Side)

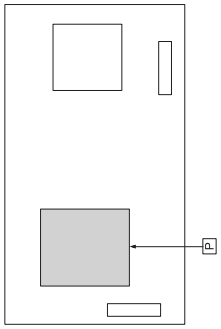

P-BOARD (BOTTOM COMPONENT SIDE)
TNPA6032

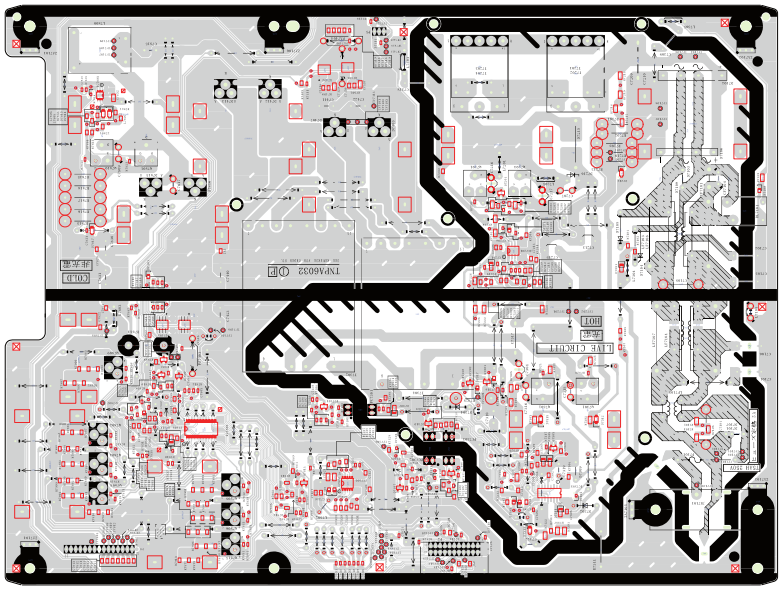

Parts Location

Ref.No	Location	Ref. No	Location	Ref. No	Location	Ref. No	Location
IC7201	C2	D7101	B1	D7304	B3	D7407	D4
IC7301	A2	D7102	D1	D7305	A2	D7411	A3
IC7401	B4	D7103	C1	D7306	B2	D7412	D4
IC7503	A3	D7104	C2	D7307	B3	D7413	D4
IC7800	B4	D7105	C2	D7308	B2	D7414	D3
IC7801	D5	D7106	C1	D7309	A2	D7415	D3
		D7107	B1	D7310	B3	D7502	A4
		D7109	C1	D7311	A2	D7503	A4
		D7210	C2	D7312	B2	D7809	A4
		D7211	C2	D7313	B2	D7810	A5
		D7212	C2	D7314	C2	D7811	D5
		D7215	D2	D7315	A2	D7812	A5
		D7216	C2	D7316	B2	D7813	D5
		D7219	C2	D7317	B3	D7814	D5
		D7221	C2	D7400	C1	D7815	C5
		D7301	A2	D7403	D3	D7816	C4
		D7302	A2	D7404	C5	D7817	C5
		D7303	A2	D7405	B3	D7818	A5

13 Exploded View and Replacement Parts List

Model No. : TH-48AX670S Parts Location

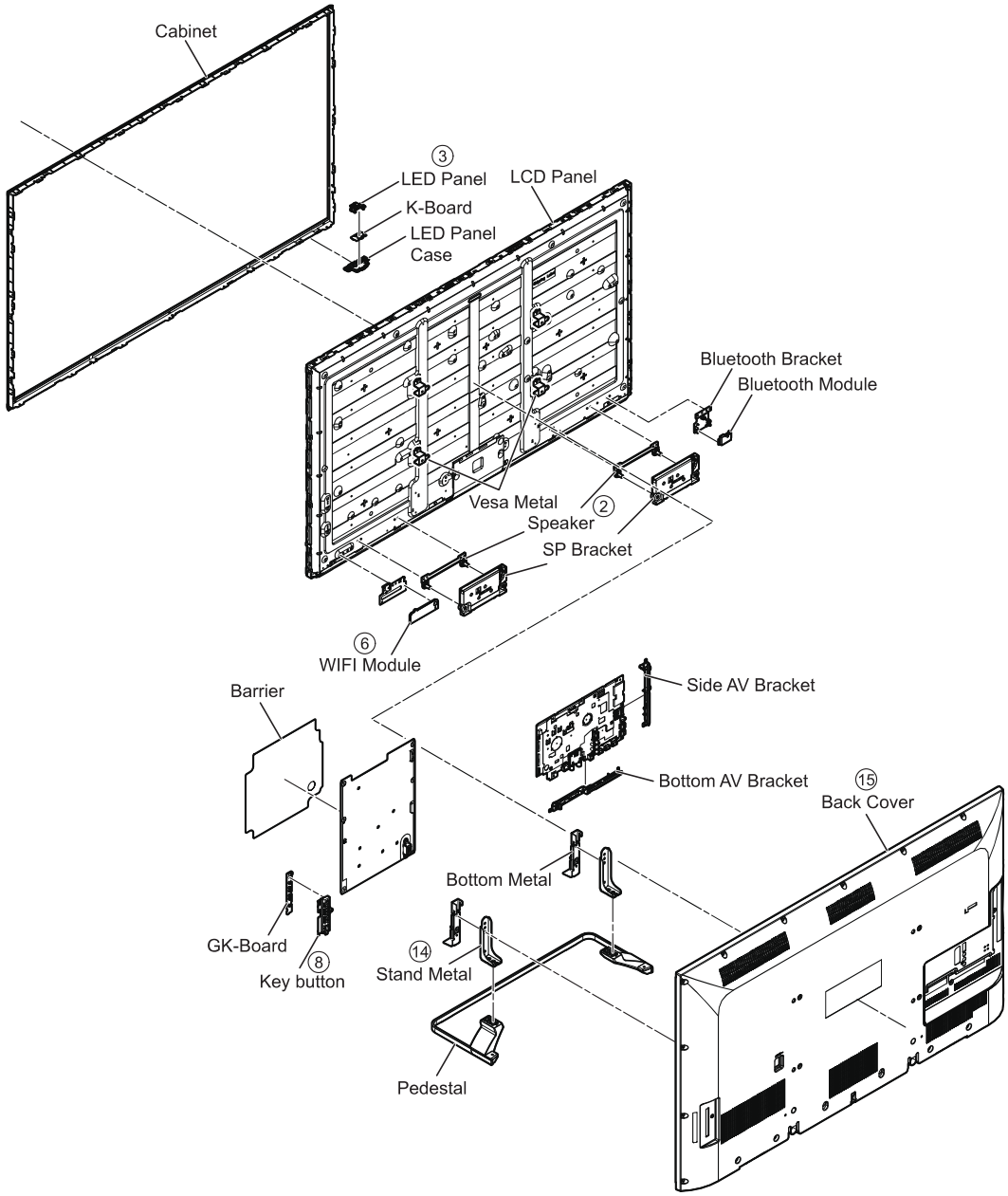

Model No. : TH-48AX670S Packing Exploded View 1

1. Tapping bottom flap carton.
2. Fix bottom cushion into packing case.
3. Pack tv set with set cover then insert into packing case.
4. Fix all tv accessorries and packed pedestal ass'y to cushions (refer page 20).
5. Fix center and top cushion.

No	Description	Qty	UOM
01	CARTON	1	PC
02	CUSHION_BOTTOM	1	PC
03	CUSHION_TOP	1	PC
04	CUSHION_FRONT	1	PC
05	SET_BAG	1	PC
06	PP_TAPE (BTM1.6)	1.6	MT

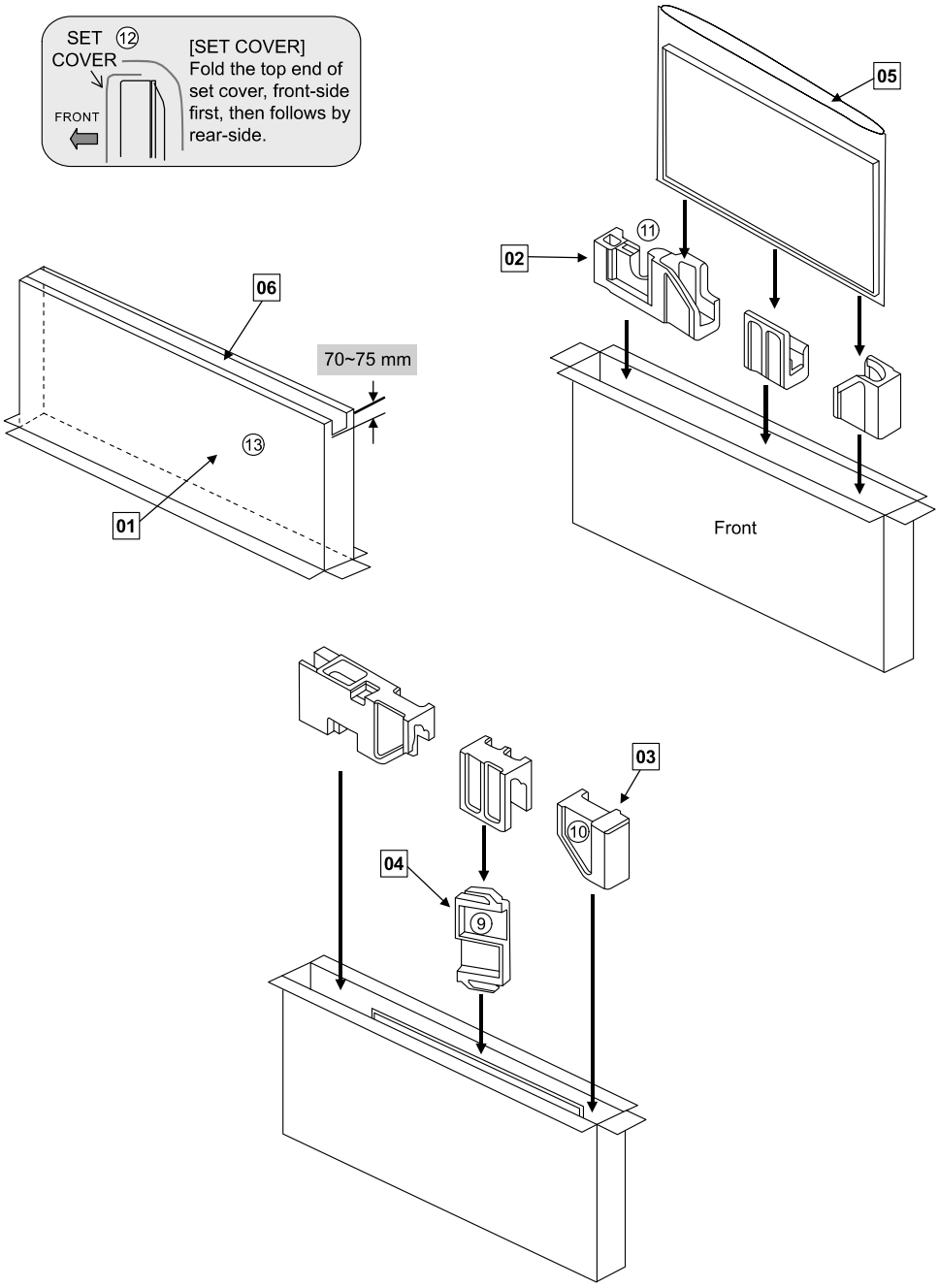

Model No. : TH-48AX670S Packing Exploded View 2

Locate all accessories follow accordingly.

No	Description	Qty	UOM
01	TOUCH_REMOTE_TRANSMITTER	1	PC
02	REMOTE_TRANSMITTER	1	PC
03	BATTERY	1	PC
04	R03NWC/2SKT BATTERY	1	PC
05	STAND_METAL_ASSY	1	PC
06	PACKED_PEDESTAL_ASSY	1	PC
07	3D_GLASS	1	PC
08	AC CORD	1	PC

[Note]
Make sure (+ve) side at top position

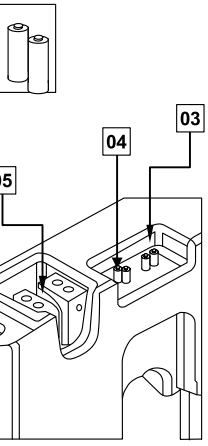

[Caution]
When you place your Metal Stand Assy be careful about the placement of the screws, place it into cushion pocket neatly.
*** use the illustrations as a reference.**

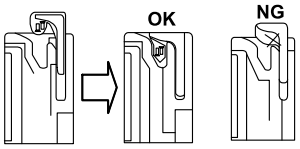

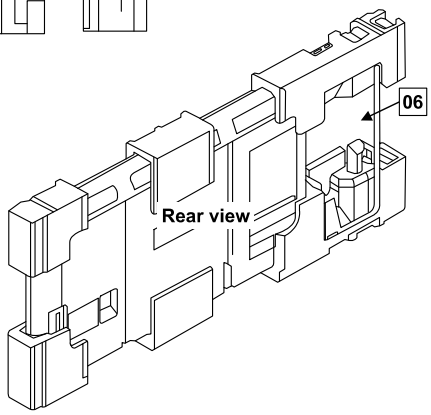

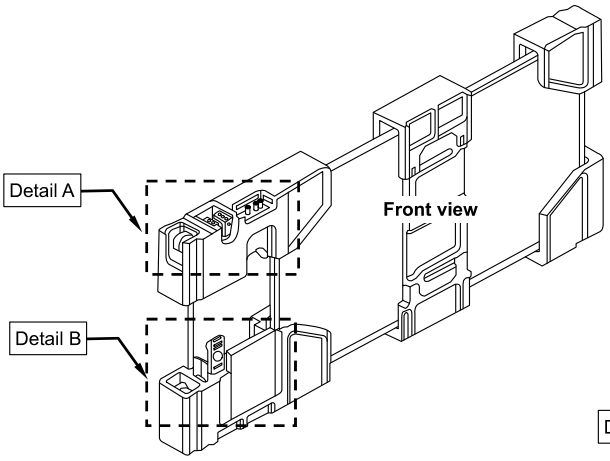

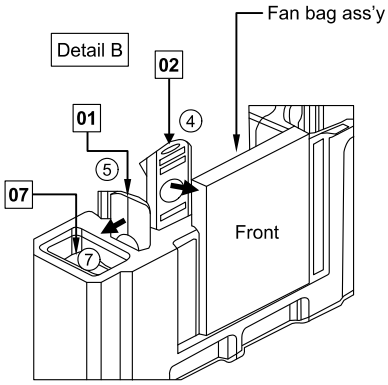

[Note]
1) LED at top position
2) Key button follow arrow mark

Model No. : TH-48AX670S Parts List

Change	Safety	Ref. No.	Part No.	Part Name & Description	Q'ty	Remarks
CAPACITORS						
		C0902	F1G1H220A948	C 22PF, 50V		
		C0903	F1G1H220A948	C 22PF, 50V		
		C0904	F1G1H220A948	C 22PF, 50V		
		C0905	F1G1H220A948	C 22PF, 50V		
		C2009	F1G1H102A946	C 1000PF, 50V		
		C2011	F1G1E103A172	C 0.01UF, 25V		
		C2012	F1G1E103A172	C 0.01UF, 25V		
		C2014	F1K1V106A010	C 10UF, 25V		
		C2018	F1G1H102A946	C 1000PF, 50V		
		C2020	F1G1E103A172	C 0.01UF, 25V		
		C2023	F1G1C104A146	C 0.1UF 16V		
		C2038	F1G1H102A946	C 1000PF, 50V		
		C2039	F1G1H102A946	C 1000PF, 50V		
		C2105	F1G1H102A459	C 1000PF, 50V		
		C2160	F1G1H221A834	C 220PF, 50V		
		C2161	F1G1H221A834	C 220PF, 50V		
		C2162	F1G1H221A834	C 220PF, 50V		
		C2163	F1G1H221A834	C 220PF, 50V		
		C2164	F1G1H221A834	C 220PF, 50V		
		C2165	F1G1H221A834	C 220PF, 50V		
		C2166	F1G1H221A834	C 220PF, 50V		
		C2209	F1G1E103A172	C 0.01UF, 25V		
		C2210	F1J0J2260004	C 22 UF 6.3 V		
		C2213	F1G1E103A172	C 0.01UF, 25V		
		C2214	F1G1E103A172	C 0.01UF, 25V		
		C2218	F1G1H101A948	C 100PF, 50V		
		C2251	F1G1C104A146	C 0.1UF 16V		
		C2801	F1H1H103B047	C 0.01UF, 50V		
		C2804	F1H1C104A178	C 0.1UF, 16V		
		C2807	F1J1A106A043	C 10UF, 10V		
		C2808	F1H1C104A178	C 0.1UF, 16V		
		C2851	F1J1H104A902	C 0.1UF, 50V		
		C2852	F1J1H104A902	C 0.1UF, 50V		
		C3000	F1G1C104A146	C 0.1UF 16V		
		C3036	F1G1A105A047	C 1UF 10V		
		C3037	F1G1A105A047	C 1UF 10V		
		C3101	F1G1H471A834	C 470PF, 50V		
		C3105	F1G1H471A834	C 470PF, 50V		
		C3174	F1G1A105A047	C 1UF 10V		
		C3175	F1G1A105A047	C 1UF 10V		
		C3176	F1G1A105A047	C 1UF 10V		
		C3712	F1G1C104A146	C 0.1UF 16V		
		C3733	F1G1C104A146	C 0.1UF 16V		
		C3735	F1G1C104A146	C 0.1UF 16V		
		C3753	F1G1A105A047	C 1UF 10V		
		C3754	F1G1A105A047	C 1UF 10V		
		C3757	F1G1C104A146	C 0.1UF 16V		
		C3768	F1J1A106A043	C 10UF, 10V		
		C4030	F1G1C104A146	C 0.1UF 16V		
		C4031	F1G1C104A146	C 0.1UF 16V		
		C4032	F1G1C104A146	C 0.1UF 16V		
		C4033	F1G1C104A146	C 0.1UF 16V		
		C4034	F1G1C104A146	C 0.1UF 16V		
		C4035	F1G1C104A146	C 0.1UF 16V		
		C4036	F1G1C104A146	C 0.1UF 16V		
		C4037	F1G1C104A146	C 0.1UF 16V		
		C4038	F1G1C104A146	C 0.1UF 16V		
		C4039	F1G1C104A146	C 0.1UF 16V		
		C4040	F1G1C104A146	C 0.1UF 16V		
		C4041	F1G1C104A146	C 0.1UF 16V		
		C4042	F1G1C104A146	C 0.1UF 16V		

Model No. : TH-48AX670S Parts List

Change	Safety	Ref. No.	Part No.	Part Name & Description	Q'ty	Remarks
		C4043	F1G1C104A146	C 0.1UF 16V		
		C4044	F1G1C104A146	C 0.1UF 16V		
		C4045	F1G1C104A146	C 0.1UF 16V		
		C4050	F1G1C104A146	C 0.1UF 16V		
		C4051	F1G1C104A146	C 0.1UF 16V		
		C4052	F1G1C104A146	C 0.1UF 16V		
		C4053	F1G1C104A146	C 0.1UF 16V		
		C4054	F1G1C104A146	C 0.1UF 16V		
		C4055	F1G1C104A146	C 0.1UF 16V		
		C4056	F1G1C104A146	C 0.1UF 16V		
		C4057	F1G1C104A146	C 0.1UF 16V		
		C4058	F1G1C104A146	C 0.1UF 16V		
		C4059	F1G1C104A146	C 0.1UF 16V		
		C4060	F1G1C104A146	C 0.1UF 16V		
		C4061	F1G1C104A146	C 0.1UF 16V		
		C4062	F1G1C104A146	C 0.1UF 16V		
		C4063	F1G1C104A146	C 0.1UF 16V		
		C4064	F1G1C104A146	C 0.1UF 16V		
		C4065	F1G1C104A146	C 0.1UF 16V		
		C4069	F1G1H101A948	C 100PF, 50V		
		C4080	F1G1C104A146	C 0.1UF 16V		
		C4081	F1G1C104A146	C 0.1UF 16V		
		C4082	F1G1C104A146	C 0.1UF 16V		
		C4083	F1G1C104A146	C 0.1UF 16V		
		C4084	F1G1C104A146	C 0.1UF 16V		
		C4085	F1G1C104A146	C 0.1UF 16V		
		C4086	F1G1C104A146	C 0.1UF 16V		
		C4087	F1G1C104A146	C 0.1UF 16V		
		C4088	F1G1C104A146	C 0.1UF 16V		
		C4089	F1G1C104A146	C 0.1UF 16V		
		C4090	F1G1C104A146	C 0.1UF 16V		
		C4091	F1G1C104A146	C 0.1UF 16V		
		C4092	F1G1C104A146	C 0.1UF 16V		
		C4093	F1G1C104A146	C 0.1UF 16V		
		C4094	F1G1C104A146	C 0.1UF 16V		
		C4095	F1G1C104A146	C 0.1UF 16V		
		C4501	F1J0G2260001	C 22 UF 4 V		
		C4502	F1J0G2260001	C 22 UF 4 V		
		C4503	F1J0G2260001	C 22 UF 4 V		
		C4504	F1J0G2260001	C 22 UF 4 V		
		C4505	F1J0G2260001	C 22 UF 4 V		
		C4506	F1G1C104A146	C 0.1UF 16V		
		C4507	F1G1C104A146	C 0.1UF 16V		
		C4508	F1G1C104A146	C 0.1UF 16V		
		C4509	F1G1C104A146	C 0.1UF 16V		
		C4510	F1G1C104A146	C 0.1UF 16V		
		C4511	F1G1C104A146	C 0.1UF 16V		
		C4512	F1G1C104A146	C 0.1UF 16V		
		C4513	F1G1C104A146	C 0.1UF 16V		
		C4514	F1G1C104A146	C 0.1UF 16V		
		C4515	F1G1C104A146	C 0.1UF 16V		
		C4516	F1G1C104A146	C 0.1UF 16V		
		C4517	F1G1C104A146	C 0.1UF 16V		
		C4518	F1G1C104A146	C 0.1UF 16V		
		C4519	F1G1C104A146	C 0.1UF 16V		
		C4520	F1G1C104A146	C 0.1UF 16V		
		C4521	F1G1C104A146	C 0.1UF 16V		
		C4522	F1G1C104A146	C 0.1UF 16V		
		C4523	F1G1C104A146	C 0.1UF 16V		
		C4524	F1G1C104A146	C 0.1UF 16V		
		C4525	F1G1C104A146	C 0.1UF 16V		
		C4526	F1G1C104A146	C 0.1UF 16V		

Model No. : TH-48AX670S Parts List

Change	Safety	Ref. No.	Part No.	Part Name & Description	Q'ty	Remarks
		C4527	F1G1C104A146	C 0.1UF 16V		
		C4528	F1G1C104A146	C 0.1UF 16V		
		C4529	F1G1C104A146	C 0.1UF 16V		
		C4530	F1G1H180A834	C 18PF, 50V		
		C4531	F1G1H7R0A833	C 7 PF, 50V		
		C4602	F1G1H222A946	C 2200PF, 50V		
		C4603	F1G1E333A144	C 0.033UF 25V		
		C4605	F1G1C104A146	C 0.1UF 16V		
		C4606	F1K1V106A010	C 10UF, 25V		
		C4607	F1K1V106A010	C 10UF, 25V		
		C4608	F1J0G2260001	C 22 UF 4 V		
		C4609	F1J0G2260001	C 22 UF 4 V		
		C4610	F1G1E103A172	C 0.01UF, 25V		
		C4620	F1G1A105A047	C 1UF 10V		
		C4621	F1G1A105A047	C 1UF 10V		
		C4700	F1G1A105A047	C 1UF 10V		
		C4701	F1G1A105A047	C 1UF 10V		
		C4782	F1G1C104A146	C 0.1UF 16V		
		C4906	F1H1E105A153	C 1UF, 16V		
		C4909	F1J1E105A287	C 1UF, 25V		
		C4910	F1H1E104A161	C 0.1UF, 25V		
		C4916	F1H1E104A161	C 0.1UF, 25V		
		C4919	F1J1E105A287	C 1UF, 25V		
		C4924	F1H1E104A161	C 0.1UF, 25V		
		C4926	F1K1V106A010	C 10UF, 25V		
		C4928	F1J1E105A287	C 1UF, 25V		
		C4933	F1H1E104A161	C 0.1UF, 25V		
		C4934	F1J1E105A287	C 1UF, 25V		
		C4937	F1J1E224A272	C 0.22UF, 25V		
		C4938	F1J1E224A272	C 0.22UF, 25V		
		C5000	F1G1A105A047	C 1UF 10V		
		C5002	F1G1A105A047	C 1UF 10V		
		C5004	F1G1A105A047	C 1UF 10V		
		C5006	F1H1E105A153	C 1UF, 16V		
		C5012	F1G1A105A047	C 1UF 10V		
		C5013	F1H1A225A102	C 2.2UF, 10V		
		C5020	F1G1C104A146	C 0.1UF 16V		
		C5021	F1G1A105A047	C 1UF 10V		
		C5022	F1G1A105A047	C 1UF 10V		
		C5026	F1H1E105A153	C 1UF, 16V		
		C5150	F1G1E103A172	C 0.01UF, 25V		
		C5151	F1G1E103A172	C 0.01UF, 25V		
		C5171	F1G1E103A172	C 0.01UF, 25V		
		C5705	F1K1V106A010	C 10UF, 25V		
		C5706	F1K1V106A010	C 10UF, 25V		
		C5707	F1J0G2260001	C 22 UF 4 V		
		C5708	F1J0G2260001	C 22 UF 4 V		
		C5709	F1G1C104A146	C 0.1UF 16V		
		C5711	F1G1E333A144	C 0.033UF 25V		
		C5713	F1G1H821A830	C 820 pF 50 V		
		C5717	F1J1A106A043	C 10UF, 10V		
		C5718	F1J1A106A043	C 10UF, 10V		
		C5720	F1G1E103A172	C 0.01UF, 25V		
		C6704	F1J1A106A043	C 10UF, 10V		
		C6708	F1J1A106A043	C 10UF, 10V		
		C6726	F1G1H220A948	C 22PF, 50V		
		C6727	F1G1H220A948	C 22PF, 50V		
		C6734	F1G1C104A146	C 0.1UF 16V		
		C6735	F1G1C104A146	C 0.1UF 16V		
		C6736	F1G1H101A948	C 100PF, 50V		
		C6737	F1G1H101A948	C 100PF, 50V		
		C6740	F1G1H102A946	C 1000PF, 50V		

Model No. : TH-48AX670S Parts List

Change	Safety	Ref. No.	Part No.	Part Name & Description	Q'ty	Remarks
		C6742	F1G1H220A948	C 22PF, 50V		
		C6743	F1G1H220A948	C 22PF, 50V		
		C6744	F1G1H220A948	C 22PF, 50V		
		C6745	F1G1H220A948	C 22PF, 50V		
		C6746	F1G1C104A146	C 0.1UF 16V		
		C6748	F1G1H102A946	C 1000PF, 50V		
		C6752	F1G1H101A948	C 100PF, 50V		
		C6757	F1G1C104A146	C 0.1UF 16V		
		C6760	F1G1H220A948	C 22PF, 50V		
		C6761	F1G1H220A948	C 22PF, 50V		
		C6762	F1G1H100A948	C 10PF, 50V		
		C6764	F1G1H121A834	C 120PF, 50V		
		C6766	F1G1E103A172	C 0.01UF, 25V		
		C6767	F1G1E103A172	C 0.01UF, 25V		
		C6768	F1G1H102A946	C 1000PF, 50V		
		C6769	F1G1E103A172	C 0.01UF, 25V		
		C6770	F1G1E103A172	C 0.01UF, 25V		
		C6771	F1G1E103A172	C 0.01UF, 25V		
		C6772	F1G1E103A172	C 0.01UF, 25V		
		C6773	F1G1H102A946	C 1000PF, 50V		
		C6774	F1G1C104A146	C 0.1UF 16V		
		C6775	F1G1C104A146	C 0.1UF 16V		
		C6776	F1G1H5R0A831	C 5PF, 50V		
		C6777	F1G1H5R0A831	C 5PF, 50V		
		C6780	F1G1H222A946	C 2200PF, 50V		
		C6781	F1G1H331A830	C 330PF, 50V		
		C6782	F1G1H121A834	C 120PF, 50V		
		C6783	F1G1H121A834	C 120PF, 50V		
		C6785	F1G0J105A049	C 1UF, 6.3V		
		C6789	F1G1H181A834	C 180PF, 50V		
		C6790	F1G1H181A834	C 180PF, 50V		
		C6791	F1G1H102A946	C 1000PF, 50V		
		C6793	F1G1H102A946	C 1000PF, 50V		
		C6794	F1G1C104A146	C 0.1UF 16V		
		C6795	F1G1C104A146	C 0.1UF 16V		
		C6797	F1G1H102A946	C 1000PF, 50V		
		C6798	F1G1H102A946	C 1000PF, 50V		
		C6799	F1H1H181B052	C 180PF, 50V		
		C6800	F1G1H8R0A833	C 8 PF, 50V		
		C6801	F1G1H8R0A833	C 8 PF, 50V		
		C6803	F1G1C104A146	C 0.1UF 16V		
		C6807	F1G1C104A146	C 0.1UF 16V		
		C6811	F1G1C104A146	C 0.1UF 16V		
		C6816	F1G1H220A948	C 22PF, 50V		
		C6820	F1G1H220A948	C 22PF, 50V		
		C6822	F1G1C104A146	C 0.1UF 16V		
		C6823	F1G1C104A146	C 0.1UF 16V		
		C6825	F1G1C104A146	C 0.1UF 16V		
		C6826	F1G1C104A146	C 0.1UF 16V		
		C6836	F1J1A106A043	C 10UF, 10V		
		C6839	F1J1A106A043	C 10UF, 10V		
		C6843	F1J1A106A043	C 10UF, 10V		
		C6847	F1G1C104A146	C 0.1UF 16V		
		C6849	F1G1C104A146	C 0.1UF 16V		
		C6965	F1G0J105A049	C 1UF, 6.3V		
		C6983	F1G1H102A946	C 1000PF, 50V		
	⚠	C7102	F1AAF471A019	C 470PF, 240V		
	⚠	C7103	F1AAF471A019	C 470PF, 240V		
	⚠	C7104	F0CAF2240010	C 0.22UF, 240V		
	⚠	C7105	F0CAF2240010	C 0.22UF, 240V		
		C7201	F1H1H102B052	C 1000PF, 50V		
		C7202	F1H1H102B052	C 1000PF, 50V		

Model No. : TH-48AX670S Parts List

Change	Safety	Ref. No.	Part No.	Part Name & Description	Q'ty	Remarks
		C7203	F1H1H104B047	C 0.1UF, 50V		
		C7204	F1J1E474A272	C 0.47UF, 25V		
		C7205	F1J1H103A900	C 0.01UF, 50V		
		C7206	F1H1H104B047	C 0.1UF, 50V		
		C7207	F1A3A471A060	C 470PF 1KV		
		C7208	F1J1E475A257	C 4.7UF, 25V		
		C7210	ECWFD2W155KC	C 1.5UF , 240V		
		C7212	F1J1H223A900	C 0.022UF, 50V		
		C7213	F2A2W7700001	C 77UF , 450V		
		C7214	F1J1H103A900	C 0.01UF, 50V		
		C7215	F2A2W7700001	C 77UF , 450V		
		C7216	F1A3A221A060	C 220PF 1KV		
		C7217	F1A3A221A060	C 220PF 1KV		
		C7302	F1J1H104A902	C 0.1UF, 50V		
		C7303	F1J1H104A902	C 0.1UF, 50V		
		C7304	F1A3A331A060	C 330PF , 1kV		
		C7305	F1H1E105A153	C 1UF, 16V		
		C7306	F1J1H104A902	C 0.1UF, 50V		
		C7307	F1H1H101B052	C 100PF, 50V		
		C7309	F1AAF471A019	C 470UF, 25V		
		C7310	F2A1E4710124	C 470UF, 25V		
		C7311	F1J1E105A287	C 1UF, 25V		
		C7312	F1H1C474A178	C 0.47UF, 16V		
		C7313	F1J1H102A909	C 1000pF, 50V		
		C7315	F1A3A221A060	C 220PF 1KV		
		C7316	F1A3A221A060	C 220PF 1KV		
		C7317	ECWH8333HAC	C 0.033UF, 800V		
		C7319	F1A3A152A060	C 1500PF, 1kV		
		C7322	F2A1E151B705	E 150UF, 25V		
		C7416	F1J1C475A225	C 4.7UF, 10V		
		C7417	F1H1C474A178	C 0.47UF, 16V		
		C7418	F1H1H104B047	C 0.1UF, 50V		
		C7422	F2AZZ4710003	C 470PF, 240V		
		C7423	F2AZZ2220001	C 2200UF , 240V		
		C7426	F1J1H102A909	C 1000pF, 50V		
		C7434	F1J1E105A287	C 1UF, 25V		
		C7436	F1H1H104B047	C 0.1UF, 50V		
		C7438	F1H1C474A178	C 0.47UF, 16V		
		C7439	F1J1C475A225	C 4.7UF, 10V		
		C7440	F2AZZ2220001	C 2200UF , 240V		
		C7441	F2AZZ4710003	C 470PF, 240V		
		C7521	F1K1E106A167	C 10UF, 25V		
		C7522	F1K1E106A167	C 10UF, 25V		
		C7523	F1J1E105A287	C 1UF, 25V		
		C7524	F1J1E105A287	C 1UF, 25V		
		C7526	F1J1A106A111	C 10UF, 10V		
		C7527	F1J1A106A111	C 10UF, 10V		
		C7528	F1H1H103B047	C 0.01UF, 50V		
		C7530	F1J1H223A900	C 0.022UF, 50V		
		C7531	F1J1H472A900	C 4700PF, 50V		
		C7801	F1J1E105A287	C 1UF, 25V		
		C7802	F1J1H104A902	C 0.1UF, 50V		
		C7803	F1H1C224A178	C 0.22 uF 16 V		
		C7804	F1H1H103B047	C 0.01UF, 50V		
		C7805	F1J1H103A900	C 0.01UF, 50V		
		C7806	F1J1E105A287	C 1UF, 25V		
		C7807	F1H1H104B047	C 0.1UF, 50V		
		C7808	F1H1H102B052	C 1000PF, 50V		
		C7809	F1A3A471A060	C 470PF 1KV		
		C7815	F2A1J1210012	C 120UF, 63V		
		C7816	F1H1H102B048	C 1000PF, 50V		
		C7817	F1A3A221A060	C 220PF 1KV		

Model No. : TH-48AX670S Parts List

Change	Safety	Ref. No.	Part No.	Part Name & Description	Q'ty	Remarks
		C7821	F1H1H102B052	C 1000PF, 50V		
		C7824	F1H1H102B048	C 1000PF, 50V		
		C7825	F1H1H102B048	C 1000PF, 50V		
		C7828	F1J1H103A900	C 0.01UF, 50V		
		C7829	F1H1H103B047	C 0.01UF, 50V		
		C7830	F2A2A1010047	C 100UF, 100V		
		C7831	F2A2A1010047	C 100UF, 100V		
		C7832	F1K1E105A167	C 1UF, 25V		
		C7841	F1J2E1030004	C 0.01UF, 250V		
		C7842	F1J2E1030004	C 0.01UF, 250V		
		C7844	F1J2E1030004	C 0.01UF, 250V		
		C7845	F1J2E1030004	C 0.01UF, 250V		
		C7846	F1J2E1030004	C 0.01UF, 250V		
		C7847	F1J2E1030004	C 0.01UF, 250V		
		C7849	F1H1H102B048	C 1000PF, 50V		
		C7850	F1H1H102B048	C 1000PF, 50V		
		C8002	F1G1A105A047	C 1UF 10V		
		C8003	F1G1H151A834	C 150PF, 50V		
		C8004	F1G1H151A834	C 150PF, 50V		
		C8005	F1G1H151A834	C 150PF, 50V		
		C8006	F1G1H151A834	C 150PF, 50V		
		C8007	F1G1H151A834	C 150PF, 50V		
		C8008	F1G1A105A047	C 1UF 10V		
		C8012	F1G1A105A047	C 1UF 10V		
		C8013	F1G1A105A047	C 1UF 10V		
		C8014	F1G1A105A047	C 1UF 10V		
		C8016	F1J1A106A043	C 10UF, 10V		
		C8017	F1G1A105A047	C 1UF 10V		
		C8018	F1G1A105A047	C 1UF 10V		
		C8019	F1G1A105A047	C 1UF 10V		
		C8020	F1G1C104A146	C 0.1UF 16V		
		C8022	F1G1A105A047	C 1UF 10V		
		C8024	F1G1C104A146	C 0.1UF 16V		
		C8025	F1G1C104A146	C 0.1UF 16V		
		C8026	F1G1C104A146	C 0.1UF 16V		
		C8028	F1G1C104A146	C 0.1UF 16V		
		C8029	F1J1A106A043	C 10UF, 10V		
		C8031	F1G1C104A146	C 0.1UF 16V		
		C8033	F1G1C104A146	C 0.1UF 16V		
		C8034	F1J1A106A043	C 10UF, 10V		
		C8035	F1J0G2260001	C 22 UF 4 V		
		C8037	F1G1C104A146	C 0.1UF 16V		
		C8039	F1G1A105A047	C 1UF 10V		
		C8041	F1G1A105A047	C 1UF 10V		
		C8043	F1G1C104A146	C 0.1UF 16V		
		C8044	F1J0G2260001	C 22 UF 4 V		
		C8045	F1J0G2260001	C 22 UF 4 V		
		C8046	F1G1A105A047	C 1UF 10V		
		C8047	F1H1A475A102	C 4.7UF, 10V		
		C8048	F1H1A475A102	C 4.7UF, 10V		
		C8049	F1G1C104A146	C 0.1UF 16V		
		C8053	F1G1H470A834	C 47PF, 50V		
		C8054	F1G1A105A047	C 1UF 10V		
		C8055	F1G1H331A830	C 330PF, 50V		
		C8057	F1J0G2260001	C 22 UF 4 V		
		C8059	F1J0G2260001	C 22 UF 4 V		
		C8060	F1J0G2260001	C 22 UF 4 V		
		C8062	F1G1H331A830	C 330PF, 50V		
		C8063	F1G1H470A834	C 47PF, 50V		
		C8064	F1G1H331A830	C 330PF, 50V		
		C8065	F1G1H470A834	C 47PF, 50V		
		C8066	F1G1H331A830	C 330PF, 50V		

Model No. : TH-48AX670S Parts List

Change	Safety	Ref. No.	Part No.	Part Name & Description	Q'ty	Remarks
		C8100	F1G1H222A946	C 2200PF, 50V		
		C8101	F1G1C104A146	C 0.1UF 16V		
		C8102	F1K1V106A010	C 10UF, 25V		
		C8103	F1K1V106A010	C 10UF, 25V		
		C8104	F1H1E104A161	C 0.1UF, 25V		
		C8105	F1G1E332A172	C 3300PF, 25V		
		C8106	F1J0G2260001	C 22 UF 4 V		
		C8107	F1J0G2260001	C 22 UF 4 V		
		C8108	F1J0G2260001	C 22 UF 4 V		
		C8109	F1H1E105A153	C 1UF, 16V		
		C8110	F1J1E475A257	C 4.7UF, 25V		
		C8112	F1K1V106A010	C 10UF, 25V		
		C8114	F1G1C104A146	C 0.1UF 16V		
		C8115	F1G1C104A146	C 0.1UF 16V		
		C8117	F1G1E332A172	C 3300PF, 25V		
		C8119	F1J0G2260001	C 22 UF 4 V		
		C8120	F1J0G2260001	C 22 UF 4 V		
		C8123	F1H1E104A161	C 0.1UF, 25V		
		C8203	F1G1C104A146	C 0.1UF 16V		
		C8204	F1G1C104A146	C 0.1UF 16V		
		C8205	F1G1C104A146	C 0.1UF 16V		
		C8206	F1G1C104A146	C 0.1UF 16V		
		C8207	F1J1A106A043	C 10UF, 10V		
		C8210	F1G1C104A146	C 0.1UF 16V		
		C8212	F1G1C104A146	C 0.1UF 16V		
		C8215	F1G1H331A830	C 330PF, 50V		
		C8216	F1J1A106A043	C 10UF, 10V		
		C8218	F1G1C104A146	C 0.1UF 16V		
		C8220	F1G1C104A146	C 0.1UF 16V		
		C8221	F1G1C104A146	C 0.1UF 16V		
		C8222	F1G1A105A047	C 1UF 10V		
		C8223	F1G1H331A830	C 330PF, 50V		
		C8226	F1G1H331A830	C 330PF, 50V		
		C8227	F1G1H331A830	C 330PF, 50V		
		C8229	F1G1A105A047	C 1UF 10V		
		C8231	F1G1C104A146	C 0.1UF 16V		
		C8233	F1G1C104A146	C 0.1UF 16V		
		C8234	F1G1C104A146	C 0.1UF 16V		
		C8246	F1J1A106A043	C 10UF, 10V		
		C8250	F1G1C104A146	C 0.1UF 16V		
		C8251	F1G1H331A830	C 330PF, 50V		
		C8254	F1G1C104A146	C 0.1UF 16V		
		C8255	F1G1A105A047	C 1UF 10V		
		C8256	F1G1H331A830	C 330PF, 50V		
		C8257	F1G1A105A047	C 1UF 10V		
		C8259	F1G1C104A146	C 0.1UF 16V		
		C8300	F1G1A105A047	C 1UF 10V		
		C8301	F1G1A105A047	C 1UF 10V		
		C8302	F1G1A105A047	C 1UF 10V		
		C8303	F1G1A105A047	C 1UF 10V		
		C8304	F1G1A105A047	C 1UF 10V		
		C8305	F1G1H100A948	C 10PF, 50V		
		C8306	F1G1H120A948	C 12PF, 50V		
		C8600	F1H1E105A153	C 1UF, 16V		
		C8602	F1G1H120A948	C 12PF, 50V		
		C8603	F1G1H120A948	C 12PF, 50V		
		C8604	F1G1C104A146	C 0.1UF 16V		
		C8605	F1J1A106A043	C 10UF, 10V		
		C8608	F1G1C104A146	C 0.1UF 16V		
		C8609	F1H1E105A153	C 1UF, 16V		
		C8611	F1G1C104A146	C 0.1UF 16V		
		C8615	F1G1C104A146	C 0.1UF 16V		

Model No. : TH-48AX670S Parts List

Change	Safety	Ref. No.	Part No.	Part Name & Description	Q'ty	Remarks
		C8616	F1G1C104A146	C 0.1UF 16V		
		C8617	F1G1E103A172	C 0.01UF, 25V		
		C8619	F1G1C104A146	C 0.1UF 16V		
		C8620	F1G1C104A146	C 0.1UF 16V		
		C8627	F1G1C104A146	C 0.1UF 16V		
		C8628	F1K0J226A049	C 22UF, 6.3V		
		C8629	F1K0J226A049	C 22UF, 6.3V		
		C8635	F1J1A106A043	C 10UF, 10V		
		C8636	F1G1C104A146	C 0.1UF 16V		
		C8637	F1J1A106A043	C 10UF, 10V		
		C8638	F1G1C104A146	C 0.1UF 16V		
		C8639	F1J1A106A043	C 10UF, 10V		
		C8640	F1G1C104A146	C 0.1UF 16V		
		C8642	F1J1A106A043	C 10UF, 10V		
		C8643	F1G1C104A146	C 0.1UF 16V		
		C8644	F1G1E103A172	C 0.01UF, 25V		
		C8645	F1G1C104A146	C 0.1UF 16V		
		C8646	F1G1C104A146	C 0.1UF 16V		
		C8649	F1G1C104A146	C 0.1UF 16V		
		C8652	F1G1C104A146	C 0.1UF 16V		
		C8655	F1G1C104A146	C 0.1UF 16V		
		C8657	F1J1A106A043	C 10UF, 10V		
		C8661	F1G1C104A146	C 0.1UF 16V		
		C8674	F1G1C104A146	C 0.1UF 16V		
		C8675	F1G1C104A146	C 0.1UF 16V		
		C8676	F1G1C104A146	C 0.1UF 16V		
		C8677	F1J1A106A043	C 10UF, 10V		
		C8678	F1J1A106A043	C 10UF, 10V		
		C8679	F1J1A106A043	C 10UF, 10V		
		C8690	F1J1A106A043	C 10UF, 10V		
		C8691	F1J1A106A043	C 10UF, 10V		
		C8692	F1G1A105A047	C 1UF 10V		
		C8694	F1J1A106A043	C 10UF, 10V		
		C8701	F1G1E103A172	C 0.01UF, 25V		
		C8702	F1K1V106A010	C 10UF, 25V		
		C8704	F1J1A106A043	C 10UF, 10V		
		C8705	F1J1A106A043	C 10UF, 10V		
		C8706	F1G1C104A146	C 0.1UF 16V		
		C8707	F1G1C473A146	C 0.047UF, 16V		
		C8708	F1G1H222A946	C 2200PF, 50V		
		C8712	F1K1V106A010	C 10UF, 25V		
		C8713	F1H1E104A161	C 0.1UF, 25V		
		C8714	F1G1H102A946	C 1000PF, 50V		
		C8715	F1G1H680A834	C 68 pF 50 V		
		C8716	F1J1A106A043	C 10UF, 10V		
		C8717	F1J1A106A043	C 10UF, 10V		
		C8718	F1J1A106A043	C 10UF, 10V		
		C8719	F1J1A106A043	C 10UF, 10V		
		C8723	F1G1H151A834	C 150PF, 50V		
		C8724	F1G1E332A172	C 3300PF, 25V		
		C8725	F1G1H680A834	C 68 pF 50 V		
		C8726	F1K1V106A010	C 10UF, 25V		
		C8727	F1K1V106A010	C 10UF, 25V		
		C8728	F1H1E105A153	C 1UF, 16V		
		C8729	F1H1C474A178	C 0.47UF, 16V		
		C8730	F1J1E475A257	C 4.7UF, 25V		
		C8734	F1K1V106A010	C 10UF, 25V		
		C8735	F1K1V106A010	C 10UF, 25V		
		C8736	F1K1V106A010	C 10UF, 25V		
		C8740	F1K1V106A010	C 10UF, 25V		
		C8741	F1K1V106A010	C 10UF, 25V		
		C8742	F1H1H103B047	C 0.01UF, 50V		

Model No. : TH-48AX670S Parts List

Change	Safety	Ref. No.	Part No.	Part Name & Description	Q'ty	Remarks
		C8743	F1H1H103B047	C 0.01UF, 50V		
		C8752	F1G1A105A047	C 1UF 10V		
		C8762	F1G1A105A047	C 1UF 10V		
		C8773	F1G1C104A146	C 0.1UF 16V		
		C8903	F1G1C104A146	C 0.1UF 16V		
		C8910	F1H1E105A153	C 1UF, 16V		
		C8911	F1G1C104A146	C 0.1UF 16V		
		C8912	F1J1A106A043	C 10UF, 10V		
		C8913	F1G1C104A146	C 0.1UF 16V		
		C8914	F1J1A106A043	C 10UF, 10V		
		C8915	F1G1H100A948	C 10PF, 50V		
		C9000	F1J0G2260001	C 22 UF 4 V		
		C9001	F1G1C104A146	C 0.1UF 16V		
		C9002	F1G1C104A146	C 0.1UF 16V		
		C9003	F1G1C104A146	C 0.1UF 16V		
		C9004	F1G1C104A146	C 0.1UF 16V		
		C9005	F1G1C104A146	C 0.1UF 16V		
		C9006	F1G1C104A146	C 0.1UF 16V		
		C9007	F1G1C104A146	C 0.1UF 16V		
		C9008	F1G1C104A146	C 0.1UF 16V		
		C9009	F1G1C104A146	C 0.1UF 16V		
		C9010	F1G1C104A146	C 0.1UF 16V		
		C9011	F1G1C104A146	C 0.1UF 16V		
		C9012	F1G1C104A146	C 0.1UF 16V		
		C9013	F1G1C104A146	C 0.1UF 16V		
		C9014	F1G1C104A146	C 0.1UF 16V		
		C9015	F1J0G2260001	C 22 UF 4 V		
		C9016	F1G1C104A146	C 0.1UF 16V		
		C9017	F1G1C104A146	C 0.1UF 16V		
		C9018	F1G1C104A146	C 0.1UF 16V		
		C9019	F1G1C104A146	C 0.1UF 16V		
		C9030	F1J1A106A043	C 10UF, 10V		
		C9031	F1G1C104A146	C 0.1UF 16V		
		C9032	F1G1C104A146	C 0.1UF 16V		
		C9033	F1G1C104A146	C 0.1UF 16V		
		C9034	F1G1C104A146	C 0.1UF 16V		
		C9035	F1G1C104A146	C 0.1UF 16V		
		C9036	F1G1C104A146	C 0.1UF 16V		
		C9037	F1G1C104A146	C 0.1UF 16V		
		C9038	F1G1C104A146	C 0.1UF 16V		
		C9039	F1G1C104A146	C 0.1UF 16V		
		C9040	F1G1C104A146	C 0.1UF 16V		
		C9041	F1G1C104A146	C 0.1UF 16V		
		C9042	F1G1C104A146	C 0.1UF 16V		
		C9043	F1G1C104A146	C 0.1UF 16V		
		C9044	F1G1C104A146	C 0.1UF 16V		
		C9045	F1J1A106A043	C 10UF, 10V		
		C9046	F1G1C104A146	C 0.1UF 16V		
		C9047	F1G1C104A146	C 0.1UF 16V		
		C9048	F1J0G2260001	C 22 UF 4 V		
		C9049	F1J0G2260001	C 22 UF 4 V		
		C9050	F1G1C104A146	C 0.1UF 16V		
		C9051	F1G1C104A146	C 0.1UF 16V		
		C9052	F1G1C104A146	C 0.1UF 16V		
		C9053	F1G1C104A146	C 0.1UF 16V		
		C9054	F1G1C104A146	C 0.1UF 16V		
		C9055	F1G1C104A146	C 0.1UF 16V		
		C9056	F1G1C104A146	C 0.1UF 16V		
		C9057	F1G1C104A146	C 0.1UF 16V		
		C9058	F1G1C104A146	C 0.1UF 16V		
		C9059	F1G1C104A146	C 0.1UF 16V		
		C9060	F1G1C104A146	C 0.1UF 16V		

Model No. : TH-48AX670S Parts List

Change	Safety	Ref. No.	Part No.	Part Name & Description	Q'ty	Remarks
		C9061	F1G1C104A146	C 0.1UF 16V		
		C9062	F1J0G2260001	C 22 UF 4 V		
		C9063	F1J0G2260001	C 22 UF 4 V		
		C9064	F1G1C104A146	C 0.1UF 16V		
		C9065	F1G1C104A146	C 0.1UF 16V		
		C9066	F1G1C104A146	C 0.1UF 16V		
		C9067	F1G1C104A146	C 0.1UF 16V		
		C9068	F1G1C104A146	C 0.1UF 16V		
		C9069	F1G1C104A146	C 0.1UF 16V		
		C9070	F1G1C104A146	C 0.1UF 16V		
		C9071	F1G1C104A146	C 0.1UF 16V		
		C9072	F1G1C104A146	C 0.1UF 16V		
		C9073	F1G1C104A146	C 0.1UF 16V		
		C9074	F1G1C104A146	C 0.1UF 16V		
		C9075	F1G1C104A146	C 0.1UF 16V		
		C9080	F1J1A106A043	C 10UF, 10V		
		C9081	F1G1C104A146	C 0.1UF 16V		
		C9082	F1G1C104A146	C 0.1UF 16V		
		C9083	F1J1A106A043	C 10UF, 10V		
		C9084	F1G1C104A146	C 0.1UF 16V		
		C9085	F1G1C104A146	C 0.1UF 16V		
		C9086	F1G1C104A146	C 0.1UF 16V		
		C9087	F1J1A106A043	C 10UF, 10V		
		C9088	F1G1C104A146	C 0.1UF 16V		
		C9089	F1G1C104A146	C 0.1UF 16V		
		C9090	F1G1C104A146	C 0.1UF 16V		
		C9091	F1G1C104A146	C 0.1UF 16V		
		C9092	F1G1C104A146	C 0.1UF 16V		
		C9093	F1G1C104A146	C 0.1UF 16V		
		C9094	F1G1C104A146	C 0.1UF 16V		
		C9095	F1G1C104A146	C 0.1UF 16V		
		C9096	F1G1C104A146	C 0.1UF 16V		
		C9097	F1J1A106A043	C 10UF, 10V		
		C9098	F1G1C104A146	C 0.1UF 16V		
		C9099	F1G1C104A146	C 0.1UF 16V		
		C9100	F1J1A106A043	C 10UF, 10V		
		C9101	F1G1C104A146	C 0.1UF 16V		
		C9102	F1G1C104A146	C 0.1UF 16V		
		C9103	F1G1C104A146	C 0.1UF 16V		
		C9104	F1G1C104A146	C 0.1UF 16V		
		C9105	F1G1C104A146	C 0.1UF 16V		
		C9106	F1G1C104A146	C 0.1UF 16V		
		C9110	F1J1A106A043	C 10UF, 10V		
		C9111	F1G1C104A146	C 0.1UF 16V		
		C9112	F1G1C104A146	C 0.1UF 16V		
		C9113	F1G1C104A146	C 0.1UF 16V		
		C9114	F1G1C104A146	C 0.1UF 16V		
		C9116	F1G1A105A047	C 1UF 10V		
		C9117	F1G1A105A047	C 1UF 10V		
		C9120	F1G1A105A047	C 1UF 10V		
		C9122	F1G1A105A047	C 1UF 10V		
		C9123	F1G1A105A047	C 1UF 10V		
		C9125	F1G1A105A047	C 1UF 10V		
		C9128	F1G1A105A047	C 1UF 10V		
		C9129	F1G1A105A047	C 1UF 10V		
		C9132	F1G1A105A047	C 1UF 10V		
		C9133	F1G1A105A047	C 1UF 10V		
		C9136	F1G1A105A047	C 1UF 10V		
		C9137	F1G1A105A047	C 1UF 10V		
		C9150	F1J1A475A112	C 4.7UF, 10V		
		C9151	F1G1E682A144	C 6800 pF 25 V		
		C9152	F1G1C104A146	C 0.1UF 16V		

Model No. : TH-48AX670S Parts List

Change	Safety	Ref. No.	Part No.	Part Name & Description	Q'ty	Remarks
		C9153	F1K1V106A010	C 10UF, 25V		
		C9154	F1K1V106A010	C 10UF, 25V		
		C9155	F1J0G2260001	C 22 UF 4 V		
		C9156	F1J0G2260001	C 22 UF 4 V		
		C9157	F1J0G2260001	C 22 UF 4 V		
		C9158	F1H1E104A161	C 0.1UF, 25V		
		C9160	F1K1V106A010	C 10UF, 25V		
		C9162	F1G1C104A146	C 0.1UF 16V		
		C9163	F1G1E153A144	C 0.015UF, 25V		
		C9165	F1G1E332A172	C 3300PF, 25V		
		C9166	F1J0G2260001	C 22 UF 4 V		
		C9167	F1J0G2260001	C 22 UF 4 V		
		C9170	F1K1V106A010	C 10UF, 25V		
		C9172	F1G1C104A146	C 0.1UF 16V		
		C9173	F1G1E153A144	C 0.015UF, 25V		
		C9175	F1G1E332A172	C 3300PF, 25V		
		C9176	F1J0G2260001	C 22 UF 4 V		
		C9177	F1J0G2260001	C 22 UF 4 V		
		C9200	F1G1H102A459	C 1000PF, 50V		
		C9201	F1G1C104A146	C 0.1UF 16V		
		C9202	F1G1C104A146	C 0.1UF 16V		
		C9203	F1G1H102A459	C 1000PF, 50V		
		C9204	F1G1C104A146	C 0.1UF 16V		
		C9205	F1G1H102A459	C 1000PF, 50V		
		C9206	F1G1H102A459	C 1000PF, 50V		
		C9207	F1G1C104A146	C 0.1UF 16V		
		C9208	F1G1C104A146	C 0.1UF 16V		
		C9209	F1G1H102A459	C 1000PF, 50V		
		C9210	F1G1C104A146	C 0.1UF 16V		
		C9211	F1G1H102A459	C 1000PF, 50V		
		C9400	F1G1H8R0A833	C 8PF , 50V		
		C9401	F1G1H8R0A833	C 8PF , 50V		
		C9515	F1G1C103A173	C 0.01UF, 25V		
		C9605	F1G1C104A146	C 0.1UF 16V		
DIODES						
		D2230	B0JCCE000021	DIODE		
		D2800	DZ2J056M0L	DIODE		
		D2802	B3AGB0000083	LED		
		D2851	DZ2J068M0L	DIODE		
		D2852	DZ2J068M0L	DIODE		
		D3021	DZ2J140M0L	DIODE		
		D3022	DZ2J140M0L	DIODE		
		D3023	DZ2J140M0L	DIODE		
		D3024	DZ2J140M0L	DIODE		
		D3025	DZ2J140M0L	DIODE		
		D3026	DZ2J140M0L	DIODE		
		D3101	K7AAAY000014	DIODE		
		D4601	B0ACRC000001	DIODE		
		D4723	DZ2J056M0L	DIODE		
		D4724	DZ2J056M0L	DIODE		
		D4761	DZ2J056M0L	DIODE		
		D4773	B0JCED000012	B0JCCE000021, B0JCCD000020		
		D5172	DZ2J180M0L	DIODE		
		D5173	DA2J10100L	DIODE		
		D5178	DZ2J100M0L	DIODE		
		D5180	DZ2J033M0L	DIODE		
		D5188	B0ADCK000001	DIODE		
		D6750	J0ZZB0000175	DIODE		
		D6752	B0ZBZ0000226	DIODE		
	⚠	D7101	ERZE08C621CD	SURGE ABSORBER		
		D7102	B0FBBR000104	DIODE		
		D7104	B0AAMT000014	DIODE		

Model No. : TH-48AX670S Parts List

Change	Safety	Ref. No.	Part No.	Part Name & Description	Q'ty	Remarks
		D7105	B0AAMT000014	DIODE		
		D7211	B0ACCD000008	DIODE		
		D7216	B0HASR000018	DIODE		
		D7221	B0ACCD000008	DIODE		
		D7301	DZ2J039M0L	DIODE		
		D7302	B0HAGQ000001	DIODE		
		D7303	DZ2J039M0L	DIODE		
		D7304	B0HAGQ000001	DIODE		
		D7305	B0ACCD000008	DIODE		
		D7306	B0BC027A0336	DIODE		
		D7307	B0BC027A0336	DIODE		
		D7308	B0BC027A0336	DIODE		
		D7309	ERZE08C621CD	SURGE ABSORBER		
		D7310	B0ADCK000001	DIODE		
		D7311	B0BC027A0336	DIODE		
		D7312	B0JCMG000043	DIODE		
		D7313	B0JCMG000043	DIODE		
		D7400	DA2J10100L	DIODE		
		D7403	B0JBSL000046	DIODE		
		D7404	DA2J10100L	DIODE		
		D7405	B0ACCD000008	DIODE		
		D7407	B0JBSL000046	DIODE		
		D7411	B0ACCD000008	DIODE		
		D7412	B0JBSJ000008	DIODE		
		D7413	B0JBSJ000008	DIODE		
		D7502	B0JCPE000051	DB2J41100L		
		D7810	B0ACCD000008	DIODE		
		D7811	B0ECKM000053	DIODE		
		D7813	B0ECKM000053	DIODE		
		D7814	B0ACCD000008	DIODE		
		D7815	B0JBSL000081	DIODE		
		D7816	B0JBSL000081	DIODE		
		D8710	B0ACGM000001	DIODE		
INTEGRATED CIRCUITS						
		IC2251	C1ZBZ0004368	IC		
		IC3700	C1AB00003469	IC		
		IC3701	C0DBGYY00887	IC		
		IC4500	MN7S503	IC		
		IC4601	C0DBAYY01299	IC		
		IC4602	C0DBEYY00226	IC		
		IC4780	C0JBAR000432	IC		
		IC4900	C1AB00003984	IC		
		IC5000	AN34043AAVF	IC		
		IC5702	C0DBAYY01656	IC		
		IC5704	C0DBEYY00102	IC		
		IC6750	C1AB00004172	IC		
		IC6751	C1AB00004174	IC		
		IC6800	C1AB00004028	IC		
		IC7201	C0DBBYY00058	IC		
		IC7301	C0DBAYY01329	IC		
		IC7401	C0DBZYY00531	IC		
		IC7503	C0DBAYY02003	IC		
		IC7800	C0ZBZ0002164	IC		
		IC7801	C0ZBZ0001936	IC		
		IC8000	MN2WS0280PK	IC		
		IC8100	NN30332A-VB	IC		
		IC8101	C0DBAYY01644	IC		
		IC8200	C3ABUY000055	C3ABUY000056		
		IC8201	C3ABUY000055	C3ABUY000056		
		IC8202	C3ABVY000025	C3ABVY000026		
		IC8601	C1CB00004168	IC		
		IC8602	C0DBZYY00723	IC		

Model No. : TH-48AX670S Parts List

Change	Safety	Ref. No.	Part No.	Part Name & Description	Q'ty	Remarks
		IC8603	C0DBZYY00723	IC		
		IC8607	C0DBZYY00723	IC		
		IC8650	C1CB00003736	IC		
		IC8660	C0DBEYY00102	IC		
		IC8700	C0DBAYY01299	IC		
		IC8710	C0DBAYY01647	IC		
		IC8720	C0DBZYY00544	IC		
		IC8750	C0DBGYY00887	IC		
		IC8901	C3EBGY000057	C3EBGY000056		
		IC8903	TVRT756AB	ROM VERSION ASSEMBLY		
		IC9000	C1AB00004293	IC		
		IC9150	C0DBAYY01646	IC		
		IC9160	C0DBAYY01644	IC		
		IC9170	C0DBAYY01644	IC		
		IC9200	C3ABTY000091	C3ABTY000076		
		IC9201	C3ABTY000091	C3ABTY000076		
		IC9202	C3ABTY000091	C3ABTY000076		
		IC9203	C3ABTY000091	C3ABTY000076		
		IC9600	TVRT759AB	NVT SOFTWARE		
COIL						
		L2200	J0JYC0000464	BEAD CORE		
		L4502	J0JYC0000686	BEAD CORE		
		L4503	J0JYC0000464	BEAD CORE		
		L4504	J0JYC0000686	BEAD CORE		
		L4505	J0JYC0000686	BEAD CORE		
		L4506	J0JYC0000464	BEAD CORE		
		L4507	J0JYC0000686	BEAD CORE		
		L4508	J0JYC0000686	BEAD CORE		
		L4509	J0JYC0000686	BEAD CORE		
		L4510	J0JHC0000047	BEAD C0RE		
		L4601	J0JYC0000464	BEAD CORE		
		L4602	G1C2R2MA0464	INDUCTOR		
		L4901	G1C220MA0533	INDUCTOR		
		L4902	G1C220MA0533	INDUCTOR		
		L4903	G1C220MA0533	INDUCTOR		
		L4904	G1C220MA0533	INDUCTOR		
		L5700	G1C2R2MA0464	INDUCTOR		
		L5701	J0JYC0000464	BEAD CORE		
		L6704	J0JYC0000464	BEAD CORE		
		L6706	J0JYC0000464	BEAD CORE		
		L6760	J0JYC0000464	BEAD CORE		
		L6761	J0JYC0000464	BEAD CORE		
		L6763	G1CR27JA0097	COIL		
		L6765	G1C82NJ00010	COIL		
		L6772	G1CR27JA0097	COIL		
		L6773	G1CR27JA0097	COIL		
		L6774	G1CR27JA0097	COIL		
		L6775	G1CR22JA0097	COIL		
		L6776	G1CR27JA0097	COIL		
		L6777	G1CR22JA0097	COIL		
		L6778	G1CR22JA0097	COIL		
		L6779	G1CR22JA0097	COIL		
		L6780	G1CR27JA0097	COIL		
		L6781	G1CR47J00012	BEAD COIL		
		L6801	J0JYC0000464	BEAD CORE		
		L6804	J0JYC0000464	BEAD CORE		
		L7201	J0JYA0000035	BEAD CORE		
		L7205	J0JYA0000035	BEAD CORE		
		L7207	J0JHC0000075	BEAD CORE		
		L7208	J0JHC0000075	BEAD CORE		
		L7502	G0C270MA0049	INDUCTOR		
		L7800	G4DYA0000602	TRANSFORMER		

Model No. : TH-48AX670S Parts List

Change	Safety	Ref. No.	Part No.	Part Name & Description	Q'ty	Remarks
		L7804	J0JHC0000075	BEAD CORE		
		L7805	J0JHC0000075	BEAD CORE		
		L7807	J0JHC0000075	BEAD CORE		
		L7808	J0JHC0000075	BEAD CORE		
		L8001	J0JYC0000464	BEAD CORE		
		L8002	J0JYC0000686	BEAD CORE		
		L8003	J0JYC0000686	BEAD CORE		
		L8100	G1C1R0M00022	INDUCTOR		
		L8101	G1C3R3MA0464	INDUCTOR		
		L8102	J0JYC0000686	BEAD CORE		
		L8602	J0ZZB0000142	FILTER		
		L8603	J0ZZB0000142	FILTER		
		L8605	J0JYC0000464	BEAD CORE		
		L8606	J0JYC0000464	BEAD CORE		
		L8607	J0JYC0000464	BEAD CORE		
		L8608	J0JYC0000464	BEAD CORE		
		L8610	J0JYC0000464	BEAD CORE		
		L8615	J0ZZB0000142	FILTER		
		L8700	G1C4R7ZA0311	INDUCTOR		
		L8710	G1C3R3ZA0388	INDUCTOR		
		L8720	G1C3R3ZA0388	INDUCTOR		
		L8902	J0JYC0000464	BEAD CORE		
		L8903	J0JYC0000464	BEAD CORE		
		L9083	J0JYC0000686	BEAD CORE		
		L9110	J0JYC0000686	BEAD CORE		
		L9150	G1C1R0M00022	INDUCTOR		
		L9160	G1C3R3MA0464	INDUCTOR		
		L9170	G1C6R8MA0464	INDUCTOR		
TRANSISTOR						
		Q2210	B1ABCF000231	TRANSISTOR		
		Q2211	B1ABCF000231	TRANSISTOR		
		Q4700	B1ABCF000231	TRANSISTOR		
		Q4701	B1ABCF000231	TRANSISTOR		
		Q4750	B1ABCF000231	TRANSISTOR		
		Q7201	B1CERR000096	TRANSISTOR		
		Q7202	B1ADGE000012	TRANSISTOR		
		Q7203	B1CERR000096	TRANSISTOR		
		Q7204	B1ADGE000012	TRANSISTOR		
		Q7301	B1CERR000096	TRANSISTOR		
		Q7302	B1CERR000096	TRANSISTOR		
		Q7303	B1ADCE000022	TRANSISTOR		
		Q7401	B1CFJD000007	TRANSISTOR		
		Q7402	B1CFRG000069	TRANSISTOR		
		Q7403	B1CHRE000034	TRANSISTOR		
		Q7404	B1CFRG000069	TRANSISTOR		
		Q7405	B1CHRE000034	TRANSISTOR		
		Q7406	B1CFJD000007	TRANSISTOR		
		Q7407	B1ADCE000022	TRANSISTOR		
		Q7800	B1ABCF000231	TRANSISTOR		
		Q7801	B1CERM000047	TRANSISTOR		
		Q7802	B1ACRL000015	TRANSISTOR		
		Q7804	B1ACRL000015	TRANSISTOR		
		Q7805	B1ACRL000015	TRANSISTOR		
		Q7806	B1ACRL000015	TRANSISTOR		
		Q7807	B1ABCF000231	TRANSISTOR		
		Q7808	B1ABCN000007	TRANSISTOR		
		Q7809	B1ACRL000015	TRANSISTOR		
		Q7810	B1CERM000047	TRANSISTOR		
		Q7812	B1CBHG000002	TRANSISTOR		
		Q7813	B1CFJD000007	TRANSISTOR		
		Q7814	B1ABCF000231	TRANSISTOR		
		Q7815	B1ACRL000015	TRANSISTOR		

Model No. : TH-48AX670S Parts List

Change	Safety	Ref. No.	Part No.	Part Name & Description	Q'ty	Remarks
		Q8721	B1CFRD000100	TRANSISTOR		
		Q8722	B1CFRD000100	TRANSISTOR		
		Q9150	B1CFRD000100	TRANSISTOR		
		Q9151	B1CFRD000100	TRANSISTOR		
RESISTORS						
		R066	D0GAR00J0005	M 0 OHM, 1/16W		
		R0902	D0GA473JA039	M 47K OHM, J,1/16W		
		R0905	D0GA272JA023	M 2.7KOHM, J.1/16W		
		R0906	D0GA272JA023	M 2.7KOHM, J.1/16W		
		R0909	D0GA272JA023	M 2.7KOHM, J.1/16W		
		R0910	D0GA272JA023	M 2.7KOHM, J.1/16W		
		R0911	D1H83324A042	NETWORK RESISTOR		
		R0912	D0GA101JA039	M 100 OHM ,J, 1/10W		
		R0913	D0GA101JA039	M 100 OHM ,J, 1/10W		
		R093	D0GAR00J0005	M 0 OHM, 1/16W		
		R0930	D0GA470JA023	M 47 OHM, J,1/16W		
		R0931	D0GA473JA039	M 47K OHM, J,1/16W		
		R0940	D0GA470JA023	M 47 OHM, J,1/16W		
		R0945	D0GA470JA023	M 47 OHM, J,1/16W		
		R0946	D0GA470JA023	M 47 OHM, J,1/16W		
		R0952	D0GA102JA039	M 1KOHM ,J, 1/10W		
		R0953	D0GA101JA039	M 100 OHM ,J, 1/10W		
		R0954	D0GA101JA039	M 100 OHM ,J, 1/10W		
		R0961	D0GA272JA023	M 2.7KOHM, J.1/16W		
		R0962	D0GA272JA023	M 2.7KOHM, J.1/16W		
		R0963	D0GA220JA023	M22 OHM, J.1/16 W		
		R0964	D0GA220JA023	M22 OHM, J.1/16 W		
		R0965	D0GA470JA023	M 47 OHM, J,1/16W		
		R0966	D0GA470JA023	M 47 OHM, J,1/16W		
		R0967	D0GA470JA023	M 47 OHM, J,1/16W		
		R0968	D0GA470JA023	M 47 OHM, J,1/16W		
		R0969	D0GA470JA023	M 47 OHM, J,1/16W		
		R0970	D0GAR00J0005	M 0 OHM, 1/16W		
		R0971	D0GAR00J0005	M 0 OHM, 1/16W		
		R2004	D0GA103JA039	M 10K OHM J 1/10W		
		R2007	D0GA101JA039	M 100 OHM ,J, 1/10W		
		R2008	D0GA103JA039	M 10K OHM J 1/10W		
		R2010	D1BA7151A023	M 7.15KOHM, F 1/16 W		
		R2011	D0GA102JA039	M 1KOHM ,J, 1/10W		
		R2014	D0GA472JA023	M 4.7KOHM, J,1/16W		
		R2015	D0GA680JA023	M 68 OHM, J,1/16W		
		R2017	D0GA103JA039	M 10K OHM J 1/10W		
		R2040	D0GA473JA039	M 47K OHM, J,1/16W		
		R2051	D0GA680JA023	M 68 OHM, J,1/16W		
		R2052	D0GA680JA023	M 68 OHM, J,1/16W		
		R2100	D0GA103JA039	M 10K OHM J 1/10W		
		R2117	D0GA473JA039	M 47K OHM, J,1/16W		
		R2150	D0GA680JA023	M 68 OHM, J,1/16W		
		R2151	D0GA680JA023	M 68 OHM, J,1/16W		
		R2152	D0GA680JA023	M 68 OHM, J,1/16W		
		R2153	D0GA680JA023	M 68 OHM, J,1/16W		
		R2154	D0GA680JA023	M 68 OHM, J,1/16W		
		R2155	D0GA680JA023	M 68 OHM, J,1/16W		
		R2156	D0GA680JA023	M 68 OHM, J,1/16W		
		R2160	D0GA103JA039	M 10K OHM J 1/10W		
		R2161	D0GA103JA039	M 10K OHM J 1/10W		
		R2162	D0GA103JA039	M 10K OHM J 1/10W		
		R2163	D0GA103JA039	M 10K OHM J 1/10W		
		R2164	D0GA103JA039	M 10K OHM J 1/10W		
		R2165	D0GA103JA039	M 10K OHM J 1/10W		
		R2166	D0GA103JA039	M 10K OHM J 1/10W		
		R2230	D0GA102JA039	M 1KOHM ,J, 1/10W		

Model No. : TH-48AX670S Parts List

Change	Safety	Ref. No.	Part No.	Part Name & Description	Q'ty	Remarks
		R2240	D0GA103JA039	M 10K OHM J 1/10W		
		R2251	D0GA103JA039	M 10K OHM J 1/10W		
		R2263	D0GA470JA023	M 47 OHM, J,1/16W		
		R2264	D0GA470JA023	M 47 OHM, J,1/16W		
		R2267	D0GAR00J0005	M 0 OHM, 1/16W		
		R2268	D0GAR00J0005	M 0 OHM, 1/16W		
		R2273	D0GA103JA039	M 10K OHM J 1/10W		
		R2274	D0GA473JA039	M 47K OHM, J,1/16W		
		R2275	D0GAR00J0005	M 0 OHM, 1/16W		
		R2276	D0GA223JA023	M 22K OHM J 1/16W		
		R2277	D0GA473JA039	M 47K OHM, J,1/16W		
		R2278	D0GAR00J0005	M 0 OHM, 1/16W		
		R2804	D0GBR00J0004	M 0 OHM J 1/10W		
		R2807	D0GBR00J0004	M 0 OHM J 1/10W		
		R2820	D0GB470JA065	M 47 OHM,J,1/10W		
		R2821	D0GB332JA065	M 3.3KOHM,J,1/10W		
		R2822	D0GD104JA052	M 100KOHM,J,1/8W		
		R2823	D1BB4301A073	M 4.3KOHM ,J, 1/16W		
		R2824	D1BB1001A073	M 1KOHM ,J, 1/10W		
		R2852	D1BD1911A203	M 1.91KOHM ,J, 1/16W		
		R2853	D1BD3091A203	M 3.09KOHM ,J, 1/16W		
		R2854	D1BD6041A203	M 6.04KOHM ,J, 1/16W		
		R2855	D1BD1692A203	M 16.9KOHM ,J, 1/16W		
		R3012	D1BD75R0A204	M 75OHM ,J, 1/16W		
		R3013	D1BD75R0A204	M 75OHM ,J, 1/16W		
		R3014	D1BD75R0A204	M 75OHM ,J, 1/16W		
		R3015	D1HY2204A012	NETWORK RESISTER		
		R3038	D1BA1403A023	M 140 KOHM,F.1/16 W		
		R3053	D0GA333JA023	M 33KOHM,J,1/16W		
		R3054	D0GA333JA023	M 33KOHM,J,1/16W		
		R3056	D1BA1403A023	M 140 KOHM,F.1/16 W		
		R3058	D0GA101JA039	M 100 OHM ,J, 1/10W		
		R3064	D0GAR00J0005	M 0 OHM, 1/16W		
		R3117	D0GA102JA039	M 1KOHM ,J, 1/10W		
		R3118	D0GA102JA039	M 1KOHM ,J, 1/10W		
		R3301	D0GA473JA039	M 47K OHM, J,1/16W		
		R3701	D0GA470JA023	M 47 OHM, J,1/16W		
		R3703	D0GA470JA023	M 47 OHM, J,1/16W		
		R3704	D0GA470JA023	M 47 OHM, J,1/16W		
		R3705	D0GA470JA023	M 47 OHM, J,1/16W		
		R3706	D0GA470JA023	M 47 OHM, J,1/16W		
		R3708	D0GA392JA023	M 3.9KOHM, J,1/16W		
		R3709	D0GA121JA023	M 120 OHM, J,1/16W		
		R3713	D0GA470JA023	M 47 OHM, J,1/16W		
		R3721	D0GA473JA039	M 47K OHM, J,1/16W		
		R3722	D0GA473JA039	M 47K OHM, J,1/16W		
		R3725	D0GA473JA039	M 47K OHM, J,1/16W		
		R3728	D0GA470JA023	M 47 OHM, J,1/16W		
		R3729	D0GA470JA023	M 47 OHM, J,1/16W		
		R3731	D0GA152JA023	M 1.5KOHM, J,1/16W		
		R3732	D0GA152JA023	M 1.5KOHM, J,1/16W		
		R3743	D0GA470JA023	M 47 OHM, J,1/16W		
		R3744	D0GA470JA023	M 47 OHM, J,1/16W		
		R4000	D1H8R0040016	NETWORK RESISTER		
		R4001	D1H8R0040016	NETWORK RESISTER		
		R4002	D1H8R0040016	NETWORK RESISTER		
		R4003	D1H8R0040016	NETWORK RESISTER		
		R4004	D1H8R0040016	NETWORK RESISTER		
		R4005	D1H8R0040016	NETWORK RESISTER		
		R4030	D0GA103JA039	M 10K OHM J 1/10W		
		R4031	D0GA103JA039	M 10K OHM J 1/10W		
		R4034	D0GA101JA039	M 100 OHM ,J, 1/10W		

Model No. : TH-48AX670S Parts List

Change	Safety	Ref. No.	Part No.	Part Name & Description	Q'ty	Remarks
		R4035	D0GA101JA039	M 100 OHM ,J, 1/10W		
		R4046	D0GAR00J0005	M 0 OHM, 1/16W		
		R4047	D0GAR00J0005	M 0 OHM, 1/16W		
		R4050	D0GA103JA039	M 10K OHM J 1/10W		
		R4051	D0GA103JA039	M 10K OHM J 1/10W		
		R4054	D0GAR00J0005	M 0 OHM, 1/16W		
		R4060	D0GAR00J0005	M 0 OHM, 1/16W		
		R4061	D0GAR00J0005	M 0 OHM, 1/16W		
		R4501	D0GA470JA023	M 47 OHM, J,1/16W		
		R4502	D0GA470JA023	M 47 OHM, J,1/16W		
		R4504	D0GA103JA039	M 10K OHM J 1/10W		
		R4506	D0GA103JA039	M 10K OHM J 1/10W		
		R4508	D0GA103JA039	M 10K OHM J 1/10W		
		R4509	D0GA101JA039	M 100 OHM ,J, 1/10W		
		R4511	D0GA472JA023	M 4.7KOHM, J,1/16W		
		R4512	D0GA472JA023	M 4.7KOHM, J,1/16W		
		R4513	D0GA472JA023	M 4.7KOHM, J,1/16W		
		R4514	D0GA472JA023	M 4.7KOHM, J,1/16W		
		R4515	D0GA472JA023	M 4.7KOHM, J,1/16W		
		R4516	D0GA472JA023	M 4.7KOHM, J,1/16W		
		R4517	D0GA472JA023	M 4.7KOHM, J,1/16W		
		R4518	D0GA682JA023	M 6.8KOHM, J,1/16W		
		R4519	D0GA473JA039	M 47K OHM, J,1/16W		
		R4520	D0GA470JA023	M 47 OHM, J,1/16W		
		R4524	D1H86804A042	M 68 OHM, J,1/16W		
		R4525	D1BA5100A023	M 510 OHM,F 1/16 W		
		R4526	D0GAR00J0005	M 0 OHM, 1/16W		
		R4527	D0GAR00J0005	M 0 OHM, 1/16W		
		R4528	D0GA105JA023	M 1M OHM, J,1/16W		
		R4529	D0GA103JA039	M 10K OHM J 1/10W		
		R4530	D0GA103JA039	M 10K OHM J 1/10W		
		R4611	D1BA4701A023	M 4.7KOHM,F 1/16 W		
		R4612	D1BA1502A023	M 15K OHM J 1/10W		
		R4613	D0GA103JA039	M 10K OHM J 1/10W		
		R4620	D1BA4701A023	M 4.7KOHM,F 1/16 W		
		R4621	D1BA2491A023	M 2.49KOHM,F,1/16W		
		R4622	D0GA822JA023	M8.2KOHM, J,1/16W		
		R4624	D0GA103JA039	M 10K OHM J 1/10W		
		R4700	D0GA103JA039	M 10K OHM J 1/10W		
		R4701	D0GA103JA039	M 10K OHM J 1/10W		
		R4702	D0GA103JA039	M 10K OHM J 1/10W		
		R4703	D0GA103JA039	M 10K OHM J 1/10W		
		R4705	D0GA102JA039	M 1KOHM ,J, 1/10W		
		R4706	D0GA470JA023	M 47 OHM, J,1/16W		
		R4711	D0GA103JA039	M 10K OHM J 1/10W		
		R4712	D0GA103JA039	M 10K OHM J 1/10W		
		R4713	D0GA103JA039	M 10K OHM J 1/10W		
		R4715	D0GA102JA039	M 1KOHM ,J, 1/10W		
		R4717	D0GA473JA039	M 47K OHM, J,1/16W		
		R4718	D0GA473JA039	M 47K OHM, J,1/16W		
		R4720	D0GA473JA039	M 47K OHM, J,1/16W		
		R4721	D0GA473JA039	M 47K OHM, J,1/16W		
		R4723	D1BA82R0A023	M 82OHM ,J, 1/16W		
		R4724	D0GA103JA039	M 10K OHM J 1/10W		
		R4751	D0GA103JA039	M 10K OHM J 1/10W		
		R4752	D0GA103JA039	M 10K OHM J 1/10W		
		R4753	D0GA103JA039	M 10K OHM J 1/10W		
		R4755	D0GA102JA039	M 1KOHM ,J, 1/10W		
		R4757	D0GA473JA039	M 47K OHM, J,1/16W		
		R4758	D0GA473JA039	M 47K OHM, J,1/16W		
		R4759	D0GA470JA023	M 47 OHM, J,1/16W		
		R4760	D0GA470JA023	M 47 OHM, J,1/16W		

Model No. : TH-48AX670S Parts List

Change	Safety	Ref. No.	Part No.	Part Name & Description	Q'ty	Remarks
		R4782	D0GA103JA039	M 10K OHM J 1/10W		
		R4783	D0GA470JA023	M 47 OHM, J,1/16W		
		R4784	D1BA82R0A023	M 82OHM ,J, 1/16W		
		R4787	D1BA56R0A023	M 56 OHM,F.1/16 W		
		R4798	D0GA273JA023	M 27K OHM J ,1/16W		
		R4900	D0GA103JA039	M 10K OHM J 1/10W		
		R4901	D0GFR00J0005	M 0 OHM,J,1/3W		
		R4902	D1H86804A042	M 68OHM ,J, 1/16W		
		R4903	D0GA102JA039	M 1KOHM ,J, 1/10W		
		R4904	D0GA102JA039	M 1KOHM ,J, 1/10W		
		R4909	D0GA103JA039	M 10K OHM J 1/10W		
		R4910	D0GA473JA039	M 47K OHM, J,1/16W		
		R4913	D0GA102JA039	M 1KOHM ,J, 1/10W		
		R5002	D0GA683JA023	M 68KOHM, J,1/16W		
		R5003	D0GA103JA039	M 10K OHM J 1/10W		
		R5006	D0GA623JA023	M 62KOHM ,J, 1/10W		
		R5007	D0GA243JA023	M 24K OHM J 0.063W		
		R5009	D1BA5602A023	M 56KOHM,F. 1/16 W		
		R5012	D1BA2202A023	M 22KOHM,F. 1/16 W		
		R5018	D0GA182JA023	M 1.8KOHM, J,0.063W		
		R5030	D0GA103JA039	M 10K OHM J 1/10W		
		R5100	D0GA101JA039	M 100 OHM ,J, 1/10W		
		R5101	D0GA473JA039	M 47K OHM, J,1/16W		
		R5102	D0GA473JA039	M 47K OHM, J,1/16W		
		R5104	D0GA103JA039	M 10K OHM J 1/10W		
		R5152	D0GA272JA023	M 2.7KOHM, J.1/16W		
		R5174	D0GA103JA039	M 10K OHM J 1/10W		
		R5175	D0GA681JA023	M680 OHM, J,1/16W		
		R5176	D0GB101JA065	M 100 OHM,J,1/10W		
		R5707	D0GBR00J0004	M 0 OHM J 1/10W		
		R5715	D1BA1502A023	M 15K OHM J 1/10W		
		R5716	D1BA6041A023	M 6.04KOHM,F.1/16 W		
		R5717	D0GA123JA023	M 12K OHM J 1/16W		
		R5731	D1BA1200A023	M 120 OHM,F.1/16 W		
		R5732	D1BA56R0A023	M 56 OHM,F.1/16 W		
		R5736	D0GA103JA039	M 10K OHM J 1/10W		
		R6712	D0GA221JA023	M220 OHM, J.1/16 W		
		R6720	D0GA221JA023	M220 OHM, J.1/16 W		
		R6721	D0GA221JA023	M220 OHM, J.1/16 W		
		R6734	D0GA103JA039	M 10K OHM J 1/10W		
		R6750	D0GA101JA039	M 100 OHM ,J, 1/10W		
		R6751	D0GA103JA039	M 10K OHM J 1/10W		
		R6753	D0GA101JA039	M 100 OHM ,J, 1/10W		
		R6754	D0GA102JA039	M 1KOHM ,J, 1/10W		
		R6755	D0GA101JA039	M 100 OHM ,J, 1/10W		
		R6756	D0GA101JA039	M 100 OHM ,J, 1/10W		
		R6757	D0GA101JA039	M 100 OHM ,J, 1/10W		
		R6758	D0GA101JA039	M 100 OHM ,J, 1/10W		
		R6759	D0GA102JA039	M 1KOHM ,J, 1/10W		
		R6760	D0GA332JA023	M 3.3KOHM, J,1/16W		
		R6761	D0GAR00J0005	M 0 OHM, 1/16W		
		R6762	D0GA331JA023	M 330 OHM, J,1/16W		
		R6763	D0GA240JA023	M 24 OHM J 0.063W		
		R6764	D0GA681JA023	M680 OHM, J,1/16W		
		R6765	D0GA681JA023	M680 OHM, J,1/16W		
		R6766	D0GA102JA039	M 1KOHM ,J, 1/10W		
		R6804	D0GA471JA023	M 470OHM, J,1/16W		
		R6806	D0GA103JA039	M 10K OHM J 1/10W		
		R6809	D0GAR00J0005	M 0 OHM,J,1/3W		
		R6810	D0GAR00J0005	M 0 OHM, 1/16W		
		R6811	D0GAR00J0005	M 0 OHM, 1/16W		
		R6815	D0GA680JA023	M 68 OHM, J,1/16W		

Model No. : TH-48AX670S Parts List

Change	Safety	Ref. No.	Part No.	Part Name & Description	Q'ty	Remarks
		R6817	D0GA680JA023	M 68 OHM, J,1/16W		
		R6818	D0GAR00J0005	M 0 OHM, 1/16W		
		R6819	D0GAR00J0005	M 0 OHM, 1/16W		
		R6821	D0GA680JA023	M 68 OHM, J,1/16W		
		R6825	D0GA332JA023	M 3.3KOHM, J,1/16W		
		R6828	D0GA680JA023	M 68 OHM, J,1/16W		
		R6829	D0GA680JA023	M 68 OHM, J,1/16W		
		R6830	D0GA680JA023	M 68 OHM, J,1/16W		
		R6834	D0GA680JA023	M 68 OHM, J,1/16W		
		R6835	D0GA680JA023	M 68 OHM, J,1/16W		
		R6836	D0GA680JA023	M 68 OHM, J,1/16W		
		R6837	D0GA680JA023	M 68 OHM, J,1/16W		
		R6843	D0GBR00J0004	M 0 OHM, 1/16W		
		R6863	D0GAR00J0005	M 0 OHM, 1/16W		
		R6895	D0GA332JA023	M 3.3KOHM, J,1/16W		
		R6896	D0GA332JA023	M 3.3KOHM, J,1/16W		
		R6899	D0GA680JA023	M 68 OHM, J,1/16W		
	⚠	R7101	D0GF105JA048	M 1M OHM. 1/4W		
	⚠	R7102	D0GF105JA048	M 1M OHM. 1/4W		
	⚠	R7103	D0GF105JA048	M 1M OHM. 1/4W		
	⚠	R7104	D0GD102JA052	M 1.0KOHM,J,1/8W		
	⚠	R7105	D0GD102JA052	M 1.0KOHM,J,1/8W		
		R7201	ERX1SJR22V	M 0.22OHM ,J, 1W		
		R7202	ERX1SJR22V	M 0.22OHM ,J, 1W		
		R7203	D0GD104JA052	M 100KOHM,J,1/8W		
		R7204	D0GF820JA047	M 82OHM ,J, 1/16W		
		R7205	D0GD101JA052	M 100 OHM,J,1/8W		
		R7206	D0GF4R7JA048	M 4.7 OHM ,J, 1/16W		
		R7207	D0GB473JA065	M 47KOHM J. 1/10W		
		R7208	ERX1SJR22V	M 0.22OHM ,J, 1W		
		R7210	ERX1SJR22V	M 0.22OHM ,J, 1W		
		R7211	D0GB104JA065	M 100KOHM J 1/10W		
		R7212	D0GB683JA065	M 68KOHM J 1/10W		
		R7214	D0GF225JA048	M 2.2MOHM,J,1/8W		
		R7215	D0GF225JA048	M 2.2MOHM,J,1/8W		
		R7216	D0GF225JA048	M 2.2MOHM,J,1/8W		
		R7217	D0GF225JA048	M 2.2MOHM,J,1/8W		
		R7218	D0GD124JA052	M 120KOHM,J,1/8W		
		R7219	D0GB513JA065	M 51KOHM ,J, 1/16W		
		R7220	D0GB223JA065	M 22KOHM,J,1/10W		
		R7221	D1BF1504A073	M 1.5MOHM, J,1/16W		
		R7222	D1BF1504A073	M 1.5MOHM, J,1/16W		
		R7223	D1BF1504A073	M 1.5MOHM, J,1/16W		
		R7224	D1BD3603A066	M 360KOHM,F.1/8W		
		R7225	D1BD8203A066	M 820KOHM,F.1/8W		
		R7226	D1BD2003A066	M 200KOHM.F.1/8W		
		R7227	D1BD8203A066	M 820KOHM,F.1/8W		
		R7228	D1BF1504A073	M 1.5MOHM, J,1/16W		
		R7229	D0GD104JA052	M 100KOHM,J,1/8W		
		R7230	D1BD4422A066	M 44.2KOHM,F.1/8W		
		R7231	D1BD4303A066	M 430KOHM,F.1/8W		
		R7232	D0GD104JA052	M 100KOHM,J,1/8W		
		R7237	D0GF4R7JA048	M 4.7 OHM ,J, 1/16W		
		R7238	D0GB473JA065	M 47KOHM J. 1/10W		
		R7239	D0GF820JA047	M 82OHM ,J, 1/16W		
		R7302	D0GF391JA048	M 390 OHM. 1/3W		
		R7303	D0GF391JA048	M 390 OHM. 1/3W		
		R7304	D0GF4R7JA048	M 4.7OHM ,J, 1/16W		
		R7305	D0GF221JA047	M 220OHM ,J, 1/16W		
		R7306	D0GD222JA052	M 2.2KOHM,J,1/8W		
		R7307	D0GD562JA052	M 5.6 KOHM,J,1/8W		
		R7308	D0GD222JA052	M 2.2KOHM,J,1/8W		

Model No. : TH-48AX670S Parts List

Change	Safety	Ref. No.	Part No.	Part Name & Description	Q'ty	Remarks
		R7309	D1BD6801A066	M 6.8KOHM,F.1/8W		
		R7311	D0B1106JA033	M 10MOHM J 1W		
		R7312	D0GDR00J0004	M 0 OHM, 1/8W		
		R7314	D0GD104JA052	M 100KOHM,J,1/8W		
		R7315	D0GD222JA052	M 2.2KOHM,J,1/8W		
		R7317	D0GB473JA065	M 47KOHM J. 1/10W		
		R7320	D0GD473JA052	M 47KOHM,J,1/8W		
		R7321	D0GF220JA048	M 22 OHM. 1/4W		
		R7322	D0GF220JA048	M 22 OHM. 1/4W		
		R7323	D0GB103JA065	M 10K OHM J 1/10W		
		R7324	D0GB103JA065	M 10K OHM J 1/10W		
		R7326	D0GD223JA052	M 22KOHM,J,1/8W		
		R7327	D0GF391JA048	M 390 OHM. 1/3W		
		R7387	D0GF4R7JA048	M 4.7 OHM ,J, 1/16W		
		R7397	D1BD1802A066	M 18KOHM,F.1/8W		
		R7399	D0GF221JA047	M 220 OHM ,J, 1/16W		
		R7401	D0GB472JA065	M 4.7KOHM, J,1/10W		
		R7402	D0GB103JA065	M 10K OHM J 1/10W		
		R7403	D0GB102JA065	M 1KOHM,J,1/10W		
		R7404	D0GB224JA065	M 220KOHM,J,1/10W		
		R7405	D0GD222JA052	M 2.2KOHM,J,1/8W		
		R7406	D1BB3301A143	M 3.3KOHM, J,1/16W		
		R7407	D0GB223JA065	M 22KOHM,J,1/10W		
		R7408	D1BB1742A106	M17.4KOHM ,J, 1/16W		
		R7409	D0GD104JA052	M 100KOHM,J,1/8W		
		R7410	D0GB153JA065	M 15K OHM J 1/10W		
		R7411	D0GB224JA065	M 220KOHM,J,1/10W		
		R7412	D0GB153JA065	M 15K OHM J 1/10W		
		R7416	D0GD103JA052	M 10KOHM,J,1/8W		
		R7417	D0GD103JA052	M 10KOHM,J,1/8W		
		R7420	D0GB473JA065	M 47KOHM J. 1/10W		
		R7421	D0GD104JA052	M 100KOHM,J,1/8W		
		R7423	D0GF221JA048	M 220 OHM ,J, 1/16W		
		R7425	ERX1SJ1R0V	M 1OHM ,J, 1W		
		R7426	D0GB472JA065	M 4.7KOHM, J,1/10W		
		R7427	D0GB223JA065	M 22KOHM,J,1/10W		
		R7428	D0GD154JA052	M 150KOHM,J,1/8W		
		R7429	D0GD154JA052	M 150KOHM,J,1/8W		
		R7430	D0GB104JA065	M 100KOHM J 1/10W		
		R7431	D0GBR00J0004	M 0 OHM J 1/10W		
		R7432	D0GB100JA065	M 10 OHM J 1/10W		
		R7504	D0GD104JA052	M 100KOHM,J,1/8W		
		R7509	D0GD224JA052	M 220KOHM,J,1/8W		
		R7510	D0GB153JA065	M 15K OHM J 1/10W		
		R7511	D0GB153JA065	M 15K OHM J 1/10W		
		R7533	D1BB1503A143	M 150KOHM ,J, 1/16W		
		R7534	D1BB4752A193	M 47.5KOHM ,J, 1/16W		
		R7535	D0GD473JA052	M 47KOHM,J,1/8W		
		R7537	D0GB100JA065	M 10 OHM J 1/10W		
		R7800	D0GD103JA052	M 10KOHM,J,1/8W		
		R7801	D0GB473JA065	M 47KOHM J. 1/10W		
		R7802	D1BD2R40A066	M 2.4OHM ,J, 1/16W		
		R7803	D1BD2R40A066	M 2.4OHM ,J, 1/16W		
		R7804	D1BD2R40A066	M 2.4OHM ,J, 1/16W		
		R7806	D1BD2R40A066	M 2.4OHM ,J, 1/16W		
		R7807	D1BD2R40A066	M 2.4OHM ,J, 1/16W		
		R7808	D0GB103JA065	M 10K OHM J 1/10W		
		R7809	D1BB1203A143	M 120KOHM,J,1/8W		
		R7810	D1BD5602A203	M 56KOHM ,J, 1/16W		
		R7811	D0GB472JA065	M 4.7KOHM, J,1/10W		
		R7812	D1BB1503A143	M 150KOHM ,J, 1/16W		
		R7815	ERX1SJR22V	M0.22OHM ,J, 1W		

Model No. : TH-48AX670S Parts List

Change	Safety	Ref. No.	Part No.	Part Name & Description	Q'ty	Remarks
		R7816	ERX1SJR22V	M0.22OHM ,J, 1W		
		R7817	ERX1SJR22V	M0.22OHM ,J, 1W		
		R7818	ERX1SJR22V	M0.22OHM ,J, 1W		
		R7819	D0GD103JA052	M 10KOHM,J,1/8W		
		R7820	D1BB1403A143	M 140KOHM ,J, 1/16W		
		R7821	D1BB1002A143	M 10K OHM J 1/10W		
		R7822	D0GB184JA065	M 180KOHM J 1/10W		
		R7823	D0GB223JA065	M 22KOHM,J,1/10W		
		R7824	D0GD470JA059	M 47 OHM,J,1/4W		
		R7825	D0GB473JA065	M 47KOHM J. 1/10W		
		R7827	D0GD101JA052	M 100 OHM,J,1/8W		
		R7828	D0GBR00J0004	M 0 OHM J 1/10W		
		R7831	D0GB470JA065	M 47 OHM,J,1/10W		
		R7832	D0GB473JA065	M 47KOHM J. 1/10W		
		R7833	D1BD2R40A066	M 2.4OHM ,J, 1/16W		
		R7834	D0GB473JA065	M 47KOHM J. 1/10W		
		R7835	ERX1SJR22V	M0.22OHM ,J, 1W		
		R7836	D1BB1742A143	M 17.4KOHM ,J, 1/16W		
		R7837	D0GB101JA065	M 100 OHM,J,1/10W		
		R7838	D0GB470JA065	M 47 OHM,J,1/10W		
		R7839	D0GB473JA065	M 47KOHM J. 1/10W		
		R7841	D0GB473JA065	M 47KOHM J. 1/10W		
		R7842	D0GB473JA065	M 47KOHM J. 1/10W		
		R7843	D0GB473JA065	M 47KOHM J. 1/10W		
		R7844	ERG2SJ562V	M 5.6KOHM ,J, 1/10W		
		R7846	D0GB100JA065	M 10 OHM J 1/10W		
		R7847	D0GB100JA065	M 10 OHM J 1/10W		
		R7849	D0GB100JA065	M 10 OHM J 1/10W		
		R7850	D0GB100JA065	M 10 OHM J 1/10W		
		R7851	D0GB100JA065	M 10 OHM J 1/10W		
		R7852	D0GBR00J0004	M 0 OHM J 1/10W		
		R7853	D0GB104JA065	M 100KOHM J 1/10W		
		R7854	D0GD470JA059	M 47 OHM,J,1/4W		
		R7855	D1BD2R40A066	M 2.4OHM ,J, 1/16W		
		R7856	D0GB473JA065	M 47KOHM J. 1/10W		
		R7857	D1BB1403A143	M 140KOHM ,J, 1/16W		
		R7858	D0GB473JA065	M 47KOHM J. 1/10W		
		R7859	D0GD103JA052	M 10KOHM,J,1/8W		
		R7861	D0GB334JA065	M 330 OHM, J,1/16W		
		R7862	D1BD1003A203	M 100KOHM ,J, 1/16W		
		R7863	D0GB104JA065	M 100KOHM J 1/10W		
		R7864	D0GB104JA065	M 100KOHM J 1/10W		
		R7865	D1BD4302A203	M 43KOHM ,J, 1/16W		
		R7866	D1BB1742A143	M 17.4KOHM ,J, 1/16W		
		R7867	D0GB473JA065	M 47KOHM J. 1/10W		
		R7868	D0GB103JA065	M 10K OHM J 1/10W		
		R7869	D0GD473JA052	M 47KOHM,J,1/8W		
		R7872	D1BD2R40A066	M 2.4OHM ,J, 1/16W		
		R7873	D1BD2R40A066	M 2.4OHM ,J, 1/16W		
		R7877	D1BD2R40A066	M 2.4OHM ,J, 1/16W		
		R7878	D1BD2R40A066	M 2.4OHM ,J, 1/16W		
		R7879	D1BD2R40A066	M 2.4OHM ,J, 1/16W		
		R7881	D1BD2R40A066	M 2.4OHM ,J, 1/16W		
		R7882	D1BD2R40A066	M 2.4OHM ,J, 1/16W		
		R7884	D0GB100JA065	M 10 OHM J 1/10W		
		R7885	D1BD2R40A066	M 2.4OHM ,J, 1/16W		
		R7886	D1BD2R40A066	M 2.4OHM ,J, 1/16W		
		R7887	D1BD2R40A066	M 2.4OHM ,J, 1/16W		
		R7888	D1BD2R40A066	M 2.4OHM ,J, 1/16W		
		R7891	D1BD2R40A066	M 2.4OHM ,J, 1/16W		
		R7892	D1BD2R40A066	M 2.4OHM ,J, 1/16W		
		R7893	D1BD2R40A066	M 2.4OHM ,J, 1/16W		

Model No. : TH-48AX670S Parts List

Change	Safety	Ref. No.	Part No.	Part Name & Description	Q'ty	Remarks
		R7894	D1BD2R40A066	M 2.4OHM ,J, 1/16W		
		R7895	D1BD2R40A066	M 2.4OHM ,J, 1/16W		
		R7896	D1BD2R40A066	M 2.4OHM ,J, 1/16W		
		R7897	D1BD2R40A066	M 2.4OHM ,J, 1/16W		
		R7898	D1BD2R40A066	M 2.4OHM ,J, 1/16W		
		R7900	D1BD2R40A066	M 2.4OHM ,J, 1/16W		
		R7901	D1BD2R40A066	M 2.4OHM ,J, 1/16W		
		R7903	D1BD2R40A066	M 2.4OHM ,J, 1/16W		
		R7904	D1BD2R40A066	M 2.4OHM ,J, 1/16W		
		R7905	D1BD2R40A066	M 2.4OHM ,J, 1/16W		
		R7906	D1BD2R40A066	M 2.4OHM ,J, 1/16W		
		R7907	D1BD2R40A066	M 2.4OHM ,J, 1/16W		
		R7908	D1BD2R40A066	M 2.4OHM ,J, 1/16W		
		R7910	D1BD2R40A066	M 2.4OHM ,J, 1/16W		
		R7911	D1BD2R40A066	M 2.4OHM ,J, 1/16W		
		R7912	D1BD2R40A066	M 2.4OHM ,J, 1/16W		
		R7913	D1BD2R40A066	M 2.4OHM ,J, 1/16W		
		R8010	D0GA511JA023	M510 OHM, J,1/16W		
		R8012	D0GA1R1JA023	M 1.1OHM, J,1/16W		
		R8108	D1BA4701A023	M 4.7KOHM,F 1/16 W		
		R8109	D1BA2002A023	M 20KOHM ,J, 1/16W		
		R8110	D1BA1802A023	M 18KOHM,F. 1/16 W		
		R8200	D1BA2400A023	M 240 OHM,F.1/16 W		
		R8203	D1BA2400A023	M 240 OHM,F.1/16 W		
		R8206	D1BA2400A023	M 240 OHM,F.1/16 W		
		R8217	D0GA221JA023	M220 OHM, J.1/16 W		
		R8218	D0GA221JA023	M220 OHM, J.1/16 W		
		R8219	D1BA2400A023	M 240 OHM,F.1/16 W		
		R8220	D1BA2400A023	M 240 OHM,F.1/16 W		
		R8221	D0GA103JA039	M 10K OHM J 1/10W		
		R8230	D1BA2400A023	M 240 OHM,F.1/16 W		
		R8231	D1BA2400A023	M 240 OHM,F.1/16 W		
		R8232	D1BA2400A023	M 240 OHM,F.1/16 W		
		R8233	D1BA2400A023	M 240 OHM,F.1/16 W		
		R8234	D1BA2400A023	M 240 OHM,F.1/16 W		
		R8236	D1BA2400A023	M 240 OHM,F.1/16 W		
		R8239	D1BA2400A023	M 240 OHM,F.1/16 W		
		R8242	D0GA111JA023	M 110 OHM, J.1/16W		
		R8244	D1BA2400A023	M 240 OHM,F.1/16 W		
		R8245	D0GA103JA039	M 10K OHM J 1/10W		
		R8250	D1BA2400A023	M 240 OHM,F.1/16 W		
		R8251	D1BA2400A023	M 240 OHM,F.1/16 W		
		R8300	D0GA360JA023	M 36 OHM, J,1/16W		
		R8301	D0GA360JA023	M 36 OHM, J,1/16W		
		R8302	D0GA360JA023	M 36 OHM, J,1/16W		
		R8303	D1BA6201A023	M 6.2 KOHM,F.1/16 W		
		R8304	D0GA331JA023	M 330 OHM, J,1/16W		
		R8305	D1HY2204A012	M 22 OHM ,J, 1/16W		
		R8306	D1HY2204A012	M 22 OHM ,J, 1/16W		
		R8307	D1HY2204A012	M 22 OHM ,J, 1/16W		
		R8308	D1HY2204A012	M 22 OHM ,J, 1/16W		
		R8309	D1HY2204A012	M 22 OHM ,J, 1/16W		
		R8313	D1HY4704A012	M 47 OHM, J,1/16W		
		R8314	D1HY4704A012	M 47 OHM, J,1/16W		
		R8315	D1HY4704A012	M 47 OHM, J,1/16W		
		R8316	D1HY4704A012	M 47 OHM, J,1/16W		
		R8317	D1HY4704A012	M 47 OHM, J,1/16W		
		R8320	D0GA330JA023	M 33 OHM, J,1/16W		
		R8321	D0GA330JA023	M 33 OHM, J,1/16W		
		R8322	D0GA220JA023	M22 OHM, J.1/16 W		
		R8323	D0GA330JA023	M 33 OHM, J,1/16W		
		R8324	D0GA330JA023	M 33 OHM, J,1/16W		

Model No. : TH-48AX670S Parts List

Change	Safety	Ref. No.	Part No.	Part Name & Description	Q'ty	Remarks
		R8325	D0GA220JA023	M22 OHM, J.1/16 W		
		R8326	D0GA330JA023	M 33 OHM, J,1/16W		
		R8327	D0GA330JA023	M 33 OHM, J,1/16W		
		R8328	D0GA470JA023	M 47 OHM, J,1/16W		
		R8329	D0GA470JA023	M 47 OHM, J,1/16W		
		R8330	D0GA470JA023	M 47 OHM, J,1/16W		
		R8331	D0GA470JA023	M 47 OHM, J,1/16W		
		R8332	D0GA470JA023	M 47 OHM, J,1/16W		
		R8421	D0GA103JA039	M 10K OHM J 1/10W		
		R8422	D0GA103JA039	M 10K OHM J 1/10W		
		R8423	D0GA103JA039	M 10K OHM J 1/10W		
		R8447	D0GA103JA039	M 10K OHM J 1/10W		
		R8601	D1BA75R0A023	M 75.0 OHM,F.1/16 W		
		R8602	D1BA75R0A023	M 75.0 OHM,F.1/16 W		
		R8603	D1BA75R0A023	M 75.0 OHM,F.1/16 W		
		R8604	D1BA75R0A023	M 75.0 OHM,F.1/16 W		
		R8606	D1BA6200A023	M 620 OHM ,J, 1/16W		
		R8609	D0GA103JA039	M 10K OHM J 1/10W		
		R8610	D0GA103JA039	M 10K OHM J 1/10W		
		R8613	D0GA104JA039	M 100KOHM J 1/10W		
		R8614	D0GA103JA039	M 10K OHM J 1/10W		
		R8615	D0GAR00J0005	M 0 OHM, 1/16W		
		R8616	D0GA473JA039	M 47K OHM, J,1/16W		
		R8619	D0GAR00J0005	M 0 OHM, 1/16W		
		R8621	D0GA103JA039	M 10K OHM J 1/10W		
		R8622	D0GAR00J0005	M 0 OHM, 1/16W		
		R8623	D0GAR00J0005	M 0 OHM, 1/16W		
		R8624	D0GA470JA023	M 47 OHM, J,1/16W		
		R8625	D0GA470JA023	M 47 OHM, J,1/16W		
		R8626	D0GA470JA023	M 47 OHM, J,1/16W		
		R8627	D0GA470JA023	M 47 OHM, J,1/16W		
		R8628	D0GA470JA023	M 47 OHM, J,1/16W		
		R8629	D0GA470JA023	M 47 OHM, J,1/16W		
		R8630	D1H81034A042	NETWORK RESISTER		
		R8631	D0GA103JA039	M 10K OHM J 1/10W		
		R8632	D1H86804A042	NETWORK RESISTER		
		R8634	D1H86804A042	NETWORK RESISTER		
		R8636	D0GA220JA023	M22 OHM, J.1/16 W		
		R8637	D0GA272JA023	M 2.7KOHM, J.1/16W		
		R8639	D0GA103JA039	M 10K OHM J 1/10W		
		R8640	D0GA103JA039	M 10K OHM J 1/10W		
		R8641	D1H8R0040016	NETWORK RESISTER		
		R8643	D0GA272JA023	M 2.7KOHM, J.1/16W		
		R8645	D0GA272JA023	M 2.7KOHM, J.1/16W		
		R8650	D0GA472JA023	M 4.7KOHM, J,1/16W		
		R8651	D0GA152JA023	M 1.5KOHM, J,1/16W		
		R8652	D0GA103JA039	M 10K OHM J 1/10W		
		R8654	D0GA680JA023	M 68 OHM, J,1/16W		
		R8655	D0GA680JA023	M 68 OHM, J,1/16W		
		R8656	D0GA680JA023	M 68 OHM, J,1/16W		
		R8657	D0GA680JA023	M 68 OHM, J,1/16W		
		R8658	D0GA680JA023	M 68 OHM, J,1/16W		
		R8659	D0GA680JA023	M 68 OHM, J,1/16W		
		R8660	D0GA680JA023	M 68 OHM, J,1/16W		
		R8661	D0GA680JA023	M 68 OHM, J,1/16W		
		R8662	D0GA680JA023	M 68 OHM, J,1/16W		
		R8663	D0GA680JA023	M 68 OHM, J,1/16W		
		R8664	D0GA680JA023	M 68 OHM, J,1/16W		
		R8665	D0GA680JA023	M 68 OHM, J,1/16W		
		R8666	D0GA472JA023	M 4.7KOHM, J,1/16W		
		R8667	D1H8R0040016	NETWORK RESISTER		
		R8668	D0GA472JA023	M 4.7KOHM, J,1/16W		

Model No. : TH-48AX670S Parts List

Change	Safety	Ref. No.	Part No.	Part Name & Description	Q'ty	Remarks
		R8670	D1BA2491A023	M 2.49KOHM,F,1/16W		
		R8675	D1H81034A042	M 10K OHM J 1/10W		
		R8676	D1BB1200A143	M 120 OHM,F.1/16 W		
		R8677	D1BB2000A143	M 200 OHM ,J, 1/16W		
		R8678	D0GA680JA023	M 68 OHM, J,1/16W		
		R8679	D0GA473JA039	M 47K OHM, J,1/16W		
		R8680	D0GAR00J0005	M 0 OHM, 1/16W		
		R8681	D0GA472JA023	M 4.7KOHM, J,1/16W		
		R8683	D0GA472JA023	M 4.7KOHM, J,1/16W		
		R8684	D1BA2872A023	M 28.7KOHM ,J, 1/16W		
		R8692	D0GA473JA039	M 47K OHM, J,1/16W		
		R8693	D0GBR00J0004	M 0 OHM J 1/10W		
		R8694	D1BA1652A023	M 16.5KOHM ,J, 1/16W		
		R8696	D1BA2872A023	M 28.7KOHM ,J, 1/16W		
		R8697	D0GA103JA039	M 10K OHM J 1/10W		
		R8701	D0GA220JA023	M22 OHM, J.1/16 W		
		R8702	D0GA223JA023	M 22K OHM J 1/16W		
		R8703	D1BA6802A023	M 68 KOHM,F.1/16 W		
		R8704	D1BA2102A023	M 21KOHM,F,1/16W		
		R8711	D1BB7870A143	M 787 OHM ,J, 1/16W		
		R8712	D1BA2402A023	M 24KOHM,F,1/16W		
		R8713	D1BB4301A074	M 4.3KOHM ,J, 1/16W		
		R8721	D0GA473JA039	M 47K OHM, J,1/16W		
		R8723	D1BB1962A143	M 19.6KOHM ,J, 1/16W		
		R8724	D0GA102JA039	M 1KOHM ,J, 1/10W		
		R8725	D1BB1001A143	M 1KOHM ,J, 1/10W		
		R8726	D0GA472JA023	M 4.7KOHM, J,1/16W		
		R8727	D0GA392JA023	M 3.9KOHM, J,1/16W		
		R8728	D0GA104JA039	M 100KOHM J 1/10W		
		R8766	D0GAR00J0005	M 0 OHM, 1/16W		
		R8785	D0GA103JA039	M 10K OHM J 1/10W		
		R8788	D0GA102JA039	M 1KOHM ,J, 1/10W		
		R8802	D0GA103JA039	M 10K OHM J 1/10W		
		R8804	D0GA473JA039	M 47K OHM, J,1/16W		
		R8805	D0GA473JA039	M 47K OHM, J,1/16W		
		R8806	D0GA473JA039	M 47K OHM, J,1/16W		
		R8807	D0GA473JA039	M 47K OHM, J,1/16W		
		R8808	D0GA473JA039	M 47K OHM, J,1/16W		
		R8809	D0GA473JA039	M 47K OHM, J,1/16W		
		R8811	D0GA473JA039	M 47K OHM, J,1/16W		
		R8812	D0GA473JA039	M 47K OHM, J,1/16W		
		R8813	D0GA473JA039	M 47K OHM, J,1/16W		
		R8814	D0GA473JA039	M 47K OHM, J,1/16W		
		R8820	D0GA103JA039	M 10K OHM J 1/10W		
		R8821	D0GA103JA039	M 10K OHM J 1/10W		
		R8822	D0GA103JA039	M 10K OHM J 1/10W		
		R8831	D0GA103JA039	M 10K OHM J 1/10W		
		R8832	D0GA103JA039	M 10K OHM J 1/10W		
		R8859	D0GA103JA039	M 10K OHM J 1/10W		
		R8903	D0GA472JA023	M 4.7KOHM, J,1/16W		
		R8910	D0GA103JA039	M 10K OHM J 1/10W		
		R8912	D0GA103JA039	M 10K OHM J 1/10W		
		R8919	D0GA103JA039	M 10K OHM J 1/10W		
		R8920	D1H86804A042	NETWORK RESISTER		
		R8921	D1H86804A042	NETWORK RESISTER		
		R8922	D0GA680JA023	M 68 OHM, J,1/16W		
		R8923	D0GA680JA023	M 68 OHM, J,1/16W		
		R8924	D0GA220JA023	M22 OHM, J.1/16 W		
		R8925	D0GA103JA039	M 10K OHM J 1/10W		
		R9000	D0GAR00J0005	M 0 OHM, 1/16W		
		R9030	D0GAR00J0005	M 0 OHM, 1/16W		
		R9031	D0GAR00J0005	M 0 OHM, 1/16W		

Model No. : TH-48AX670S Parts List

Change	Safety	Ref. No.	Part No.	Part Name & Description	Q'ty	Remarks
		R9032	D0GAR00J0005	M 0 OHM, 1/16W		
		R9033	D0GAR00J0005	M 0 OHM, 1/16W		
		R9080	D0GAR00J0005	M 0 OHM, 1/16W		
		R9081	D0GAR00J0005	M 0 OHM, 1/16W		
		R9082	D0GAR00J0005	M 0 OHM, 1/16W		
		R9084	D0GAR00J0005	M 0 OHM, 1/16W		
		R9150	D1BB2201A074	M 2.2KOHM,J,1/8W		
		R9151	D1BB1051A074	M 1.05KOHM ,J, 1/16W		
		R9152	D1BA3902A023	M 39KOHM ,J, 1/16W		
		R9160	D1BA4701A023	M 4.7KOHM,F 1/16 W		
		R9161	D1BB2002A074	M 20KOHM ,J, 1/16W		
		R9162	D1BB1802A074	M 18KOHM ,J, 1/16W		
		R9163	D0GA103JA039	M 10K OHM J 1/10W		
		R9170	D1BA9101A023	M 9.1KOHM ,J, 1/16W		
		R9171	D1BB1542A143	M 15.4KOHM ,J, 1/16W		
		R9172	D1BB3302A143	M 33KOHM ,J, 1/16W		
		R9200	D0GAR00J0005	M 0 OHM, 1/16W		
		R9201	D0GAR00J0005	M 0 OHM, 1/16W		
		R9202	D0GAR00J0005	M 0 OHM, 1/16W		
		R9203	D0GAR00J0005	M 0 OHM, 1/16W		
		R9204	D1BA1001A023	M 1 KOHM,F.1/16 W		
		R9205	D1BA1001A023	M 1 KOHM,F.1/16 W		
		R9206	D1BA1000A023	M 100 OHM ,J, 1/10W		
		R9208	D1BA2400A023	M 240 OHM,F.1/16 W		
		R9209	D1BA1001A023	M 1 KOHM,F.1/16 W		
		R9210	D1BA1001A023	M 1 KOHM,F.1/16 W		
		R9211	D1BA1001A023	M 1 KOHM,F.1/16 W		
		R9212	D1BA1001A023	M 1 KOHM,F.1/16 W		
		R9213	D1BA2400A023	M 240 OHM,F.1/16 W		
		R9214	D1BA1000A023	M 100 OHM ,J, 1/10W		
		R9216	D0GAR00J0005	M 0 OHM, 1/16W		
		R9217	D0GAR00J0005	M 0 OHM, 1/16W		
		R9218	D0GAR00J0005	M 0 OHM, 1/16W		
		R9219	D0GAR00J0005	M 0 OHM, 1/16W		
		R9220	D1BA1001A023	M 1 KOHM,F.1/16 W		
		R9221	D1BA1001A023	M 1 KOHM,F.1/16 W		
		R9222	D1BA1000A023	M 100 OHM ,J, 1/10W		
		R9224	D1BA2400A023	M 240 OHM,F.1/16 W		
		R9225	D1BA1001A023	M 1 KOHM,F.1/16 W		
		R9226	D1BA1001A023	M 1 KOHM,F.1/16 W		
		R9227	D1BA1001A023	M 1 KOHM,F.1/16 W		
		R9228	D1BA1001A023	M 1 KOHM,F.1/16 W		
		R9229	D1BA2400A023	M 240 OHM,F.1/16 W		
		R9230	D1BA1000A023	M 100 OHM ,J, 1/10W		
		R9400	D0GAR00J0005	M 0 OHM, 1/16W		
		R9401	D0GAR00J0005	M 0 OHM, 1/16W		
		R9402	D0GA105JA023	M 1M OHM, J,1/16W		
		R9501	D0GA103JA039	M 10K OHM J 1/10W		
		R9503	D0GA103JA039	M 10K OHM J 1/10W		
		R9505	D0GA103JA039	M 10K OHM J 1/10W		
		R9507	D0GA103JA039	M 10K OHM J 1/10W		
		R9510	D1BB1202A143	M 12KOHM ,J, 1/16W		
		R9511	D1BB1202A143	M 12KOHM ,J, 1/16W		
		R9516	D0GA473JA039	M 47K OHM, J,1/16W		
		R9603	D0GA330JA023	M 33 OHM, J,1/16W		
		R9604	D0GA330JA023	M 33 OHM, J,1/16W		
		R9605	D0GA103JA039	M 10K OHM J 1/10W		
		R9607	D0GA330JA023	M 33 OHM, J,1/16W		
		R9609	D0GA472JA023	M 4.7KOHM, J,1/16W		
		R9610	D0GA103JA039	M 10K OHM J 1/10W		
		R9611	D0GA101JA039	M 100 OHM ,J, 1/10W		
		R9612	D1H86804A042	NETWORK RESISTER		

Model No. : TH-48AX670S Parts List

Change	Safety	Ref. No.	Part No.	Part Name & Description	Q'ty	Remarks
		R9613	D0GA103JA039	M 10K OHM J 1/10W		
		R9614	D0GAR00J0005	M 0 OHM, 1/16W		
		R9728	D0GAR00J0005	M 0 OHM, 1/16W		
		R9735	D0GA473JA039	M 47K OHM, J,1/16W		
		R9736	D0GA473JA039	M 47K OHM, J,1/16W		
		R9737	D0GA473JA039	M 47K OHM, J,1/16W		
		R9741	D0GA103JA039	M 10K OHM J 1/10W		
		R9743	D0GAR00J0005	M 0 OHM, 1/16W		
		R9744	D0GA103JA039	M 10K OHM J 1/10W		
		R9746	D0GAR00J0005	M 0 OHM, 1/16W		
		R9980	D0GA472JA023	M 4.7KOHM, J,1/16W		
		R9981	D0GA472JA023	M 4.7KOHM, J,1/16W		
		R9985	D0GA472JA023	M 4.7KOHM, J,1/16W		
		R9986	D0GA472JA023	M 4.7KOHM, J,1/16W		
TRANSFORMER						
	⚠	T7202	G4DYA0000590	TRANSFORMER		
	⚠	T7204	G4DYA0000590	TRANSFORMER		
	⚠	T7302	G4DYA0000648	TRANSFORMER		
	⚠	T7303	G4DYA0000648	TRANSFORMER		
	⚠	T8601	G5BYC0000040	TRANSFORMER		
OTHERS						
		A02	K1KY22BA0484	CONNECTOR		
		A10	K1KY12BA0483	CONNECTOR		
		A12	K1KY04BA0387	CONNECTOR		
		A15	K1MY41BA0665	CONNECTOR		
		A16	K1MY51BA0665	CONNECTOR		
	⚠	CF7101	D4CAY2R20002	TERMISTOR		
		CN0100	K1KA14A00248	CONNECTOR		
		CN9300	K1KA07AA0266	CONNECTOR		
	⚠	F7101	K5E502YYA213	FUIS		
		GK4	K1KY03BA0402	CONNECTOR		
		JA1	D0GDR00J0004	CHIP RESISTOR		
		JA2	D0GDR00J0004	CHIP RESISTOR		
		JA3	D0GDR00J0004	CHIP RESISTOR		
		JK3001B	K1U511D00002	AV TERMINAL		
		JK4701	K1FY119E0066	HDMI CONNECTOR		
		JK4702	K1FY119E0066	HDMI CONNECTOR		
		JK4703	K1FY119E0066	HDMI CONNECTOR		
		JK6751	K1ZZ00001558	TUNER SHIELD		
	⚠	JK7101	K2AAYA000004	AC INLET		
		JK8600	K1NA12E00016	CONNECTOR		
		JK8601	K1FY104B0095	K1FY104B0092		
		JK8602	K2LC1YYE0005	JACK TERMINAL		
		JK8605	K1FY105E0025	K1FY105E0017		
		JK8606	K1FY104B0095	K1FY104B0092		
		JS7406	D0GDR00J0004	CHIP RESISTOR		
		K10	K1KY07BA0483	CONNECTOR		
		LF7105	G0B8R0J00001	CHOKE COIL		
	⚠	LF7106	G0B153H00015	LINE FILTER		
	⚠	LF7107	G0B153H00015	LINE FILTER		
		P2	K1KY22BA0491	CONNECTOR		
		P5	K1KY03BA0402	CONNECTOR		
		P6	K1KY15BA0386	CONNECTOR		
		PA2002	K5H4022A0031	FUSE		
		PA2100	K5H1022A0031	FUSE		
		PA4601	K5H1022A0031	FUSE		
		PA5703	K5H1022A0031	FUSE		
		PA7403	K5G103AA0009	FUSE		
		PA7406	ERBRE5R00V	FUSE RESISTOR		
		PA8710	K5H4022A0031	FUSE		
		PC7301	B3PAA0000674	B3PAA0000363, B3PAA0000629		
		PC7302	B3PAA0000674	B3PAA0000363, B3PAA0000629		

Model No. : TH-48AX670S Parts List

Change	Safety	Ref. No.	Part No.	Part Name & Description	Q'ty	Remarks
	⚠	PC7303	B3PAA0000703	PHOTO COUPLER		
	⚠	RL7101	K6B1AYY00100	RELAY LINE		
		RM2800	B3RBB0000018	PHOTO DETECTOR		
		SN2800	B3JB00000219	PHOTO DETECTOR		
		SW2851	EVQ11G05R	SWITCH		
		SW2852	EVQ11G05R	SWITCH		
		SW2853	EVQ11G05R	SWITCH		
		SW2854	EVQ11G05R	SWITCH		
		SW2855	EVQ11G05R	SWITCH		
		SW2857	EVQ11G05R	SWITCH		
		X4501	H0J270500181	CRYSTAL OSSILATOR		
		X6750	H0J240500067	CRYSTAL OSCILLATOR		
		X6800	H0J410500003	CRYSTAL RESONATORS		
		X8300	H0J250500109	CRYSTAL RESONATOR		
		X8600	H0J120500097	CRYSTAL RESONATOR		
		X9400	H0J120500097	CRYSTAL RESONATOR		
		ZA050	K4AD01D00008	TERMINAL		
		ZA052	K4AD01D00011	TERMINAL		
		ZA053	K4AD01D00011	TERMINAL		
		ZA055	K4AD01D00011	TERMINAL		
		ZA060	K4AD01D00011	TERMINAL		
		ZA061	K4AD01D00011	TERMINAL		
		ZA062	K4AD01D00008	TERMINAL		
		ZA063	K4AD01D00008	TERMINAL		
		ZA064	K4AD01D00008	TERMINAL		
		ZA065	K4AD01D00008	TERMINAL		
		ZA066	K4AD01D00008	TERMINAL		
		ZA067	K4AD01D00008	TERMINAL		
		ZA068	K4AD01D00008	TERMINAL		
		ZA070	K4AD01D00008	TERMINAL		
		ZA071	K4AD01D00008	TERMINAL		
		ZA072	K4AD01D00008	TERMINAL		
		ZA073	K4AD01D00008	TERMINAL		
		ZA075	K4AD01D00008	TERMINAL		
		ZA076	K4AD01D00008	TERMINAL		
		ZA077	K4AD01D00008	TERMINAL		
		ZA078	K4AD01D00008	TERMINAL		
		ZA079	K4AD01D00008	TERMINAL		
		ZA080	K4AD01D00008	TERMINAL		
		ZA081	K4AD01D00008	TERMINAL		
		ZA082	K4AD01D00008	TERMINAL		
		ZA083	K4AD01D00008	TERMINAL		
		ZA085	K4AD01D00008	TERMINAL		
		ZA100	K4AD01D00008	TERMINAL		
		ZA200	K4AD01D00011	TERMINAL		
		ZA201	K4AD01D00011	TERMINAL		
		ZA202	K4AD01D00011	TERMINAL		
		ZA203	K4AD01D00011	TERMINAL		
		ZA204	K4AD01D00011	TERMINAL		
		ZA205	K4AD01D00011	TERMINAL		
		ZA206	K4AD01D00011	TERMINAL		
		ZA207	K4AD01D00011	TERMINAL		
		ZA208	K4AD01D00011	TERMINAL		
		ZA209	K4AD01D00011	TERMINAL		
		ZA210	K4AD01D00011	TERMINAL		
		ZA211	K4AD01D00011	TERMINAL		
		ZA212	K4AD01D00011	TERMINAL		
		ZA213	K4AD01D00011	TERMINAL		
		ZA214	K4AD01D00011	TERMINAL		
		ZA215	K4AD01D00011	TERMINAL		
		ZA216	K4AD01D00011	TERMINAL		
		ZA217	K4AD01D00011	TERMINAL		

Model No. : TH-48AX670S Parts List

Change	Safety	Ref. No.	Part No.	Part Name & Description	Q'ty	Remarks
		ZA300	K4AD01D00008	TERMINAL		
		ZA302	K4AD01D00008	TERMINAL		
		ZA303	K4AD01D00008	TERMINAL		
		ZA304	K4AD01D00008	TERMINAL		
		ZA305	K4AD01D00008	TERMINAL		
		ZA306	K4AD01D00008	TERMINAL		
		ZA308	K4AD01D00008	TERMINAL		
		ZA310	K4AD01D00008	TERMINAL		
		ZA311	K4AD01D00008	TERMINAL		
		ZA7101	K4AD01A00004	K4AD01A00003		
		ZA7102	K4AD01A00004	K4AD01A00003		
		ZA7103	K4AD01A00004	K4AD01A00003		
		ZA7104	K4AD01A00004	K4AD01A00003		
		ZA7106	K4AD01A00004	K4AD01A00003		

Model No. : TH-48AX670S Parts List

Change	Safety	Ref. No.	Part No.	Part Name & Description	Q'ty	Remarks
Exploded View						
			K1HY05YY0214	WIFI USB CABLE		
	⚠	1	K2CQ2YY00131	AC CORD		
		2	L0EYAA000056	SPEAKER UNIT		
	⚠	3	L5EDDYY00689	LED PANEL		
		4	N2QAYB000933	REMOTE TRANSMITTER		
		5	N2QBYA000004	TOUCH REMOTE TRANSMITTER		
		6	N5HBZ0000109	WIFI MODULE		
			N5HZZ0000130	BT DONGLE		
		7	N5ZZ00000334	3D GLASS		
	⚠		TBM4GD4601	MODEL NAME PLATE		
		8	TBX5ZA03301	KEY BUTTON BRACKET		
			THE5ZC008N	SCREW (PACKED PEDESTAL ASSY)		
			TKK5ZC50501A	LED PANEL		
		9	TPD4GA05131	CUSHION FRONT		
		10	TPD4GA05781	TOP CUSHION		
		11	TPD4GA05791	BOTTOM CUSHION		
		12	TPE4GH073	SET COVER		
			TQZ4GB865	FAN BAG ASSY		
	⚠		TSCKF0630010	LVDS FFC(51PIN)		
	⚠		TSCKF0630011	LVDS FFC(41PIN)		
		13	TXFPC01SWUS	CARTON ASSY		
			TZBL4GX00211	CUSTOMER SERVICE ASSEMBLY		
		14	TZBL5ZX08911	STAND METAL ASSY		
		15	TZTU4GA1359	BACK COVER ASSY		
			XSS5+15FNK	SCREW (STAND METAL ASSY)		
Electrical Replacement Part List						
	⚠	RTL	TZT/A1SWUS	A PRINT (FINISHED)		
	⚠	RTL	TXN/K1ZLUB	K PRINT(FINISHED)		
	⚠	RTL	TXN/P1SWUS	P PRINT(FINISHED)		
	⚠	RTL	TXNGK1BLVJ	GK PRINT(FINISHED)		