ORDER NO. ITD0408031A3

Service Manual

Progressive Plasma Television

Simplified

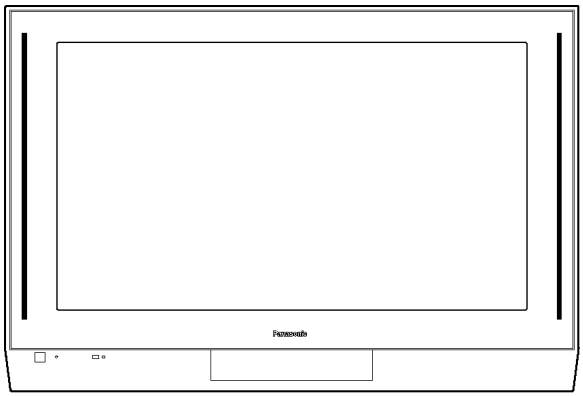

TH-37PA30A
TH-37PA30H
TH-37PA30M
TH-37PA30R
TH-42PA30H
TH-42PA30M
TH-42PA30R

GP6DA Chassis

Please file and use this manual together with the service manual for Model No.TH-37/42PA30E, Order No.ITD0403002C2.

Specifications

Power Source	220 V -240 V 50 Hz /60 Hz AC
Power Consumption	
Normal use	245 W (TH-37PA30)
	315 W (TH-42PA30)
Standby	1.8 W
Power-OFF	1.0 W
Plasma Display panel	
Drive method	AC type
Aspect Ratio	16:9
Contrast Ratio	4000:1
Screen size (No.of pixels)	37-inch (TH-37PA30)
	818 mm (W) × 461 mm (H) × 939 mm (diagonal)
	42-inch (TH-42PA30)
	920 mm (W) × 518 mm (H) × 1,056 mm (diagonal)
	408,960 (852 (W) × 480 (H)) [2,556 × 480 dots]
Sound	
Speaker	Woofer ϕ 80 mm × 2, Tweeter 16 mm × 73 mm × 8
Audio Output	26 W [8 W +8 W, 5 W +5 W] ((10 %THD)

Panasonic®

© 2004 Matsushita Electric Industrial Co., Ltd. All rights reserved. Unauthorized copying and distribution is a violation of law.

Headphone	M3 (3.5 mm) Jack × 1
Applicable signals	
Colour System	NTSC, PAL, PAL60, SECAM, Modified NTSC
Scanning format	525 (480) / 60i • 60p, 625 (575) / 50i • 50p, 1125 / 50i, 1125 / 60i, 1250i / 50
PC signals	VGA display
	VGA
	SVGA, XGA, SXGA, UXGA ..... (compressed)
	Horizontal scanning frequency 15 - 110 kHz
	Vertical scanning frequency 48 - 120 Hz

Receiving System (Except Australia)

21 Systems		Function	21 Systems		Function	21 Systems		Function
1	PAL B, G, H	Reception of broadcast transmissions and Playback from Video Cassette Tape Recorders.	8	NTSC 4.43/5.5 MHz	Playback from Special VCR's or DVD	15	PAL 60 Hz/5.5 MHz	Playback from Special Disc Players and Special VCR's or DVD
2	PAL I		9	NTSC 4.43/6.0 MHz		16	PAL 60 Hz/6.0 MHz	
3	PAL D, K		10	NTSC 4.43/6.5 MHz		17	PAL 60 Hz/6.5 MHz	
4	SECAM B, G		11	NTSC 3.58/5.5 MHz		18	SECAM 60 Hz/5.5 MHz	
5	SECAM D, K		12	NTSC 3.58/6.0 MHz		19	SECAM 60 Hz/6.0 MHz	
6	SECAM K1		13	NTSC 3.58/6.5 MHz		20	SECAM 60 Hz/6.5MHz	
7	NTSC M (NTSC 3.58/4.5 MHz)		14	SECAM I		21	NTSC 50 Hz/ 4.5 MHz	

Receiving System (Australia only)

1. PAL B/G	Reception of Off air broadcasts
2. NTSC 4.43 3. NTSC 3.58 4. PAL 60 Hz	Playback from Video Tape Recorders Playback from Special Video Tape Recorders and Special Video Disc Players (Via the AV Sockets) only.

Receiving Channels (Except Australia)

Regular TV

VHF BAND

2-12 (PAL/SECAM B, K1)
0-12 (PAL B AUST.)
1-9 (PAL B N.Z)
1-12 (PAL/SECAM D)
1-12 (NTSC M Japan)
2-13 (NTSC M U.S.A)

UHF BAND

21-69 (PAL G, H, I/SECAM G, K, K1)
28-69 (PAL B AUST.)
13-57 (PAL D, K)
13-62 (NTSC M Japan)
14-69 (NTSC M U.S.A)

CATV

S1-S20 (OSCAR)
1-125 (U.S.A. CATV)
C13-C49 (JAPAN)
S21-S41 (HYPER)
Z1-Z37 (CHINA)
5A, 9A (AUST.)

Receiving Channels (Australia only)

VHF 0 to 12	PAL B
UHF 21 to 69	PAL G
S'1 to S'3	HYPER TUNER
S1 to S41	(One tuner)

OUTPUT		
AUDIO OUT	AUDIO L-R (RCA Pin Type × 2)	0.5 Vrms
VIDEO OUT	VIDEO (RCA Pin Type)	1.0 Vp-p (75 Ω)
INPUT		
AV1-Rear	VIDEO (RCA Pin Type)	1.0 Vp-p (75 Ω)
	S-VIDEO (MINI DIN 4-pin)	Y: 1.0 Vp-p (75 Ω) C:0.286 Vp-p (75 Ω)

	AUDIO L-R (RCA Pin Type × 2)	0.5 Vrms
AV2-Rear	VIDEO (RCA Pin Type)	1.0 Vp-p (75 Ω)
	AUDIO L-R (RCA Pin Type × 2)	0.5 Vrms
	Y	1.0 Vp-p (including synchronization)
	P_B/P_R	±0.35 Vp-p
AV3-Front	VIDEO (RCA Pin Type)	1.0 Vp-p (75 Ω)
	S-VIDEO (MINI DIN 4-pin)	Y: 1.0 Vp-p (75 Ω) C:0.286 Vp-p (75 Ω)
	AUDIO L-R (RCA Pin Type × 2)	0.5 Vrms
AV4-Rear	VIDEO (RCA Pin Type)	1.0 Vp-p (75 Ω)
	AUDIO L-R (RCA Pin Type × 2)	0.5 Vrms
	Y	1.0 Vp-p (including synchronization)
	P_B/P_R	±0.35 Vp-p
PC	(HIGH-DENSITY D-SUB 15PIN)	R, G, B/ 0.7 Vp-p (75 Ω)
		HD, VD / 1.0 - 5.0 Vp-p (high impedance)
Others	SD Card slot × 1, PC Card slot × 1	
ANT-Rear	UHF / VHF	
Operating Conditions	Temperature :0 ° - 40 °C	
	Humidity :20 % - 80 %RH (non-condensing)	
Accessories Supplied		
Remote Control Transmitter	EUR7635040	
Batteries	2 × R6 (AA) Size	
Clamper	TMME206 × 2	
Ferrite core	Large size × 2, Small size × 5	
Dimensions (W × H × D)	1,040 mm × 697 mm × 139 mm (TH-37PA30)	
	1,140 mm × 757 mm × 139 mm (TH-42PA30)	
Mass (Weight)	34.5 kg (TH-37PA30)	
	41.0 kg (TH-42PA30)	

Notes:

- Design and specifications are subject to change without notice.Mass and dimensions shown are approximate.

⚠ WARNING

This service information is designed for experienced repair technicians only and is not designed for use by the general public.
It does not contain warnings or cautions to advise non-technical individuals of potential dangers in attempting to service a product.
Products powered by electricity should be serviced or repaired only by experienced professional technicians. Any attempt to service or repair the product or products dealt with in this service information by anyone else could result in serious injury or death.

CONTENTS

Page

1 Difference PCB structure sheet ---- **5**
1.1. TH-42PA30H/M/R ---- 5
1.2. TH-37PA30H/M/R ---- 5
1.3. TH-37PA30A ---- 6
2 Service Hint ---- **7**
3 Option Description ---- **8**
4 IIC mode structure (following items value is sample data.) ---- **9**
5 Conductor Views ---- **11**
5.1. P-Board ---- 11
5.2. T, TA, TB and TC-Board ---- 13
5.3. H-Board ---- 14
5.4. DG-Board ---- 16
5.5. G-Board ---- 18
5.6. JG-Board ---- 19
6 Block and Schematic Diagrams ---- **21**

Page

6.1. Main Block Diagram ---- 21
6.2. P-Board Block Diagram ---- 22
6.3. P-Board Schematic Diagram ---- 23
6.4. H, T, TA and TB-Board Block Diagram ---- 24
6.5. T, TA, and TB-Board Schematic Diagram ---- 25
6.6. H-Board (1 of 2) Schematic Diagram ---- 26
6.7. H-Board (2 of 2) Schematic Diagram ---- 27
6.8. DG-Board (1 of 2) Block Diagram ---- 28
6.9. DG-Board (2 of 2) Block Diagram ---- 29
6.10. DG-Board (1 of 8) Schematic Diagram ---- 30
6.11. DG-Board (2 of 8) Schematic Diagram ---- 31
6.12. DG-Board (3 of 8) Schematic Diagram ---- 32
6.13. DG-Board (4 of 8) Schematic Diagram ---- 33
6.14. DG-Board (5 of 8) Schematic Diagram ---- 34
6.15. DG-Board (6 of 8) Schematic Diagram ---- 35

6.16. DG-Board (7 of 8) Schematic Diagram ---------- 36
6.17. DG-Board (8 of 8) Schematic Diagram ---------- 37
6.18. JG-Board Block Diagram ---------- 38
6.19. JG-Board (1 of 2) Schematic Diagram ---------- 39
6.20. JG-Board (2 of 2) Schematic Diagram ---------- 40
6.21. G-Board Schematic Diagram ---------- 41

7 Parts Location ---------- 43
8 Packing Exploded Views ---------- 44
9 Mechanical Replacement Parts List ---------- 46
10 Replacement Parts List ---------- 48
10.1. Replacement Parts List Notes ---------- 48
10.2. Electrical Replacement Part List ---------- 49

1 Difference PCB structure sheet

1.1. TH-42PA30H/M/R

BOARD NAME	TH-42PA30E	TH-42PA30H/M/R	Remarks
SS2	TNPA2872		
SS3	TNPA2873		
SU	TNPA2957AB		
SD	TNPA2958AB		
K	TNPA2988AC		
S	TNPA2990AC		
C1	TNPA3083		
C2	TNPA3084		
SC	TNPA3106		
SS	TNPA3107		
H	TNPA3115	TNPA3432	CHANGED
T	TNPA3116	- - - - -	DELETED
JG	TNPA3151	TNPA3151AD	CHANGED
G	TNPA3320	TXN/G1UFSA	CHANGED
P	TNPA3336		
TA	- - - - -	TNPA3433	ADDED
TB	- - - - -	TNPA3434	ADDED
DG	TXNDG1UHSE	TXNDG1UHSR	CHANGED
PA	TXNPA1UKSE		
PF	TXNPF1UKSE		
D	TZTNP01UHSB		

1.2. TH-37PA30H/M/R

BOARD NAME	TH-37PA30E	TH-37PA30H/M/R	Remarks
SU	TNPA2626AB		
SD	TNPA2627AB		
SS4	TNPA2876		
SS5	TNPA2877		
K	TNPA2988AC		
S	TNPA2990AC		
C1	TNPA3089		
C2	TNPA3090		
SC	TNPA3106AB		
SS	TNPA3107AB		
H	TNPA3115	TNPA3432	CHANGED
T	TNPA3116	- - - - -	DELETED
JG	TNPA3151	TNPA3151AD	CHANGED
G	TNPA3320	TXN/G1UFSA	CHANGED
P	TNPA3336		
TA	- - - - -	TNPA3433	ADDED
TB	- - - - -	TNPA3434	ADDED
DG	TXNDG1UHSE	TXNDG1UHSR	CHANGED
PA	TXNPA1UKSE		
PF	TXNPF1UKSE		
D	TZTNP01UHSB		

1.3. TH-37PA30A

BOARD NAME	TH-37PA30E	TH-37PA30A	Remarks
SU	TNPA2626AB		
SD	TNPA2627AB		
SS4	TNPA2876		
SS5	TNPA2877		
K	TNPA2988AC		
S	TNPA2990AC		
C1	TNPA3089		
C2	TNPA3090		
SC	TNPA3106AB		
SS	TNPA3107AB		
H	TNPA3115	TNPA3432AB	CHANGED
T	TNPA3116	TXN/T1UFSA	CHANGED
JG	TNPA3151	TNPA3151AD	CHANGED
G	TNPA3320	TXN/G1UFSA	CHANGED
P	TNPA3336		
DG	TXNDG1UHSE	TXNDG1UGSA	CHANGED
PA	TXNPA1UKSE		
PF	TXNPF1UKSE		
D	TZTNP01UHSB		

2 Service Hint

Stand the unit used for pedestal.

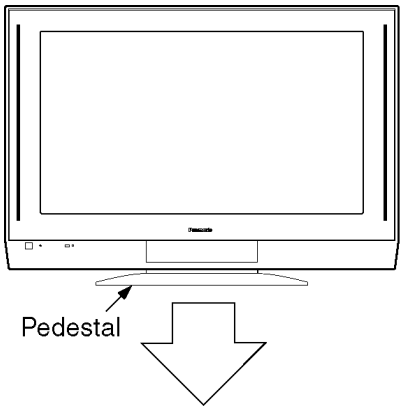

Remove the Rear Cover.

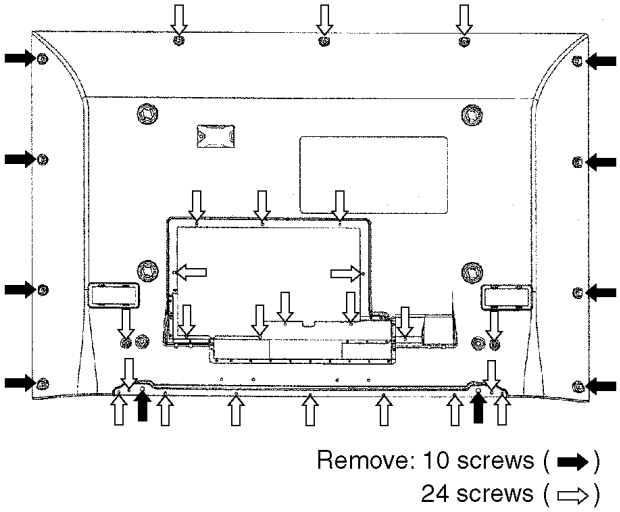

Service position.

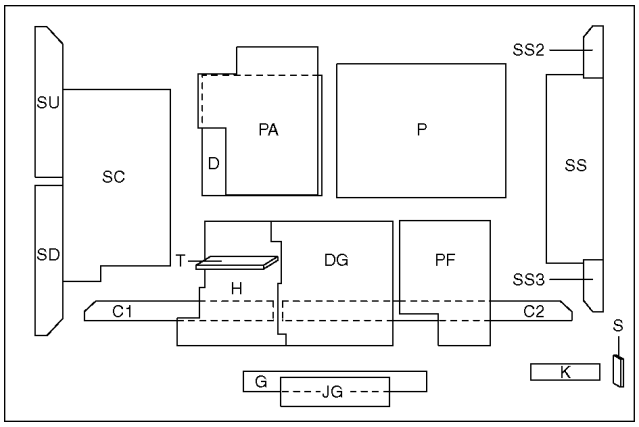

Board Name	Function
C1	DATA DRIVER (RIGHT)
C2	DATA DRIVER (LEFT)
D	DIGTAL SIGNAL PROCESS
DG	DIGTAL CORE, MICOM
G	FRONT TERMINAL, SWITCH
H	REAR TERMINAL
JG	SD CARD/PC CARD, JPEG I/F D/A
K	LED, REMOTE, POWER SWITCH
P	POWER SUPPLY
PA	DC/DC, AUDIO
PF	LINE FILTER
S	POWER SWITCH
SC	SCAN DRIVE
SD	SCAN OUT (DOWN)
SS	SUSTAIN DRIVE
SS2	SUSTAIN CONNECTION (UP)
SS3	SUSTAIN CONNECTION (DOWN)
SU	SCAN OUT (UP)
T	TUNER
TA	MAIN TUNER
TB	SUB TUNER

T-BOARD ..... TH-37PA30A ONLY

TA-BOARD ..... TH-37/42PA30H/M/R ONLY

TB-BOARD ..... TH-37/42PA30H/M/R ONLY

3 Option Description

		Cont	CIS	MEast	HK	Aust			
		Continental	CIS	Saudi Arabia Kuwait	Hong Kong Malaysia Singapore	Aust		Europe	Asia
option 1		8F	AF	AF	AF	AD			
	b0	1	1	1	1	1	Colour system	Auto(1)	
	b1	1	1	1	1	0		SECAM(1)	
	b2	1	1	1	1	1		NTSC(1)	
	b3	1	1	1	1	1		M.NTSC(1)	
	b4	0	0	0	0	0	3:2 pulldown	enable(1)	
	b5	0	1	1	1	1	YUV for MW	enable(1)	
	b6	0	0	0	0	0	free		
	b7	1	1	1	1	1	3D-COMB in the menu	Setup menu(0), Picture menu(1)	
option 2		0	FF	FF	FF	6			
	b0	0	1	1	1	0	CH Plan	ASIA / M.E. / HK/UK / CHINA(1)	
	b1	0	1	1	1	1		NZ/INDNES(1)	
	b2	0	1	1	1	1		AUSTRALIA(1)	
	b3	0	1	1	1	0		E.EUROPE(1)	
	b4	0	1	1	1	0		SPECIAL(1)	
	b5	0	1	1	1	0		AMERICA(1)	
	b6	0	1	1	1	0		CATV(1)	
	b7	0	1	1	1	0		JAPAN(1)	
option 3		B5	37	37	37	B5			
	b0	1	1	1	1	1	sub picture	without sub-picture(0), with sub-picture(1)	
	b1	0	1	1	1	0	2tuner	2tuner(1),1tuner(0)	
	b2	1	1	1	1	1	VGA	enable(1)	
	b3	0	0	0	0	0	AV5	enable(1)	
	b4	1	1	1	1	1	Wide (16:9)	16:9 (1), 4:3 (0) (change multi window/aspect operation)	
	b5	1	1	1	1	1	JPEG	enable(1)	
	b6	0	0	0	0	0	SIF	I only(0), BG only(1)	4.5/5.5/6.0/6.5(0), 5.5/6.0/6.5(1)
	b7	1	0	0	0	1		I/BG/DK/L(2), BG/DK(3)	5.5/6.5(2), 6.0/6.5 (3)
option 4		11	E2	E2	E2	22			
	b0	1	0	0	0	0	A2 enable	enable(1)	4.5(1)
	b1	0	1	1	1	1		not use	5.5(1)
	b2	0	0	0	0	0		not use	6.0(1)
	b3	0	0	0	0	0		not use	6.5(1)
	b4	1	0	0	0	0	NICAM enable	enable(1)	4.5(1)
	b5	0	1	1	1	1		not use	5.5(1)
	b6	0	1	1	1	0		not use	6.0(1)
	b7	0	1	1	1	0		not use	6.5(1)
option 5		0	DE	DE	DE	10			
	b0	0	0	0	0	0	A2 select 6.5MHz	5.742MHz(0) 6.742MHz(1)	
	b1	0	1	1	1	0	NICAM priority	ASIA/M.E.(1)	
	b2	0	1	1	1	0		HK/UK(1)	
	b3	0	1	1	1	0		CHINA(1)	
	b4	0	1	1	1	1		NZ/INDN(1)	
	b5	0	0	0	0	0		AUSTRA(1)	
	b6	0	1	1	1	0		E.EURO(1)	
	b7	0	1	1	1	0		SPECIAL(1)	
option 6		E0	60	62	60	E0			
	b0	0	0	0	0	0	Ext. HV input	without HV input(0) / with HV input(1)	
	b1	0	0	1	0	0	SASO enable	SASO enable(1)	
	b2	0	0	0	0	0	Noise mute	Noise mute enable(0)	
	b3	0	0	0	0	0	Monitor out AV1 mute	Monitor out AV1 mute(1)	
	b4	0	0	0	0	0	Tuner no refresh	Refresh tuner (0), no refresh (1)	
	b5	1	1	1	1	1	Tuner	MACO tuner (1), Others (0)	
	b6	1	1	1	1	1	HYPER	UHF only (0), UHF/VHF (1)	
	b7	1	0	0	0	1	IF I2C	I2C controlled Tuner IF module (1)	
option 7		7F	C06	C6	C6	C6			
	b0	1	0	0	0	0	Power up EC-Mode	Power on EC enable (1)	
	b1	1	1	1	1	1	CH Blanking	Blanking enable (1)	
	b2	1	1	1	1	1	AV Blanking	Blanking enable (1)	
	b3	1	0	0	0	0	Auto WIDE	WSS enable only in aspect Auto (0), WSS always enable	
	b4	1	0	0	0	0	Volume correction	TV Volume coorrection enable (1)	
	b5	1	0	0	0	0	AVLink	Q-Link off selectable in menu (1)	
	b6	1	1	1	1	1	MPX/NICAM display	Display NICAM (0), Display MPX (1)	
	b7	0	1	1	1	1	Owner ID	not use	Enable(1)
option 8		D0	50	50	70	D1			
	b0	0	0	0	0	1	Teletext CH Refresh	not use	enable(1)
	b1	0	0	0	0	0	Geomagnetic Sensor	Geomagnetic sensor enable(1)	
	b2	0	0	0	0	0	Geomagnetic Polarity	Geomagnetic polarity +(0), -(1)	
	b3	0	0	0	0	0	RF Attenuation	Enable(1)	
	b4	1	1	1	1	1	Fine tuning	Enable(1)	
	b5	0	0	0	1	0	Search speed	Slow(1) Fast(0)	
	b6	1	1	1	1	1	TEXT	Enable(1)	
	b7	1	0	0	0	1	TEXT TOP	TOP enable (1)	
option 9		8C	08	08	08	08			
	b0	0	0	0	0	0	Dolby	Dolby enable (1)	
	b1	0	0	0	0	0	3D Subwoofer	Subwoofer enable (1) Dolby model should be 0.	
	b2	1	0	0	0	0	Dolby Virtual	Dolby Virtual enable (1)	
	b3	1	1	1	1	1	Amp	with Amp(0) / without Amp(1)	
	b4	0	0	0	0	0	SoundExt.DA	without SoundExt.DA(0) / with SoundExt.DA(1)	
	b5	0	0	0	0	0	shipping Sound menu	MUSIC(0) / CINEMA(1)	
	b6	0	0	0	0	0	Volume curve	Volume curve1(0), curve2(1)	
	b7	1	0	0	0	0	LIPSYNC IC	External LIPSYNC IC enable (1)	
option10		00	05	07	06	05			
	b0	0	1	1	0	1	OSD language	not use	OSD Large font(0) / Small font(1)
	b1	0	0	1	1	0	ACI all country / lang	ACI enable(1), only Netherlands(0)	OSD language: With Arabic(1)
	b2	0	1	1	1	1	ACI auto MP / Lower pos	ACI auto multi package enable (1)	Lower POS disable(1)
	b3	0	0	0	0	0	ACI offset	ACI offset for VCR prog. enable(1)	not use
	b4	0	0	0	0	0	Blue Back	not use	Enable(0) : This function is not available in PDP.
	b5	0	0	0	0	0	Aspect Auto	Reserved	Enable(0)
	b6	0	0	0	0	0	S1/S1 Detection	Reserved	Enable(0)
	b7	0	0	0	0	0	Protect 5V detect	Protection input enable(1)	
option11		99	C8	C8	C8	98			
	b0	1	0	0	0	0	Acuity Demo	enable(1)	
	b1	0	0	0	0	0	Picture Shift	enable(1)	
	b2	0	0	0	0	0	Shop mode	enable(1)	
	b3	1	1	1	1	1	User aspect Just	enable(1)	
	b4	1	0	0	0	1	User aspect 14:9	enable(1)	
	b5	0	0	0	0	0	NICAM C4 bit	enable(1)	
	b6	0	1	1	1	0	ID-1	enable(1)	
	b7	1	1	1	1	1	1080I	enable(1)	
option12		40	41	41	41	43	Area Option		
	b0	0	1	1	1	1	Asia	Asia(1),europe(0)	
	b1	0	0	0	0	1	Australia	not use	Australia(1)
	b2	0	0	0	0	0	Ireland/India	Ireland(1)	India(1)
	b3	0	0	0	0	0	UK	UK(1)	korea(1)
	b4	0	0	0	0	0	MELCOA	not use	MELCOA(1)
	b5	0	0	0	0	0	28 inch	28 inch (1) when only Large size=0, Wide=1, PTV=0	
	b6	1	1	1	1	1	Large size	52(1)/42(0) for PTV, 36(1)/32(0) for Wide, 34(1)/29(0) for 4:3	
	b7	0	0	0	0	0	JPEG auto on	on(1)	
option13		81	C1	C1	C1	C7	Temporary		
	b0	1	1	1	1	1			
	b1	0	0	0	0	1	Tuner IF (38.9MHz)	38.9MHZ(0), 39.5MHZ(1)	38.0MHz(0), 38.9MHz(1)
	b2	0	0	0	0	1	New ALBD	ALBD14:9 & Zoom3 disable(1)	
	b3	0	0	0	0	0	WSS detection in AV	enable(1)	
	b4	0	0	0	0	0	free		
	b5	0	0	0	0	0	TEXTmode initialize	enable(1), disable when TV(0)	not use
	b6	0	1	1	1	1	MSP select	MSP3411G, MSP4410K(1)	
	b7	1	1	1	1	1	Black-level correction	enable:GC2S+ IAJ0_YOS control(1)	

4 IIC mode structure (following items value is sample data.)

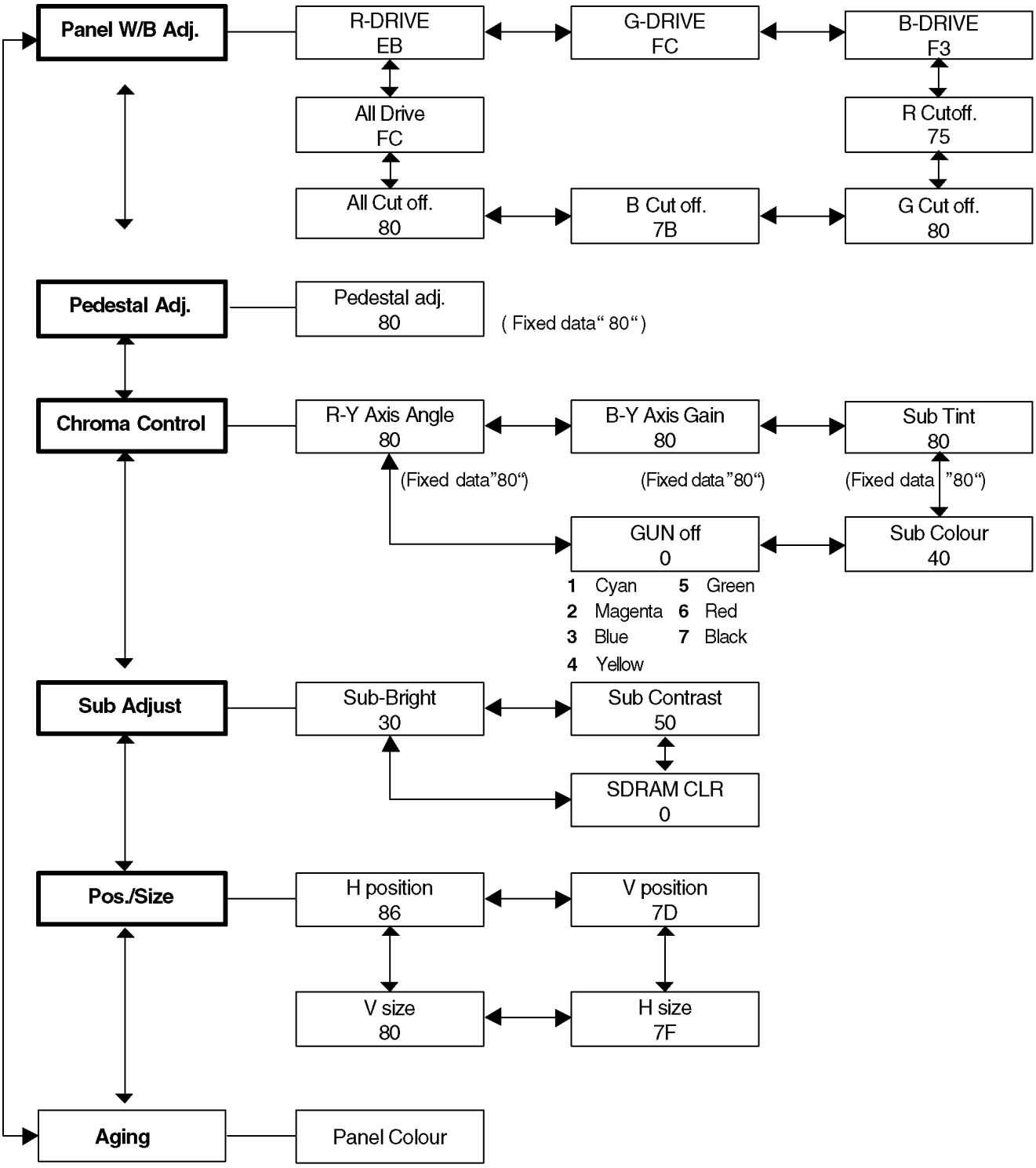

0 WHITE
1 RED
2 GREEN
3 BLUE
4 SCROLL BAR
5 WHITE
6 RAMP_W
7 RAMP_R
8 RAMP_G
9 RAMP_B

These are selected by OK button of Remote control and to exit, press the MENU buttton.

exit : MENU button

5 Conductor Views

5.1. P-Board

P-BOARD (FOIL SIDE)
TNPA3336

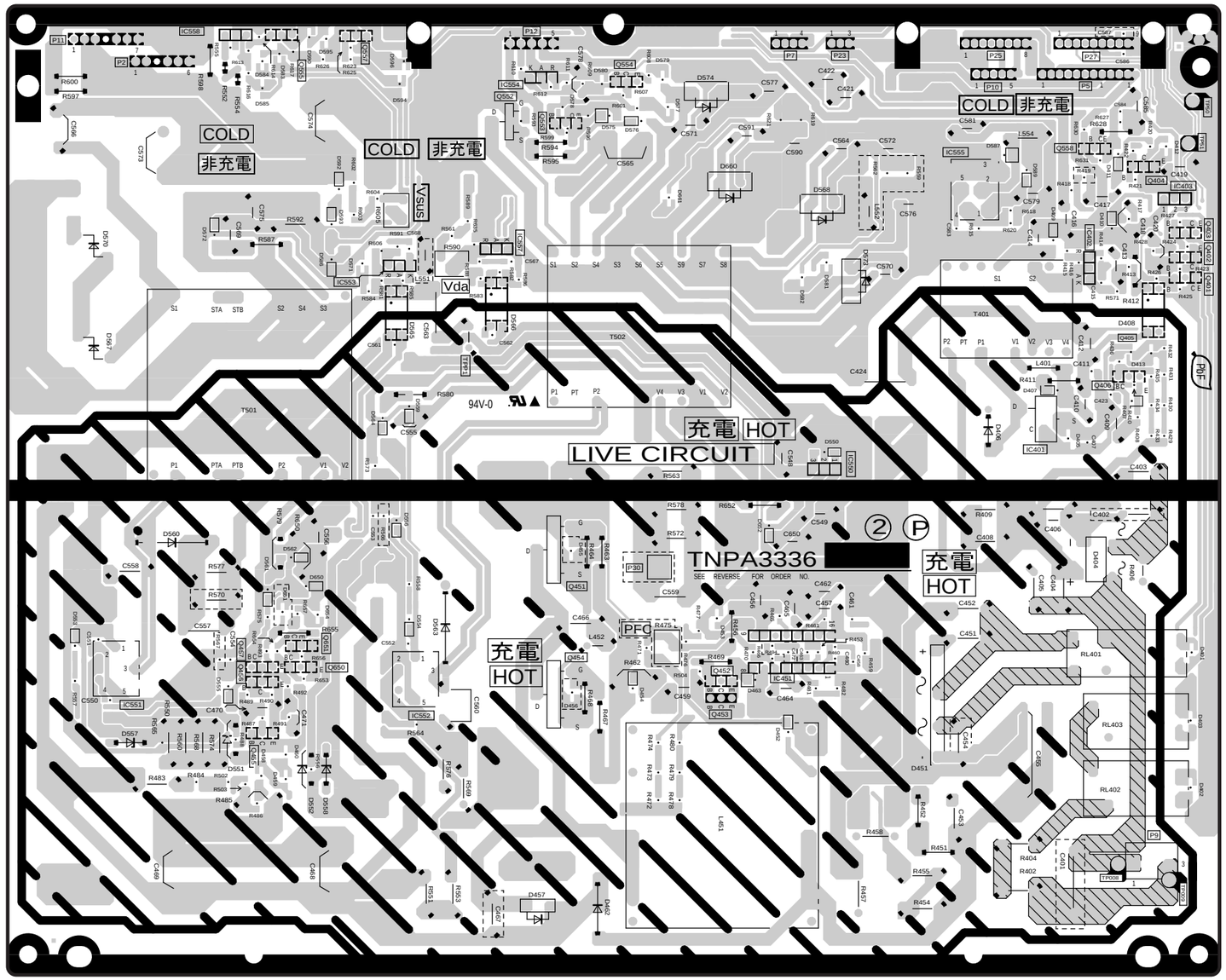

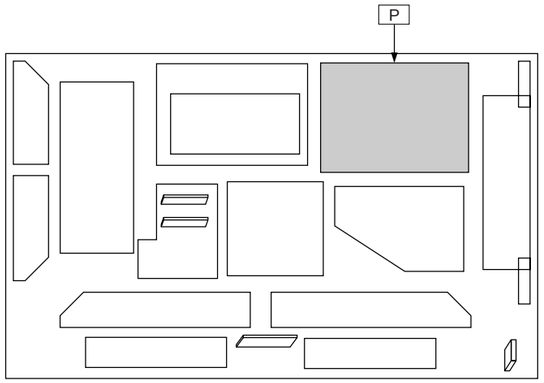

Parts Location

P-BOARD (FOIL SIDE)			
IC		Q452	E-2
IC401	F-4	Q453	E-2
IC402	F-5	Q454	D-2
IC403	G-5	Q455	B-2
IC451	E-2	Q456	B-2
IC550	E-2	Q457	B-2
IC551	A-2	Q552	C-5
IC552	C-2	Q553	D-5
IC553	C-4	Q554	D-6
IC554	C-5	Q555	B-6
IC555	F-5	Q557	C-6
IC557	C-5	Q558	F-5
IC558	B-6	Q650	B-2
		Q651	B-2
TRANSISTOR		**TP**	
Q401	G-4	TP008	G-1
Q402	G-5	TP009	G-1
Q403	G-5	TP50	G-5
Q404	G-5	TP51	G-5
Q405	G-4	TPP1	C-4
Q406	G-4		
Q451	D-3		

TH-37/42PA30H/M/R, TH-37PA30A
P-BOARD TNPA3336

TH-37/42PA30H/M/R, TH-37PA30A
P-BOARD TNPA3336

P-BOARD (COMPONENT SIDE)
TNPA3336

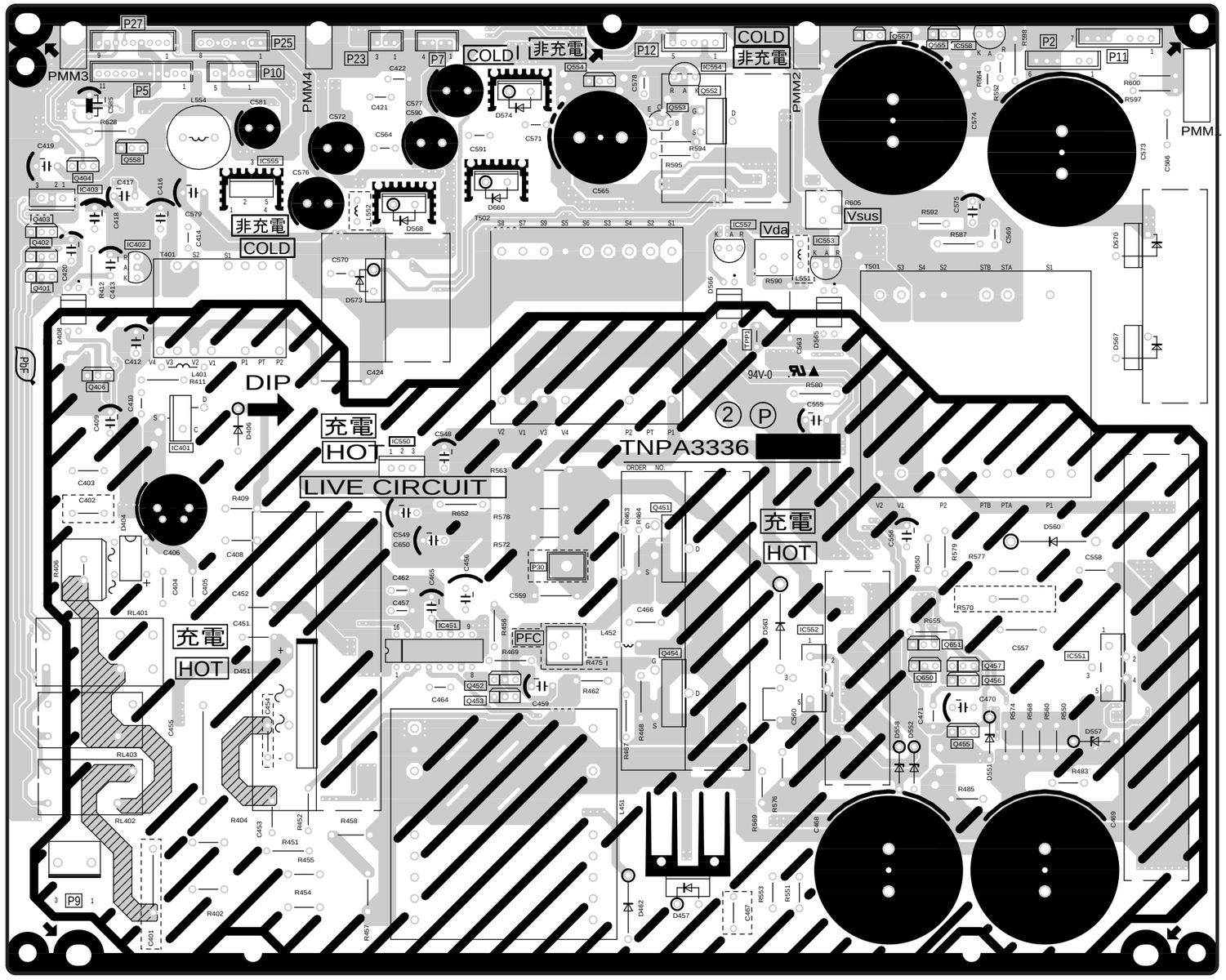

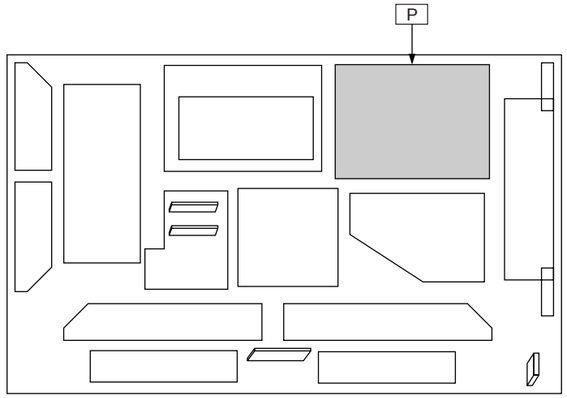

Parts Location

P-BOARD (COMPONENT SIDE)			
IC		**TRANSISTOR**	
IC401	B-4	Q401	A-4
IC402	A-5	Q402	A-5
IC403	A-5	Q403	A-5
IC451	C-3	Q404	A-5
IC550	C-4	Q406	A-4
IC551	F-2	Q451	D-3
IC552	E-3	Q452	C-2
IC553	E-5	Q453	C-2
IC554	D-6	Q454	D-2
IC555	B-5	Q455	F-2
IC557	E-5	Q456	F-2
IC558	F-6	Q457	F-2
		Q552	D-5
		Q553	D-5
		Q554	D-6
		Q555	F-6
		Q557	E-6
		Q558	A-5
		Q650	F-2
		Q651	F-2
		TRANSISTOR	
		TPP1	E-4

TH-37/42PA30H/M/R, TH-37PA30A
P-BOARD TNPA3336

5.2. T, TA, TB and TC-Board

T-BOARD (FOIL SIDE)
TXN/T1UFSA (TH-37PA30A)

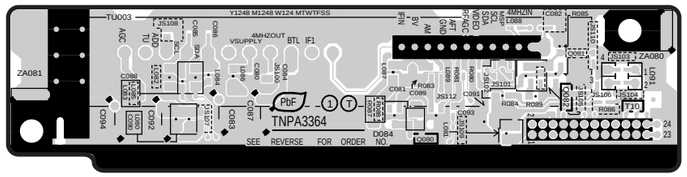

T-BOARD (COMPONENT SIDE)
TXN/T1UFSA (TH-37PA30A)

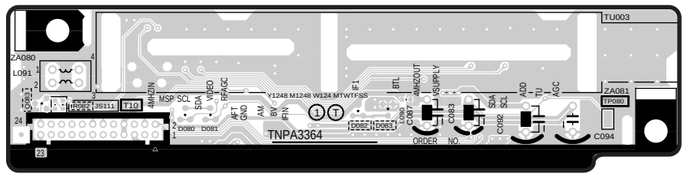

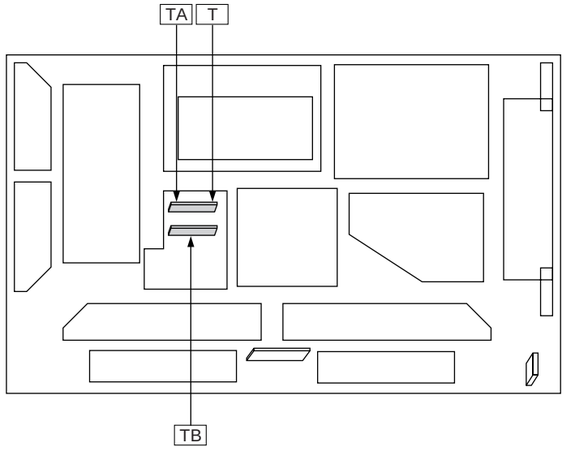

T-BOARD (FOIL SIDE)
TNPA3433 (TH-37/42PA30H/M/R)

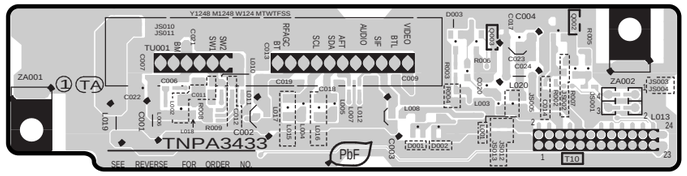

T-BOARD (COMPONENT SIDE)
TNPA3433 (TH-37/42PA30H/M/R)

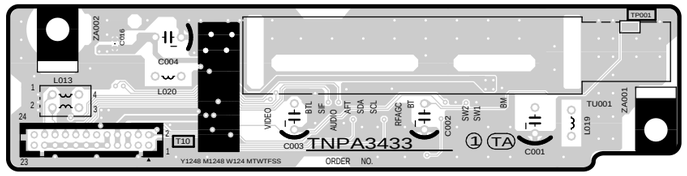

Parts Location

T-BOARD			
TRANSISTOR		**TP**	
Q080 Q081 Q082 Q083	B-5 C-5 C-5 D-5	TP080	F-5

Parts Location

TA-BOARD			
TRANSISTOR		**TP**	
Q002 Q003	C-4 C-4	TP001	F-4

TB-BOARD (FOIL SIDE)
TNPA3434 (TH-37/42PA30H/M/R)

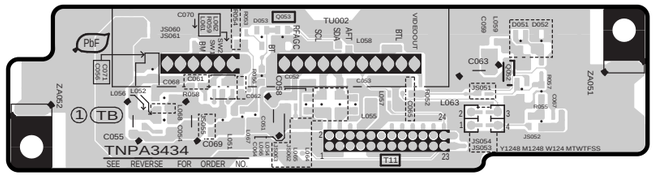

TB-BOARD (COMPONENT SIDE)
TNPA3434 (TH-37/42PA30H/M/R)

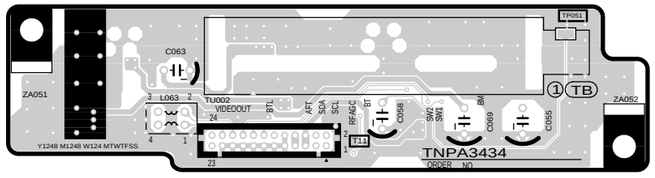

Parts Location

TB-BOARD			
TRANSISTOR		**TP**	
Q052 Q053	C-2 B-2	TP051	F-2

TH-37PA30A	T-BOARD	TXN/T1UFSA
TH-37/42PA30H/M/R	TA-BOARD	TNPA3433
TH-37/42PA30H/M/R	TB-BOARD	TNPA3434

TH-37PA30A	T-BOARD	TXN/T1UFSA
TH-37/42PA30H/M/R	TA-BOARD	TNPA3433
TH-37/42PA30H/M/R	TB-BOARD	TNPA3434

5.3. H-Board

H-BOARD (FOIL SIDE)
TNPA3432 (TH-37/42PA30H/M/R)
TNPA3432AB (TH-37PA30A)

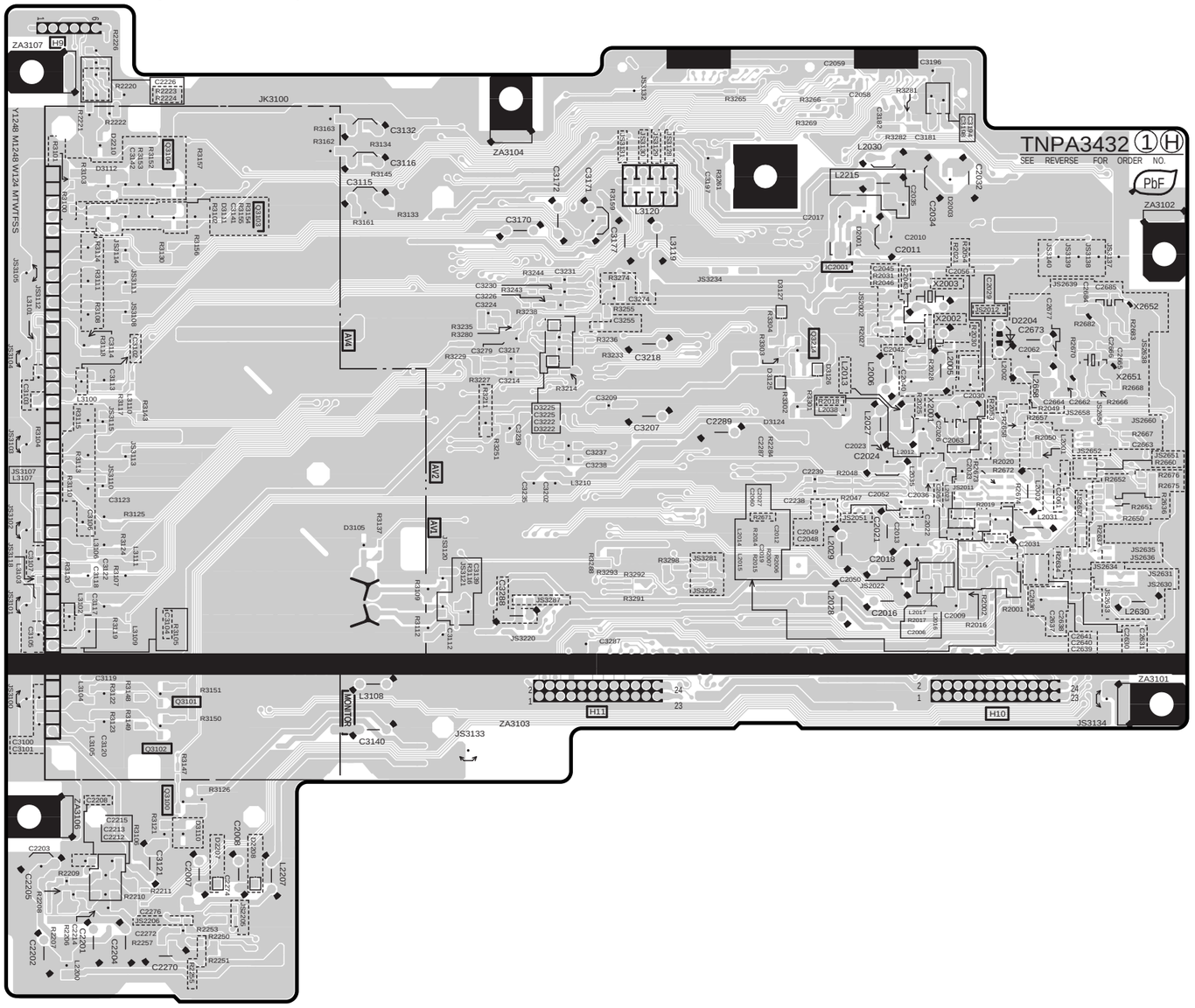

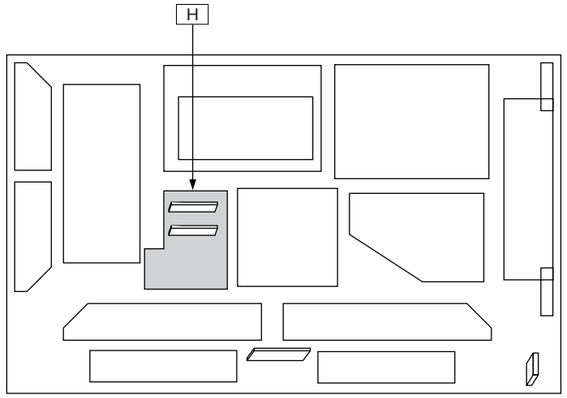

Parts Location

H-BOARD (FOIL SIDE)			
IC		**TRANSISTOR**	
IC2001	E-4	Q3100	B-2
		Q3101	B-2
		Q3102	A-2
		Q3103	B-5
		Q3104	B-5
		Q3214	E-4

TH-37/42PA30H/M/R H-BOARD TNPA3432
TH-37PA30A H-BOARD TNPA3432AB

TH-37/42PA30H/M/R H-BOARD TNPA3432
TH-37PA30A H-BOARD TNPA3432AB

H-BOARD (COMPONENT SIDE)
TNPA3432 (TH-37/42PA30H/M/R)
TNPA3432AB (TH-37PA30A)

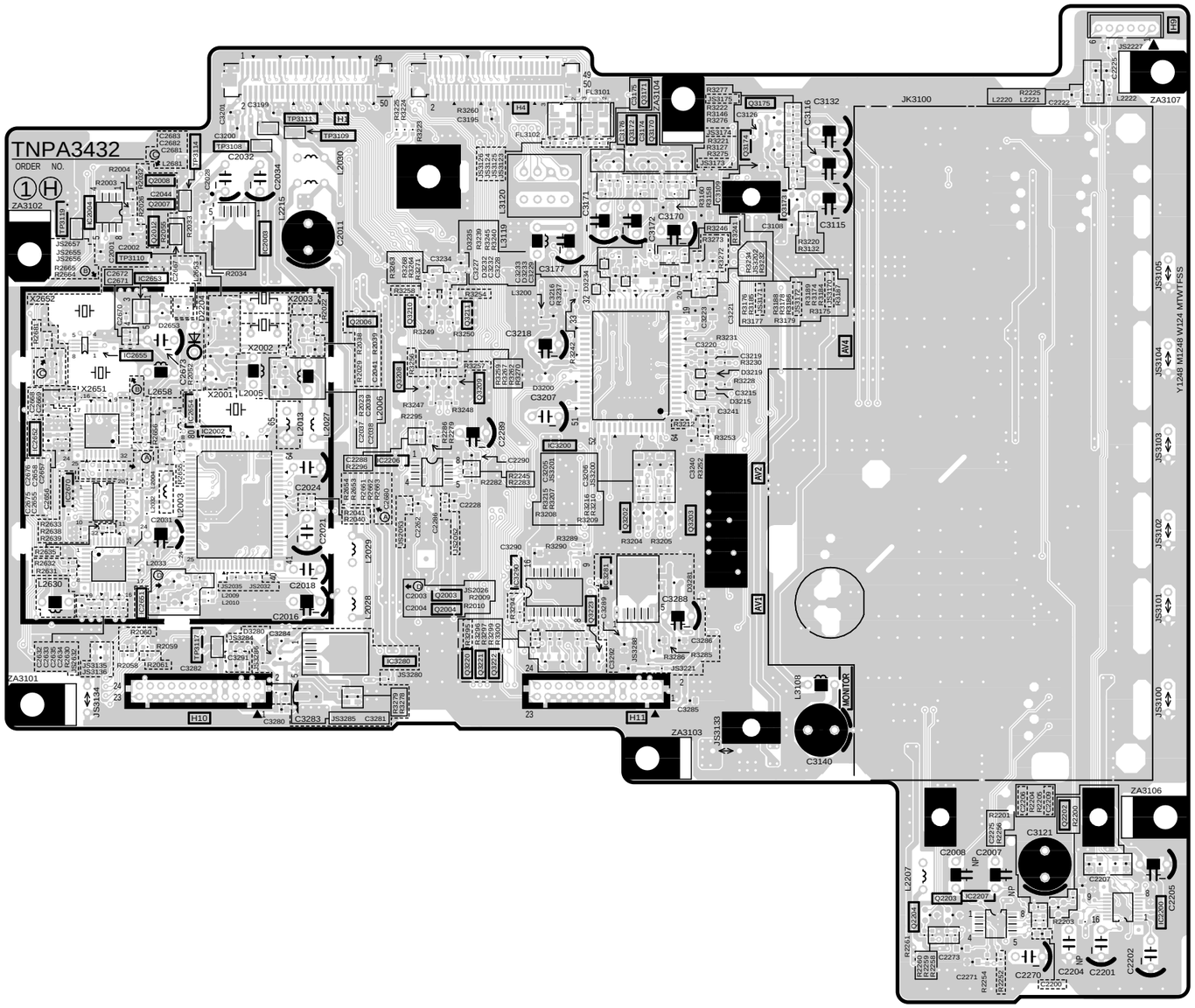

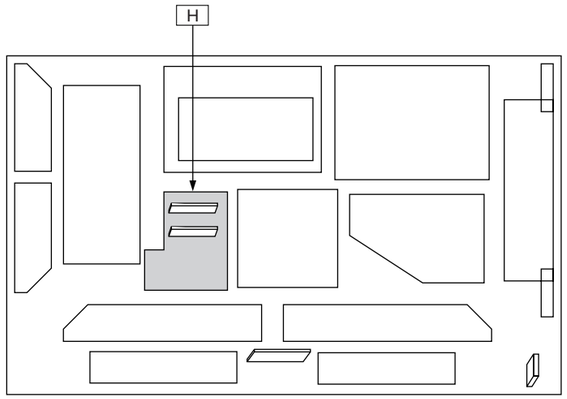

Parts Location

H-BOARD (COMPONENT SIDE)			
IC		Q2203	E-1
		Q2204	E-1
IC2002	B-4	Q3170	D-5
IC2003	B-4	Q3171	D-5
IC2004	A-5	Q3172	D-5
IC2200	F-1	Q3173	D-5
IC2206	C-3	Q3174	D-5
IC2207	E-1	Q3175	D-5
IC2651	A-3	Q3202	D-3
IC2652	A-3	Q3203	D-3
IC2653	A-4	Q3208	C-4
IC2654	B-4	Q3209	C-4
IC2655	A-4	Q3210	C-4
IC2670	A-3	Q3211	C-4
IC3200	C-3	Q3220	C-2
IC3280	C-2	Q3221	C-2
IC3281	D-3	Q3222	C-2
IC3290	C-3	Q3223	D-3
TRANSISTOR		**TP**	
Q2003	C-3	TP3108	B-5
Q2004	C-3	TP3109	B-5
Q2006	B-4	TP3110	A-4
Q2007	A-5	TP3111	B-5
Q2008	A-5	TP3117	B-3
Q2012	A-4	TP3119	A-5
Q2202	F-2		

TH-37/42PA30H/M/R	H-BOARD	TNPA3432	TH-37/42PA30H/M/R	H-BOARD	TNPA3432
TH-37PA30A	H-BOARD	TNPA3432AB	TH-37PA30A	H-BOARD	TNPA3432AB

5.4. DG-Board

DG-BOARD (FOIL SIDE)
TXNDG1UHSR (TH-37/42PA30H/M/R)
TXNDG1UGSA (TH-37PA30A)

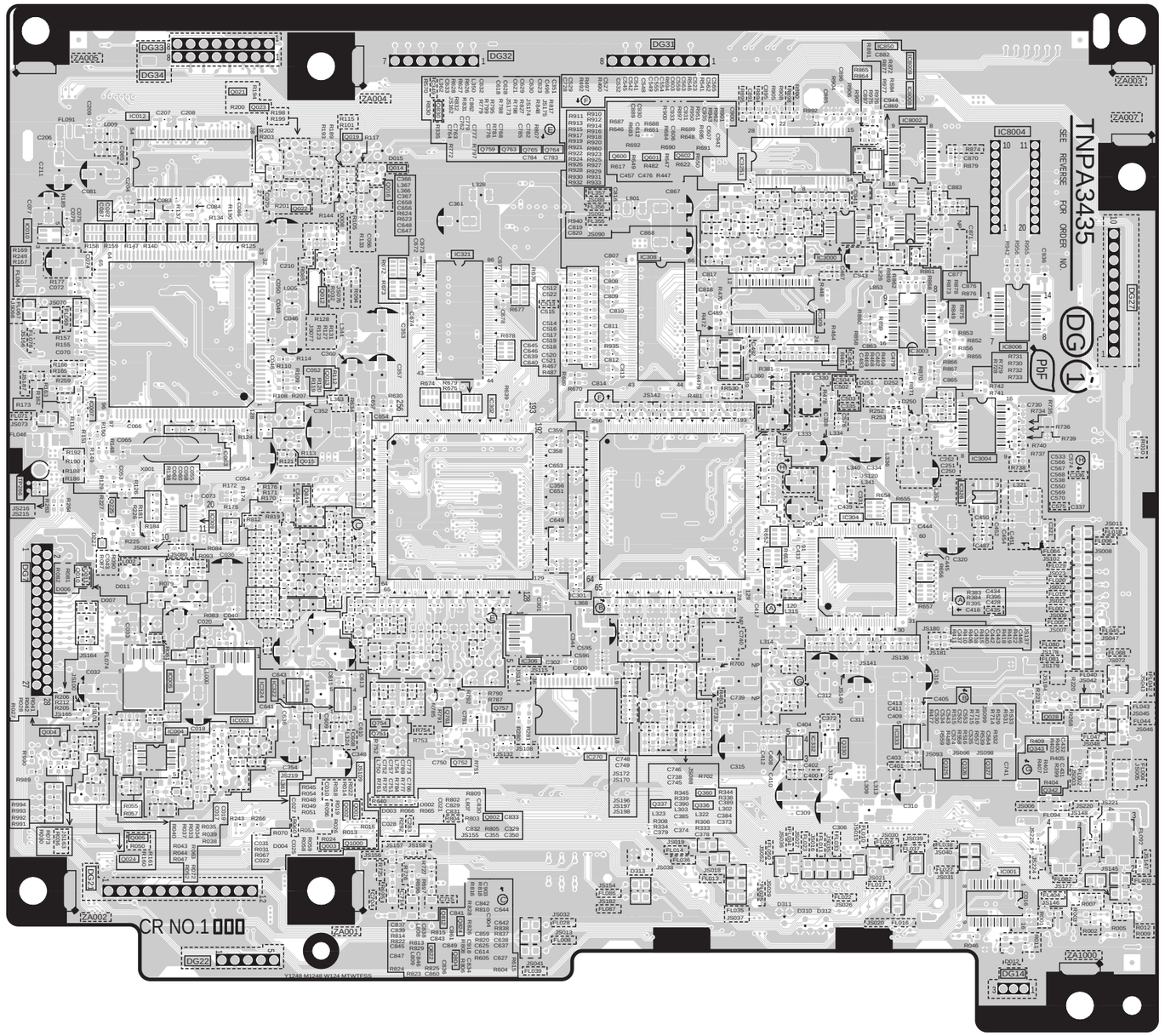

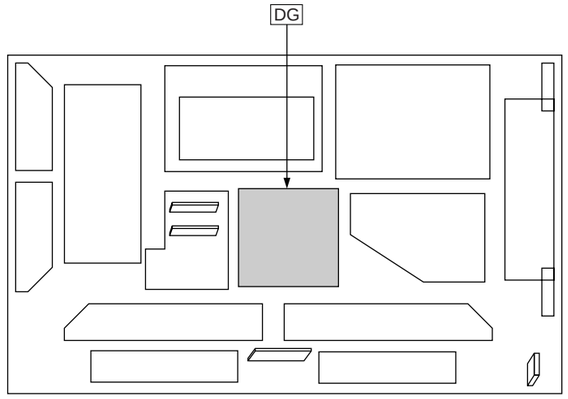

Parts Location

DG-BOARD (FOIL SIDE)					
IC		**TRANSISTOR**		Q1751	C-2
IC1001	F-2	Q1000	B-2	Q1752	C-2
IC1003	B-2	Q1001	B-2	Q1754	C-2
IC1004	B-2	Q1002	B-2	Q1757	C-2
IC1005	B-3	Q1003	B-2	Q1759	C-5
IC1007	A-4	Q1004	A-2	Q1761	C-2
IC1009	B-3	Q1005	A-2	Q1763	C-5
IC1010	A-5	Q1010	A-3	Q1764	C-5
IC1012	A-5	Q1011	A-3	Q1765	C-5
IC1270	D-2	Q1012	B-4	Q1802	C-2
IC1301	D-3	Q1013	B-4	Q1804	C-1
IC1302	C-4	Q1014	C-5	Q1812	C-1
IC1304	E-3	Q1015	B-4	Q1814	B-3
IC1306	C-3	Q1016	C-5	Q1822	C-1
IC1308	D-5	Q1019	B-5	Q1824	C-1
IC1309	E-4	Q1021	B-5	Q1830	C-5
IC1321	C-5	Q1022	B-5	**TP**	
IC1322	B-3	Q1023	B-5	TP266	A-3
IC1324	B-3	Q1024	A-2		
IC1326	E-3	Q1028	F-2		
IC1332	E-2	Q1225	A-3		
IC1333	E-2	Q1325	E-2		
IC1850	E-5	Q1326	E-2		
IC3000	E-5	Q1327	E-2		
IC3003	E-4	Q1330	E-2		
IC3004	E-4	Q1336	D-2		
IC3251	D-5	Q1337	D-2		
IC8002	E-5	Q1342	F-2		
IC8004	F-5	Q1343	F-2		
IC8006	E-5	Q1360	D-2		
IC8006	F-4	Q1600	D-5		
IC8008	E-5	Q1601	D-5		
IC8009	E-5	Q1602	D-5		

TH-37/42PA30H/M/R DG-BOARD TXNDG1UHSR
TH-37PA30A DG-BOARD TXNDG1UGSA

TH-37/42PA30H/M/R DG-BOARD TXNDG1UHSR
TH-37PA30A DG-BOARD TXNDG1UGSA

DG-BOARD (COMPONENT SIDE)
TXNDG1UHSR (TH-37/42PA30H/M/R)
TXNDG1UGSA (TH-37PA30A)

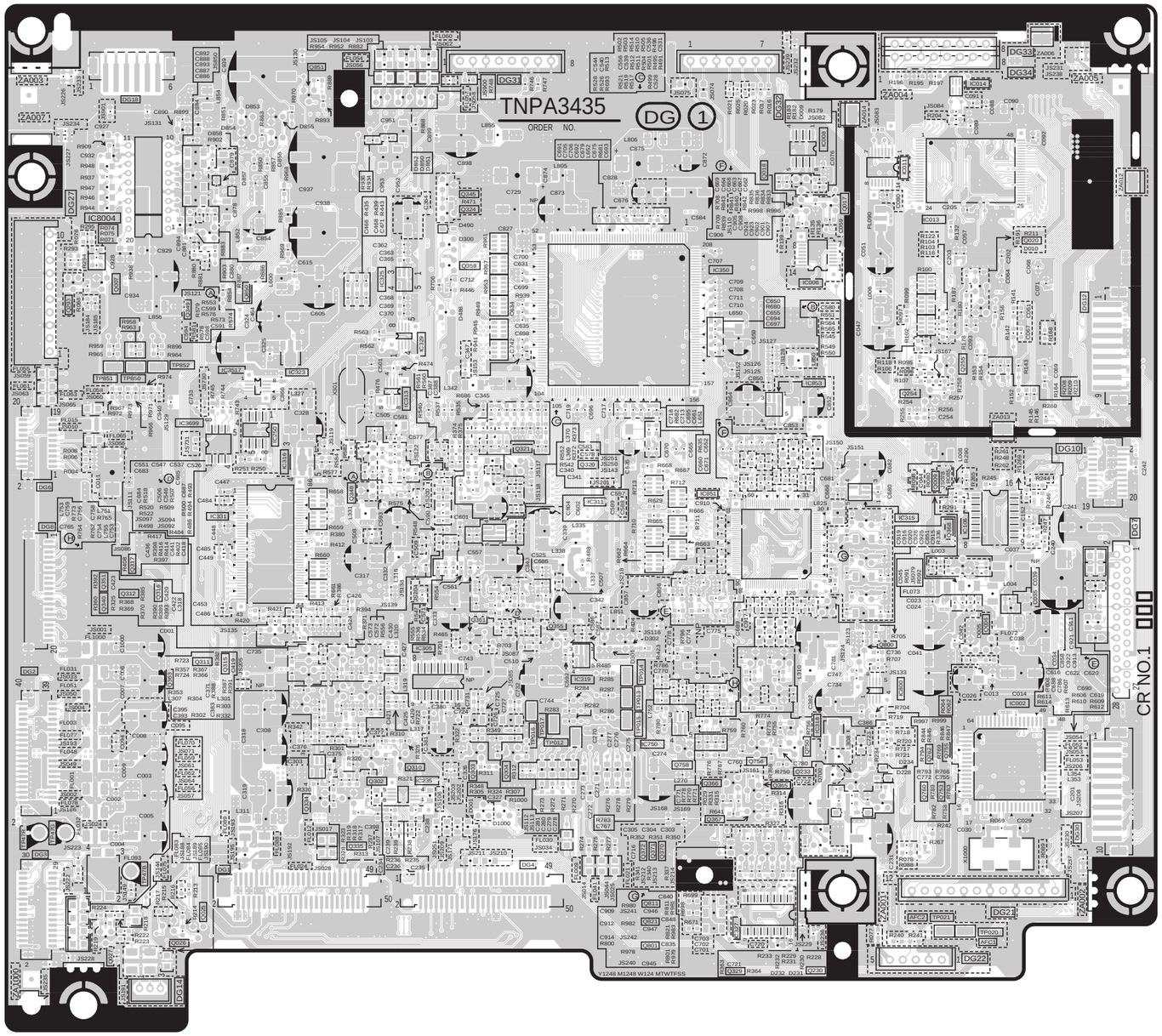

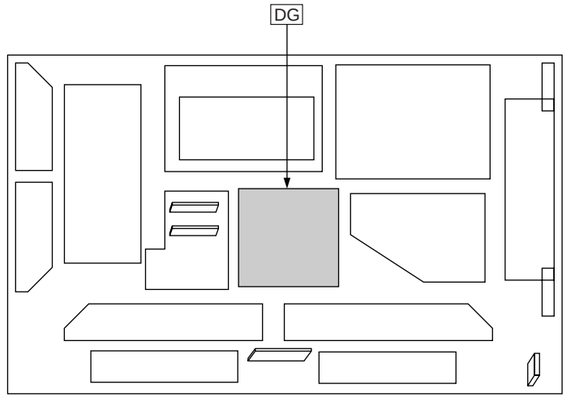

Parts Location

DG-BOARD (COMPONENT SIDE)					
IC		**TRANSISTOR**		Q1361	C-3
IC1002	F-2	Q1006	E-3	Q1363	B-3
IC1006	E-4	Q1007	A-4	Q1365	D-2
IC1008	E-5	Q1009	E-3	Q1366	D-2
IC1011	E-5	Q1017	E-5	Q1367	D-2
IC1013	E-5	Q1018	D-5	Q1368	E-3
IC1014	E-5	Q1020	F-5	Q1370	D-2
IC1106	E-3	Q1025	B-1	Q1371	D-2
IC1235	C-2	Q1026	B-1	Q1372	D-2
IC1250	B-4	Q1027	A-1	Q1750	E-2
IC1303	B-2	Q1230	E-1	Q1753	E-2
IC1305	C-3	Q1233	E-2	Q1755	E-2
IC1311	D-3	Q1254	E-4	Q1756	D-2
IC1313	C-4	Q1255	E-4	Q1758	D-2
IC1315	E-3	Q1293	A-4	Q1760	E-2
IC1316	B-4	Q1302	C-2	Q1762	E-2
IC1318	E-2	Q1303	C-2	Q1800	E-3
IC1319	D-3	Q1304	C-2	Q1801	D-1
IC1323	B-4	Q1310	C-2	Q1811	D-2
IC1325	C-4	Q1311	B-3	Q1821	D-1
IC1327	D-1	Q1312	A-3	Q1850	B-4
IC1329	C-4	Q1315	B-3	Q1851	B-5
IC1331	B-3	Q1316	A-3	**TP**	
IC1350	D-5	Q1317	A-3	TP012	C-2
IC1750	D-2	Q1320	D-4	TP013	D-2
IC1800	E-2	Q1321	C-4	TP014	D-3
IC1851	D-3	Q1324	C-5	TP015	D-2
IC1853	E-4	Q1329	D-1	TP016	C-2
IC3517	B-4	Q1334	B-2	TP017	C-2
IC3699	B-4	Q1335	B-2	TP020	E-1
IC8004	A-5	Q1340	A-3	TP021	E-1
		Q1345	C-5	TP47B	A-2
		Q1348	B-3	TP47G	A-2
		Q1349	B-4	TP47R	A-2
		Q1351	A-3	TP850	A-4
		Q1355	C-3	TP851	A-4
		Q1359	C-5	TP852	B-4

TH-37/42PA30H/M/R DG-BOARD TXNDG1UHSR
TH-37PA30A DG-BOARD TXNDG1UGSA

5.5. G-Board

G-BOARD (FOIL SIDE)
TXN/G1UFSA

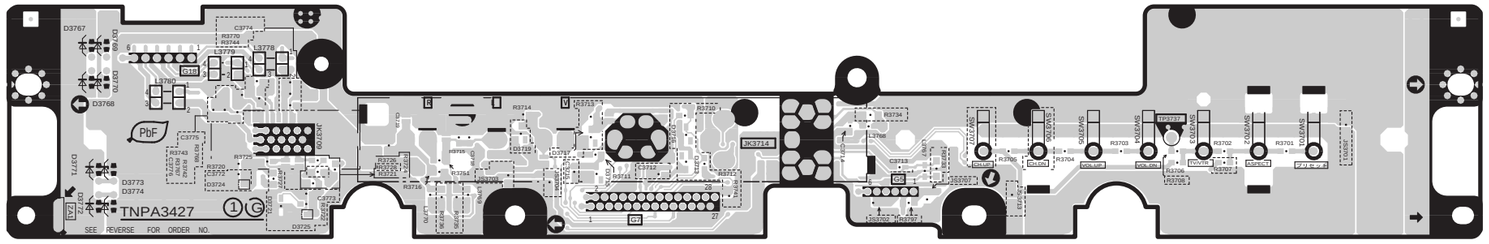

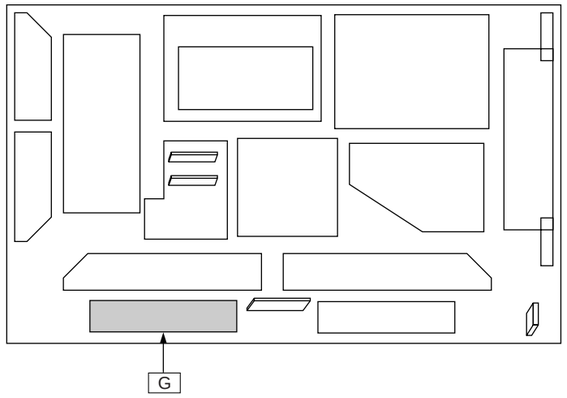

G-BOARD (COMPONENT SIDE)
TXN/G1UFSA

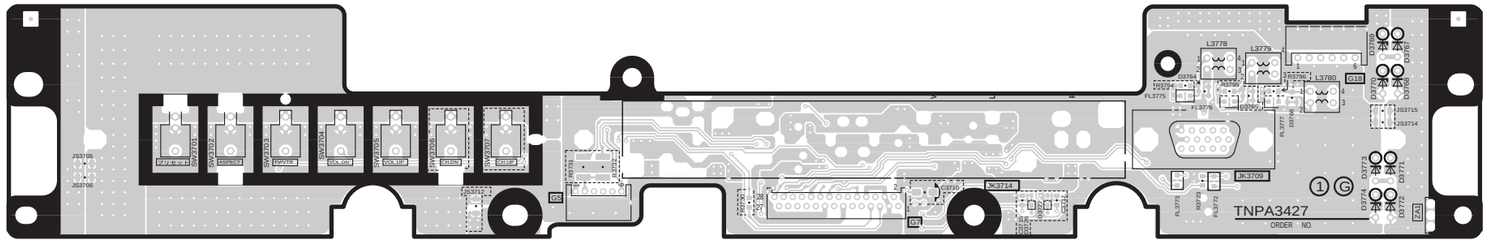

TH-37/42PA30H/M/R, TH-37PA30A
G-BOARD TXN/G1UFSA

TH-37/42PA30H/M/R, TH-37PA30A
G-BOARD TXN/G1UFSA

5.6. JG-Board

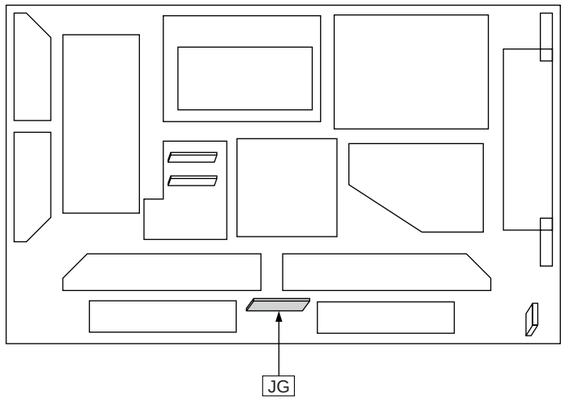

JG-BOARD(FOIL SIDE)
TNPA3151AD

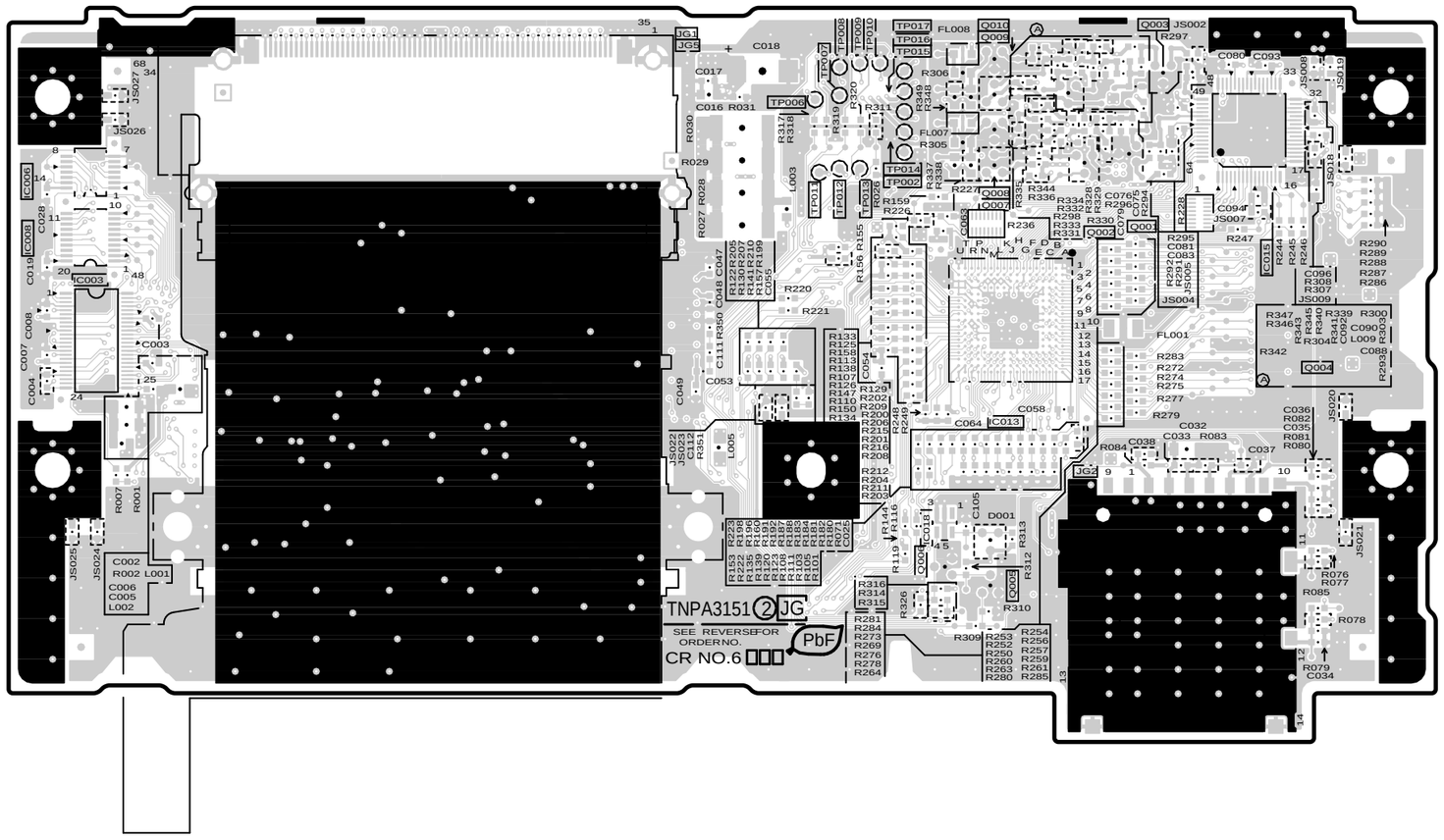

Parts Location

JG-BOARD (FOIL SIDE)			
IC		**TP**	
IC6003	A-3	TP6002	E-4
IC6006	A-4	TP6006	D-4
IC6008	A-3	TP6007	E-4
IC6013	E-3	TP6008	E-4
IC6015	F-4	TP6009	E-4
IC6018	E-2	TP6010	E-4
		TP6011	D-4
TRANSISTOR		TP6012	E-4
Q6001	F-4	TP6013	E-4
Q6002	F-4	TP6014	E-4
Q6003	F-4	TP6015	E-4
Q6004	E-4	TP6016	E-4
Q6005	E-2	TP6017	E-4
Q6006	E-2		
Q6007	E-4		
Q6008	E-4		
Q6009	E-4		
Q6010	E-4		

TH-37/42PA30H/M/R, TH-37PA30A
JG-BOARD TNPA3151AD

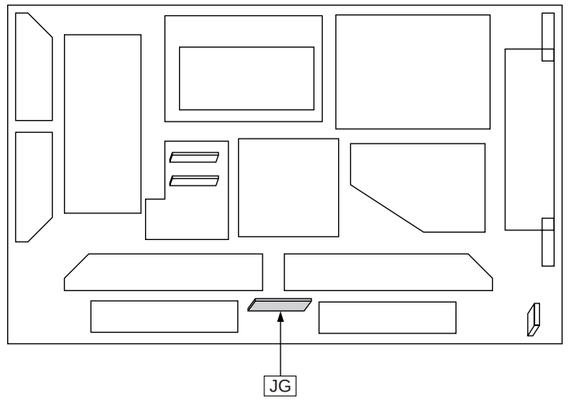

JG-BOARD(COMPONENT SIDE)
TNPA3151AD

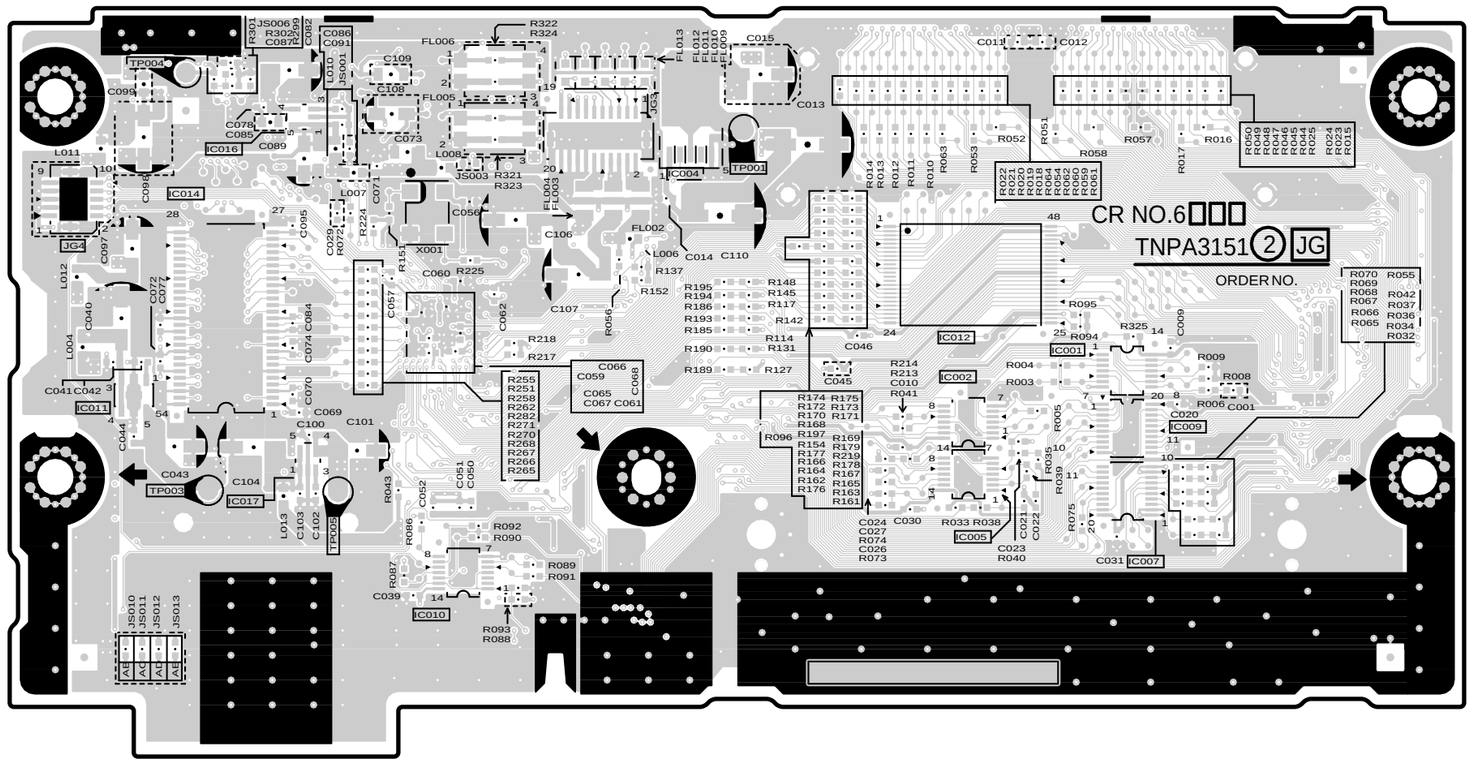

Parts Location

JG-BOARD (COMPONENT SIDE)			
IC		TP	
IC6001	F-3	TP6001	D-4
IC6002	E-3	TP6003	B-2
IC6004	D-4	TP6004	B-4
IC6005	E-2	TP6005	B-2
IC6007	F-2		
IC6009	F-3		
IC6010	C-2		
IC6011	B-3		
IC6012	E-3		
IC6014	B-3		
IC6016	B-4		
IC6017	B-3		

TH-37/42PA30H/M/R, TH-37PA30A
JG-BOARD TNPA3151AD

6 Block and Schematic Diagrams

6.1. Main Block Diagram

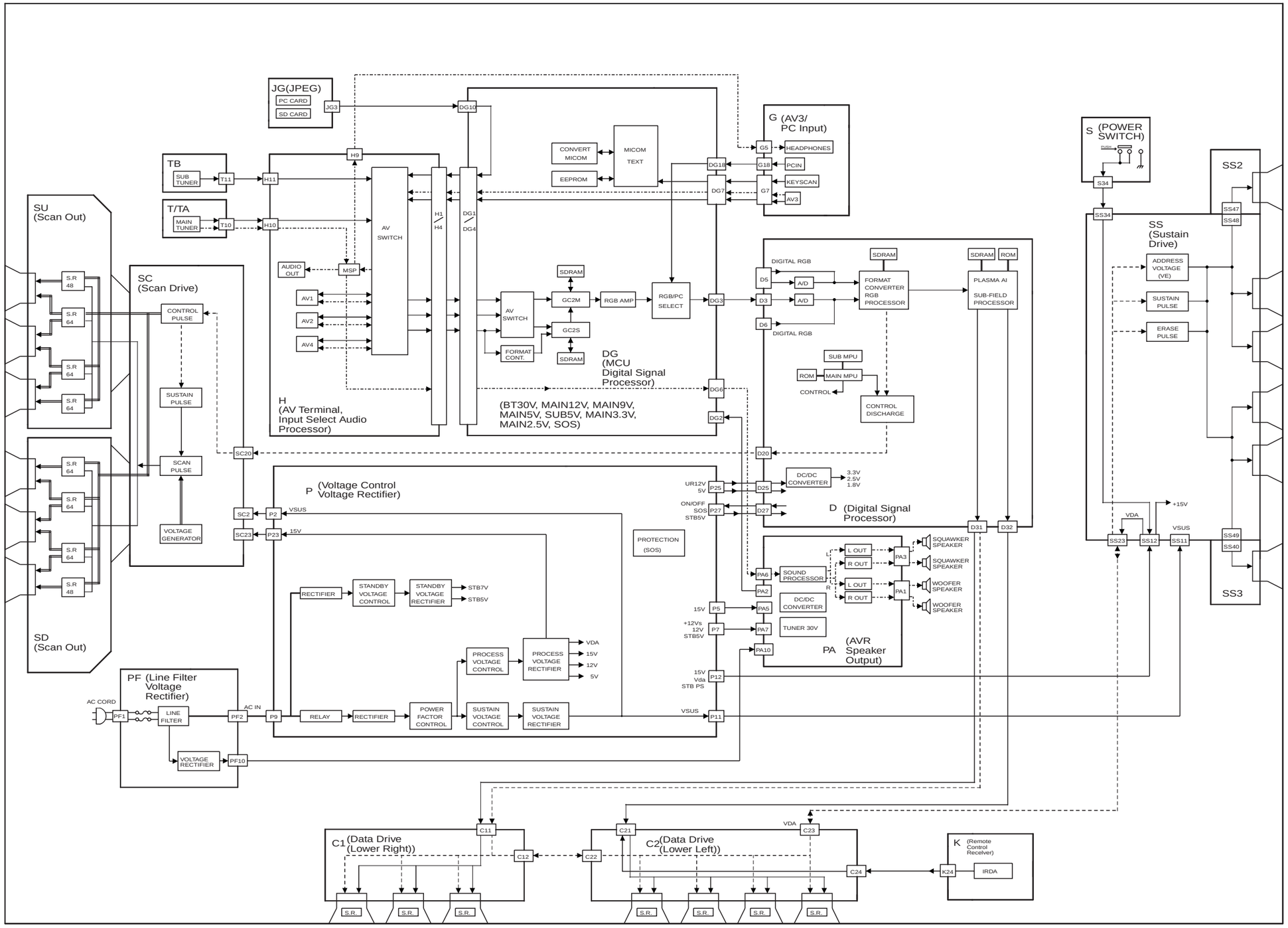

TH-37PA30A,TH-37/42PA30H/M/R
Main Block Diagram

TH-37PA30A,TH-37/42PA30H/M/R
Main Block Diagram

6.2. P-Board Block Diagram

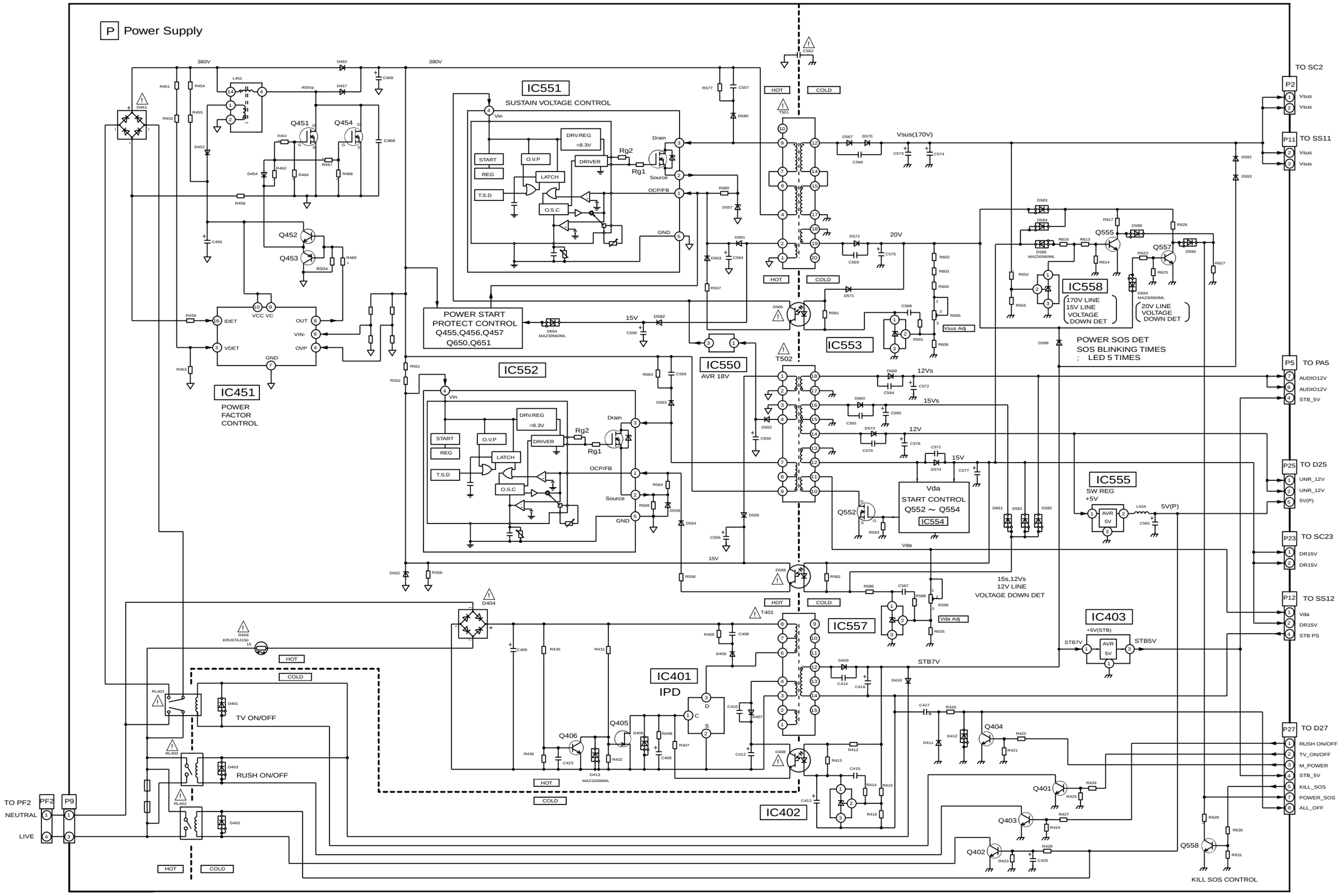

TH-37PA30A, TH-37/42PA30H/M/R
P-Board Block Diagram

TH-37PA30A, TH-37/42PA30H/M/R
P-Board Block Diagram

6.3. P-Board Schematic Diagram

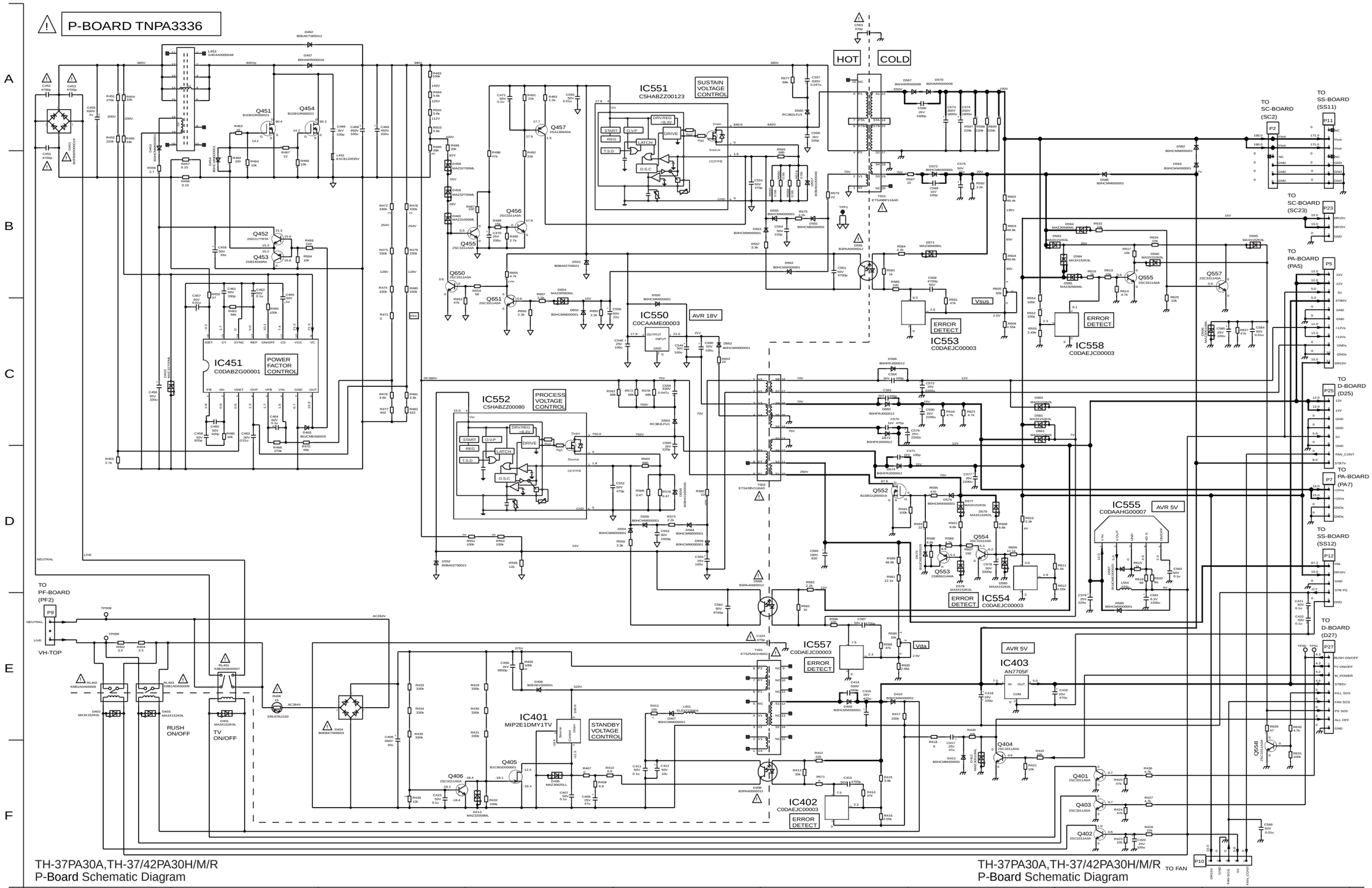

6.4. H, T, TA and TB-Board Block Diagram

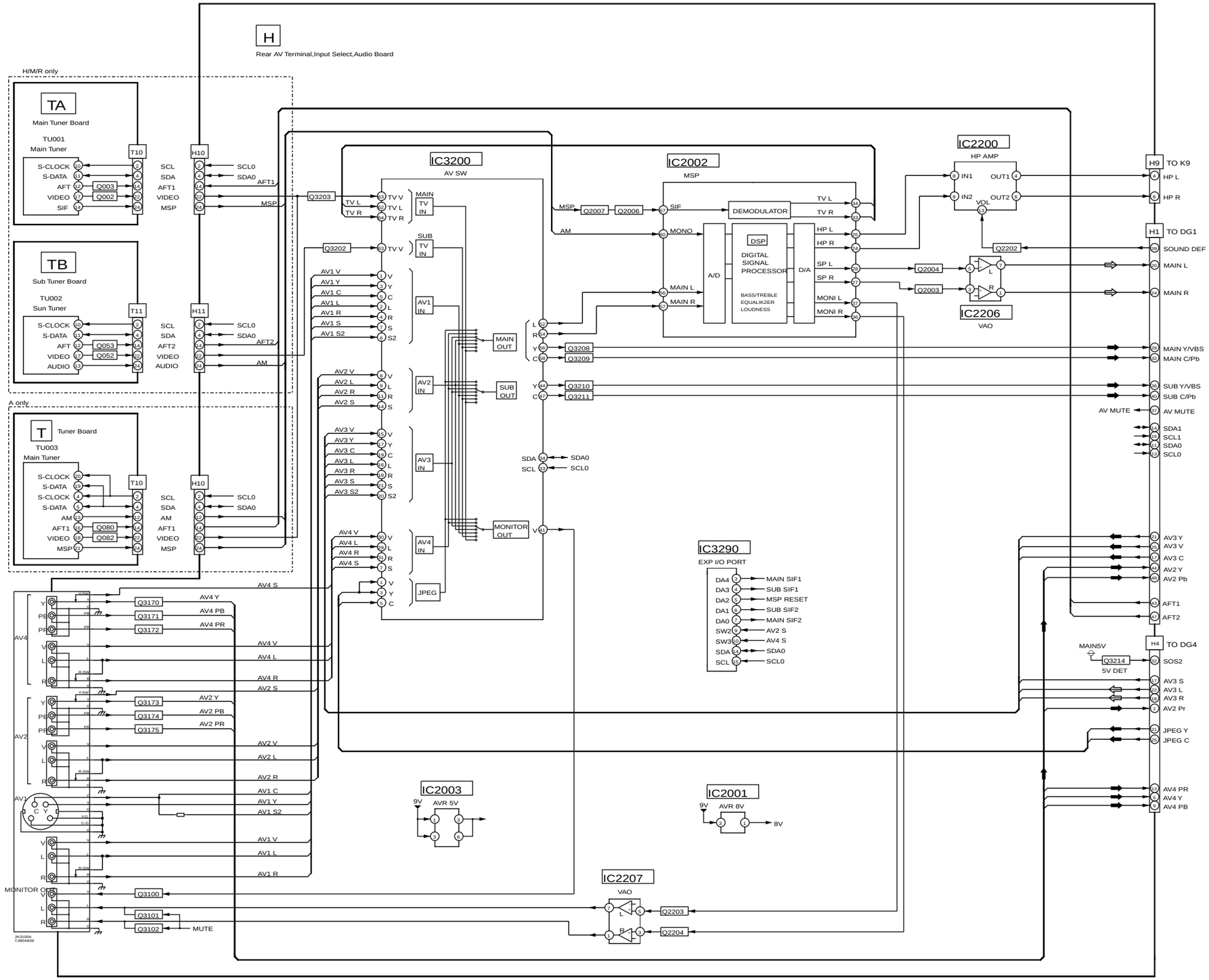

TH-37PA30A,TH-37/42PA30H/M/R
H, T, TA, and TB-Board Block Diagram

TH-37PA30A,TH-37/42PA30H/M/R
H, T, TA, and TB-Board Block Diagram

6.5. T, TA, and TB-Board Schematic Diagram

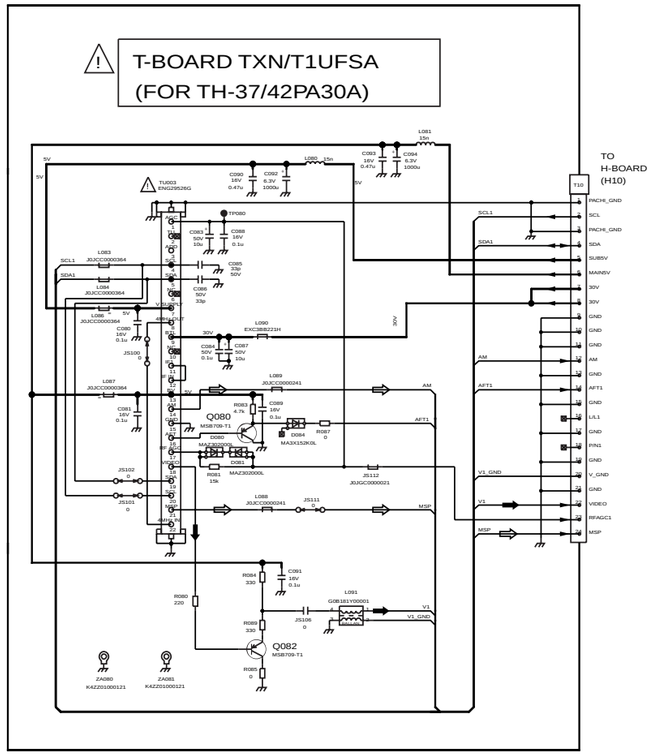

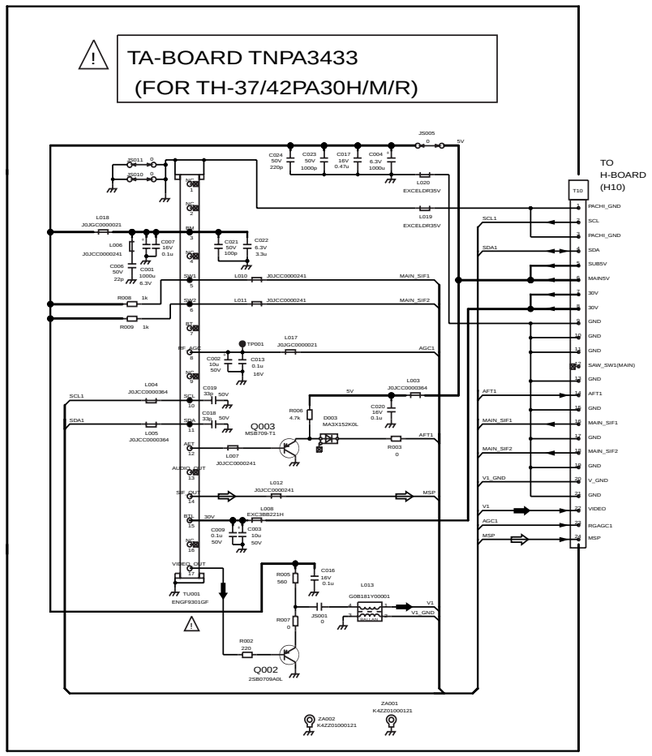

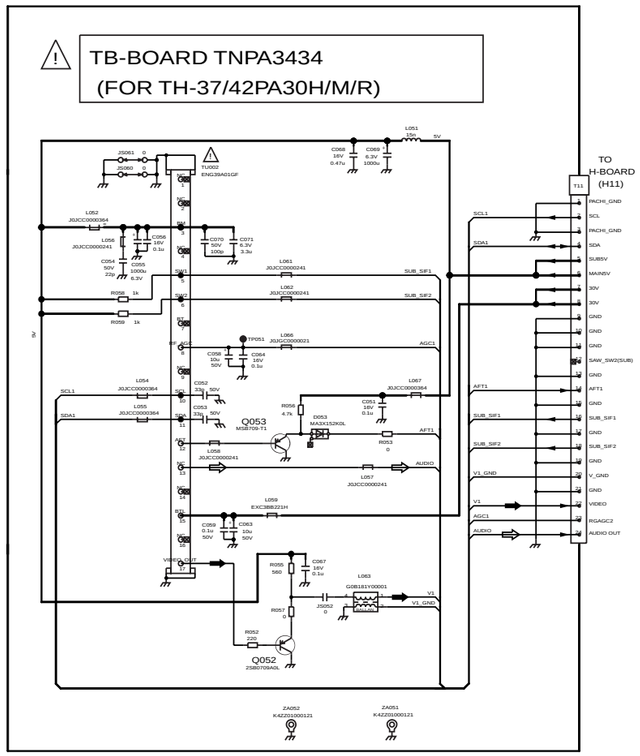

TH-37PA30A,TH-37/42PA30H/M/R
T, TA, and TB-Board Schematic Diagram

6.6. H-Board (1 of 2) Schematic Diagram

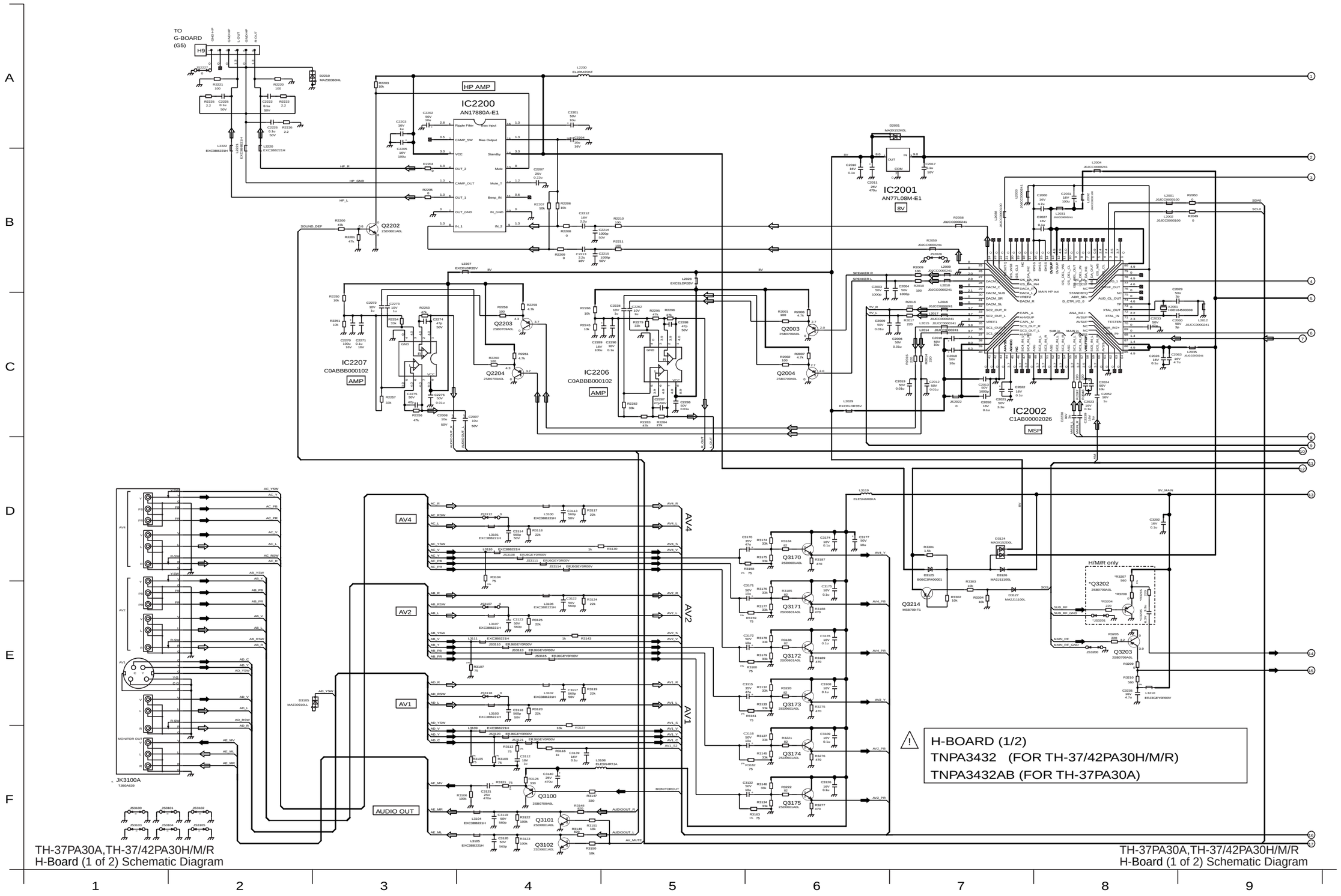

TH-37PA30A,TH-37/42PA30H/M/R
H-Board (1 of 2) Schematic Diagram

TH-37PA30A,TH-37/42PA30H/M/R
H-Board (1 of 2) Schematic Diagram

6.7. H-Board (2 of 2) Schematic Diagram

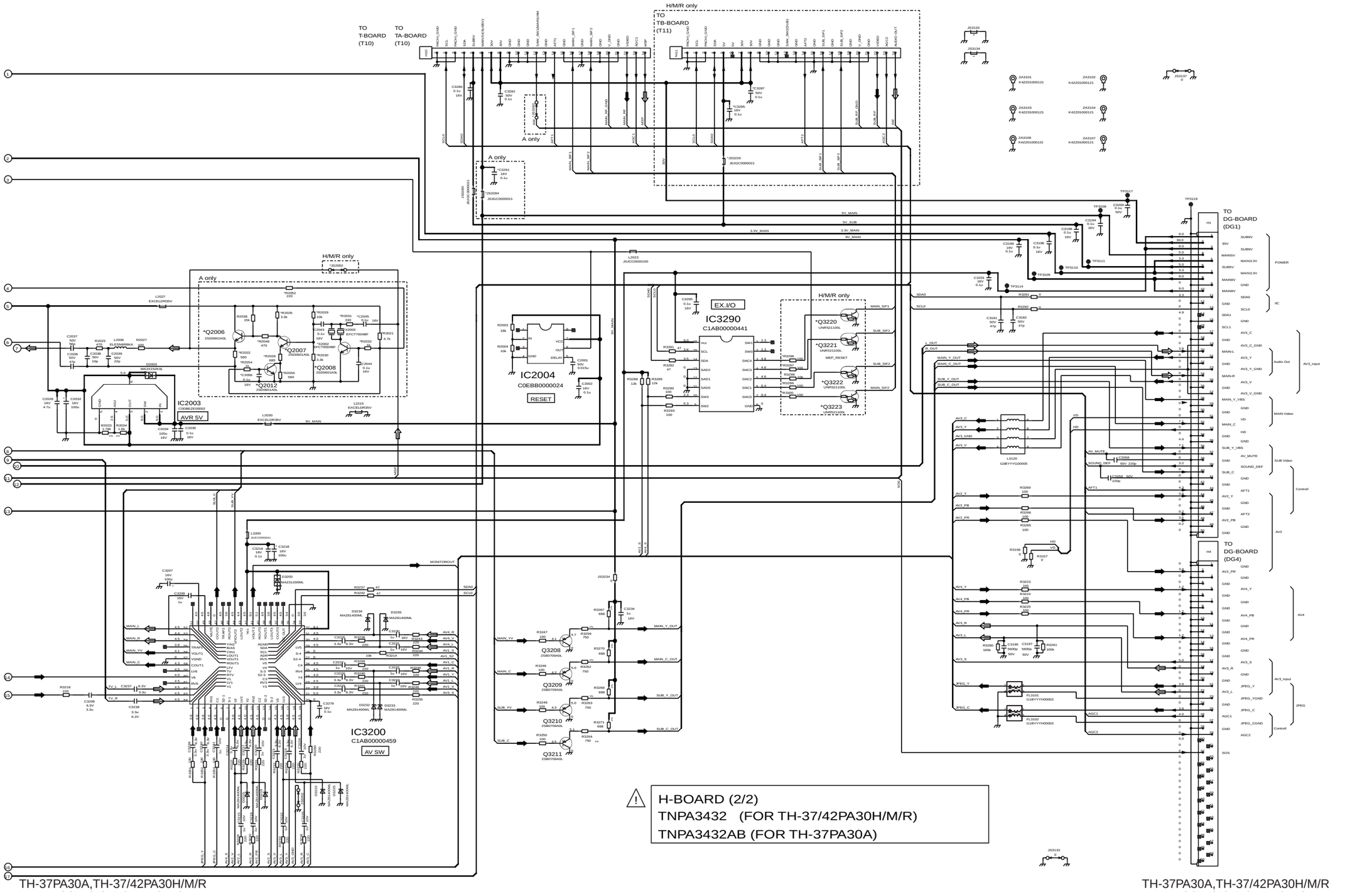

TH-37PA30A,TH-37/42PA30H/M/R
H-Board (2 of 2) Schematic Diagram

TH-37PA30A,TH-37/42PA30H/M/R
H-Board (2 of 2) Schematic Diagram

6.8. DG-Board (1 of 2) Block Diagram

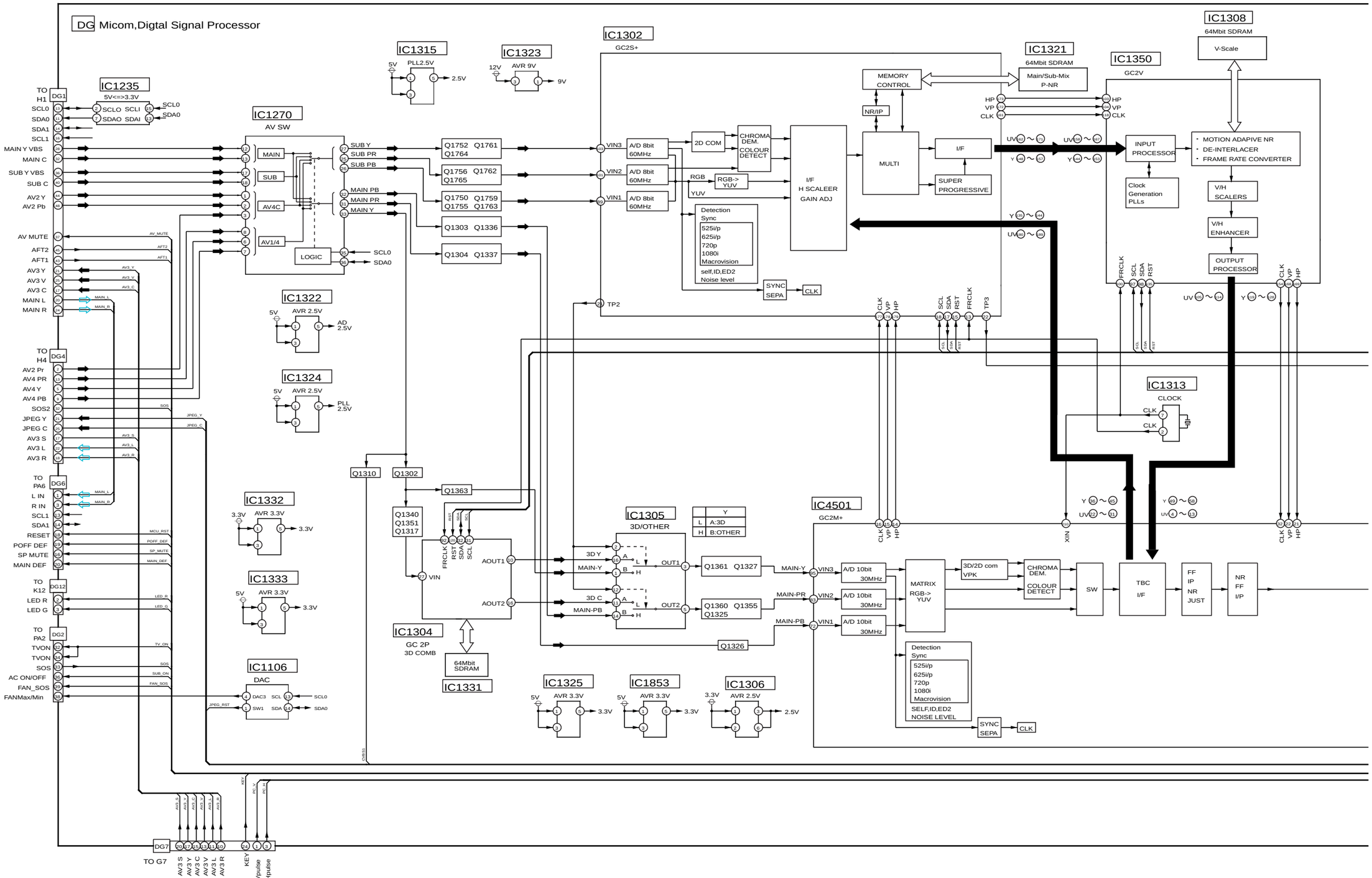

TH-37PA30A,TH-37/42PA30H/M/R
DG-Board (1 of 2) Block Diagram

TH-37PA30A,TH-37/42PA30H/M/R
DG-Board (1 of 2) Block Diagram

6.9. DG-Board (2 of 2) Block Diagram

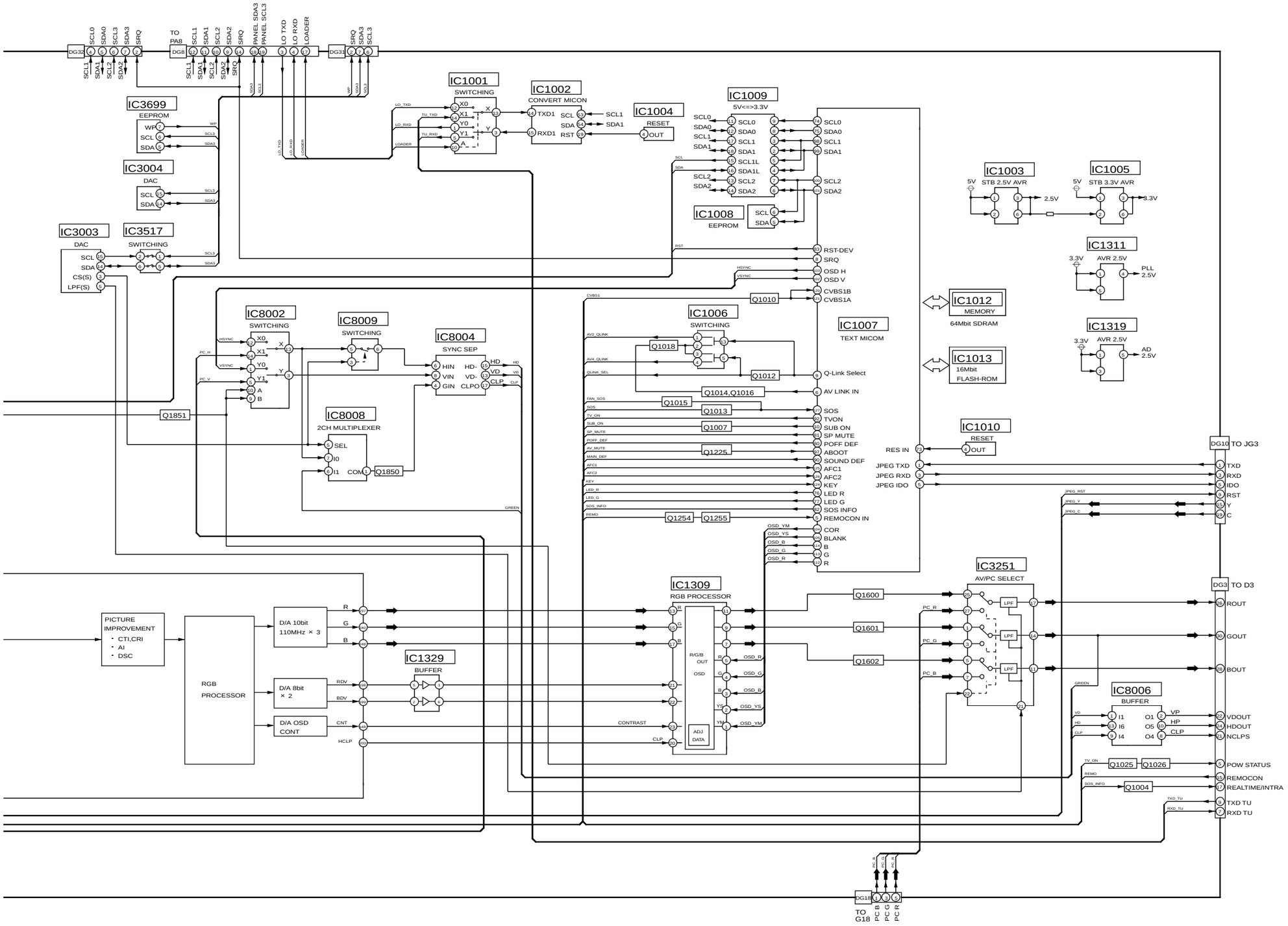

TH-37PA30A,TH-37/42PA30H/M/R
DG-Board (2 of 2) Block Diagram

6.10. DG-Board (1 of 8) Schematic Diagram

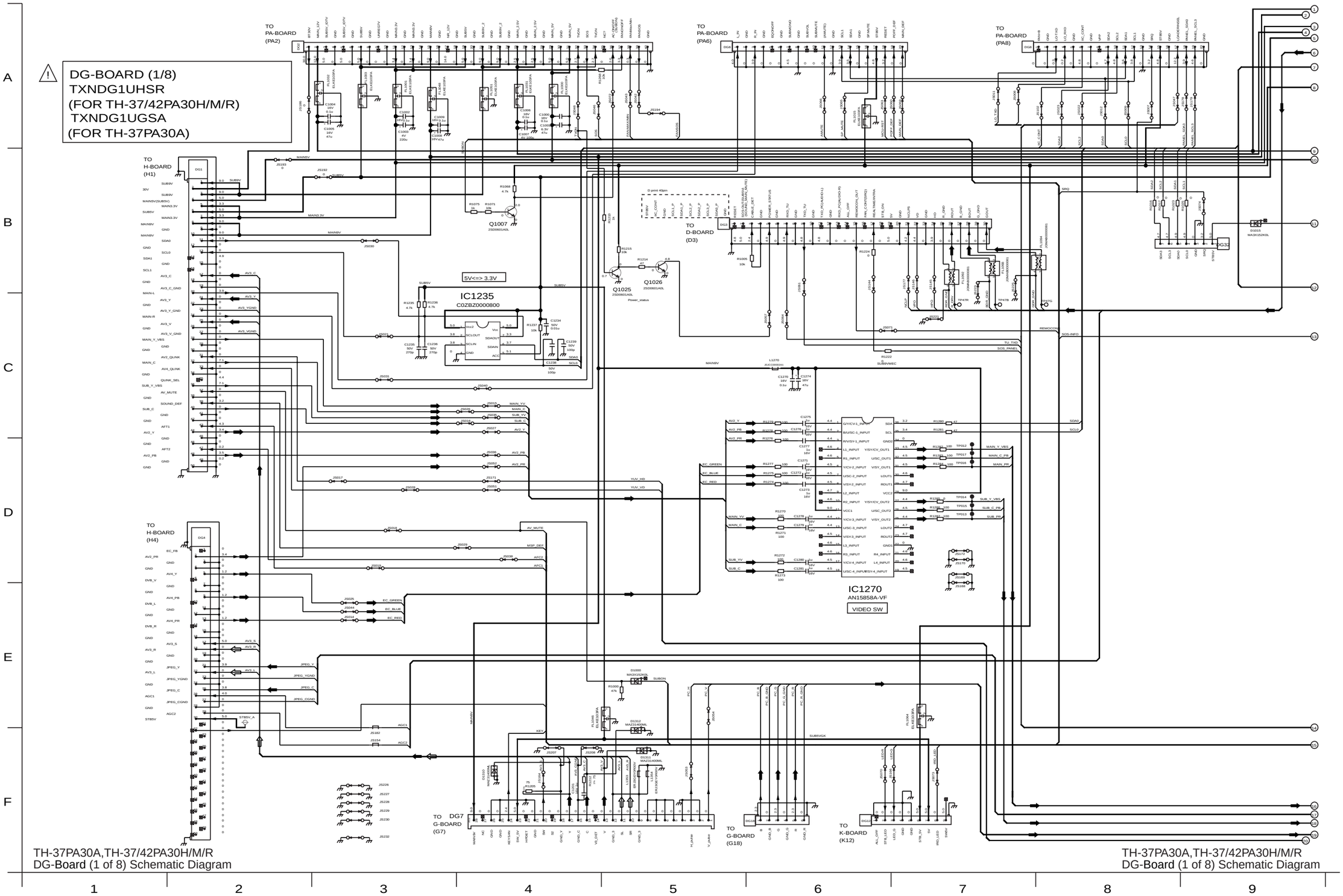

6.11. DG-Board (2 of 8) Schematic Diagram

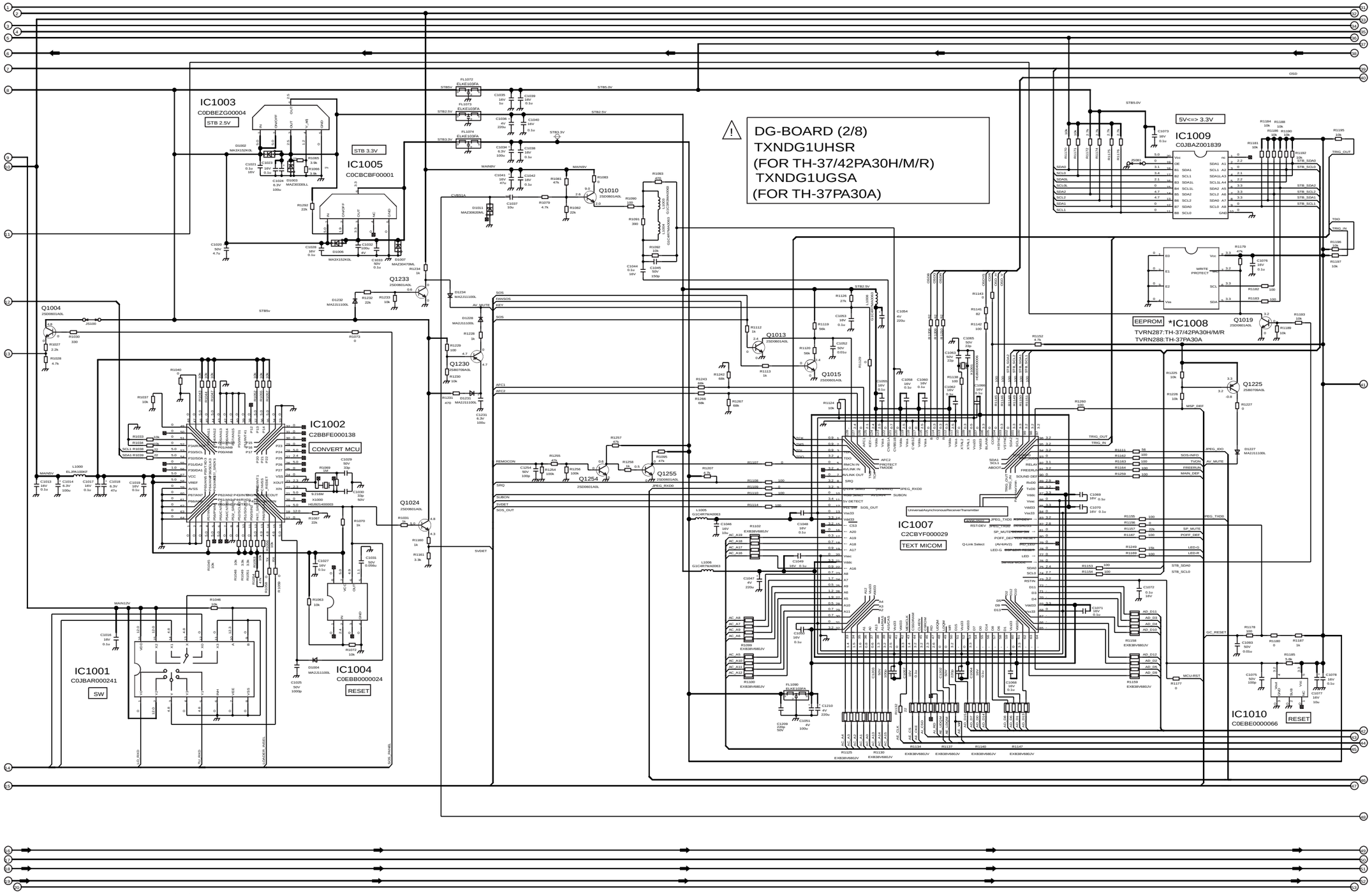

TH-37PA30A,TH-37/42PA30H/M/R
DG-Board (2 of 8) Schematic Diagram

TH-37PA30A,TH-37/42PA30H/M/R
DG-Board (2 of 8) Schematic Diagram

10 11 12 13 14 15 16 17 18

6.12. DG-Board (3 of 8) Schematic Diagram

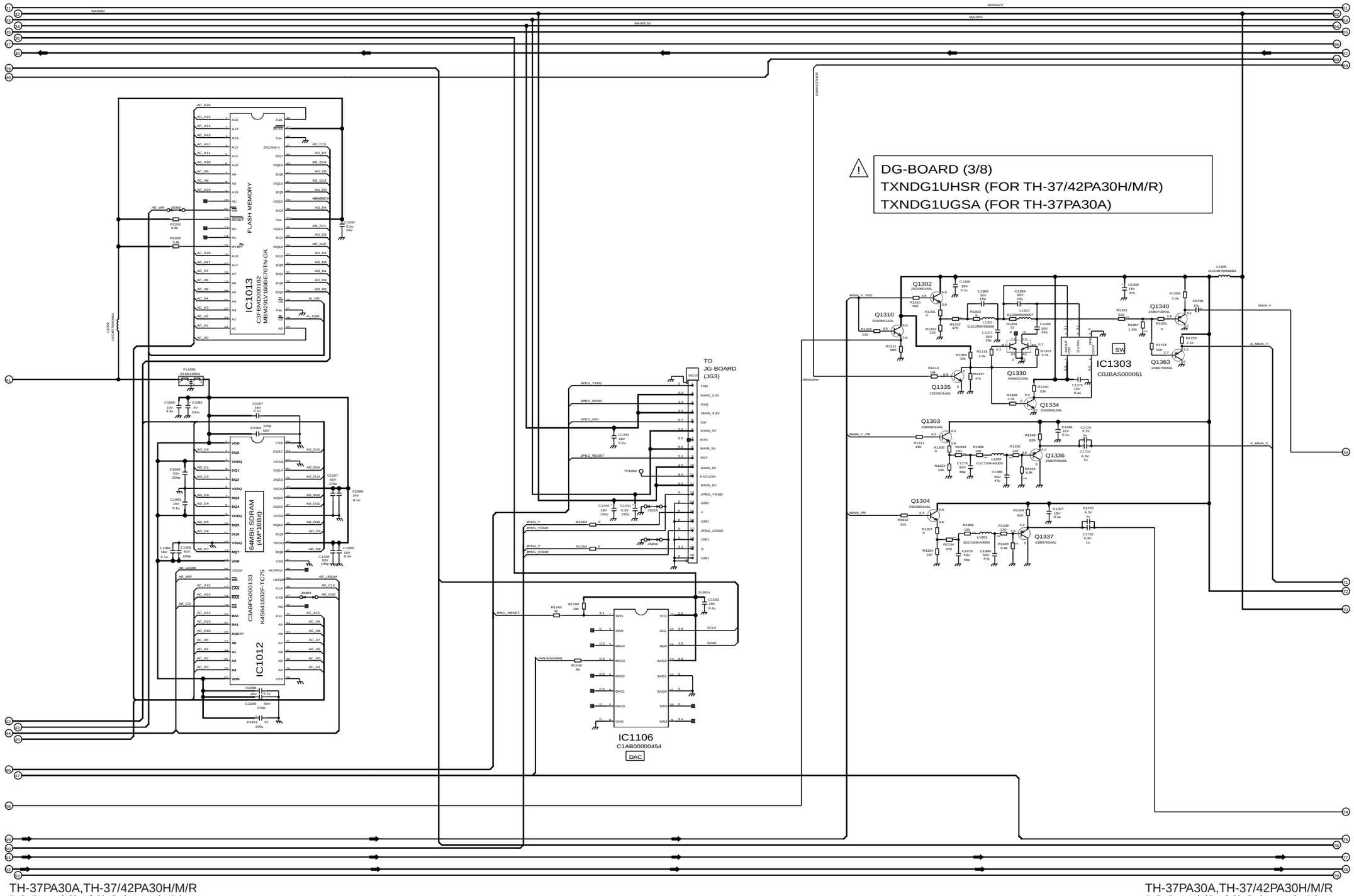

TH-37PA30A,TH-37/42PA30H/M/R
DG-Board (3 of 8) Schematic Diagram

TH-37PA30A,TH-37/42PA30H/M/R
DG-Board (3 of 8) Schematic Diagram

19 20 21 22 23 24 25 26 27

6.13. DG-Board (4 of 8) Schematic Diagram

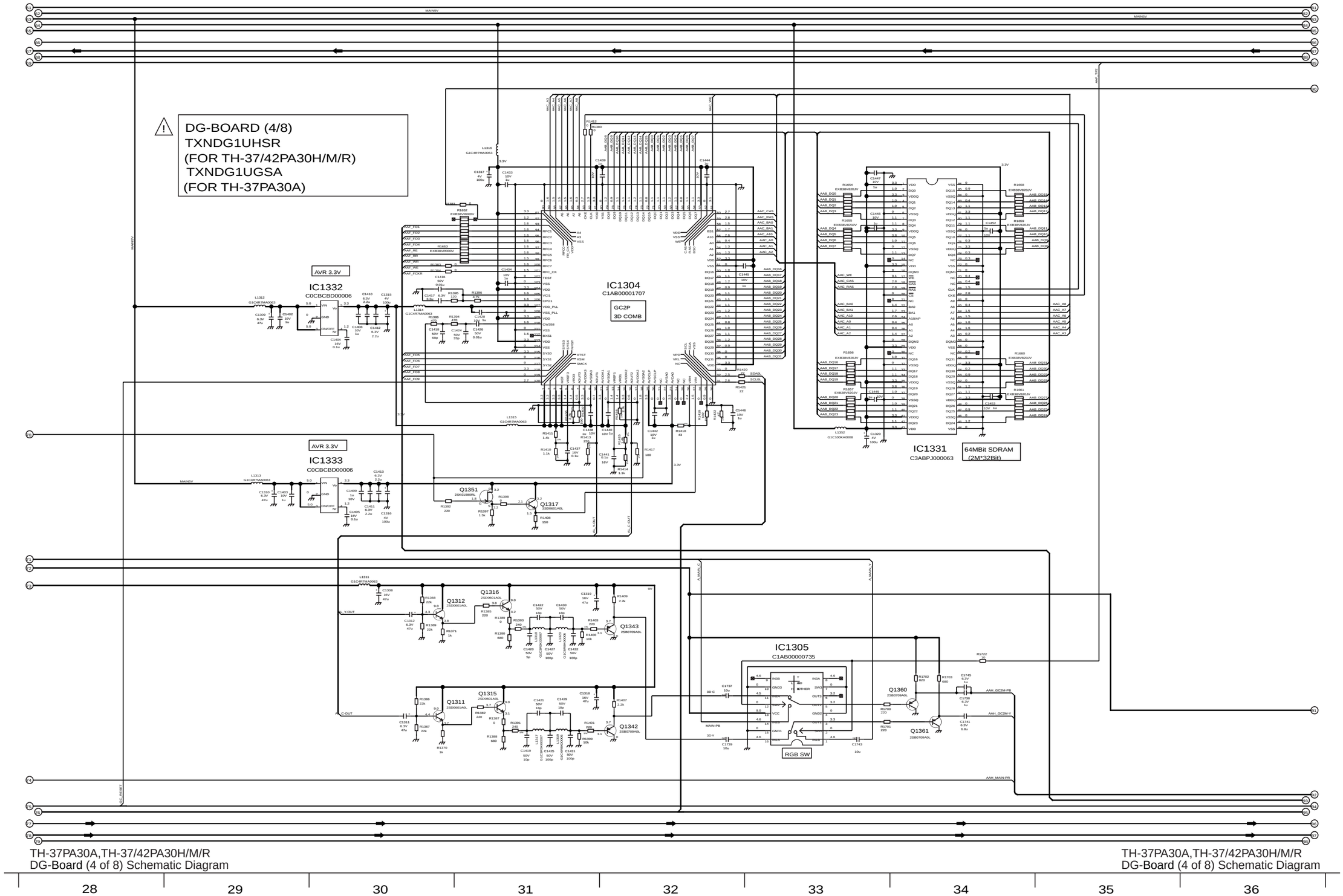

TH-37PA30A,TH-37/42PA30H/M/R
DG-Board (4 of 8) Schematic Diagram

TH-37PA30A,TH-37/42PA30H/M/R
DG-Board (4 of 8) Schematic Diagram

28 29 30 31 32 33 34 35 36

6.14. DG-Board (5 of 8) Schematic Diagram

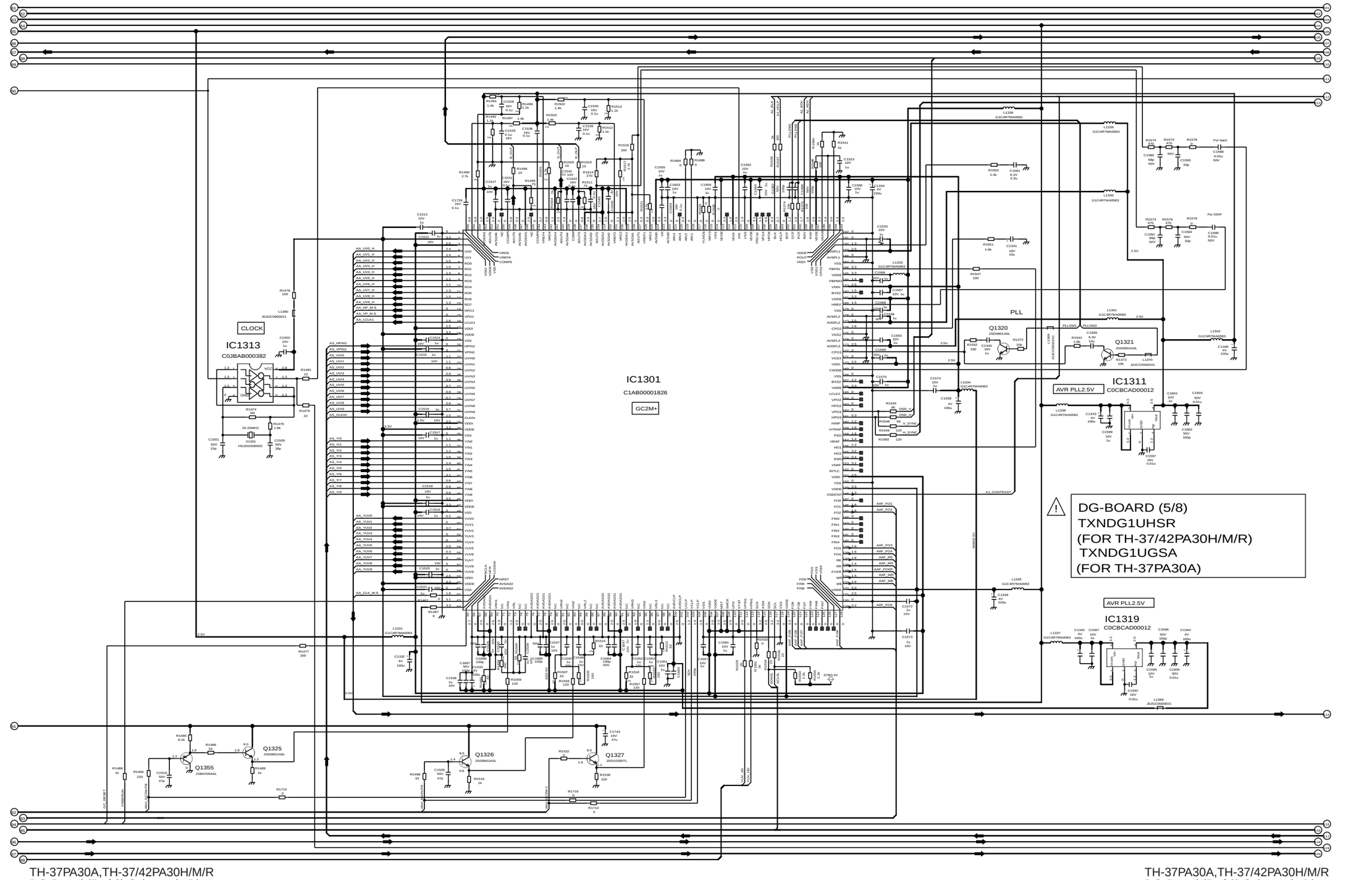

TH-37PA30A,TH-37/42PA30H/M/R
DG-Board (5 of 8) Schematic Diagram

TH-37PA30A,TH-37/42PA30H/M/R
DG-Board (5 of 8) Schematic Diagram

37 38 39 40 41 42 43 44 45

6.15. DG-Board (6 of 8) Schematic Diagram

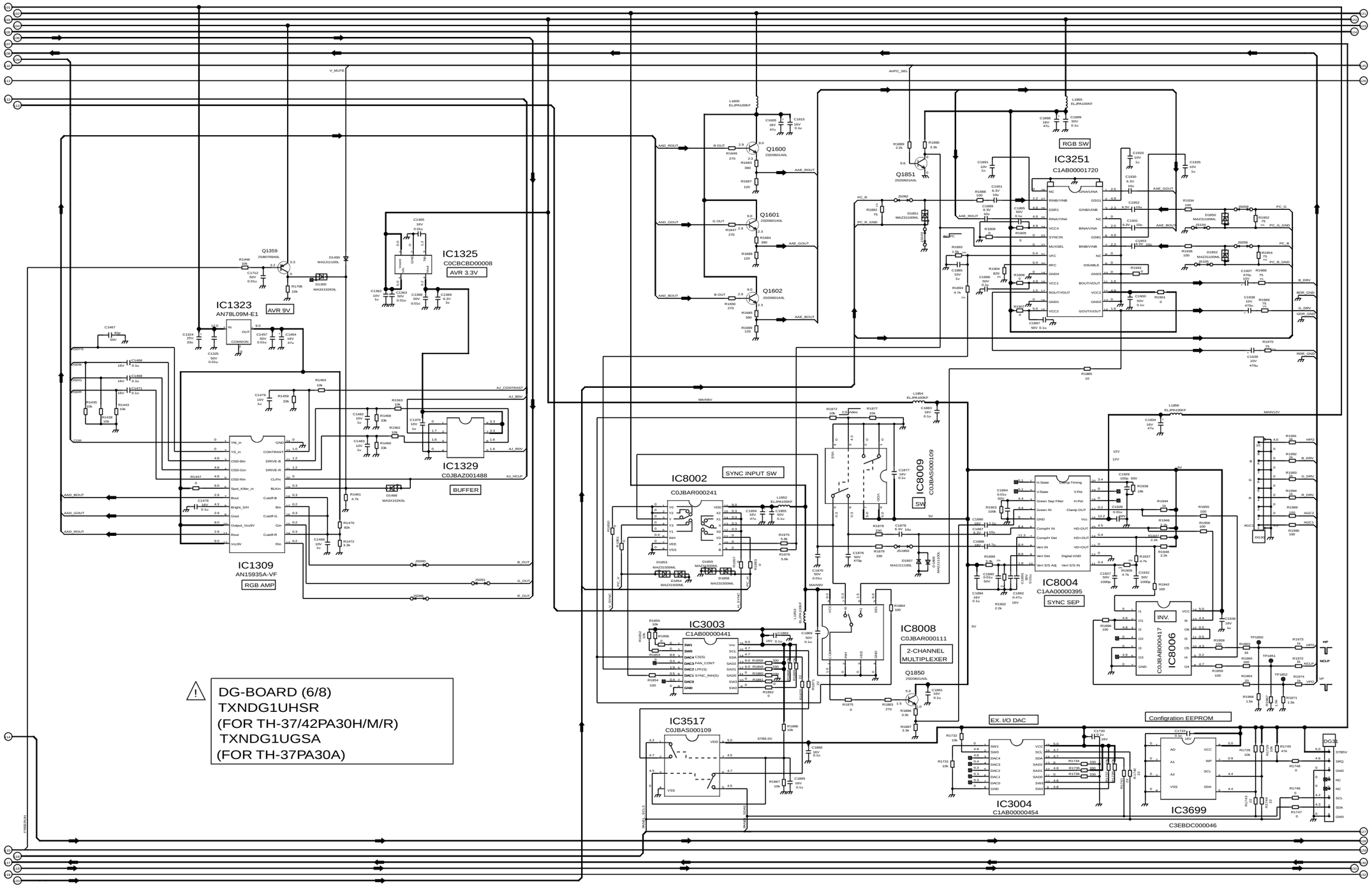

TH-37PA30A,TH-37/42PA30H/M/R
DG-Board (6 of 8) Schematic Diagram

46 47 48 49 50 51 52 53 54

6.16. DG-Board (7 of 8) Schematic Diagram

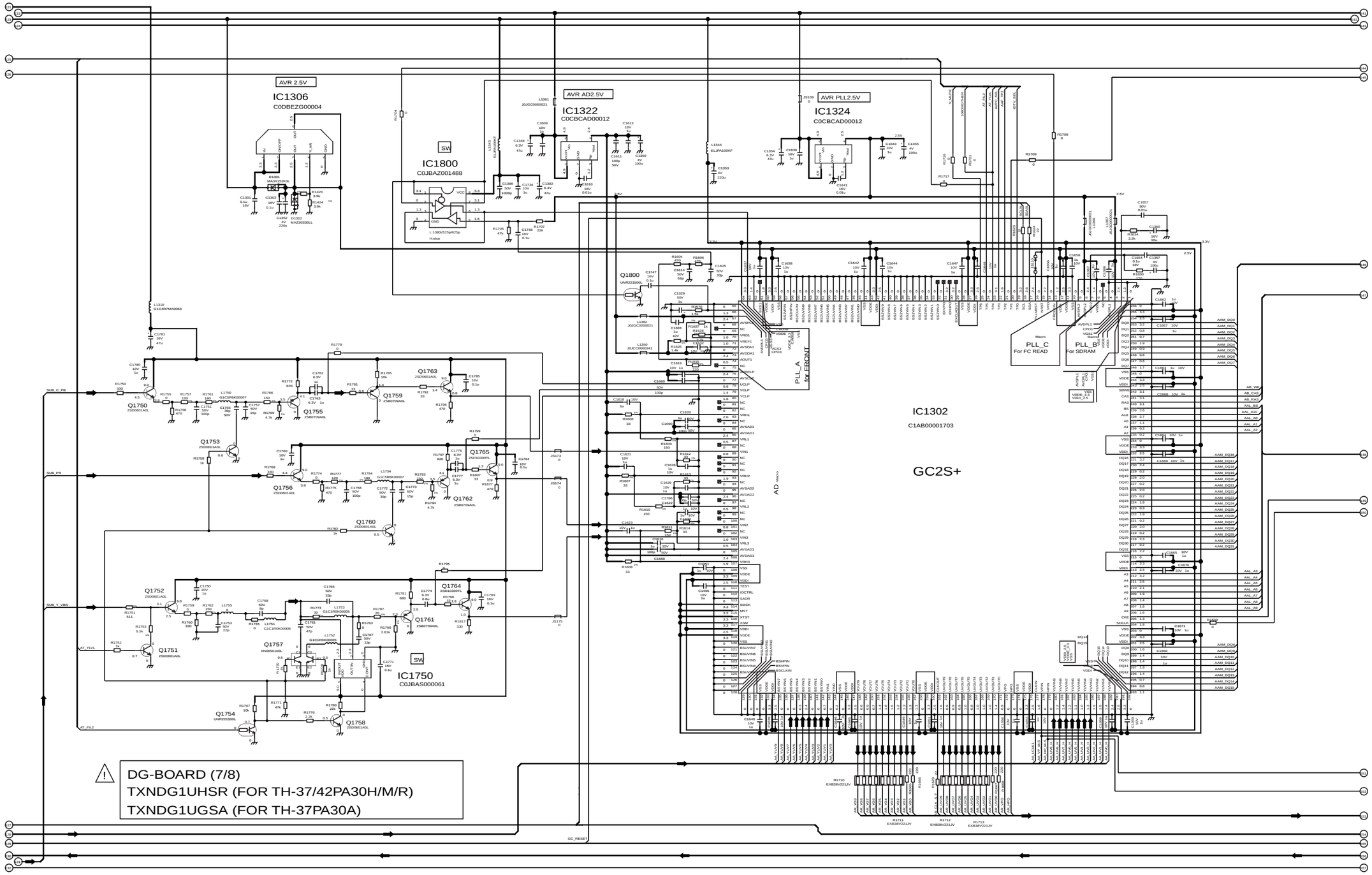

TH-37PA30A,TH-37/42PA30H/M/R
DG-Board (7 of 8) Schematic Diagram

55 56 57 58 59 60 61 62 63

6.17. DG-Board (8 of 8) Schematic Diagram

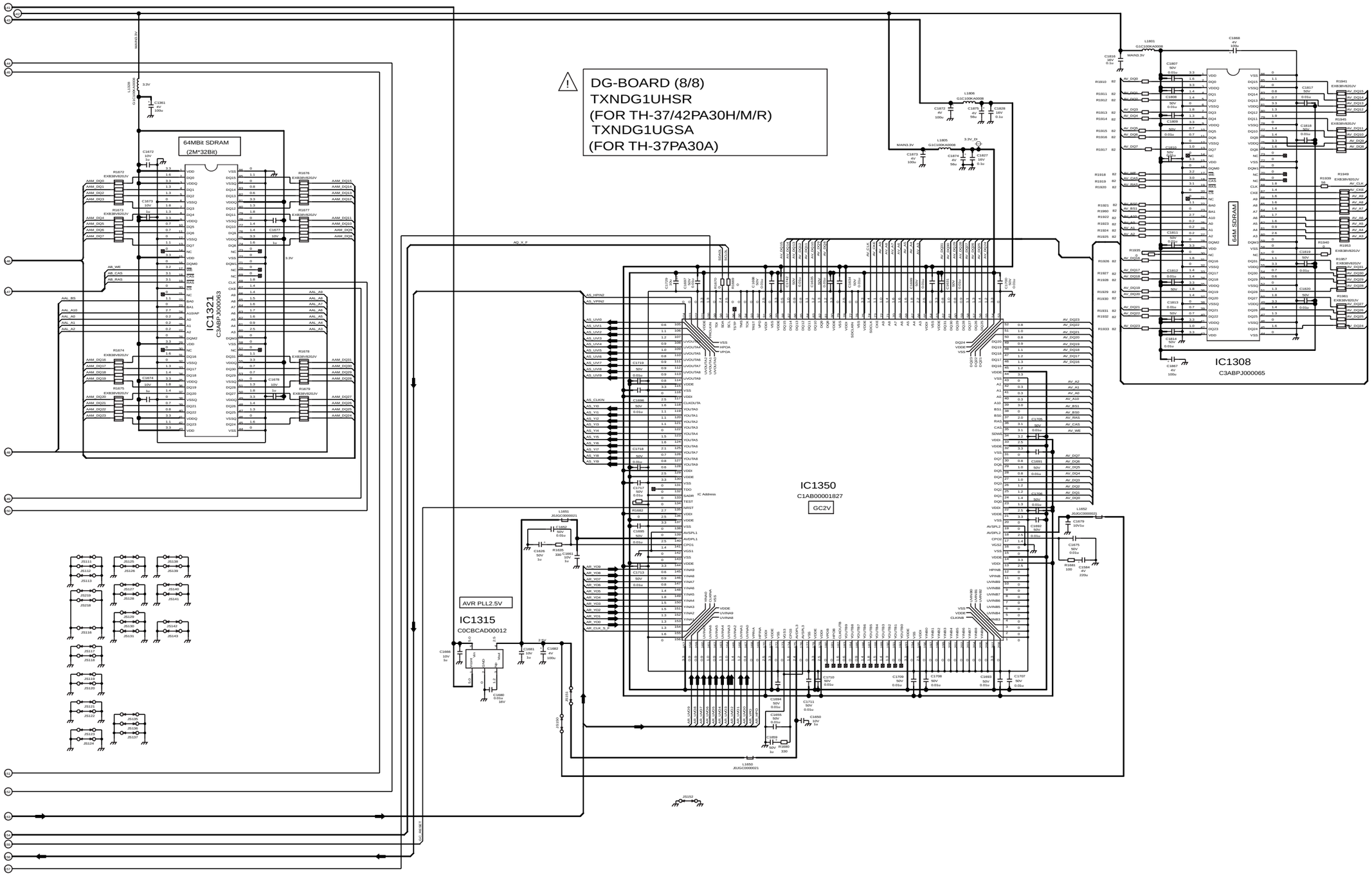

TH-37PA30A,TH-37/42PA30H/M/R
DG-Board (8 of 8) Schematic Diagram

TH-37PA30A,TH-37/42PA30H/M/R
DG-Board (8 of 8) Schematic Diagram

64 65 66 67 68 69 70 71 72

6.18. JG-Board Block Diagram

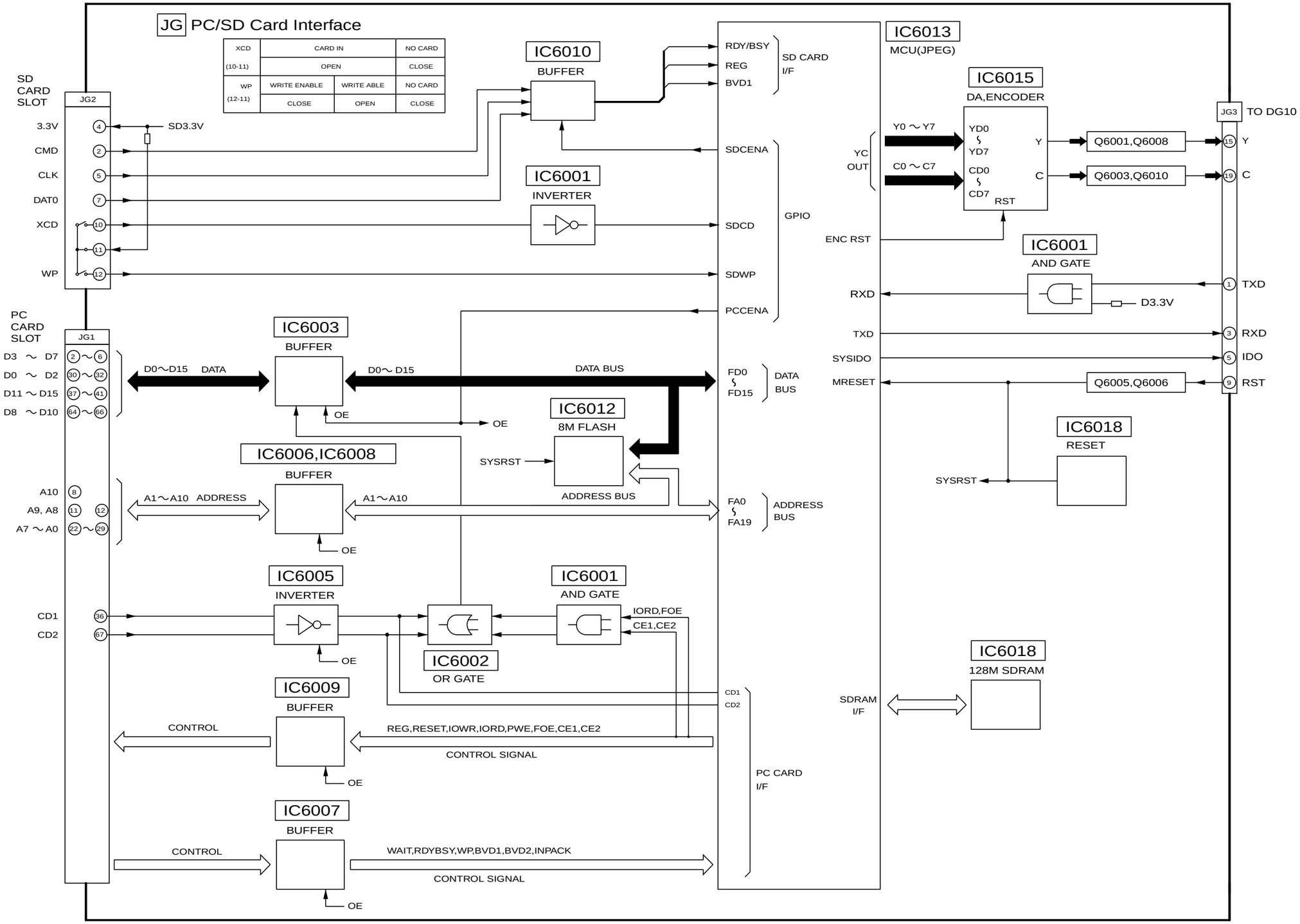

TH-37PA30A, TH-42PA30H/M/R
JG-Board Block Diagram

TH-37PA30A, TH-42PA30H/M/R
JG-Board Block Diagram

6.19. JG-Board (1 of 2) Schematic Diagram

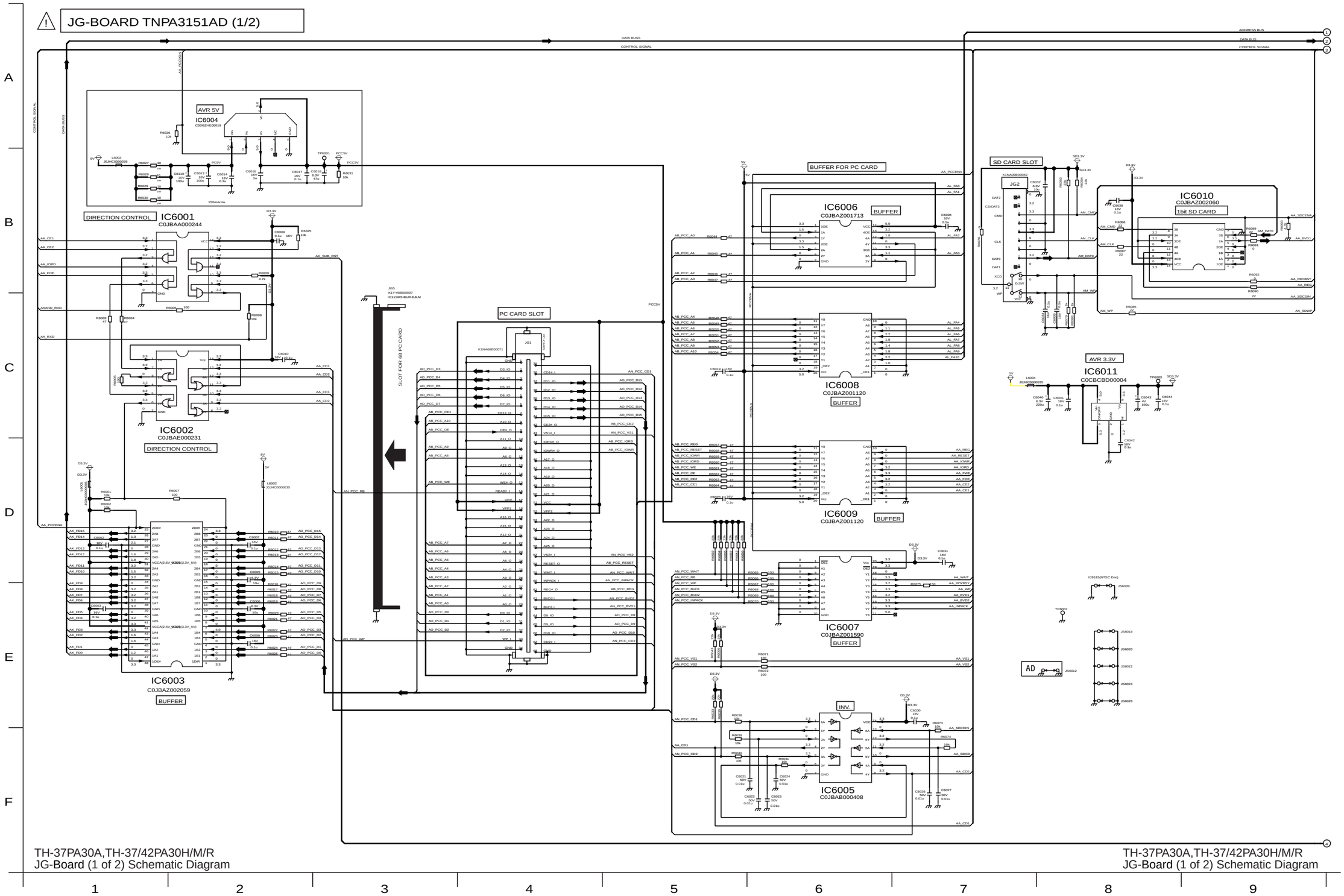

TH-37PA30A,TH-37/42PA30H/M/R
JG-Board (1 of 2) Schematic Diagram

6.20. JG-Board (2 of 2) Schematic Diagram

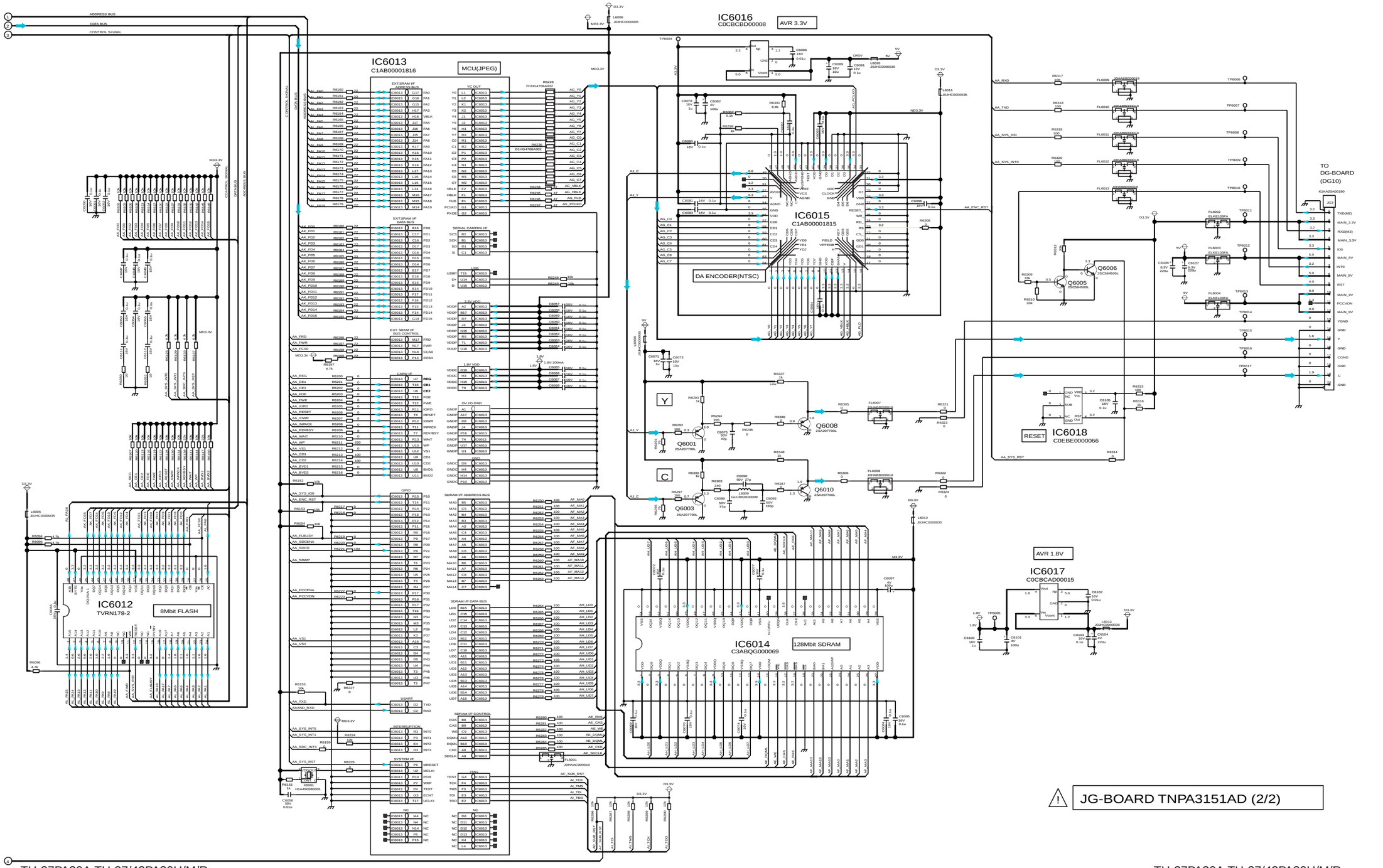

TH-37PA30A,TH-37/42PA30H/M/R
JG-Board (2 of 2) Schematic Diagram

6.21. G-Board Schematic Diagram

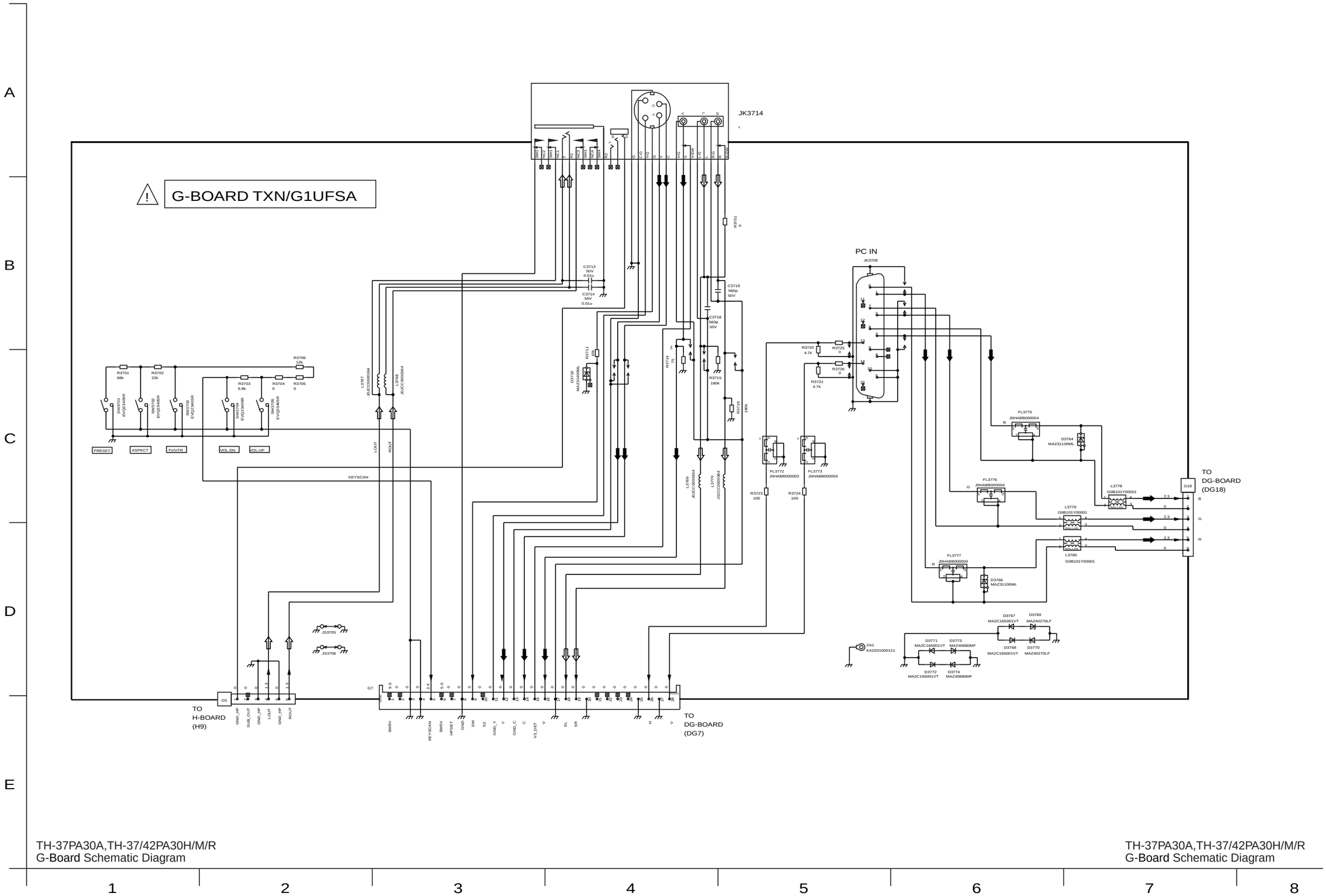

7 Parts Location

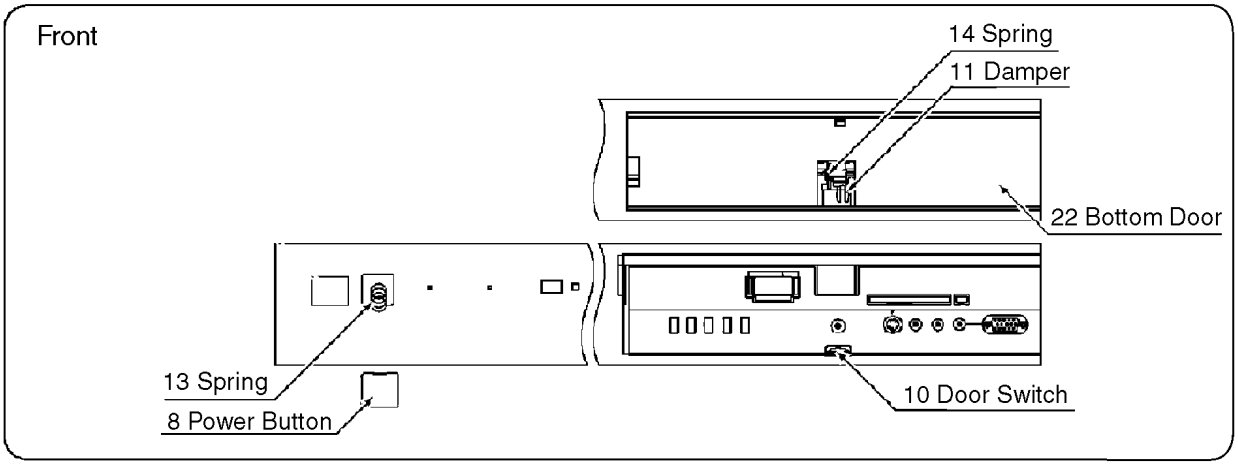

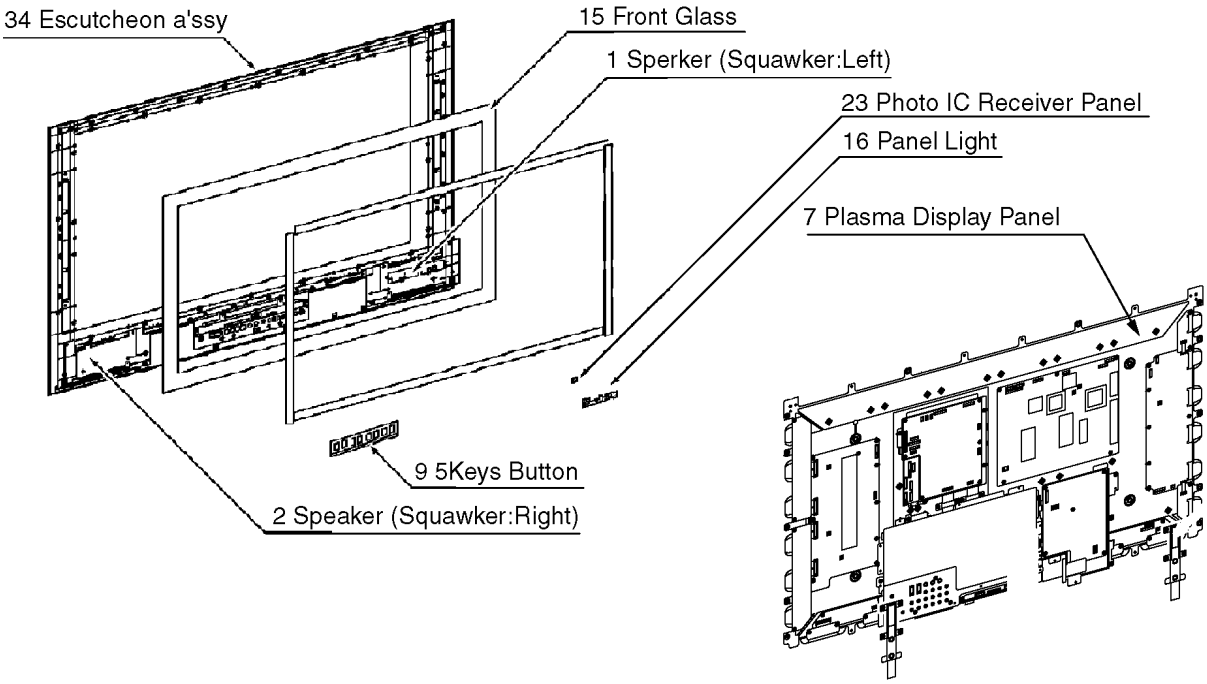

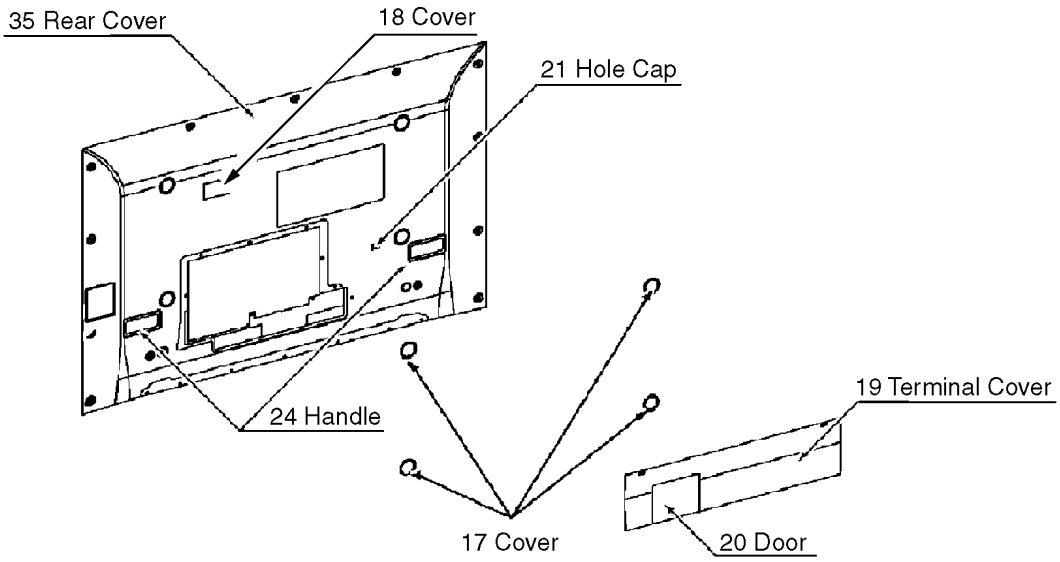

8 Packing Exploded Views

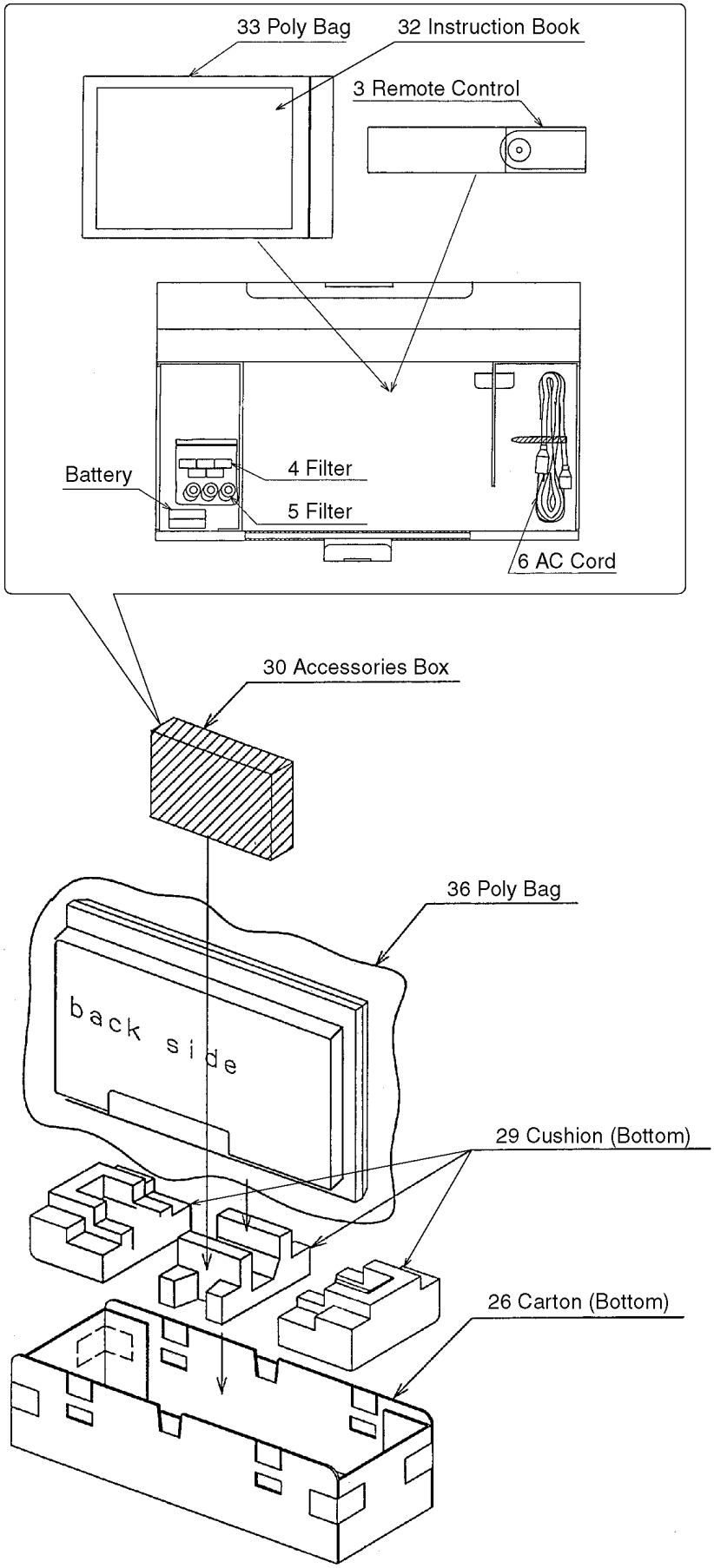

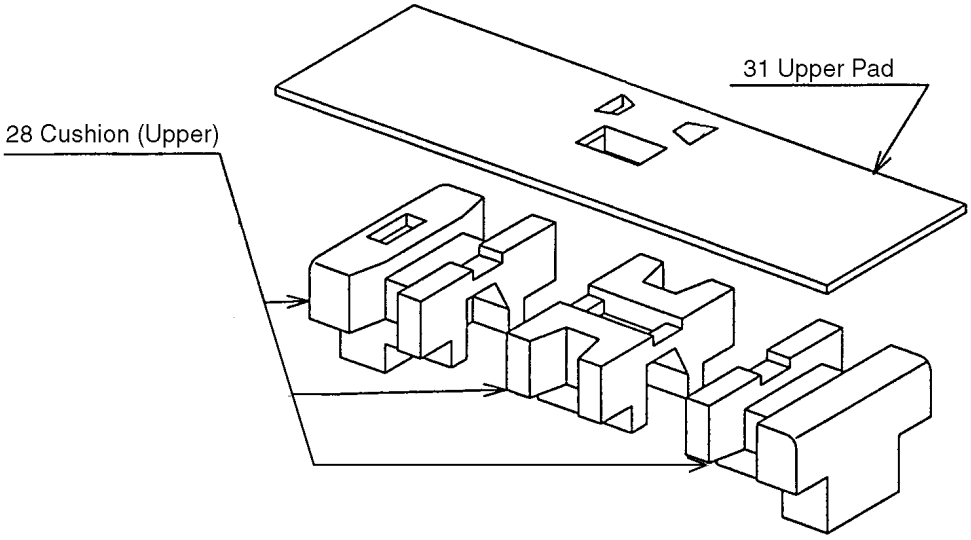
31 Upper Pad
28 Cushion (Upper)

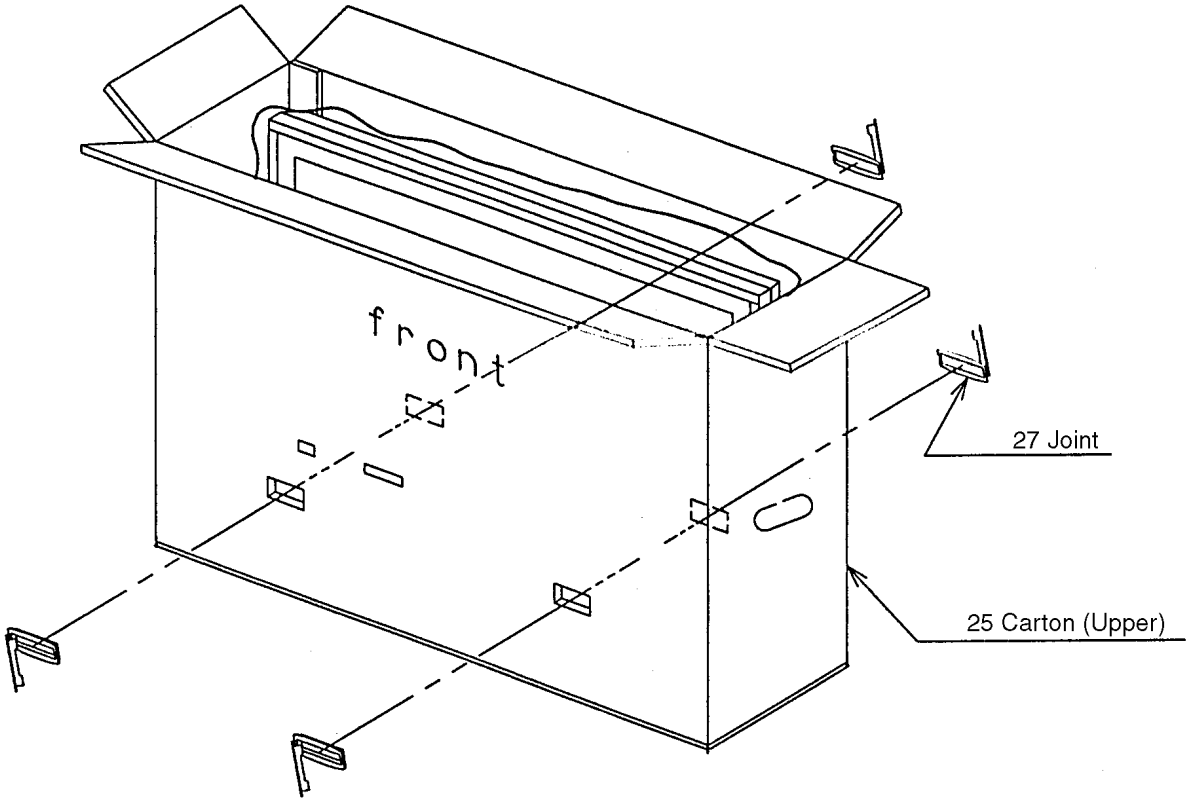
front
27 Joint
25 Carton (Upper)

9 Mechanical Replacement Parts List

Ref. No.	Part No.	Part Name & Description	Pcs	Remarks
	EAB826AL2	SPEAKER (LEFT)	1	TH-37PA30A/H/M/R
	EAB826AR2	SPEAKER (RIGHT)	1	TH-37PA30A/H/M/R
	EAB827AL2	SPEAKER(LEFT)	1	TH-42PA30H/M/R
	EAB827AR2	SPEAKER(RIGHT)	1	TH-42PA30H/M/R
1	EAK7H12BL2	SPEAKER(SCOKER:LEFT)	1	
2	EAK7H12BR2	SPEAKER(SCOKER:RIGHT)	1	
3	EUR7635040	REMOTE CONTROL	1	
	J0KD00000041	FLAT CORE	1	
	J0KD00000071	FLAT CORE	2	
4	J0KF00000018	FILTER	5	
	J0KG00000011	FLAT CORE	3	
5	J0KG00000014	FILTER	2	
	K1LB04A00055	CONNECTOR	1	
	K1SZBDBA0002	IEC JACK	1	
	K1TZA9D00093	IF CABLE	1	
	K2AH3H000028	AC INLET	1	⚠
6	K2CK3DH00029	AC CORD	1	TH-37PA30A ⚠
6	K2CN3DH00007	AC CORD	1	TH-37/42PA30M/R ⚠
6	K2CT3DH00020	AC CORD	1	TH-37/42PA30H/M ⚠
7	MD37S06A1J	PLASMA DISPLAY PANEL	1	TH-37PA30A/H/M/R ⚠
7	MD42S07A1J	PLASMA DISPLAY PANEL	1	TH-42PA30H/M/R ⚠
8	TBXA39901	POWER BUTTON	1	
9	TBXA40003	5KEYS BUTTON	1	
10	TEK6935	DOOR SWITCH	1	
11	TEKC011	DAMPER	1	
13	TES4G204	SPRING	1	
14	TESD060	SPRING	1	
	THEL023Z	SCREW	24	
	THEL027N	SCREW	3	
	THEL035N	SCREW	73	
	THNA004N	SCREW	1	
	THTF003Y	SCREW	19	
	THW40973N	WASHER	1	
	THW70035Y	WASHER	1	
15	TKGA5120T	FRONT GLASS	1	TH-42PA30H/M/R
15	TKGA5123T	FRONT GLASS	1	TH-37PA30A/H/M/R
16	TKKC5175-1	PANEL LIGHT	1	
17	TKKL5231-1	COVER	4	
18	TKKL5269-1	COVER	1	
19	TKKL5275	TERMINAL COVER	1	
20	TKKL5276	DOOR	1	
21	TKKL5277-2	HOOL CAP	2	
22	TKPA80002	BOTTOM DOOR	1	
23	TKPA80701	PHOTO IC RECEIVER PANEL	1	
24	TKRA19904A	HANDLE	2	
	TMKG288	CUSHION(TKG/UPPER/BOTTOM)	2	
	TMKG289	CUSHION(TKG/LEFT/RIGHT)	2	
	TMM15414-2	CLAMPER	3	
	TMM17499	CLAMPER	2	
	TMM25401	CLAMPER	8	
	TMM7464-2	CLAMPER	2	
	TMM81488	CLAMPER	1	
	TMME047	CLAMPER	7	
	TMME061	CLAMPER	5	

Ref. No.	Part No.	Part Name & Description	Pcs	Remarks
	TMME075	EADG SADOLE	9	
	TMME077	CLAMPER	1	
	TMME108	CABLE STRAP	1	
	TMME152	CLAMPER	1	
	TMME190	CLAMPER	3	
	TMME199	CLAMPER	1	
	TMME206	CLAMPER	2	
	TMMJ044	RUBBER BUSH	7	
	TMMX095	BRACKET	2	
	TMMX102	SPACER	4	
	TMXX021-1	CORE HOLDER	2	
25	TPCB46106	CARTON BOX	1	TH-42PA30H ⚠
25	TPCB46107	CARTON BOX	1	TH-42PA30M ⚠
25	TPCB46108	CARTON BOX	1	TH-42PA30R ⚠
26	TPCB46201	BOTTOM CARTON	1	TH-42PA30H/M/R
25	TPCB46305	CARTON BOX	1	TH-37PA30H ⚠
25	TPCB46306	CARTON BOX	1	TH-37PA30M ⚠
25	TPCB46307	CARTON BOX	1	TH-37PA30A ⚠
25	TPCB46308	CARTON BOX	1	TH-37PA30R ⚠
26	TPCB46401	BOTTOM CARTON	1	TH-37PA30A/H/M/R
27	TPD169487	JOINT	4	
28	TPDA0820-1	CUSHION(UPPER)	1	
29	TPDA0821-1	CUSHION(BOTTOM)	1	
	TPDA0862-1	CORNER PAD(RIGHT)	1	
	TPDA0863-1	CORNER PAD(LEFT)	1	
30	TPDF0737	PAPER BOX	1	
31	TPDF1109	UPPER PAD	1	TH-42PA30H/M/R
31	TPDF1118	UPPER PAD	1	TH-37PA30A/H/M/R
	TPEH170	PROTECT COVER	1	
32	TQBC0867	INSTRUCTION BOOK(ENGLISH)	1	TH-37PA30A ⚠
32	TQBC0868	INSTRUCTION BOOK(ENGLISH)	1	TH-37/42PA30H/M ⚠
32	TQBC0869	INSTRUCTION BOOK(ARABIA)	1	TH-37/42PA30M ⚠
32	TQBC0870	INSTRUCTION BOOK(RUSSIA)	1	TH-37/42PA30R ⚠
32	TQBC0871	INSTRUCTION BOOK(UKRAINE)	1	TH-37/42PA30R ⚠
32	TQBC0873	INSTRUCTION BOOK(CHINA)	1	TH-37/42PA30H ⚠
33	TQEF035	POLY BAG	1	
	TQZH337	INSTRUCTION SHEET	1	
	TSXL139	CABLE SUS-FPC	6	
	TSXL222	CABLE(C1-C2)	1	
	TSXL231	CABLE SCN-FPC	6	
	TSXL278	CABLE(D-C1/2)	2	
	TSXL323	CABLE(DG7-G7)	1	
34	TTEA0211	ESCUTCHEON	1	TH-42PA30H/M/R ⚠
34	TTEA0212	ESCUTCHEON	1	TH-37PA30A/H/M/R ⚠
35	TTUA0995	REAR COVER	1	TH-42PA30H/M ⚠
35	TTUA0996	REAR COVER	1	TH-42PA30R ⚠
35	TTUA0997	REAR COVER	1	TH-37PA30A/H/M ⚠
35	TTUA0998	REAR COVER	1	TH-37PA30R ⚠
	TXFMZ010QKS	STAND POOL BRACKET	2	
	TXJPA3UHSE	SPEAKER LEAD (LEFT/RIGHT)	1	
	TXJTNRQCSC	RF CABLE	1	
	XTB4+10A	SCREW	22	
	XTB4+12AFZ	SCREW	20	
	XTB4+12J	SCREW	29	
	XTB4+15A	SCREW	6	

Ref. No.	Part No.	Part Name & Description	Pcs	Remarks
	XTB4+15AFZ	SCREW	10	
	XTB4+20A	SCREW	4	
	XTV3+10JFZ	SCREW	3	
	XTW3+8T	SCREW	2	
	XTW4+Z15D	SCREW	7	
	XYC4+FJ35FZ	SCREW	10	
	XYN3+F10	SCREW	13	
	XYN3+F10FZ	SCREW	2	
	XYN3+F6	SCREW	2	
	XYN3+F8	SCREW	40	
	XYN3+J8	SCREW	9	
	XYN4+E8	SCREW	1	
	XYN5+C20	SCREW	8	
	XZBT6506	POLY BAG	1	

10 Replacement Parts List

10.1. Replacement Parts List Notes

Important Safety Notice

Components identified by ⚠ mark have special characteristics important for safety.
When replacing any of these components, use only manufacturer's specified parts.

RTL (Retention Time Limited)

Note: The marking (RTL) indicates that the Retention Time is Limited for this item.
After the discontinuation of this assembly in production, the item will continue to be available for a specific period of time. The retention period of availability is dependant on the type of assembly, and in accordance with the laws governing part and product retention.
After the end of this period, the assembly will no longer be available.

Abbreviation of part name and description

1. Resistor

Example:

ERD25TJ104 C 100KOHM, J, 1/4W

Type Allowance

2. Capacitor

Example:

ECKF1H103ZF C 0.01UF, Z, 50V

Type Allowance

Type	Allowance
C : Carbon	F : ±1%
F : Fuse	G : ±2%
M : Metal Oxide Metal FIlm	J : ±5%
S : Solid	K : ±10%
W : Wire Wound	M : ±20%

Type	Allowance
C : Ceramic	C : ±0.25pF
E : Electrolytic	D : ±0.5pF
P : Polyester Polyprop lene	F : ±1pF
	G : ±3pF
	J : ±5pF
T : Tantalum	K : ±10pF
	L : ±15pF
	M : ±20pF
	P : +100%, -0%
	Z : +80%, -20%

10.2. Electrical Replacement Part List

Ref. No.	Part No.	Part Name & Description	Pcs	Remarks
F902	K5D312BL0008	FUSE	1	⚠
F900.901	K5D802BNA003	FUSE	2	⚠
C001	ECA0JM102	E 1000UF, 6.3V	1	TH-37/42PA30H/M/R
C002,03	ECA1HM100	E 10UF, 50V	2	TH-37/42PA30H/M/R
C004	ECA0JM102	E 1000UF, 6.3V	1	TH-37/42PA30H/M/R
C006	ECJ1XC1H220J	C 22PF, J, 50V	1	TH-37/42PA30H/M/R
C007	ECJ1XF1C104Z	C 0.1UF, Z, 16V	1	TH-37/42PA30H/M/R
C009	ECJ1VF1H104Z	C 0.1UF, Z, 50V	1	TH-37/42PA30H/M/R
C11	K1MN50B00026	50P CONNECTOR	1	
C12	K1MN20B00043	20P CONNECTOR	1	
C013	ECJ1XF1C104Z	C 0.1UF, Z, 16V	1	TH-37/42PA30H/M/R
C016	ECJ1XF1C104Z	C 0.1UF, Z, 16V	1	TH-37/42PA30H/M/R
C017	ECJ3VB1C474K	C 0.47UF, K, 16V	1	TH-37/42PA30H/M/R
C018,19	ECJ1XC1H330J	C 33PF, J, 50V	2	TH-37/42PA30H/M/R
C020	ECJ2VF1C104Z	C 0.1UF, Z, 16V	1	TH-37/42PA30H/M/R
C021	ECJ1XC1H101J	C 100PF, J, 50V	1	TH-37/42PA30H/M/R
C21	K1MN50B00026	50P CONNECTOR	1	
C022	ECJ3YB0J335K	C 33UF, J, 25V	1	TH-37/42PA30H/M/R
C22	K1MN20B00043	20P CONNECTOR	1	
C23	K1KA11A00102	11P CONNECTOR	1	
C24	K1KA08A00232	8P CONNECTOR	1	
C051	ECJ2VF1C104Z	C 0.1UF, Z, 16V	1	TH-37/42PA30H/M/R
C052,53	ECJ1XC1H330J	C 33PF, J, 50V	2	TH-37/42PA30H/M/R
C054	ECJ1XC1H220J	C 22PF, J, 50V	1	TH-37/42PA30H/M/R
C055	ECA0JM102	E 1000UF, 6.3V	1	TH-37/42PA30H/M/R
C056	ECJ1XF1C104Z	C 0.1UF, Z, 16V	1	TH-37/42PA30H/M/R
C058	ECA1HM100	E 10UF, 50V	1	TH-37/42PA30H/M/R
C059	ECJ1VF1H104Z	C 0.1UF, Z, 50V	1	TH-37/42PA30H/M/R
C063	ECA1HM100	E 10UF, 50V	1	TH-37/42PA30H/M/R
C064	ECJ1XF1C104Z	C 0.1UF, Z, 16V	1	TH-37/42PA30H/M/R
C067	ECJ1XF1C104Z	C 0.1UF, Z, 16V	1	TH-37/42PA30H/M/R

Ref. No.	Part No.	Part Name & Description	Pcs	Remarks
C068	ECJ3VB1C474K	C 0.47UF, K, 16V	1	TH-37/42PA30H/M/R
C069	ECA0JM102	E 1000UF, 6.3V	1	TH-37/42PA30H/M/R
C070	ECJ1XC1H101J	C 100PF, J, 50V	1	TH-37/42PA30H/M/R
C080,81	ECJ1XF1C104Z	C 0.1UF, Z, 16V	2	TH-37PA30A
C083	ECA1HM100	E 10UF, 50V	1	TH-37PA30A
C084	ECJ1VF1H104Z	C 0.1UF, Z, 50V	1	TH-37PA30A
C085,86	ECJ1XC1H330J	C 33PF, J, 50V	2	TH-37PA30A
C087	ECA1HM100	E 10UF, 50V	1	TH-37PA30A
C088,89	ECJ1XF1C104Z	C 0.1UF, Z, 16V	2	TH-37PA30A
C090	ECJ3VB1C474K	C 0.47UF, K, 16V	1	TH-37PA30A
C091	ECJ1XF1C104Z	C 0.1UF, Z, 16V	1	TH-37PA30A
C092	ECA0JM102	E 1000UF, 6.3V	1	TH-37PA30A
C093	ECJ3VB1C474K	C 0.47UF, K, 16V	1	TH-37PA30A
C094	ECA0JM102	E 1000UF, 6.3V	1	TH-37PA30A
C071	ECJ3YB0J335K	C 33UF, J, 25V	1	TH-37/42PA30H/M/R
C300	EEVHB1C470P	E 47UF, 16V	1	
C301	ECJ3XB0J106M	C 10UF, M,6.3V	1	
C309	ECJ1VB1H103K	C 0.01UF, K, 50V	1	
C406	ECA2WHG100	E 10UF, 450V	1	
C407	ECJ2XB1H104K	C 0.1UF, K, 50V	1	
C408	ECKD3D392KBP	C 3900PF, K, 2KV	1	
C409	ECA1EHG470	E 47UF, 25V	1	
C411	ECJ2XB1H104K	C 0.1UF, K, 50V	1	
C412	ECA1HHG100	E 10UF, 50V	1	
C414	ECKD2H561KB2	C 560PF, K,500V	1	
C415	ECJ3VC1H472J	C 4700PF, J, 50V	1	
C416	EEUFC1C471	E 470UF, 16V	1	
C417	ECA1EHG470	E 47UF, 25V	1	
C418	ECA1CHG101	E 100UF, 16V	1	
C419	ECA1AHG471	E 4700UF, 10V	1	
C420	ECA1EHG101	E 100UF, 25V	1	
C421,22	ECQB1H104JF	P 0.1UF, J, 50V	2	
C423	ECJ2XB1H104K	C 0.1UF, K, 50V	1	
C424	ECKDNA471KB7	C 470PF, Z,	1	⚠
C451-53	ECKDAE472ZE	C 4700PF, Z,	3	⚠
C455	ECQE6105JF	P 1UF, J,630V	1	
C456	EEUFC1V331	E 330UF, 35V	1	
C457	ECQB1H103JF	P 0.01UF, J, 50V	1	
C458	ECJ2VC1H821J	C 820PF, J, 50V	1	
C459	EEUFC1H330	E 33UF, 50V	1	
C460	ECJ2XC1H101J	C 100PF, J, 50V	1	
C461	ECJ2XC1H331J	C 330PF, J, 50V	1	
C462	ECQB1H104JF	P 0.1UF, J, 50V	1	
C463	ECJ2XB1H103K	C 0.01UF, K, 50V	1	
C464	ECQB1H104JF	P 0.1UF, J, 50V	1	
C465	ECA1HHG010	E 1UF, 50V	1	
C466	ECKD3D101KBP	C 100PF, K, 2KV	1	
C468,69	EETHC2W331L	E 330UF, 450V	2	⚠
C470	ECA1EHG331	E 330UF, 25V	1	
C471	ECQB1H104JF	P 0.1UF, J, 50V	1	
C548	EEUEB1E101	E 100UF, 25V	1	
C549	EEUEB1H101	E 100UF, 50V	1	
C550	ECJ2XB1H103K	C 0.01UF, K, 50V	1	
C551,52	ECJ2XC1H471J	C 470PF, J, 50V	2	
C553	ECJ2XC1H102J	C 1000PF, J, 50V	1	
C554	ECJ2XC1H221J	C 220PF, J, 50V	1	
C555	EEUEB1E101	E 100UF, 25V	1	
C556	EEUEB1H220	E 22UF, 50V	1	
C557	ECQE6473KF	P 0.047UF, K,630V	1	
C558	ECKD3D101KBP	C 100PF, K, 2KV	1	
C559	ECQE6473KF	P 0.047UF, K,630V	1	
C560	ECKD3D221KBP	C 220PF, K, 2KV	1	
C561,62	ECJ3VC1H472J	C 4700PF, J, 50V	2	
C563	ECKDNA471KB7	C 470PF, Z,	1	⚠

Ref. No.	Part No.	Part Name & Description	Pcs	Remarks
C564	ECKD3A101KBP	C 100PF, K, 1KV	1	
C565	EETHC2C821B	E 820UF, 160V	1	
C566	ECKD3D102KBP	C 1000PF, K, 2KV	1	
C567,68	ECJ3VC1H472J	C 4700PF, J, 50V	2	
C569	ECKD3A101KBP	C 100PF, K, 1KV	1	
C570	ECKD3A471KBP	C 470PF, K, 1KV	1	
C571	ECKD3A101KBP	C 100PF, K, 1KV	1	
C572	EEUFC1E222	E 2200UF, 25V	1	
C573,74	EETHC2D182L	E 1800UF, 200V	2	
C575	EEUEB1H220	E 22UF, 50V	1	
C576	EEUFC1E222	E 2200UF, 25V	1	
C577	ECA1EHG222	E 2200UF, 25V	1	
C578	ECQB1H332JF	P 3300PF, J, 50V	1	
C579	ECA1EHG221	E 220UF, 25V	1	
C581	EEUFC0J122	E 1200UF, 6.3V	1	
C583	ECJ2XB1H104K	C 0.1UF, K, 50V	1	
C584	ECJ2XB1H103K	C 0.01UF, K, 50V	1	
C585	EEUEB1E101	E 100UF, 25V	1	
C586	ECJ2XB1H103K	C 0.01UF, K, 50V	1	
C590	EEUFC1E222	E 2200UF, 25V	1	
C591	ECKD3A101KBP	C 100PF, K, 1KV	1	
C650	EEUEB1H101	E 100UF, 50V	1	
C901	ECQU2A105BN9	P 1UF, 250V	1	⚠
C902	ECQU2A224BN9	P 0.22UF, 250V	1	⚠
C903	ECQU2A105BN9	P 1UF, 250V	1	⚠
C910	ECKCNA221MBB	C 220PF, M	1	⚠
C911	ECKCNA221KB7	C 220PF, M,	1	⚠
C914	ECKCNA221MBB	C 220PF, M	1	⚠
C915	ECQU2A224BN9	P 0.22UF, 250V	1	⚠
C916,17	ECKDNA471KB7	C 470PF, Z,	2	⚠
C920	EETHC2W151J	C 150PF, 450V	1	
C921	EEUFC1H330	E 33UF, 50V	1	
C922	ECJ2VF1H104Z	C 0.1UF, Z, 50V	1	
C923	ECQF4103JZ	P 0.01UF, J,400V	1	
C924	ECKD3D471KBN	C 470PF, K, 2KV	1	
C926	ECJ2XC1H471J	C 470PF, J, 50V	1	
C927	ECJ2XC1H221J	C 220PF, J, 50V	1	
C928	ECJ2XC1H222J	C 2200PF, J, 50V	1	
C929	ECA1HHG100	E 10UF, 50V	1	
C930	ECJ2VF1H103Z	C 0.01UF, Z, 50V	1	
C931	ECJ2XC1H151J	C 150PF, J, 50V	1	
C970	ECKD3A331KBP	C 330PF, K, 1KV	1	
C971	EEUFC1V122	E 1200UF, 35V	1	
C972	ECKD3A331KBP	C 330PF, K, 1KV	1	
C973	EEUFC1E102	E 1000UF, 25V	1	
C974	ECJ2XB1H332K	C 3300PF, K, 50V	1	
C990	ECA1HHG100	E 10UF, 50V	1	
C1000	ECJ1XB1C104K	C 0.1UF, Z, 16V	1	
C1001	EEEHB0J470R	C 47PF, J, 6.3V	1	
C1002	ECJ1XB1C104K	C 0.1UF, Z, 16V	1	
C1003	EEEHB0G221P	C 220PF, J, 4V	1	
C1004	ECJ1XB1C104K	C 0.1UF, Z, 16V	1	
C1005	EEEHB1C470P	C 47PF, J, 16V	1	
C1006	ECJ1XB1C104K	C 0.1UF, Z, 16V	1	
C1007	EEEHB0G101R	C 100PF, J, 4V	1	
C1008	EEEHB1C470P	C 47PF, J, 16V	1	
C1009	ECJ1XB1C104K	C 0.1UF, Z, 16V	1	
C1010	ECJ1XF1C104Z	C 0.1UF, Z, 16V	1	
C1013	ECJ1XF1C104Z	C 0.1UF, Z, 16V	1	
C1014	EEEHB0J101P	C 100PF, J, 6.3V	1	
C1016,17	ECJ1XF1C104Z	C 0.1UF, Z, 16V	2	
C1018	EEEHB0J470R	C 47PF, J, 6.3V	1	
C1019	ECJ1XF1C104Z	C 0.1UF, Z, 16V	1	
C1020	EEEHB1H4R7R	C 4.7PF, J, 50V	1	
C1021	ECJ1XB1C104K	C 0.1UF, Z, 16V	1	
C1022	TCUY1C225KBM	C 2.2UF, 16V	1	F1K1C225A026
C1023	ECJ1XB1C104K	C 0.1UF, Z, 16V	1	
C1024	EEEHB0J101P	C 100PF, J, 6.3V	1	
C1025	ECJ2XC1H102J	C 1000PF, J, 50V	1	
C1027	ECJ1XF1C104Z	C 0.1UF, Z, 16V	1	
C1028	ECJ1XB1C104K	C 0.1UF, Z, 16V	1	

Ref. No.	Part No.	Part Name & Description	Pcs	Remarks
C1029,30	ECJ2XC1H330J	C 33PF, J, 50V	2	
C1031	ECJ2XB1H563K	C 0.056UF, K, 50V	1	
C1032	EEEHB0G101R	C 100PF, J, 4V	1	
C1033	ECJ1VF1H104Z	C 0.1UF, Z, 50V	1	
C1034	EEEHB0J101P	C 100PF, J, 6.3V	1	
C1035	ECJ2XB1H682K	C 6800PF, K, 50V	1	
C1036	EEEHB0G221P	C 220PF, J, 4V	1	
C1037	EEEHP1C100R	C 10PF, J, 16V	1	
C1038-40	ECJ1XF1C104Z	C 0.1UF, Z, 16V	3	
C1041	EEEHB1C470P	C 47PF, J, 16V	1	
C1042	ECJ1XF1C104Z	C 0.1UF, Z, 16V	1	
C1044	ECJ1XB1C104K	C 0.1UF, Z, 16V	1	
C1045	ECJ1XC1H151J	C 150PF, J, 50V	1	
C1046	EEEHB1C100R	C 10PF, J, 16V	1	
C1047	EEEHB0G221P	C 220PF, J, 4V	1	
C1048-50	ECJ1XF1C104Z	C 0.1UF, Z, 16V	3	
C1051	EEEHB0G101R	C 100PF, J, 4V	1	
C1052	ECJ1VB1H103K	C 0.01UF, K, 50V	1	
C1053	ECJ1XF1C104Z	C 0.1UF, Z, 16V	1	
C1054	EEEHB0G221P	C 220PF, J, 4V	1	
C1055	ECJ1XF1C104Z	C 0.1UF, Z, 16V	1	
C1056	ECJ1XC1H221J	C 220PF, J, 50V	1	
C1057,58	ECJ1XF1C104Z	C 0.1UF, Z, 16V	2	
C1059	ECJ1XC1H221J	C 220PF, J, 50V	1	
C1060	ECJ1XF1C104Z	C 0.1UF, Z, 16V	1	
C1062	ECJ1XF1C104Z	C 0.1UF, Z, 16V	1	
C1063	ECJ1XC1H220J	C 22PF, J, 50V	1	
C1064	ECJ1XF1C104Z	C 0.1UF, Z, 16V	1	
C1065	ECJ1XC1H220J	C 22PF, J, 50V	1	
C1066	ECJ1XF1C104Z	C 0.1UF, Z, 16V	1	
C1068-73	ECJ1XF1C104Z	C 0.1UF, Z, 16V	6	
C1075	ECJ2XC1H101J	C 100PF, J, 50V	1	
C1076	ECJ1XF1C104Z	C 0.1UF, Z, 16V	1	
C1077	EEEHB1C100R	C 10PF, J, 16V	1	
C1078	ECJ1XF1C104Z	C 0.1UF, Z, 16V	1	
C1081	EEEHB0G101R	C 100PF, J, 4V	1	
C1082	ECJ1XC1H221J	C 220PF, J, 50V	1	
C1083,84	ECJ1XF1C104Z	C 0.1UF, Z, 16V	2	
C1086-89	ECJ1XF1C104Z	C 0.1UF, Z, 16V	4	
C1090	ECJ3YB1A335K	C 0.033UF, K, 10V	1	
C1092	ECJ1XF1C104Z	C 0.1UF, Z, 16V	1	
C1093	ECJ1VB1H103K	C 0.01UF, K, 50V	1	
C1094	ECJ1XB1C104K	C 0.1UF, Z, 16V	1	
C1095	EEEHB1C470P	C 47PF, J, 16V	1	
C1152	ECJ1XB1C104K	C 0.1UF, Z, 16V	1	
C1201	ECJ2XB1H682K	C 6800PF, K, 50V	1	
C1202	ECJ1XC1H221J	C 220PF, J, 50V	1	
C1203	ECJ1XC1H101J	C 100PF, J, 50V	1	
C1204	ECJ1XC1H221J	C 220PF, J, 50V	1	
C1205	ECJ1XC1H101J	C 100PF, J, 50V	1	
C1206,07	ECJ1XC1H221J	C 220PF, J, 50V	2	
C1208	ECJ1XC1H101J	C 100PF, J, 50V	1	
C1209	ECJ1XC1H221J	C 220PF, J, 50V	1	
C1210	EEEHB0G221P	C 220PF, J, 4V	1	
C1211	EEEHB0G101R	C 100PF, J, 4V	1	
C1231	EEEHB0J101P	C 100PF, J, 6.3V	1	
C1234	ECJ1VF1H103Z	C 0.01UF, Z, 50V	1	
C1235,36	ECJ1XC1H271J	C 270PF, J, 50V	2	
C1238,39	ECJ1XC1H101J	C 100PF, J, 50V	2	
C1240	EEEHB1C101P	C 100PF, J, 16V	1	
C1241	EEEHB0J221UP	C 220PF, J, 6.3V	1	
C1242	ECJ1XB1C104K	C 0.1UF, Z, 16V	1	
C1254	ECJ1XC1H101J	C 100PF, J, 50V	1	
C1270	ECJ2VF1C104Z	C 0.1UF, Z, 16V	1	

Ref. No.	Part No.	Part Name & Description	Pcs	Remarks
C1271-73	ECJ2XB1H682K	C 6800PF, K, 50V	3	
C1274	EEEHB1C470P	C 47PF, J, 16V	1	
C1275-81	ECJ2XB1H682K	C 6800PF, K, 50V	7	
C1301,02	ECJ1XB1C104K	C 0.1UF, Z, 16V	2	
C1306	EEEHB1C470P	C 47PF, J, 16V	1	
C1308	EEEHB1C470P	C 47PF, J, 16V	1	
C1309-12	EEEHB0J470R	C 47PF, J, 6.3V	4	
C1315-17	EEEHB0G101R	C 100PF, J, 4V	3	
C1318,19	EEEHB1C470P	C 47PF, J, 16V	2	
C1320	EEEHB0G101R	C 100PF, J, 4V	1	
C1324	EEEHB1E330P	C 33PF, J, 25V	1	
C1325	ECJ1VF1H103Z	C 0.01UF, Z, 50V	1	
C1326,27	ECJ1XF1C104Z	C 0.1UF, Z, 16V	2	
C1329	EEEHB1H1R0R	C 1.0PF, J, 50V	1	
C1332,33	EEEHB0G101R	C 100PF, J, 4V	2	
C1334	EEEHB0G221P	C 220PF, J, 4V	1	
C1338	EEEHB0G101R	C 100PF, J, 4V	1	
C1339	EEEHB0G221P	C 220PF, J, 4V	1	
C1340	ECJ1VB1C105K	C 0.01UF, K, 16V	1	
C1341	EEEHB1C100R	C 10PF, J, 16V	1	
C1342-44	EEEHB0G101R	C 100PF, J, 4V	3	
C1345	EEEHB0G221P	C 220PF, J, 4V	1	
C1348	EEEHB0J470R	C 47PF, J, 6.3V	1	
C1350	EEEHB0G101R	C 100PF, J, 4V	1	
C1351	ECJ1VF1A105Z	C 1UF, Z, 10V	1	
C1352,53	EEEHB0G221P	C 220PF, J, 4V	2	
C1354	EEEHB0J470R	C 47PF, J, 6.3V	1	
C1355	EEEHB0G101R	C 100PF, J, 4V	1	
C1356	ECJ1VF1A105Z	C 1UF, Z, 10V	1	
C1357	EEEHB0G101R	C 100PF, J, 4V	1	
C1358,59	ECJ1VF1A105Z	C 1UF, Z, 10V	2	
C1360	EEEHB1C100R	C 10PF, J, 16V	1	
C1361	EEEHB0G101R	C 100PF, J, 4V	1	
C1362	ECJ1VF1A105Z	C 1UF, Z, 10V	1	
C1363	ECJ1VB1H103K	C 0.01UF, K, 50V	1	
C1365	ECJ1VB1C103K	C 0.01UF, K, 16V	1	
C1366,67	ECJ1VF1A105Z	C 1UF, Z, 10V	2	
C1368	ECJ1VB1H103K	C 0.01UF, K, 50V	1	
C1369	ECJ1XB0J105K	C 1UF, K, 16V	1	
C1370	ECJ1VF1A105Z	C 1UF, Z, 10V	1	
C1371	ECJ1XC1H150J	C 15PF, J, 50V	1	
C1375	ECJ1XF1C104Z	C 0.1UF, Z, 16V	1	
C1378,79	ECJ1XC1H680J	C 68PF, J, 50V	2	
C1382	EEEHB0J470R	C 47PF, J, 6.3V	1	
C1383	ECJ1XC1H150J	C 15PF, J, 50V	1	
C1386	ECJ1XB1H102K	C 1000UF, Z, 50V	1	
C1389,90	ECJ1XC1H470J	C 47PF, J, 50V	2	
C1393	ECJ1XC1H220J	C 22PF, J, 50V	1	
C1395	ECJ1XC1H220J	C 22PF, J, 50V	1	
C1398	ECJ1XF1C104Z	C 0.1UF, Z, 16V	1	
C1402,03	ECJ1VF1A105Z	C 1UF, Z, 10V	2	
C1404,05	ECJ1XB1C104K	C 0.1UF, Z, 16V	2	
C1408,09	ECJ1VF1A105Z	C 1UF, Z, 10V	2	
C1410-13	ECJ1VB0J225K	C 2.2UF, K, 6.3V	4	
C1416	ECJ1VB1H103K	C 0.01UF, K, 50V	1	
C1417	ECJ3YB0J335K	C 33UF, J, 25V	1	
C1418	ECJ1XC1H680J	C 68PF, J, 50V	1	
C1419	ECJ1XC1H100D	C 10PF, D, 50V	1	

Ref. No.	Part No.	Part Name & Description	Pcs	Remarks
C1420	ECJ1XC1H050D	C 5PF, D, 50V	1	
C1421,22	ECJ1XC1H180J	C 18PF, J, 50V	2	
C1424	ECJ1XC1H330J	C 33PF, J, 50V	1	
C1425	ECJ1XC1H101J	C 100PF, J, 50V	1	
C1426	ECJ1VB1H103K	C 0.01UF, K, 50V	1	
C1427	ECJ1XC1H101J	C 100PF, J, 50V	1	
C1428	ECJ1VF1A105Z	C 1UF, Z, 10V	1	
C1429,30	ECJ1XC1H180J	C 18PF, J, 50V	2	
C1431,32	ECJ1XC1H101J	C 100PF, J, 50V	2	
C1433,34	ECJ1VF1A105Z	C 1UF, Z, 10V	2	
C1437	ECJ1XB1C104K	C 0.1UF, Z, 16V	1	
C1438-40	ECJ1VF1A105Z	C 1UF, Z, 10V	3	
C1441	ECJ1XB1C104K	C 0.1UF, Z, 16V	1	
C1442	ECJ1VF1A105Z	C 1UF, Z, 10V	1	
C1444-49	ECJ1VF1A105Z	C 1UF, Z, 10V	6	
C1452,53	ECJ1VF1A105Z	C 1UF, Z, 10V	2	
C1454	ECJ1VB1H103K	C 0.01UF, K, 50V	1	
C1457	ECJ1VF1H103Z	C 0.01UF, Z, 50V	1	
C1464	EEEHB1C470P	C 47PF, J, 16V	1	
C1466	ECJ1XB1C104K	C 0.1UF, Z, 16V	1	
C1467	ECJ1XC1H820J	C 82PF, J, 50V	1	
C1468	ECJ1XB1C104K	C 0.1UF, Z, 16V	1	
C1471	ECJ1XB1C104K	C 0.1UF, Z, 16V	1	
C1476	ECJ1XB1C104K	C 0.1UF, Z, 16V	1	
C1479	ECJ1VF1A105Z	C 1UF, Z, 10V	1	
C1482,83	ECJ1VF1A105Z	C 1UF, Z, 10V	2	
C1489	ECJ1VF1A105Z	C 1UF, Z, 10V	1	
C1496	ECJ1VF1A105Z	C 1UF, Z, 10V	1	
C1501	ECJ1XC1H150J	C 15PF, J, 50V	1	
C1502	ECJ1VF1A105Z	C 1UF, Z, 10V	1	
C1505	ECJ1XC1H180J	C 18PF, J, 50V	1	
C1510	ECJ1XC1H470J	C 47PF, J, 50V	1	
C1512	ECJ1VF1A105Z	C 1UF, Z, 10V	1	
C1514-23	ECJ1VF1A105Z	C 1UF, Z, 10V	10	
C1525-27	ECJ1VF1A105Z	C 1UF, Z, 10V	3	
C1528,29	ECJ1XB1C104K	C 0.1UF, Z, 16V	2	
C1530	ECJ1VF1A105Z	C 1UF, Z, 10V	1	
C1531	ECJ1XB1C104K	C 0.1UF, Z, 16V	1	
C1533,34	ECJ1VF1A105Z	C 1UF, Z, 10V	2	
C1535	ECJ1XC1H470J	C 47PF, J, 50V	1	
C1536	ECJ1XB1C104K	C 0.1UF, Z, 16V	1	
C1537,38	ECJ1VF1A105Z	C 1UF, Z, 10V	2	
C1539,40	ECJ1XB1C104K	C 0.1UF, Z, 16V	2	
C1541	ECJ1VF1A105Z	C 1UF, Z, 10V	1	
C1542	ECJ1XB1C104K	C 0.1UF, Z, 16V	1	
C1543	ECJ1VF1A105Z	C 1UF, Z, 10V	1	
C1545	ECJ1XB1C104K	C 0.1UF, Z, 16V	1	
C1546,47	ECJ1VF1A105Z	C 1UF, Z, 10V	2	
C1549-53	ECJ1VF1A105Z	C 1UF, Z, 10V	5	
C1554	ECJ1XB1C104K	C 0.1UF, Z, 16V	1	
C1555	ECJ1VF1A105Z	C 1UF, Z, 10V	1	
C1557	ECJ1VF1A105Z	C 1UF, Z, 10V	1	
C1559	ECJ1VF1A105Z	C 1UF, Z, 10V	1	
C1561-63	ECJ1VF1A105Z	C 1UF, Z, 10V	3	
C1565-70	ECJ1VF1A105Z	C 1UF, Z, 10V	6	
C1572-74	ECJ1VF1A105Z	C 1UF, Z, 10V	3	
C1581	TCUY0J335MBM	C 3.3UF, 6.3V	1	F1K0J335A003
C1583	ECJ2YB0J106K	C 10UF, Z, 5V	1	

Ref. No.	Part No.	Part Name & Description	Pcs	Remarks
C1584	EEEHB0G221P	C 220PF, J, 4V	1	
C1587	ECJ1VF1A105Z	C 1UF, Z, 10V	1	
C1589	ECJ1VF1A105Z	C 1UF, Z, 10V	1	
C1590,91	ECJ1XC1H680J	C 68PF, J, 50V	2	
C1592	ECJ1VB1C103K	C 0.01UF, K, 16V	1	
C1593,94	ECJ1XC1H330J	C 33PF, J, 50V	2	
C1595	ECJ1VF1A105Z	C 1UF, Z, 10V	1	
C1597	ECJ1VB1C103K	C 0.01UF, K, 16V	1	
C1598,99	ECJ1VB1H103K	C 0.01UF, K, 50V	2	
C1601	ECJ1VF1A105Z	C 1UF, Z, 10V	1	
C1603	ECJ1VF1A105Z	C 1UF, Z, 10V	1	
C1605	EEEHB1C470P	C 47PF, J, 16V	1	
C1609	ECJ1VF1A105Z	C 1UF, Z, 10V	1	
C1610	ECJ1VB1C103K	C 0.01UF, K, 16V	1	
C1613	ECJ1VF1A105Z	C 1UF, Z, 10V	1	
C1614	ECJ1XC1H680J	C 68PF, J, 50V	1	
C1615	ECJ1XB1C104K	C 0.1UF, Z, 16V	1	
C1616	ECJ1VF1A105Z	C 1UF, Z, 10V	1	
C1618-23	ECJ1VF1A105Z	C 1UF, Z, 10V	6	
C1625	ECJ1XC1H330J	C 33PF, J, 50V	1	
C1626	EEEHB1H1R0R	C 1.0PF, J, 50V	1	
C1628-30	ECJ1VF1A105Z	C 1UF, Z, 10V	3	
C1631	ECJ1VF1H103Z	C 0.01UF, Z, 50V	1	
C1632,33	ECJ1VF1A105Z	C 1UF, Z, 10V	2	
C1634,35	ECJ1VF1H103Z	C 0.01UF, Z, 50V	2	
C1636-40	ECJ1VF1A105Z	C 1UF, Z, 10V	5	
C1641	ECJ1VB1C103K	C 0.01UF, K, 16V	1	
C1642-51	ECJ1VF1A105Z	C 1UF, Z, 10V	10	
C1652	ECJ1VB1H103K	C 0.01UF, K, 50V	1	
C1653	ECJ1VF1A105Z	C 1UF, Z, 10V	1	
C1654	ECJ1XB1C104K	C 0.1UF, Z, 16V	1	
C1655	ECJ1VB1H103K	C 0.01UF, K, 50V	1	
C1656	ECJ1VF1A105Z	C 1UF, Z, 10V	1	
C1657	ECJ1VB1H103K	C 0.01UF, K, 50V	1	
C1658	ECJ1VF1A105Z	C 1UF, Z, 10V	1	
C1659	EEEHB1H1R0R	C 1.0PF, J, 50V	1	
C1660-74	ECJ1VF1A105Z	C 1UF, Z, 10V	15	
C1675	ECJ1VB1H103K	C 0.01UF, K, 50V	1	
C1677-79	ECJ1VF1A105Z	C 1UF, Z, 10V	3	
C1680	ECJ1VB1C103K	C 0.01UF, K, 16V	1	
C1681	ECJ1VF1A105Z	C 1UF, Z, 10V	1	
C1682	EEEHB0G101R	C 100PF, J, 4V	1	
C1691-00	ECJ1VF1H103Z	C 0.01UF, Z, 50V	10	
C1705-11	ECJ1VF1H103Z	C 0.01UF, Z, 50V	7	
C1712	ECJ1VB1H103K	C 0.01UF, K, 50V	1	
C1713	ECJ1VF1H103Z	C 0.01UF, Z, 50V	1	
C1717-19	ECJ1VF1H103Z	C 0.01UF, Z, 50V	3	
C1725	ECJ1XB0J105K	C 1UF, K, 16V	1	
C1727	ECJ1XB0J105K	C 1UF, K, 16V	1	
C1728	ECJ1XB1C104K	C 0.1UF, Z, 16V	1	
C1729	EEEHP1C100R	C 10PF, J, 16V	1	
C1730	ECJ1XF1C104Z	C 0.1UF, Z, 16V	1	
C1731,32	ECJ1XB0J105K	C 1UF, K, 16V	2	
C1733	ECJ1XF1C104Z	C 0.1UF, Z, 16V	1	
C1734	ECJ1VF1A105Z	C 1UF, Z, 10V	1	
C1735	EEEHP1C100R	C 10PF, J, 16V	1	
C1736	ECJ1XB1C104K	C 0.1UF, Z, 16V	1	
C1737	EEEHP1C100R	C 10PF, J, 16V	1	
C1738	ECJ1XB0J105K	C 1UF, K, 16V	1	
C1739	EEEHP1C100R	C 10PF, J, 16V	1	
C1741	TCUY0J685MBM	C 6.8UF, 6.3V	1	F1K0J685A003

Ref. No.	Part No.	Part Name & Description	Pcs	Remarks
C1742	ECJ1VF1H103Z	C 0.01UF, Z, 50V	1	
C1743	EEEHP1C100R	C 10PF, J, 16V	1	
C1744	EEEHB1C470P	C 47PF, J, 16V	1	
C1745	ECJ1XB0J105K	C 1UF, K, 16V	1	
C1747	ECJ1XB1C104K	C 0.1UF, Z, 16V	1	
C1750	ECJ1VF1A105Z	C 1UF, Z, 10V	1	
C1751	ECJ1XC1H101J	C 100PF, J, 50V	1	
C1753	ECJ1XC1H220J	C 22PF, J, 50V	1	
C1755	ECJ1XC1H390J	C 39PF, J, 50V	1	
C1757	ECJ1XC1H150J	C 15PF, J, 50V	1	
C1758	ECJ1VC1H080C	C 8PF, C, 50V	1	
C1760	ECJ1VF1A105Z	C 1UF, Z, 10V	1	
C1761	ECJ1XC1H470J	C 47PF, J, 50V	1	
C1762,63	ECJ1XB0J105K	C 1UF, K, 16V	2	
C1765	ECJ1XC1H330J	C 33PF, J, 50V	1	
C1766	ECJ1XC1H101J	C 100PF, J, 50V	1	
C1767	ECJ1XC1H330J	C 33PF, J, 50V	1	
C1771	ECJ1XF1C104Z	C 0.1UF, Z, 16V	1	
C1772	ECJ1XC1H390J	C 39PF, J, 50V	1	
C1773	ECJ1XC1H150J	C 15PF, J, 50V	1	
C1774	TCUY0J685MBM	C 6.8UF, 6.3V	1	F1K0J685A003
C1776,77	ECJ1XB0J105K	C 1UF, K, 16V	2	
C1780	ECJ1VF1A105Z	C 1UF, Z, 10V	1	
C1781	EEEHB1C470P	C 47PF, J, 16V	1	
C1783-85	ECJ1XB1C104K	C 0.1UF, Z, 16V	3	
C1807-14	ECJ1VF1H103Z	C 0.01UF, Z, 50V	8	
C1816	ECJ1XB1C104K	C 0.1UF, Z, 16V	1	
C1817-20	ECJ1VF1H103Z	C 0.01UF, Z, 50V	4	
C1827,28	ECJ1XB1C104K	C 0.1UF, Z, 16V	2	
C1850	ECJ1VB1C103K	C 0.01UF, K, 16V	1	
C1854	EEEHB1C470P	C 47PF, J, 16V	1	
C1855	ECJ1VF1H104Z	C 0.1UF, Z, 50V	1	
C1863	ECJ1XB1C104K	C 0.1UF, Z, 16V	1	
C1865,66	ECJ1XF1C104Z	C 0.1UF, Z, 16V	2	
C1867,68	EEEHB0G101R	C 100PF, J, 4V	2	
C1869	ECJ1VF1H104Z	C 0.1UF, Z, 50V	1	
C1870	ECJ1VF1H103Z	C 0.01UF, Z, 50V	1	
C1872,73	EEEHB0G101R	C 100PF, J, 4V	2	
C1874,75	EEFCD0G560R	56UF,	2	
C1876	ECJ1XC1H471J	C 470PF, J, 50V	1	
C1877	ECJ1XF1C104Z	C 0.1UF, Z, 16V	1	
C1878	ECJ3XB0J106M	C 10UF, M,6.3V	1	
C1881	ECJ1XF1C104Z	C 0.1UF, Z, 16V	1	
C1883	ECJ1XF1C104Z	C 0.1UF, Z, 16V	1	
C1884	ECJ2VF1C104Z	C 0.1UF, Z, 16V	1	
C1885	ECJ1VF1A105Z	C 1UF, Z, 10V	1	
C1886	TCUY1C225KBM	C 2.2UF, 16V	1	F1K1C225A026
C1887	ECJ3XB0J106M	C 10UF, M,6.3V	1	
C1888	ECJ3YB1A475K	C 0.047UF, K, 10V	1	
C1889	ECJ3XB0J106M	C 10UF, M,6.3V	1	
C1890	ECJ2XB1H103K	C 0.01UF, K, 50V	1	
C1891	ECJ1VF1A105Z	C 1UF, Z, 10V	1	
C1892	ECJ3VB1C474K	C 0.47UF, K, 16V	1	
C1893,94	ECJ2XB1H103K	C 0.01UF, K, 50V	2	
C1895-97	ECJ1VF1H104Z	C 0.1UF, Z, 50V	3	
C1898	EEEHB1C470P	C 47PF, J, 16V	1	
C1899,00	ECJ1VF1H104Z	C 0.1UF, Z, 50V	2	
C1927	ECJ2XC1H102J	C 1000PF, J, 50V	1	
C1928	ECJ2XC1H101J	C 100PF, J, 50V	1	
C1929	ECJ2VF1H103Z	C 0.01UF, Z, 50V	1	
C1930,31	ECJ3XB0J106M	C 10UF, M,6.3V	2	
C1932	ECJ2XC1H102J	C 1000PF, J, 50V	1	

Ref. No.	Part No.	Part Name & Description	Pcs	Remarks
C1933	ECJ1VF1A105Z	C 1UF, Z, 10V	1	
C1934	EEEHB1C470P	C 47PF, J, 16V	1	
C1935	ECJ1VF1A105Z	C 1UF, Z, 10V	1	
C1936	ECJ2XB1H682K	C 6800PF, K, 50V	1	
C1937-39	EEEHB1A471P	C 470PF, J, 10V	3	
C1951-53	ECJ3XB0J106M	C 10UF, M,6.3V	3	
C2001	ECJ2XB1H153K	C 0.015UF, K, 50V	1	
C2002	ECJ2VF1C104Z	C 0.1UF, Z, 16V	1	
C2003,04	ECJ2XB1H102K	C 1000PF, K, 50V	2	
C2006	ECJ2XB1H103K	C 0.01UF, K, 50V	1	
C2007,08	ECEA1HN100U	E 10UF, 50V	2	
C2009	ECJ2XB1H103K	C 0.01UF, K, 50V	1	
C2010	ECJ2VF1C104Z	C 0.1UF, Z, 16V	1	
C2011	ECA1EM471	E 470UF, 25V	1	
C2012	ECJ2XB1H103K	C 0.01UF, K, 50V	1	
C2013	ECJ2XF1H102Z	C 1000PF, Z, 50V	1	
C2016	ECA1HM100	E 10UF, 50V	1	
C2017	ECJ2VF1C104Z	C 0.1UF, Z, 16V	1	
C2018	ECA1HM100	E 10UF, 50V	1	
C2019	ECJ2XB1H103K	C 0.01UF, K, 50V	1	
C2021	ECA1HM3R3	E 3.3UF, 50V	1	
C2022,23	ECJ2VF1C104Z	C 0.1UF, Z, 16V	2	
C2024	ECA1HM100	E 10UF, 50V	1	
C2026,27	ECJ2VF1C104Z	C 0.1UF, Z, 16V	2	
C2028	ECJ2FF1C475Z	C 0.047UF, Z, 16V	1	
C2029,30	ECJ2XC1H030C	C 3PF, C, 50V	2	
C2031,32	ECA1CM101	E 100UF, 16V	2	
C2033	ECJ2XC1H470J	C 47PF, J, 50V	1	
C2034	ECA1CM101	E 100UF, 16V	1	
C2035	ECJ2VF1C104Z	C 0.1UF, Z, 16V	1	
C2036	ECJ2XC1H470J	C 47PF, J, 50V	1	
C2037	ECJ2XC1H560J	C 56PF, J, 50V	1	
C2038	ECJ2XC1H100C	C 10PF, C, 50V	1	
C2039	ECJ2XC1H220J	C 22UF, J, 50V	1	
C2043	ECJ1XB1C104K	C 0.1UF, Z, 16V	1	TH-37PA30A
C2044	ECJ2VF1C104Z	C 0.1UF, Z, 16V	1	TH-37PA30A
C2045	ECJ2VB1C104K	C 0.1UF, K, 16V	1	TH-37PA30A
C2050	ECJ2VF1C104Z	C 0.1UF, Z, 16V	1	
C2052	ECJ2XB1H682K	C 6800PF, K, 50V	1	
C2058,59	ECJ1XC1H221J	C 220PF, J, 50V	2	
C2060-63	ECJ2FF1C475Z	C 0.047UF, Z, 16V	4	
C2201,02	ECA1HM100	E 10UF, 50V	2	
C2203	ECJ2XB1H682K	C 6800PF, K, 50V	1	
C2204	ECA1CEN100	E 10UF, 16V	1	
C2205	ECA1CM101	E 100UF, 16V	1	
C2207	ECJ2YB1E224K	C 0.22UF, K, 25V	1	
C2212,13	TCUY1C225KBM	C 2.2UF, 16V	2	F1K1C225A026
C2214,15	ECJ2XB1H102K	C 1000PF, K, 50V	2	
C2222	ECJ2VF1H104Z	C 0.1UF, Z, 50V	1	
C2225,26	ECJ2VF1H104Z	C 0.1UF, Z, 50V	2	
C2228	ECJ2XB1A105K	C 1UF, K, 10V	1	
C2238,39	ECJ2XB1H682K	C 6800PF, K, 50V	2	
C2262	ECJ2XB1A105K	C 1UF, K, 10V	1	
C2270	ECA1CM101	E 100UF, 16V	1	
C2271	ECJ2VF1C104Z	C 0.1UF, Z, 16V	1	
C2272,73	ECJ2XB1A105K	C 1UF, K, 10V	2	
C2274,75	ECJ1XC1H470J	C 47PF, J, 50V	2	
C2276	ECJ1VF1H103Z	C 0.01UF, Z, 50V	1	
C2286	ECJ1VF1H103Z	C 0.01UF, Z, 50V	1	

Ref. No.	Part No.	Part Name & Description	Pcs	Remarks
C2287,88	ECJ1XC1H470J	C 47PF, J, 50V	2	
C2289	ECA1CM101	E 100UF, 16V	1	
C2290	ECJ2VF1C104Z	C 0.1UF, Z, 16V	1	
C2305,06	ECA1VHG470	E 47UF, 35V	2	
C2307,08	ECA1HHG220	E 22UF, 50V	2	
C2309,10	ECA1HEN2R2	E 2.2UF, 50V	2	
C2311,12	ECJ2XB1H682K	C 6800PF, K, 50V	2	
C2313,14	ECA1HHG2R2	E 2.2UF, 50V	2	
C2317,18	ECA1VHG221	E 220UF, 35V	2	
C2321,22	ECQV1H225JM	P 2.2UF, J, 50V	2	
C2323,24	ECJ2XC1H102J	C 1000PF, J, 50V	2	
C2325,26	ECA1EHG471	E 470UF, 25V	2	
C2327-30	ECQV1H104JM	P 0.1UF, J, 50V	4	
C2331,32	ERJ6GEYJ104	M 100KOHM,J,1/10W	2	
C2333,34	ECA1EHG471	E 470UF, 25V	2	
C2339	ECA1HHG100	E 10UF, 50V	1	
C2342	ECA1HHG100	E 10UF, 50V	1	
C2345,46	ECA1VHG470	E 47UF, 35V	2	
C2347,48	ECA1HHG220	E 22UF, 50V	2	
C2349	ECA1HEN2R2	E 2.2UF, 50V	1	
C2355	ECA1HEN2R2	E 2.2UF, 50V	1	
C2381	ECA1HHG100	E 10UF, 50V	1	
C2382	ECA1CHG101	E 100UF, 16V	1	
C2383,84	ECJ2XB1H682K	C 6800PF, K, 50V	2	
C2385,86	ECA1HHG2R2	E 2.2UF, 50V	2	
C2387,88	ECA1VHG221	E 220UF, 35V	2	
C2389,90	ECA1EHG471	E 470UF, 25V	2	
C2391,92	ECQV1H225JM	P 2.2UF, J, 50V	2	
C2393,94	ECA1EHG471	E 470UF, 25V	2	
C2395,96	ECJ2XC1H102J	C 1000PF, J, 50V	2	
C2397-00	ECQV1H104JM	P 0.1UF, J, 50V	4	
C2401,02	ECJ1VB1H182K	C 1800PF, K, 50V	2	
C2403,04	ECA1HEN4R7	E 4.7UF, 50V	2	
C2407	ECJ1VB1H562K	C 5600PF, K, 50V	1	
C2408	ECA1HHG4R7	E 4.7UF, 50V	1	
C2412	ECJ1VB1H103K	C 0.01UF, K, 50V	1	
C2413	ECA1HHG470	E 47UF, 50V	1	
C2414	EEEHB1C470P	C 47PF, J, 16V	1	
C2415	ECA1HEN4R7	E 4.7UF, 50V	1	
C2416	ECJ1XC1H271J	C 270PF, J, 50V	1	
C2417	ECJ1VB1E333K	C 0.33UF, K, 25V	1	
C2418	ECJ1XC1H271J	C 270PF, J, 50V	1	
C2419	ECJ1VB1E333K	C 0.33UF, K, 25V	1	
C2420	ECJ1XC1H271J	C 270PF, J, 50V	1	
C2421	ECJ1VB1E333K	C 0.33UF, K, 25V	1	
C2422	ECJ1XC1H271J	C 270PF, J, 50V	1	
C2423	ECJ1VB1E333K	C 0.33UF, K, 25V	1	
C2424-27	ECJ1VB1H562K	C 5600PF, K, 50V	4	
C2428	ECA1CHG101	E 100UF, 16V	1	
C2429	ECJ1VB1H103K	C 0.01UF, K, 50V	1	
C2430	ECA1CHG101	E 100UF, 16V	1	
C2431	ECJ1VB1H103K	C 0.01UF, K, 50V	1	

Ref. No.	Part No.	Part Name & Description	Pcs	Remarks
C2432	ECJ1VC1H271K	C 270PF, J, 50V	1	
C2436	ECJ1VC1H271K	C 270PF, J, 50V	1	
C2440	ECJ1VB1H103K	C 0.01UF, K, 50V	1	
C2441,42	ECJ1VB1H123K	C 0.12UF, K, 50V	2	
C2443	ECA1CHG101	E 100UF, 16V	1	
C2444,45	ECJ1VB1H123K	C 0.12UF, K, 50V	2	
C2630	ECJ1VB1H103K	C 0.01UF, K, 50V	1	
C2631	ECJ1XF1H102Z	C 1000PF, Z, 50V	1	
C2636	ECJ2FF1C475Z	C 0.047UF, Z, 16V	1	
C2637,38	ECJ1VF1A105Z	C 1UF, Z, 10V	2	
C2639	ECJ2FF1C475Z	C 0.047UF, Z, 16V	1	
C2640,41	ECJ1VF1A105Z	C 1UF, Z, 10V	2	
C2655	ECJ1VB1H103K	C 0.01UF, K, 50V	1	
C2656	ECJ1XF1H102Z	C 1000PF, Z, 50V	1	
C2657	ECJ1VB1H103K	C 0.01UF, K, 50V	1	
C2658	ECJ1XF1H102Z	C 1000PF, Z, 50V	1	
C2662,63	ECJ1VB1H103K	C 0.01UF, K, 50V	2	
C2664	ECJ1XF1H102Z	C 1000PF, Z, 50V	1	
C2665,66	ECJ1XC1H150J	C 15PF, J, 50V	2	
C2667	ECJ2XB1A105K	C 1UF, K, 10V	1	
C2668	ECJ1XB1C104K	C 0.1UF, Z, 16V	1	
C2669	ECJ1XF1H102Z	C 1000PF, Z, 50V	1	
C2670	ECJ1XB1C104K	C 0.1UF, Z, 16V	1	
C2671	ECJ1VB1H103K	C 0.01UF, K, 50V	1	
C2672	ECJ1VF1A105Z	C 1UF, Z, 10V	1	
C2673	ECA1VM470	E 47UF, 35V	1	
C2675,76	ECJ2FF1C475Z	C 0.047UF, Z, 16V	2	
C2677	ECJ2XB1A105K	C 1UF, K, 10V	1	
C2680	ECJ1XB1C104K	C 0.1UF, Z, 16V	1	
C3108,09	ECJ2VF1C104Z	C 0.1UF, Z, 16V	2	
C3112	ECJ2XB1H682K	C 6800PF, K, 50V	1	
C3113,14	ECJ2XC1H561J	C 560PF, J, 50V	2	
C3115	ECA1VM470	E 47UF, 35V	1	
C3116	ECA1HM100	E 10UF, 50V	1	
C3117-20	ECJ2XC1H561J	C 560PF, J, 50V	4	
C3121	ECA1EM471	E 470UF, 25V	1	
C3122,23	ECJ2XC1H561J	C 560PF, J, 50V	2	
C3126	ECJ2VF1C104Z	C 0.1UF, Z, 16V	1	
C3132	ECA1HM100	E 10UF, 50V	1	
C3139	ECJ2VF1C104Z	C 0.1UF, Z, 16V	1	
C3140	ECA1EM471	E 470UF, 25V	1	
C3170	ECA1VM470	E 47UF, 35V	1	
C3171,72	ECA1HM100	E 10UF, 50V	2	
C3174-76	ECJ2VF1C104Z	C 0.1UF, Z, 16V	3	
C3177	ECA1HM100	E 10UF, 50V	1	
C3181,82	ECJ1XC1H470J	C 47PF, J, 50V	2	
C3194	ECJ2VF1C104Z	C 0.1UF, Z, 16V	1	
C3195	ECJ2XB1H562K	C 5600PF, K, 50V	1	
C3196	ECJ2VF1C104Z	C 0.1UF, Z, 16V	1	
C3197	ECJ2XB1H562K	C 5600PF, K, 50V	1	
C3198,99	ECJ2VF1C104Z	C 0.1UF, Z, 16V	2	
C3200	ECJ2VF1H104Z	C 0.1UF, Z, 50V	1	
C3201,02	ECJ2VF1C104Z	C 0.1UF, Z, 16V	2	
C3205	TCUY0J335MBM	C 3.3UF, 6.3V	1	TH-37/42PA30H/M/R
C3206	TCUY0J335MBM	C 3.3UF, 6.3V	1	
C3207	ECA1CM101	E 100UF, 16V	1	
C3209	ECJ2XB1H682K	C 6800PF, K, 50V	1	
C3214	TCUY0J335MBM	C 3.3UF, 6.3V	1	F1K0J335A003

Ref. No.	Part No.	Part Name & Description	Pcs	Remarks
C3215	ECJ2XB1A105K	C 1UF, K, 10V	1	
C3216	ECJ2VF1C104Z	C 0.1UF, Z, 16V	1	
C3217	TCUY0J335MBM	C 3.3UF, 6.3V	1	F1K0J335A003
C3218	ECA1CM101	E 100UF, 16V	1	
C3219,20	ECJ2XB1A105K	C 1UF, K, 10V	2	
C3221	TCUY0J335MBM	C 3.3UF, 6.3V	1	F1K0J335A003
C3222	ECJ2XB1A105K	C 1UF, K, 10V	1	
C3223	TCUY0J335MBM	C 3.3UF, 6.3V	1	F1K0J335A003
C3224,25	ECJ2XB1A105K	C 1UF, K, 10V	2	
C3226	TCUY0J335MBM	C 3.3UF, 6.3V	1	F1K0J335A003
C3227	ECJ2XB1A105K	C 1UF, K, 10V	1	
C3228,29	TCUY0J335MBM	C 3.3UF, 6.3V	2	F1K0J335A003
C3230,31	ECJ2XB1H682K	C 6800PF, K, 50V	2	
C3232,33	ECJ2XB1A105K	C 1UF, K, 10V	2	
C3234	ECJ2XB1H682K	C 6800PF, K, 50V	1	
C3235	ECJ2FF1C475Z	C 0.047UF, Z, 16V	1	
C3237-40	TCUY0J335MBM	C 3.3UF, 6.3V	4	F1K0J335A003
C3241	ECJ2XB1A105K	C 1UF, K, 10V	1	
C3279,80	ECJ2VF1C104Z	C 0.1UF, Z, 16V	2	
C3282	ECJ2VF1H104Z	C 0.1UF, Z, 50V	1	
C3285	ECJ2VF1C104Z	C 0.1UF, Z, 16V	1	TH-37/42PA30H/M/R
C3287	ECJ2VF1H104Z	C 0.1UF, Z, 50V	1	TH-37/42PA30H/M/R
C3290	ECJ2VF1C104Z	C 0.1UF, Z, 16V	1	
C3291	ECJ2VF1C104Z	C 0.1UF, Z, 16V	1	TH-37PA30A
C3713,14	ECJ2XB1H103K	C 0.01UF, K, 50V	2	
C3718,19	ECJ2XC1H561J	C 560PF, J, 50V	2	
C6002,03	ECJ1XF1C104Z	C 0.1UF, Z, 16V	2	
C6005,06	ECJ3XB0J106M	C 10UF, M,6.3V	2	
C6007-10	ECJ1XF1C104Z	C 0.1UF, Z, 16V	4	
C6013	EEEHB1A101P	C 100PF, J, 10V	1	
C6014	ECJ1XF1C104Z	C 0.1UF, Z, 16V	1	
C6016	ECJ2XB1H682K	C 6800PF, K, 50V	1	
C6017	ECJ1XF1C104Z	C 0.1UF, Z, 16V	1	
C6018	EEFCD0J470R	47UF	1	
C6019,20	ECJ1XF1C104Z	C 0.1UF, Z, 16V	2	
C6021-24	ECJ1VF1H103Z	C 0.01UF, Z, 50V	4	
C6026,27	ECJ1VF1H103Z	C 0.01UF, Z, 50V	2	
C6028	ECJ1XF1C104Z	C 0.1UF, Z, 16V	1	
C6030,31	ECJ1XF1C104Z	C 0.1UF, Z, 16V	2	
C6032	ECJ3XB0J106M	C 10UF, M,6.3V	1	
C6034,35	ECJ1XF1C104Z	C 0.1UF, Z, 16V	2	
C6039	ECJ1XF1C104Z	C 0.1UF, Z, 16V	1	
C6040	EEEHB0J221UP	C 220PF, J, 6.3V	1	
C6041,42	ECJ1XB1C104K	C 0.1UF, Z, 16V	2	
C6043	EEEHB0G101R	C 100PF, J, 4V	1	
C6044	ECJ1XB1C104K	C 0.1UF, Z, 16V	1	
C6046-55	ECJ1XF1C104Z	C 0.1UF, Z, 16V	10	
C6056	ECJ1VF1H103Z	C 0.01UF, Z, 50V	1	
C6057	ECJ1VF1H104Z	C 0.1UF, Z, 50V	1	
C6058-70	ECJ1XF1C104Z	C 0.1UF, Z, 16V	13	
C6071	ECJ1VF1C105Z	C 1UF, Z, 16V	1	
C6072	ECJ1XF1C104Z	C 0.1UF, Z, 16V	1	
C6073	ECJ3YB1A106M	C 10UF, M,6.3V	1	
C6074	ECJ1XF1C104Z	C 0.1UF, Z, 16V	1	

Ref. No.	Part No.	Part Name & Description	Pcs	Remarks
C6075	ECJ1XC1H470J	C 47PF, J, 50V	1	
C6077	ECJ1XF1C104Z	C 0.1UF, Z, 16V	1	
C6078	ECJ1VF1C105Z	C 1UF, Z, 16V	1	
C6080,81	ECJ1XF1C104Z	C 0.1UF, Z, 16V	2	
C6082	EEEHB0G101R	C 100PF, J, 4V	1	
C6083,84	ECJ1XF1C104Z	C 0.1UF, Z, 16V	2	
C6086	ECJ1VB1C103K	C 0.01UF, K, 16V	1	
C6087	ECJ1XF1C104Z	C 0.1UF, Z, 16V	1	
C6088	ECJ1XC1H470J	C 47PF, J, 50V	1	
C6089	EEEHB1C100R	C 10PF, J, 16V	1	
C6090	ECJ1VC1H270J	C 27PF, J, 50V	1	
C6091	ECJ1XF1C104Z	C 0.1UF, Z, 16V	1	
C6092	ECJ1XC1H151J	C 150PF, J, 50V	1	
C6093-96	ECJ1XF1C104Z	C 0.1UF, Z, 16V	4	
C6097	EEEHB0G101R	C 100PF, J, 4V	1	
C6100	ECJ1VF1C105Z	C 1UF, Z, 16V	1	
C6101	EEEHB0G101R	C 100PF, J, 4V	1	
C6102	ECJ1VB1C103K	C 0.01UF, K, 16V	1	
C6103	ECJ1XF1C104Z	C 0.1UF, Z, 16V	1	
C6104	EEEHB0G221P	C 220PF, J, 4V	1	
C6105	ECJ1XF1C104Z	C 0.1UF, Z, 16V	1	
C6106,07	EEEHB0J221UP	C 220PF, J, 6.3V	2	
C6110	EEEHB1A101P	C 100PF, J, 10V	1	
C6111,12	ECJ1XF1C104Z	C 0.1UF, Z, 16V	2	
C6401-08	TCUY1C105ZFN	C 1UF, 16V	8	F1J1C1050006
C6411	ECJ2XB1H222K	C 2200PF, K, 50V	1	
C6412	ECJ2XB1H102K	C 1000PF, K, 50V	1	
C6417	ECJ2XB1H221K	C 220PF, K, 50V	1	
C6421	ECJ2XB1H222K	C 2200PF, K, 50V	1	
C6422	ECJ2XB1H102K	C 1000PF, K, 50V	1	
C6427	F1L2E1040002	E 1000UF, 25V	1	
C6429	F1L2E1040002	E 1000UF, 25V	1	
C6431	F1L2E1040002	E 1000UF, 25V	1	
C6433	F1L2E1040002	E 1000UF, 25V	1	
C6452	ECJ2XB1H103K	C 0.01UF, K, 50V	1	
C6453	TCUY1C105ZFN	C 1UF, 16V	1	F1J1C1050006
C6454	ECJ2XB1H103K	C 0.01UF, K, 50V	1	
C6455	EEUFC1E221	E 220UF, 25V	1	
C6456	ECA2CM101	E 100UF, 160V	1	
C6458	ECJ4XB1E475M	C 4.7UF, M, 25V	1	
C6459	EEUFC1E470	E 47UF, 25V	1	
C6461	ECA1HM101	E 100UF, 50V	1	
C6462-65	ECJ4XB1E475M	C 4.7UF, M, 25V	4	
C6466	ECJ2XB1H103K	C 0.01UF, K, 50V	1	
C6467	ECJ2XB1H472K	C 4700PF, K, 50V	1	
C6468	TCUY1C105ZFN	C 1UF, 16V	1	F1J1C1050006
C6469	EEUFC1E221	E 220UF, 25V	1	
C6470	ECA1HM221	E 220UF, 50V	1	
C6471	TCUY1C105ZFN	C 1UF, 16V	1	F1J1C1050006
C6472	ECJ2XB1H103K	C 0.01UF, K, 50V	1	
C6473	TCUY1C105ZFN	C 1UF, 16V	1	F1J1C1050006
C6474	ECJ2XB1H103K	C 0.01UF, K, 50V	1	
C6475	EEUFC1E221	E 220UF, 25V	1	
C6476	ECA2CM101	E 100UF, 160V	1	
C6478	ECJ2XB1H104K	C 0.1UF, K, 50V	1	
C6481	F1L2J562A010	C 5600UF, K,6.3V	1	
C6485	F1L2J562A010	C 5600UF, K,6.3V	1	
C6486	F1L2J392A010	E 22UF, 63V	1	
C6490,91	ECJ3XK2J102K	C 1000PF, K,630V	2	
C6492	ECA2VHG100	E 10UF, 350V	1	
C6493	ECJ3XB2J222K	C 2200PF, K,630V	1	
C6501-08	TCUY1C105ZFN	C 1UF, 16V	8	F1J1C1050006
C6509	ECJ2XC1H102J	C 1000PF, J, 50V	1	
C6511,12	ECJ4XB1E475M	C 4.7UF, M, 25V	2	
C6513	ECA2CM101	E 100UF, 160V	1	

Ref. No.	Part No.	Part Name & Description	Pcs	Remarks
C6521	EEUFC1E470	E 47UF, 25V	1	
C6523	ECA1VM470	E 47UF, 35V	1	
C6524,25	ECJ3FC2D102J	C 1000PF, J,200V	2	
C6526	ECA2EHG220	E 22UF, 250V	1	
C6529	ECJ3XK2J102K	C 1000PF, K,630V	1	
C6531,32	ECJ4XB1E475M	C 4.7UF, M, 25V	2	
C6534	ECJ3XK2J102K	C 1000PF, K,630V	1	
C6541	ECJ4XB1E475M	C 4.7UF, M, 25V	1	
C6543,44	ECJ3FC2D102J	C 1000PF, J,200V	2	
C6546	TCUY1C105ZFN	C 1UF, 16V	1	F1J1C1050006
C6547	ECJ3FC2D102J	C 1000PF, J,200V	1	
C6550	ECA2CM101	E 100UF, 160V	1	
C6571	TCUY1C105ZFN	C 1UF, 16V	1	F1J1C1050006
C6575-78	TCUY1C105ZFN	C 1UF, 16V	4	F1J1C1050006
C6580,81	TCUY1C105ZFN	C 1UF, 16V	2	F1J1C1050006
C6584	ECJ3YB1E105K	C 1UF, K, 25V	1	
C6585	TCUY1C105ZFN	C 1UF, 16V	1	F1J1C1050006
C6588	TCUY1C105ZFN	C 1UF, 16V	1	F1J1C1050006
C6589	ECJ4XB1E475M	C 4.7UF, M, 25V	1	
C6590	TCUY1C105ZFN	C 1UF, 16V	1	F1J1C1050006
C6591	ECJ4XB1E475M	C 4.7UF, M, 25V	1	
C6598	ECA2CHG220	E 22UF, 160V	1	
C6601-04	ECA2DHG221	E 220UF, 200V	4	
C6607	ECJ3YB1E105K	C 1UF, K, 25V	1	
C6608	ECA1EM471	E 470UF, 25V	1	
C6611	F1L2J392A010	E 22UF, 63V	1	
C6617	F1L2J562A010	C 5600UF, K,6.3V	1	
C6620	ECJ2XB1H104K	C 0.1UF, K, 50V	1	
C6621-28	ECQE2105RKB	P 1UF, 250V	8	
C6631,32	ECJ4XB1E475M	C 4.7UF, M, 25V	2	
C6633	TCUY1C105ZFN	C 1UF, 16V	1	F1J1C1050006
C6634,35	ECJ4XB1E475M	C 4.7UF, M, 25V	2	
C6636	TCUY1C105ZFN	C 1UF, 16V	1	F1J1C1050006
C6637	EEUFC1E121	E 120UF, 25V	1	
C6639	F2A2D1510004	E 150UF, 200V	1	
C6642	F1L2E1040002	E 1000UF, 25V	1	
C6644	ECJ4XB1E475M	C 4.7UF, M, 25V	1	
C6645	ECJ3YB1E105K	C 1UF, K, 25V	1	
C6646	F2A1V121A085	E 120UF, 35V	1	
C6647	TCUY1C105ZFN	C 1UF, 16V	1	F1J1C1050006
C6650	ECQE2224KF	P 0.22UF, K,250V	1	
C6651,52	ECJ2XB1H103K	C 0.01UF, K, 50V	2	
C6655,56	EEUFC1A101	E 100UF, 10V	2	
C6660,61	ECJ3XK2J102K	C 1000PF, K,630V	2	
C6695,96	ECJ3XK2J102K	C 1000PF, K,630V	2	
C6701-04	F2A2D1510004	E 150UF, 200V	4	
C6707,08	EEUED2C470	E 47UF, 160V	2	
C6709	ECJ2XB1H103K	C 0.01UF, K, 50V	1	
C6718	F1L2J392A010	E 22UF, 63V	1	
C6721-28	ECQE2105RKB	P 1UF, 250V	8	
C6731,32	ECJ4XB1E475M	C 4.7UF, M, 25V	2	
C6733	TCUY1C105ZFN	C 1UF, 16V	1	F1J1C1050006
C6734,35	ECJ4XB1E475M	C 4.7UF, M, 25V	2	
C6736	TCUY1C105ZFN	C 1UF, 16V	1	F1J1C1050006
C6737	ECQE2224KF	P 0.22UF, K,250V	1	
C6739	F1L2E1040002	E 1000UF, 25V	1	
C6740	ECJ3XB2J222K	C 2200PF, K,630V	1	
C6741,42	TCUY1C105ZFN	C 1UF, 16V	2	F1J1C1050006

Ref. No.	Part No.	Part Name & Description	Pcs	Remarks
C6744	ECJ4XB1E475M	C 4.7UF, M, 25V	1	
C6746	ECJ4XB1E475M	C 4.7UF, M, 25V	1	
C6747	F2A2D1510004	E 150UF, 200V	1	
C6748	EEUFC1E221	E 220UF, 25V	1	
C6749	ECJ4XB1E475M	C 4.7UF, M, 25V	1	
C6750,51	TCUY1C105ZFN	C 1UF, 16V	2	F1J1C1050006
C6753,54	EEUFC1E221	E 220UF, 25V	2	
C6755	ECJ3YB1E105K	C 1UF, K, 25V	1	
C6756	EEUFC1A101	E 100UF, 10V	1	
C6757	ECJ4XB1E475M	C 4.7UF, M, 25V	1	
C6760,61	ECJ3XK2J102K	C 1000PF, K,630V	2	
C6772	F1L2J392A010	E 22UF, 63V	1	
C6774,75	F1L2J562A010	C 5600UF, K,6.3V	2	
C7101	TCUY1C105ZFN	C 1UF, 16V	1	F1J1C1050006
C7102	ECJ3XB0J106M	C 10UF, M,6.3V	1	
C7104-06	TCUY1C105ZFN	C 1UF, 16V	3	F1J1C1050006
C7107	F1K2A1040004	C 0.1UF, 100V	1	
C7113	ECJ3XB2A474K	C 0.47UF, 6.3V	1	
C7115	ECJ3XB2A474K	C 0.47UF, 6.3V	1	
C7117	ECJ3XB2A474K	C 0.47UF, 6.3V	1	
C7135	TCUY1C105ZFN	C 1UF, 16V	1	F1J1C1050006
C7136	ECJ3XB0J106M	C 10UF, M,6.3V	1	
C7137	TCUY1C105ZFN	C 1UF, 16V	1	F1J1C1050006
C7138	ECJ3XB0J106M	C 10UF, M,6.3V	1	
C7139	TCUY1C105ZFN	C 1UF, 16V	1	F1J1C1050006
C7140	ECJ3XB0J106M	C 10UF, M,6.3V	1	
C7142	ECJ1XC1H101J	C 100PF, J, 50V	1	
C7153-55	ECJ1XC1H101J	C 100PF, J, 50V	3	
C7201	TCUY1C105ZFN	C 1UF, 16V	1	F1J1C1050006
C7202	ECJ3XB0J106M	C 10UF, M,6.3V	1	
C7203-06	TCUY1C105ZFN	C 1UF, 16V	4	F1J1C1050006
C7207	F1K2A1040004	C 0.1UF, 100V	1	
C7210	TCUY1C105ZFN	C 1UF, 16V	1	F1J1C1050006
C7211	ECJ3XB2A474K	C 0.47UF, 6.3V	1	
C7213	ECJ3XB2A474K	C 0.47UF, 6.3V	1	
C7215	ECJ3XB2A474K	C 0.47UF, 6.3V	1	
C7217	ECJ3XB2A474K	C 0.47UF, 6.3V	1	
C7235	TCUY1C105ZFN	C 1UF, 16V	1	F1J1C1050006
C7236	ECJ3XB0J106M	C 10UF, M,6.3V	1	
C7237	TCUY1C105ZFN	C 1UF, 16V	1	F1J1C1050006
C7238	ECJ3XB0J106M	C 10UF, M,6.3V	1	
C7239	TCUY1C105ZFN	C 1UF, 16V	1	F1J1C1050006
C7240	ECJ3XB0J106M	C 10UF, M,6.3V	1	
C7242,43	TCUY1C105ZFN	C 1UF, 16V	2	F1J1C1050006
C7252-56	ECJ1XC1H101J	C 100PF, J, 50V	5	
C7501,02	EEUFC1E471	E 470UF, 25V	2	
C7503	ECJ2XB1H103K	C 0.01UF, K, 50V	1	
C7505,06	EEUFC1E471	E 470UF, 25V	2	
C7509	ECA1HHG100	E 10UF, 50V	1	
C7511,12	EEUFC1E471	E 470UF, 25V	2	
C7513	ECJ2XB1H103K	C 0.01UF, K, 50V	1	
C7516	EEUFC1E471	E 470UF, 25V	1	
C7517	EEUFC1C821	E 820UF, 16V	1	
C7518	ECJ2XB1H103K	C 0.01UF, K, 50V	1	
C7521	EEUFC1E471	E 470UF, 25V	1	
C7522	EEUFC1C821	E 820UF, 16V	1	
C7523	ECJ2XB1H103K	C 0.01UF, K, 50V	1	
C7525	ECA1HHG100	E 10UF, 50V	1	
C7530-34	EEUFC1C331	E 330UF, 16V	5	
C7535-37	ECJ2VF1C474Z	C 0.47UF, Z, 16V	3	
C7541-44	ECJ2VF1C104Z	C 0.1UF, Z, 16V	4	

Ref. No.	Part No.	Part Name & Description	Pcs	Remarks
C7551,52	EEUFC1E221	E 220UF, 25V	2	
C7554	ECJ2XB1H682K	C 6800PF, K, 50V	1	
C7568	ECA1HHG220	E 22UF, 50V	1	
C7570,71	ECJ2XB1H103K	C 0.01UF, K, 50V	2	
C7572	ECA1HHG100	E 10UF, 50V	1	
C7581	ECA1HHG4R7	E 4.7UF, 50V	1	
C7582	ECJ2VB1C224K	C 0.22UF, K, 16V	1	
C7583	ECJ2VF1H104Z	C 0.1UF, Z, 50V	1	
C7584	ECJ2XC1H271J	C 270PF, J, 50V	1	
C7585	EEUFC1H100L	E 10UF, 50V	1	
C9030,31	ECJ3XB0J106M	C 10UF, M,6.3V	2	
C9032,33	ECJ1XF1C104Z	C 0.1UF, Z, 16V	2	
C9034,35	ECJ1XB1C104K	C 0.1UF, Z, 16V	2	
C9036,37	ECJ3XB0J106M	C 10UF, M,6.3V	2	
C9038,39	ECJ1XF1C104Z	C 0.1UF, Z, 16V	2	
C9040	ECJ2VB1E473K	C 0.047UF, K, 25V	1	
C9041	ECJ1XF1C104Z	C 0.1UF, Z, 16V	1	
C9042,43	ECJ2VB1E473K	C 0.047UF, K, 25V	2	
C9044	ECJ1XB1H102K	C 1000UF, Z, 50V	1	
C9045,46	ECJ1XF1C104Z	C 0.1UF, Z, 16V	2	
C9048,49	ECJ1XF1C104Z	C 0.1UF, Z, 16V	2	
C9051	ECJ1XB1C393K	C 0.039UF, K, 16V	1	
C9053	ECJ1VB1H392K	C 3900PF, K, 50V	1	
C9054-56	ECJ1XF1C104Z	C 0.1UF, Z, 16V	3	
C9077	ECJ1XF1C104Z	C 0.1UF, Z, 16V	1	
C9149	ECJ1XC1H100D	C 10PF, D, 50V	1	
C9150	ECJ1XB1C104K	C 0.1UF, Z, 16V	1	
C9151	ECJ1XF1C104Z	C 0.1UF, Z, 16V	1	
C9153	ECJ3XB0J106M	C 10UF, M,6.3V	1	
C9154	ECJ1XF1C104Z	C 0.1UF, Z, 16V	1	
C9156	ECJ3XB0J106M	C 10UF, M,6.3V	1	
C9157-60	ECJ1XF1C104Z	C 0.1UF, Z, 16V	4	
C9161	ECJ1XB1C104K	C 0.1UF, Z, 16V	1	
C9162	ECJ3XB0J106M	C 10UF, M,6.3V	1	
C9163-70	ECJ1XF1C104Z	C 0.1UF, Z, 16V	8	
C9172-74	ECJ1XF1C104Z	C 0.1UF, Z, 16V	3	
C9175	ECJ3XB0J106M	C 10UF, M,6.3V	1	
C9176	ECJ1XF1C104Z	C 0.1UF, Z, 16V	1	
C9178-82	ECJ1XF1C104Z	C 0.1UF, Z, 16V	5	
C9183	ECJ1XC1H102J	C 1000PF, J, 50V	1	
C9186	ECJ1XC1H100D	C 10PF, D, 50V	1	
C9187	ECJ1XF1C104Z	C 0.1UF, Z, 16V	1	
C9191	ECJ1VF1H103Z	C 0.01UF, Z, 50V	1	
C9192	TCUY1C105ZFN	C 1UF, 16V	1	F1J1C1050006
C9195	TCUY1C105ZFN	C 1UF, 16V	1	F1J1C1050006
C9196	ECJ3VB1C104K	C 0.10UF, K, 16V	1	
C9197	ECJ2VB1E563K	C 0.056UF, K, 25V	1	
C9198	ECJ2VB1C104K	C 0.1UF, K, 16V	1	
C9199,00	ECJ1XF1C104Z	C 0.1UF, Z, 16V	2	
C9207	ECJ3XB0J106M	C 10UF, M,6.3V	1	
C9301	ECJ1VF1H103Z	C 0.01UF, Z, 50V	1	
C9302	ECJ1XF1C104Z	C 0.1UF, Z, 16V	1	
C9303	EEVHB1C470	E 47UF, 16V	1	
C9304	ECJ3XF1C475Z	C 4.7UF, Z, 16V	1	
C9305	ECJ3XB0J106M	C 10UF, M,6.3V	1	
C9307	ECJ1XF1C104Z	C 0.1UF, Z, 16V	1	
C9308	ECJ1XB1C104K	C 0.1UF, Z, 16V	1	
C9309	ECJ3XB0J106M	C 10UF, M,6.3V	1	
C9310	ECJ1XC1H330J	C 33PF, J, 50V	1	
C9311	ECJ1XF1C104Z	C 0.1UF, Z, 16V	1	

Ref. No.	Part No.	Part Name & Description	Pcs	Remarks
C9314,15	ECJ3XF1C475Z	C 4.7UF, Z, 16V	2	
C9316	ECJ1XF1C104Z	C 0.1UF, Z, 16V	1	
C9449	ECJ1XF1C104Z	C 0.1UF, Z, 16V	1	
C9450	ECJ3XB0J106M	C 10UF, M,6.3V	1	
C9453	ECJ1XF1C104Z	C 0.1UF, Z, 16V	1	
C9454,55	ECJ3XF1C475Z	C 4.7UF, Z, 16V	2	
C9465	ECJ1XF1C104Z	C 0.1UF, Z, 16V	1	
C9466	EEVHB0G221	E 220UF, 4V	1	
C9467	ECJ1XF1C104Z	C 0.1UF, Z, 16V	1	
C9468	ECJ3XB0J106M	C 10UF, M,6.3V	1	
C9470	ECJ1XC1H101J	C 100PF, J, 50V	1	
C9471	ECJ1XF1C104Z	C 0.1UF, Z, 16V	1	
C9472	ECJ3XB0J106M	C 10UF, M,6.3V	1	
C9474	ECJ3XF1C475Z	C 4.7UF, Z, 16V	1	
C9475-77	ECJ1XF1C104Z	C 0.1UF, Z, 16V	3	
C9478	ECJ3XB0J106M	C 10UF, M,6.3V	1	
C9479-82	ECJ1XF1C104Z	C 0.1UF, Z, 16V	4	
C9485-93	ECJ1XF1C104Z	C 0.1UF, Z, 16V	9	
C9494,95	ECJ3XF1C475Z	C 4.7UF, Z, 16V	2	
C9496	ECJ1XF1C104Z	C 0.1UF, Z, 16V	1	
C9598,99	ECJ1VF1H103Z	C 0.01UF, Z, 50V	2	
C9601-05	ECJ1XF1C104Z	C 0.1UF, Z, 16V	5	
C9607	ECJ1XF1C104Z	C 0.1UF, Z, 16V	1	
C9611	ECJ3XF1C475Z	C 4.7UF, Z, 16V	1	
C9612	ECJ1XF1C104Z	C 0.1UF, Z, 16V	1	
C9613	ECJ1VF1H103Z	C 0.01UF, Z, 50V	1	
C9616	ECJ1XF1C104Z	C 0.1UF, Z, 16V	1	
C9620,21	ECJ1XF1C104Z	C 0.1UF, Z, 16V	2	
C9623	ECJ1XF1C104Z	C 0.1UF, Z, 16V	1	
C9625	ECJ1XF1C104Z	C 0.1UF, Z, 16V	1	
C9629,30	ECJ1XF1C104Z	C 0.1UF, Z, 16V	2	
C9632	ECJ1XF1C104Z	C 0.1UF, Z, 16V	1	
C9635	ECJ1XF1C104Z	C 0.1UF, Z, 16V	1	
C9700,01	ECJ1XF1C104Z	C 0.1UF, Z, 16V	2	
C9702	EEVHB1C470	E 47UF, 16V	1	
C9703	ECJ1XC1H101J	C 100PF, J, 50V	1	
C9705	ECJ1XF1H102Z	C 1000PF, Z, 50V	1	
C9706,07	ECJ1XF1C104Z	C 0.1UF, Z, 16V	2	
C9708-10	EEVHB1C470	E 47UF, 16V	3	
C9712-17	ECJ1XC1H101J	C 100PF, J, 50V	6	
C9718	ECJ1XF1C104Z	C 0.1UF, Z, 16V	1	
C9719	ECJ3XF1C475Z	C 4.7UF, Z, 16V	1	
C9720	ECJ1XF1C104Z	C 0.1UF, Z, 16V	1	
C9722,23	ECJ1XC1H100D	C 10PF, D, 50V	2	
C9724	ECJ1XF1C104Z	C 0.1UF, Z, 16V	1	
C9725	ECJ3XB0J106M	C 10UF, M,6.3V	1	
C9726	ECJ3XF1C475Z	C 4.7UF, Z, 16V	1	
C9727,28	ECJ1XF1C104Z	C 0.1UF, Z, 16V	2	
C9729	ECJ3XF1C475Z	C 4.7UF, Z, 16V	1	
C9730-33	ECJ1XF1C104Z	C 0.1UF, Z, 16V	4	
C9737	ECJ1XF1C104Z	C 0.1UF, Z, 16V	1	
C9739-41	ECJ1XF1C104Z	C 0.1UF, Z, 16V	3	
C9742	EEVHB1C470	E 47UF, 16V	1	
C9743	TCUY1C105ZFN	C 1UF, 16V	1	F1J1C1050006
C9748,49	ECJ1XF1C104Z	C 0.1UF, Z, 16V	2	
C9750	ECJ3XF1C475Z	C 4.7UF, Z, 16V	1	
C9751,52	ECJ1VF1H103Z	C 0.01UF, Z, 50V	2	

Ref. No.	Part No.	Part Name & Description	Pcs	Remarks
C9753,54	ECJ1XF1C104Z	C 0.1UF, Z, 16V	2	
C9755,56	ECJ1XF1H102Z	C 1000PF, Z, 50V	2	
C9759	ECJ1XF1C104Z	C 0.1UF, Z, 16V	1	
C9760	ECJ1VB1C563K	C 0.056UF, K, 16V	1	
C9761,62	ECJ1XC1H330J	C 33PF, J, 50V	2	
C9763	ECJ1VF1H103Z	C 0.01UF, Z, 50V	1	
C9765	ECJ1XF1C104Z	C 0.1UF, Z, 16V	1	
C9766	ECJ3XB0J106M	C 10UF, M,6.3V	1	
C9767,68	TCUY1C105ZFN	C 1UF, 16V	2	F1J1C1050006
C9769	ECJ1XF1C104Z	C 0.1UF, Z, 16V	1	
C9951-53	EEVHB1C470	E 47UF, 16V	3	
C9954-56	ECJ1XF1C104Z	C 0.1UF, Z, 16V	3	
C9957	ECJ3XF1C475Z	C 4.7UF, Z, 16V	1	
C9958,59	F2H1E221A007	E 2.2UF, 25V	2	
C9960	ECJ3VB1C104K	C 0.10UF, K, 16V	1	
C9961	EEFUD0G121ER	120UF	1	
C9964,65	ECJ1XF1C104Z	C 0.1UF, Z, 16V	2	
C9966	EEVHB0G221	E 220UF, 4V	1	
C9967	ECJ3XB0J106M	C 10UF, M,6.3V	1	
C9968	EEVHB1C470	E 47UF, 16V	1	
C9969	ECJ3XF1C475Z	C 4.7UF, Z, 16V	1	
C9970	ECJ2XB1E104K	C 0.1UF, K, 25V	1	
C9971	ECJ2XC1H222J	C 2200PF, J, 50V	1	
CB1-B7	K1MN48A00002	CONNECTOR	7	
CF901,02	ERZV10V621P2	VARISTOR	2	⚠
D3	K1KA40A00140	40P CONNECTOR	1	
D003	MA152K	DIODE	1	TH-37/42PA30H/M/R
D4	K1KA12A00227	12P CONNECTOR	1	
D009	MA8056M	ZENER DIODE	1	MAZ80560M
D12	K1KA07A00189	7P CONNECTOR	1	
D20	K1KA20A00180	20P CONNECTOR	1	
D25	K1KA08A00293	8P CONNECTOR	1	
D27	K1KA09A00077	9P CONNECTOR	1	
D31,32	K1MN50B00026	50P CONNECTOR	2	
D053	MA152K	DIODE	1	TH-37/42PA30H/M/R
D080,81	MA3020	ZENER DIODE	2	TH-37PA30A
D084	MA152K	DIODE	1	TH-37PA30A
D300,01	MA152K	DIODE	2	MA3X152K
D302	LNJ107W5PRW	LED	1	
D303	MA152K	DIODE	1	MA3X152K
D308	MA8056M	ZENER DIODE	1	MAZ80560M
D309,10	MA152K	DIODE	2	MA3X152K
D311	MA8056M	ZENER DIODE	1	MAZ80560M
D317	MA3062M	ZENER DIODE	1	MAZ30620M
D401-03	MA152K	DIODE	3	MA3X152K
D404	S1WBA80Z	DIODE	1	⚠
D405	MA3082L	ZENER DIODE	1	MAZ30820L
D406	ERA22-10	DIODE	1	B0EAEV000002
D407	B0HCMM000001	DIODE	1	
D408	PC123FY2	PHOTO COUPLER	1	B3PAA0000012 ⚠
D409-11	B0HCMM000001	DIODE	3	
D412	MA3051M	ZENER DIODE	1	MAZ30510M
D413	MA3200M	ZENER DIODE	1	MAZ32000M
D451	B0FBBR000019	DIODE	1	⚠
D452	B0HCMM000001	DIODE	1	
D453	MA3270M	ZENER DIODE	1	MAZ32700M
D454	B0HCMM000001	DIODE	1	
D457	B0HARR000016	DIODE	1	
D458,59	MA3270M	ZENER DIODE	2	MAZ32700M

Ref. No.	Part No.	Part Name & Description	Pcs	Remarks
D460	MA3100M	ZENER DIODE	1	MAZ31000M
D462	B0EAKT000012	DIODE	1	
D463	M1FS4	DIODE	1	
D550	B0HCMM000001	DIODE	1	
D551,52	B0BA02700021	DIODE	2	
D553-56	B0HCMM000001	DIODE	4	
D557,58	TMPG10G3	DIODE	2	B0BA01000046
D559	B0HCMM000001	DIODE	1	
D560	RC3B2LFU1	DIODE	1	
D561,62	B0HCMM000001	DIODE	2	
D563	RC3B2LFU1	DIODE	1	
D564	B0HCMM000001	DIODE	1	
D565,66	PC123FY2	PHOTO COUPLER	2	B3PAA0000012 ⚠
D567	B0HARR000009	DIODE	1	
D568	B0HFRJ000012	DIODE	1	
D570	B0HARR000009	DIODE	1	
D571	MA3056M	ZENER DIODE	1	MAZ30560M
D572	B0HCMM000001	DIODE	1	
D573,74	B0HFRJ000012	DIODE	2	
D575	M1FS4	DIODE	1	
D576	B0HCMM000001	DIODE	1	
D577-84	MA152K	DIODE	8	MA3X152K
D585	MA3056M	ZENER DIODE	1	MAZ30560M
D586	B0HCMM000001	DIODE	1	
D587	M1FS4	DIODE	1	
D589	B0HCMM000001	DIODE	1	
D590	MA152K	DIODE	1	MA3X152K
D592,93	B0HCMM000001	DIODE	2	
D594	MA3056M	ZENER DIODE	1	MAZ30560M
D595	MA152K	DIODE	1	MA3X152K
D596	MA3051M	ZENER DIODE	1	MAZ30510M
D650	B0HCMM000001	DIODE	1	
D652	B0HCMM000001	DIODE	1	
D654	MA3056M	ZENER DIODE	1	MAZ30560M
D660	B0HFRJ000012	DIODE	1	
D661	MA152K	DIODE	1	MA3X152K
D920	D4SB80Z	DIODE	1	B0EBNT000004 ⚠
D921	B0EAKT000017	DIODE	1	
D922	B0HCMM000001	DIODE	1	
D925,26	B0HCMM000001	DIODE	2	
D929	TMPG10G3	DIODE	1	B0BA01000046
D970	FML-G12S	DIODE	1	
D971	RL3Z	DIODE	1	
D990	MA152K	DIODE	1	MA3X152K
D1000	MA152K	DIODE	1	MA3X152K
D1002	MA152K	DIODE	1	MA3X152K
D1003	MA3033L	ZENER DIODE	1	MAZ30330L
D1004	MA111	DIODE	1	MA2J111
D1006	MA152K	DIODE	1	MA3X152K
D1007	MA3047M	ZENER DIODE	1	MAZ30470M
D1011	MA3062M	ZENER DIODE	1	MAZ30620M
D1015	MA152K	DIODE	1	MA3X152K
D1227,28	MA111	DIODE	2	MA2J111
D1231,32	MA111	DIODE	2	MA2J111
D1234	MA111	DIODE	1	MA2J111
D1300,01	MA152K	DIODE	2	MA3X152K
D1302	MA3033L	ZENER DIODE	1	MAZ30330L
D1310-12	MA3140M	ZENER DIODE	3	MAZ31400M
D1488	MA152K	DIODE	1	MA3X152K
D1490	MA111	DIODE	1	MA2J111
D1850-52	MA3140M	ZENER DIODE	3	MAZ31400M
D1853-56	MA3150M	ZENER DIODE	4	MAZ31500M
D1857,58	MA111	DIODE	2	MA2J111
D2001	MA152K	DIODE	1	MA3X152K
D2003	MA152K	DIODE	1	MA3X152K
D2210	MA3036H	ZENER DIODE	1	MAZ30360H

Ref. No.	Part No.	Part Name & Description	Pcs	Remarks
D2301-04	M1FS4	DIODE	4	
D2305	S3L20U	DIODE	1	
D2311,12	MA152K	DIODE	2	MA3X152K
D2314,15	MA111	DIODE	2	MA2J111
D2653	MA152K	DIODE	1	MA3X152K
D3124	MA152	DIODE	1	
D3125	B0BC3R400001	DIODE	1	
D3126,27	MA111	DIODE	2	MA2J111
D3200	MA3120M	ZENER DIODE	1	MAZ31200M
D3215	MA8140M	ZENER DIODE	1	MAZ81400M
D3219	MA8140M	ZENER DIODE	1	MAZ81400M
D3222	MA8140M	ZENER DIODE	1	MAZ81400M
D3225	MA8140M	ZENER DIODE	1	MAZ81400M
D3232-35	MA8140M	ZENER DIODE	4	MAZ81400M
D3715	MA3140M	ZENER DIODE	1	MAZ31400M
D3764	MA3140M	ZENER DIODE	1	MAZ31400M
D3766	MA3140M	ZENER DIODE	1	MAZ31400M
D3767,68	MA165	DIODE	2	MA2C165
D3769,70	MA4027L	ZENER DIODE	2	
D3771,72	MA165	DIODE	2	MA2C165
D3773,74	MA4068M	ZENER DIODE	2	MAZ40680M
D6401-03	MA8056H	ZENER DIODE	3	MAZ80560H
D6405	D1FL40F4063	DIODE	1	B0ECHP000001
D6406,07	MA8056H	ZENER DIODE	2	MAZ80560H
D6409-12	D1FL40F4063	DIODE	4	B0ECHP000001
D6451	M1FS4	DIODE	1	
D6453	MA111	DIODE	1	MA2J111
D6455	MA111	DIODE	1	MA2J111
D6456	D1FL40F4063	DIODE	1	B0ECHP000001
D6459	MA111	DIODE	1	MA2J111
D6460,61	B0HCKS000001	DIODE	2	
D6462	M1FS4	DIODE	1	
D6463	MA8056H	ZENER DIODE	1	MAZ80560H
D6464	M1FS4	DIODE	1	
D6465,66	MA8330M	ZENER DIODE	2	MAZ83300M
D6468	MA111	DIODE	1	MA2J111
D6470,71	MA111	DIODE	2	MA2J111
D6473	MA111	DIODE	1	MA2J111
D6475	MA111	DIODE	1	MA2J111
D6476	D1FL40F4063	DIODE	1	B0ECHP000001
D6477	MA111	DIODE	1	MA2J111
D6478	B0HCKS000001	DIODE	1	
D6479	MA111	DIODE	1	MA2J111
D6481,82	MA8330M	ZENER DIODE	2	MAZ83300M
D6483-90	MA8056H	ZENER DIODE	8	MAZ80560H
D6491-94	D1FL40F4063	DIODE	4	B0ECHP000001
D6495	B0HCKS000001	DIODE	1	
D6496	M1FS4	DIODE	1	
D6509	MA111	DIODE	1	MA2J111
D6511	M1FL20UF4063	DIODE	1	B0HCMM000009
D6512-14	MA111	DIODE	3	MA2J111
D6515	MA8240M	ZENER DIODE	1	MAZ82400M
D6516	MA111	DIODE	1	MA2J111
D6519	MA111	DIODE	1	MA2J111
D6520	B0JCKG000001	DIODE	1	
D6521	D1FL40F4063	DIODE	1	B0ECHP000001
D6522	MA111	DIODE	1	MA2J111
D6523	D1FL40F4063	DIODE	1	B0ECHP000001

Ref. No.	Part No.	Part Name & Description	Pcs	Remarks
D6524	MA8051L	ZENER DIODE	1	MAZ80510L
D6525	MA111	DIODE	1	MA2J111
D6526	M1FL20UF4063	DIODE	1	B0HCMM000009
D6527	MA111	DIODE	1	MA2J111
D6529	M1FS4	DIODE	1	
D6541	B0HCKS000001	DIODE	1	
D6542	MA111	DIODE	1	MA2J111
D6543	MA8051L	ZENER DIODE	1	MAZ80510L
D6544	MA111	DIODE	1	MA2J111
D6545	MA8051L	ZENER DIODE	1	MAZ80510L
D6546-48	MA8330M	ZENER DIODE	3	MAZ83300M
D6549,50	MA111	DIODE	2	MA2J111
D6551	M1FS4	DIODE	1	
D6552,53	MA111	DIODE	2	MA2J111
D6570	M1FL20UF4063	DIODE	1	B0HCMM000009
D6572	D1FL40F4063	DIODE	1	B0ECHP000001
D6582	MA8051L	ZENER DIODE	1	MAZ80510L
D6583	LNJ201LPQJA	LED	1	
D6584	MA111	DIODE	1	MA2J111
D6585,86	MA8330M	ZENER DIODE	2	MAZ83300M
D6611,12	M1FS4	DIODE	2	
D6615	D1FL40F4063	DIODE	1	B0ECHP000001
D6620-22	SF20LC30F10	DIODE	3	
D6624	SF20LC30F10	DIODE	1	
D6629	B0HBSM000031	DIODE	1	
D6635	MA8051L	ZENER DIODE	1	MAZ80510L
D6636	MA111	DIODE	1	MA2J111
D6637	D1FL40F4063	DIODE	1	B0ECHP000001
D6640	D1FL40F4063	DIODE	1	B0ECHP000001
D6641,42	M1FS4	DIODE	2	
D6645-47	D1FL40F4063	DIODE	3	B0ECHP000001
D6711,12	M1FS4	DIODE	2	
D6715	D1FL40F4063	DIODE	1	B0ECHP000001
D6720-22	SF20LC30F10	DIODE	3	
D6724	SF20LC30F10	DIODE	1	
D6729	B0HBSM000031	DIODE	1	
D6735	MA8051L	ZENER DIODE	1	MAZ80510L
D6736	MA111	DIODE	1	MA2J111
D6737	D1FL40F4063	DIODE	1	B0ECHP000001
D6740,41	D1FL40F4063	DIODE	2	B0ECHP000001
D6750,51	D1FL40F4063	DIODE	2	B0ECHP000001
D6752,53	M1FS4	DIODE	2	
D6754	D1FL40F4063	DIODE	1	B0ECHP000001
D6755	M1FS4	DIODE	1	
D6757	D1FL40F4063	DIODE	1	B0ECHP000001
D6758,59	MA111	DIODE	2	MA2J111
D6762	MA111	DIODE	1	MA2J111
D6763	MA8051L	ZENER DIODE	1	MAZ80510L
D6764	MA111	DIODE	1	MA2J111
D6765	LNJ201LPQJA	LED	1	
D6766,67	MA8330M	ZENER DIODE	2	MAZ83300M
D6768	MA111	DIODE	1	MA2J111
D6769	LNJ201LPQJA	LED	1	
D7201-04	MA152K	DIODE	4	MA3X152K
D7501	MA737	DIODE	1	MA2Q737
D7502	MA2120A	ZENER DIODE	1	MAZ21200A
D7504	MA737	DIODE	1	MA2Q737
D7505	MA2120A	ZENER DIODE	1	MAZ21200A
D7507	MA737	DIODE	1	MA2Q737
D7508	MA2068A	ZENER DIODE	1	

Ref. No.	Part No.	Part Name & Description	Pcs	Remarks
D7511	MA2068A	ZENER DIODE	1	
D7512	MA737	DIODE	1	MA2Q737
D7513	MA2051A	ZENER DIODE	1	MAZ20510A
D7515	MA737	DIODE	1	MA2Q737
D7537,38	MA111	DIODE	2	MA2J111
D7539	MA3047H	ZENER DIODE	1	
D7540	MA3039H	ZENER DIODE	1	MAZ30390H
D7541,42	MA111	DIODE	2	MA2J111
D7543	MA728	DIODE	1	MA2J728
D7544,45	MA111	DIODE	2	MA2J111
D7546	MA152	DIODE	1	
D7547-49	MA111	DIODE	3	MA2J111
D7551	MA737	DIODE	1	MA2Q737
D7552	MA152K	DIODE	1	MA3X152K
D7581	MA111	DIODE	1	MA2J111
D7582	MA3X78900L	ZENER DIODE	1	
D9705-13	MA3062M	ZENER DIODE	9	MAZ30620M
D9715	MA3062M	ZENER DIODE	1	MAZ30620M
D9716	MA111	DIODE	1	MA2J111
D9719,20	MA3062M	ZENER DIODE	2	MAZ30620M
D9723	MA3062M	ZENER DIODE	1	MAZ30620M
D9724	MA111	DIODE	1	MA2J111
D9727	MA152K	DIODE	1	MA3X152K
D9730	MA152K	DIODE	1	MA3X152K
D9769	MA152K	DIODE	1	MA3X152K
D9771	MA152K	DIODE	1	MA3X152K
D9952	M1FS4	DIODE	1	
D9953	MA152K	DIODE	1	MA3X152K
D9954	M1FS4	DIODE	1	
D9955	B0JCPD000010	DIODE	1	
DG1	K1KB50A00127	50P CONNECTOR	1	
DG2	K1KA40B00062	40P CONNECTOR	1	
DG3	K1KA30B00054	30P CONNECTOR	1	
DG4	K1KB50A00127	50P CONNECTOR	1	
DG6	K1KA20B00103	20P CONNECTOR	1	
DG7	TJSF18228	28P CONNECTOR	1	K1MN28A00023
DG8	K1KA20B00125	20P CONNECTOR	1	
DG10	K1KA20A00180	20P CONNECTOR	1	
DG12	K1KA09A00077	9P CONNECTOR	1	
DG18	K1KA06A00183	6P CONNECTOR	1	
DG30	K1KA10A00317	10P CONNECTOR	1	
DG31	TJS3A9880	8P CONNECTOR	1	K1KA08A00179
DG32	K1KA07A00096	7P CONNECTOR	1	
F900-1,-2	EYF-52BC	FUSE HOLDER	2	
F901-1,-2	EYF-52BC	FUSE HOLDER	2	
F902-1,-2	EYF-52BC	FUSE HOLDER	2	
FL1000,01	ELKE103FA	NOISE FILTER	2	
FL1003	ELKE103FA	NOISE FILTER	1	
FL1015	ELKE103FA	NOISE FILTER	1	
FL1031,32	ELKE103FA	NOISE FILTER	2	
FL1046	ELKE103FA	NOISE FILTER	1	
FL1048	ELKE103FA	NOISE FILTER	1	
FL1051	ELKE103FA	NOISE FILTER	1	
FL1064	ELKE103FA	NOISE FILTER	1	
FL1072-74	ELKE103FA	NOISE FILTER	3	
FL1077	ELKE103FA	NOISE FILTER	1	
FL1090,91	ELKE103FA	NOISE FILTER	2	
FL1092-94	TSK1025	FERRITE CORE	3	J0MAB0000081

Ref. No.	Part No.	Part Name & Description	Pcs	Remarks
FL3101, 02	TLPD021	LINE FILTER	2	G1BYYYH00003
FL3772, 73	J0HABB000003	LC FILTER	2	
FL3775-77	J0HABB000004	LC FILTER	3	
FL6001	TAX10088	EMI FILTER	1	J0HAAC000010
FL6002-04	ELKE103FA	NOISE FILTER	3	
FL6007-13	TLK20LFA473M	EMI FILTER	7	J0HABB000018
FL7106	ELKE103FA	NOISE FILTER	1	
FL7207-09	ELKE103FA	NOISE FILTER	3	
G5	K1KA06B00117	6P CONNECTOR	1	
G7	K1MN28B00056	28P CONNECTOR	1	
G18	K1KA06B00049	6P CONNECTOR	1	
H1	K1KB50A00127	50P CONNECTOR	1	TH-37/42PA30H/M/R
H4	K1KB50A00127	50P CONNECTOR	1	
H9	K1KA06A00220	6P CONNECTOR	1	
H10,11	TJS6A9390	24P CONNECTOR	2	K1KA24A00041
IC300	B3L000000020	IC	1	
IC401	MIP2E1DMY1TV	IC	1	
IC402	AN1431T	LINEAR IC	1	
IC403	AN7705F	LINEAR IC	1	
IC451	C0DABZG00001	IC	1	
IC550	UPC24M18AHF	LINEAR IC	1	C0CAAME00003
IC551	C5HABZZ00123	IC	1	
IC552	C5HABZZ00080	IC	1	
IC553,54	AN1431T	LINEAR IC	2	
IC555	C0DAAHG00007	IC	1	
IC557,58	AN1431T	LINEAR IC	2	
IC920	C5HABZZ00121	IC	1	
IC921	B3PAA0000261	IC	1	⚠
IC970	AN1431M	LINEAR IC	1	
IC1001	MC14052BF	MOS IC (CMOS GATE ARRLY)	1	C0JBAR000021
IC1002	C2BBFE000138	IC	1	
IC1003	PQ07VZ012ZP	IC	1	C0DBEZG00004
IC1004	M51957BFP	LINEAR IC	1	C0EBB0000024
IC1005	C0CBCBF00001	IC	1	
IC1006	TC4066BF	MOS IC	1	C0JBAS000085
IC1007	C2CBYF000029	IC	1	
IC1008	TVRN287	IC	1	TH-37/42PA30H/M/R
IC1008	TVRN288	IC	1	TH-37PA30A
IC1009	C0JBAZ001839	IC	1	
IC1010	PST9128NR	IC (LOGIC)	1	C0EBE0000066
IC1012	C3ABPG000133	IC	1	
IC1013	TVRN291	IC	1	
IC1106	CXA1875AM	LINEAR IC	1	C0FBBD000017
IC1235	C0ZBZ0000800	IC	1	
IC1270	AN15851B	IC	1	
IC1301	C1AB00001826	IC	1	
IC1302	C1AB00001703	IC	1	
IC1303	C0JBAS000061	IC	1	
IC1304	C1AB00001707	IC	1	
IC1305	M52055FP	LINEAR IC	1	C1AB00000734
IC1306	PQ07VZ012ZP	IC	1	C0DBEZG00004
IC1308	C3ABPJ000017	IC	1	
IC1309	AN15935A-VF	IC	1	
IC1311	C0CBCAD00012	IC	1	
IC1313	TC7WU04FU	IC	1	C0JBAB000339
IC1315	C0CBCAD00012	IC	1	
IC1319	C0CBCAD00012	IC	1	
IC1321	C3ABPJ000048	IC	1	
IC1322	C0CBCAD00012	IC	1	
IC1323	AN78L09M	LINEAR IC	1	

Ref. No.	Part No.	Part Name & Description	Pcs	Remarks
IC1324	C0CBCAD00012	IC	1	
IC1325	C0CBCBD00008	IC	1	
IC1329	C0JBAZ001488	IC	1	
IC1331	C3ABPJ000048	IC	1	
IC1332, 33	C0CBCBD00006	IC	2	
IC1350	C1AB00001827	IC	1	
IC1750	C0JBAS000061	IC	1	
IC1800	C0JBAZ001488	IC	1	
IC2001	AN77L08M	IC	1	
IC2002	C1AB00001883	IC	1	
IC2003	C0DBEZE00002	IC	1	
IC2004	M51957BFP	LINEAR IC	1	C0EBB0000024
IC2200	AN17880A	IC	1	
IC2206, 07	NJM2115M	IC	2	C0ABBB000036
IC2301, 02	LA4901	IC	2	C1BA00000278
IC2304	AN7709SP	IC	1	
IC2305, 06	LA4901	IC	2	C1BA00000278
IC2401	C1BB00000800	IC	1	
IC2402, 03	NJM2904M	LINEAR IC	2	C0ABBA000021
IC2652	C2HBZE000003	IC	1	
IC2653	C0CBCAD00006	IC	1	
IC2654	C0JBAZ001834	IC	1	
IC2670	TC74LCX244F	MOS IC (CMOS S/LOGIC)	1	C0JBAZ001234
IC3003	CXA1315M	LINEAR IC	1	C1AB00000440
IC3004	CXA1875AM	LINEAR IC	1	C0FBBD000017
IC3200	CXA2069Q	LINEAR IC	1	C1AB00000459
IC3251	C1AB00001720	IC	1	
IC3290	CXA1315M	LINEAR IC	1	C1AB00000440
IC3517	AHC2G66HDCTR	INTEGRATED CIRCUIT	1	C0JBAS000109
IC3699	TVRJ969	IC	1	C3EBDC000046
IC6001	C0JBAA000244	IC	1	
IC6002	C0JBAE000231	IC	1	
IC6003	C0JBAZ002059	IC	1	
IC6004	C0DBZHE00019	IC	1	
IC6005	C0JBAB000408	IC	1	
IC6006	C0JBAZ001713	IC	1	
IC6007	C0JBAZ001590	IC	1	
IC6008, 09	C0JBAZ001120	IC	2	
IC6010	C0JBAZ002060	IC	1	
IC6011	C0CBCBD00004	IC	1	
IC6012	TVRN178-2	IC	1	
IC6013	C1AB00001816	IC	1	
IC6014	C3ABQG000069	IC	1	
IC6015	C1AB00001815	IC	1	
IC6016	C0CBCBD00008	IC	1	
IC6017	C0CBCAD00015	IC	1	⚠
IC6018	PST9128NR	IC (LOGIC)	1	C0EBE0000066
IC6401-08	C0HBC0000005	IC	8	
IC6434	TLP181	PHOTO COUPLER	1	B3PBA0000081
IC6451	AN1431M	LINEAR IC	1	
IC6452, 53	AN78L15M	LINEAR IC	2	
IC6454, 55	AN78L05M	LINEAR IC	2	
IC6456	AN1431M	LINEAR IC	1	
IC6458	TLP181	PHOTO COUPLER	1	B3PBA0000081
IC6467	TLP181	PHOTO COUPLER	1	B3PBA0000081
IC6469	TLP181	PHOTO COUPLER	1	B3PBA0000081
IC6471, 72	AN1431M	LINEAR IC	2	
IC6474	TLP181	PHOTO COUPLER	1	B3PBA0000081
IC6480	TLP181	PHOTO COUPLER	1	B3PBA0000081
IC6491	AN1431M	LINEAR IC	1	
IC6501, 02	TC74HC14AF	IC	2	C0JBAB000155
IC6503-10	K7GBZEE00006	PHOTO COUPLER	8	
IC6511	C0ZBZ0000735	IC	1	

Ref. No.	Part No.	Part Name & Description	Pcs	Remarks
IC6512	AN78L05M	LINEAR IC	1	
IC6517	TLP181	PHOTO COUPLER	1	B3PBA0000081
IC6521	C0ZBZ0000735	IC	1	
IC6541, 42	C0ZBZ0000735	IC	2	
IC6543	AN78L05M	LINEAR IC	1	
IC6581	NJM2903M	INTEGRATED CIRCUIT	1	C0BBBA000019
IC6601-03	C0ZBZ0000138	IC	3	
IC6604	AN1431M	LINEAR IC	1	
IC6605, 06	C0JBAZ000005	IC	2	
IC6607	TC74HC08AF	IC	1	C0JBAA000084
IC6701-03	C0ZBZ0000138	IC	3	
IC6704	C0ZBZ0000735	IC	1	
IC6705	NJM2903M	INTEGRATED CIRCUIT	1	C0BBBA000019
IC6706	C0JBAZ000005	IC	1	
IC6711	AN1431M	LINEAR IC	1	
IC7101	C0JBAZ001604	IC	1	
IC7104-06	C0JBAZ001604	IC	3	
IC7201-04	C0JBAZ001604	IC	4	
IC7501-05	C0DAAZG00006	IC	5	
IC7551	PQ1CZ21H2ZP	IC	1	C0DBCMG00001
IC7581	C0DBAMA00015	IC	1	
IC8002	MC14052BF	MOS IC (CMOS GATE ARRLY)	1	C0JBAR000021
IC8004	M52346SP	LINEAR IC	1	C1AA00000395
IC8006	TC74HC14AF	IC	1	C0JBAB000155
IC8008	TC4W53FEL	IC	1	C0JBAR000111
IC8009	AHC2G66HDCTR	INTEGRATED CIRCUIT	1	C0JBAS000109
IC9006, 07	C0CBCBD00008	IC	2	
IC9009	C0FBAD000069	IC	1	
IC9023	74LVC244APWL	IC	1	C0JBAZ001466
IC9151	MN845041-A	IC	1	
IC9152, 53	C0CBCBD00008	IC	2	
IC9155	C3ABPJ000017	IC	1	
IC9157	TLC2933IPWL	INTEGRATED CIRCUIT	1	C0ABFA000012
IC9301	C1ZBZ0002358	IC	1	
IC9302	C0CBCBD00008	IC	1	
IC9303	C1ZBZ0002357	IC	1	
IC9453	PQ07VZ012ZP	IC	1	C0DBEZG00004
IC9454	C3ABPJ000043	IC	1	
IC9455	MN84510-A	IC	1	
IC9456	TVRJ952-4	IC	1	C3FBMD000156
IC9459	C0JBAZ001992	IC	1	
IC9601	TC74ACT244F	INTEGRATED CIRCUIT	1	C0JBAZ000448
IC9602	74LVC244APWL	IC	1	C0JBAZ001466
IC9603, 04	TC74ACT244F	INTEGRATED CIRCUIT	2	C0JBAZ000448
IC9605	C1ZBZ0002377	IC	1	
IC9606	PST9128NR	IC (LOGIC)	1	C0EBE0000066
IC9701	MN102L230	IC	1	
IC9702	TVRN230	IC	1	C3EBJC000038
IC9703	TC74ACT244F	INTEGRATED CIRCUIT	1	C0JBAZ000448
IC9704	C3HBHG000001	IC	1	
IC9705	TVRN239	IC	1	C3FBLD000039
IC9706	74LVC244APWL	IC	1	C0JBAZ001466
IC9707	C0JBAE000239	IC	1	
IC9708	C3EBGC000018	IC	1	
IC9709	C2BBGF000491	IC	1	
IC9710	M51957BFP	LINEAR IC	1	C0EBB0000024
IC9711	AHC2G66HDCTR	INTEGRATED CIRCUIT	1	C0JBAS000109
IC9951	C0DBAMH00006	IC	1	
IC9952	C0DBAFH00021	IC	1	
JG1	K1NA68E00071	68P CONNECTOR	1	
JG2	K1NA09E00042	9P CONNECTOR	1	
JG3	K1KA20A00180	20P CONNECTOR	1	
JG5	K1YY68000007	PC CARD CONNECTOR	1	

Ref. No.	Part No.	Part Name & Description	Pcs	Remarks
JK3100A	TJB0A639	TERMINAL	1	
JK3709	K1FB315A0001	CONNECTOR	1	
JK3714	K4BK29A00006	AV TERMENAL	1	
JK7002-07	K4ZZ01000121	EARTH LUG	6	
JS001	ERJ3GEY0R00	M 0 OHM, 1/16W	1	TH-37/42PA30H/M/R
JS005	ERJ3GEY0R00	M 0 OHM, 1/16W	1	TH-37/42PA30H/M/R
JS007-09	ERJ6GEY0R00	M 0 OHM, 1/10W	3	
JS010,11	ERJ3GEY0R00	M 0 OHM, 1/16W	2	TH-37/42PA30H/M/R
JS019	ERJ6GEY0R00	M 0 OHM, 1/10W	1	
JS021-23	ERJ6GEY0R00	M 0 OHM, 1/10W	3	
JS025-32	ERJ6GEY0R00	M 0 OHM, 1/10W	8	
JS034-38	ERJ6GEY0R00	M 0 OHM, 1/10W	5	
JS040-44	ERJ6GEY0R00	M 0 OHM, 1/10W	5	
JS046-48	ERJ6GEY0R00	M 0 OHM, 1/10W	3	
JS051	ERJ6GEY0R00	M 0 OHM, 1/10W	1	
JS052	ERJ3GEY0R00	M 0 OHM, 1/16W	1	TH-37/42PA30H/M/R
JS054	ERJ6GEY0R00	M 0 OHM, 1/10W	1	
JS056-59	ERJ6GEY0R00	M 0 OHM, 1/10W	4	
JS060	ERJ3GEY0R00	M 0 OHM, 1/16W	1	TH-37/42PA30H/M/R
JS060	ERJ6GEY0R00	M 0 OHM, 1/10W	1	
JS061	ERJ3GEY0R00	M 0 OHM, 1/16W	1	TH-37/42PA30H/M/R
JS066	ERJ6GEY0R00	M 0 OHM, 1/10W	1	
JS070-74	ERJ6GEY0R00	M 0 OHM, 1/10W	5	
JS081	ERJ3GEY0R00	M 0 OHM, 1/16W	1	
JS083,84	ERJ3GEY0R00	M 0 OHM, 1/16W	2	
JS089-91	ERJ6GEY0R00	M 0 OHM, 1/10W	3	
JS100	ERJ3GEY0R00	M 0 OHM, 1/16W	1	TH-37PA30A
JS101	ERJ3GEY0R00	M 0 OHM, 1/16W	1	TH-37PA30A
JS102	ERJ3GEY0R00	M 0 OHM, 1/16W	1	TH-37PA30A
JS102-05	ERJ6GEY0R00	M 0 OHM, 1/10W	4	
JS106	ERJ3GEY0R00	M 0 OHM, 1/16W	1	TH-37PA30A
JS109	ERJ6GEY0R00	M 0 OHM, 1/10W	1	
JS110-13	ERJ3GEY0R00	M 0 OHM, 1/16W	4	
JS111	ERJ3GEY0R00	M 0 OHM, 1/16W	1	TH-37PA30A
JS112	J0JGC0000021	CHIP INDUCTOR COIL	1	TH-37PA30A
JS116-31	ERJ3GEY0R00	M 0 OHM, 1/16W	16	
JS135-43	ERJ3GEY0R00	M 0 OHM, 1/16W	9	
JS144-46	ERJ6GEY0R00	M 0 OHM, 1/10W	3	
JS150-52	ERJ3GEY0R00	M 0 OHM, 1/16W	3	
JS154	G1C121Z00004	INDUCTOR COIL	1	
JS164	ERJ3GEY0R00	M 0 OHM, 1/16W	1	
JS166	ERJ6GEY0R00	M 0 OHM, 1/10W	1	
JS168-70	ERJ3GEY0R00	M 0 OHM, 1/16W	3	
JS171	ERJ6GEY0R00	M 0 OHM, 1/10W	1	
JS172-75	ERJ3GEY0R00	M 0 OHM, 1/16W	4	

Ref. No.	Part No.	Part Name & Description	Pcs	Remarks
JS177-79	ERJ6GEY0R00	M 0 OHM, 1/10W	3	
JS182	G1C121Z00004	INDUCTOR COIL	1	
JS186	ERJ8GEY0R00	M 0 OHM, 1/8W	1	
JS192,93	ERJ8GEY0R00	M 0 OHM, 1/8W	2	
JS194	ERJ3GEY0R00	M 0 OHM, 1/16W	1	
JS207,08	ERJ6GEY0R00	M 0 OHM, 1/10W	2	
JS215,16	ERJ3GEY0R00	M 0 OHM, 1/16W	2	
JS218,19	ERJ3GEY0R00	M 0 OHM, 1/16W	2	
JS221	ERJ3GEY0R00	M 0 OHM, 1/16W	1	
JS223	ERJ3GEY0R00	M 0 OHM, 1/16W	1	
JS225-30	ERJ3GEY0R00	M 0 OHM, 1/16W	6	
JS232	ERJ3GEY0R00	M 0 OHM, 1/16W	1	
JS300,01	ERJ8GEY0R00	M 0 OHM, 1/8W	2	
JS304,05	ERJ6GEY0R00	M 0 OHM, 1/10W	2	
JS1850	ERJ3GEY0R00	M 0 OHM, 1/16W	1	
JS2002	ERJ3GEY0R00	M 0 OHM, 1/16W	1	TH-37/42PA30H/M/R
JS2014,15	ERJ3GEY0R00	M 0 OHM, 1/16W	2	
JS2022	ERJ6GEY0R00	M 0 OHM, 1/10W	1	
JS2026	ERJ3GEY0R00	M 0 OHM, 1/16W	1	
JS2103	ERJ3GEY0R00	M 0 OHM, 1/16W	1	
JS2106,07	ERJ6GEY0R00	M 0 OHM, 1/10W	2	
JS2227	ERJ6GEY0R00	M 0 OHM, 1/10W	1	
JS2303,04	ERJ6GEY0R00	M 0 OHM, 1/10W	2	
JS2638	ERJ3GEY0R00	M 0 OHM, 1/16W	1	
JS2651	ERJ3GEY0R00	M 0 OHM, 1/16W	1	
JS2657,58	ERJ3GEY0R00	M 0 OHM, 1/16W	2	
JS3100-05	ERJ6GEY0R00	M 0 OHM, 1/10W	6	
JS3107	ERJ3GEY0R00	M 0 OHM, 1/16W	1	
JS3108	ERJ6GEY0R00	M 0 OHM, 1/10W	1	
JS3110,11	ERJ6GEY0R00	M 0 OHM, 1/10W	2	
JS3112	ERJ3GEY0R00	M 0 OHM, 1/16W	1	
JS3113-15	ERJ6GEY0R00	M 0 OHM, 1/10W	3	
JS3118	ERJ3GEY0R00	M 0 OHM, 1/16W	1	
JS3120,21	ERJ6GEY0R00	M 0 OHM, 1/10W	2	
JS3132-34	ERJ6GEY0R00	M 0 OHM, 1/10W	3	
JS3137	ERJ6GEY0R00	M 0 OHM, 1/10W	1	
JS3200	ERJ3GEY0R00	M 0 OHM, 1/16W	1	
JS3201	ERJ3GEY0R00	M 0 OHM, 1/16W	1	TH-37/42PA30H/M/R
JS3202	ERJ3GEY0R00	M 0 OHM, 1/16W	1	
JS3220	J0JGC0000021	CHIP INDUCTOR COIL	1	TH-37/42PA30H/M/R
JS3234	ERJ3GEY0R00	M 0 OHM, 1/16W	1	
JS3280	J0JGC0000021	CHIP INDUCTOR COIL	1	
JS3282	ERJ3GEY0R00	M 0 OHM, 1/16W	1	TH-37PA30A
JS3284	J0JGC0000021	CHIP INDUCTOR COIL	1	TH-37PA30A
JS3705,06	ERJ8GEY0R00	M 0 OHM, 1/8W	2	
JS6009	ERJ3GEY0R00	M 0 OHM, 1/16W	1	
JS6012	ERJ3GEY0R00	M 0 OHM, 1/16W	1	
JS6018	ERJ3GEY0R00	M 0 OHM, 1/16W	1	
JS6020	ERJ3GEY0R00	M 0 OHM, 1/16W	1	
JS6022	ERJ3GEY0R00	M 0 OHM, 1/16W	1	
JS6024	ERJ3GEY0R00	M 0 OHM, 1/16W	1	
JS6026	ERJ3GEY0R00	M 0 OHM, 1/16W	1	
JS6601	ERD25V0T	M OHM, 1/10W	1	
JS6702	ERD25V0T	M OHM, 1/10W	1	

Ref. No.	Part No.	Part Name & Description	Pcs	Remarks
K12	TJSF43709	9P CONNECTOR	1	K1KA09B00048
K13	TJS6A8780	3P CONNECTOR	1	K1KA03B00006
K24	K1KA08B00005	8P CONNECTOR	1	
L003-05	G1C121Z00004	INDUCTOR COIL	3	TH-37/42PA30H/M/R
L006,07	J0JCC0000241	CHIP INDUCTOR	2	TH-37/42PA30H/M/R
L008	EXC3BB221H	BEAD CHOKE	1	TH-37/42PA30H/M/R
L010-12	J0JCC0000241	CHIP INDUCTOR	3	TH-37/42PA30H/M/R
L013	TSK1040	FERRITE CORE	1	TH-37/42PA30H/M/R
L017,18	J0JGC0000021	CHIP INDUCTOR COIL	2	TH-37/42PA30H/M/R
L051	ELJNC15NJF	CHIP COIL	1	TH-37/42PA30H/M/R
L052	G1C121Z00004	INDUCTOR COIL	1	TH-37/42PA30H/M/R
L054,55	G1C121Z00004	INDUCTOR COIL	2	TH-37/42PA30H/M/R
L056-58	J0JCC0000241	CHIP INDUCTOR	3	TH-37/42PA30H/M/R
L059	EXC3BB221H	BEAD CHOKE	1	TH-37/42PA30H/M/R
L061,62	J0JCC0000241	CHIP INDUCTOR	2	TH-37/42PA30H/M/R
L063	TSK1040	FERRITE CORE	1	TH-37/42PA30H/M/R
L066	J0JGC0000021	CHIP INDUCTOR COIL	1	TH-37/42PA30H/M/R
L067	G1C121Z00004	INDUCTOR COIL	1	TH-37/42PA30H/M/R
L080,81	ELJNC15NJF	CHIP COIL	2	TH-37PA30A
L083,84	G1C121Z00004	INDUCTOR COIL	2	TH-37PA30A
L086,87	G1C121Z00004	INDUCTOR COIL	2	TH-37PA30A
L088,89	J0JCC0000241	CHIP INDUCTOR	2	TH-37PA30A
L090	EXC3BB221H	BEAD CHOKE	1	TH-37PA30A
L091	TSK1040	FERRITE CORE	1	TH-37PA30A
L401	ELEXT100KA	PEAKING COIL	1	
L451	G4D4A0000048	SWITCHING TRANSFORMER	1	
L452	EXCELDR35C	BEAD CHOKE	1	
L554	TALFP15B221K	INDUCTION COIL	1	G0A221GA0001
L920	EXCELDR25C	BEAD CHOKE	1	
L921	EXCELSA24	BEAD CHOKE	1	
L922	EXCELDR35C	BEAD CHOKE	1	
L970	EXCELSA24	BEAD CHOKE	1	
L971	G0A100GA0013	CHOKE COIL	1	
L973	G0A100GA0013	CHOKE COIL	1	
L1000	ELJPA100KB	CHIP INDUCTOR	1	
L1003	TALC325T3R3M	CHIP INDUCTOR COIL	1	G1C3R3MA0063
L1004-06	TALC325T4R7M	CHIP INDUCTOR COIL	3	G1C4R7MA0063
L1008,09	TALC325T4R7M	CHIP INDUCTOR COIL	2	G1C4R7MA0063
L1270	J0JCC0000241	CHIP INDUCTOR	1	
L1301	G1C2R2K00006	INDUCTION COIL	1	
L1302,03	TALC168T100K	CHIP INDUCTOR COIL	2	G1C100KA0009
L1307	TALC168T5R6K	CHIP INDUCTOR COIL	1	G1C5R6K00007
L1309-16	TALC325T4R7M	CHIP INDUCTOR COIL	8	G1C4R7MA0063

Ref. No.	Part No.	Part Name & Description	Pcs	Remarks
L1317,18	TALC168T3R3K	CHIP INDUCTOR COIL	2	G1C3R3K00007
L1319,20	TALC168T6R8K	CHIP INDUCTOR COIL	2	G1C6R8K00005
L1328	G1C100KA0008	INDUCTOR COIL	1	
L1331	TALC325T4R7M	CHIP INDUCTOR COIL	1	G1C4R7MA0063
L1333-42	TALC325T4R7M	CHIP INDUCTOR COIL	10	G1C4R7MA0063
L1343,44	ELJPA100KB	CHIP INDUCTOR	2	
L1350	J0JGC0000021	CHIP INDUCTOR COIL	1	
L1352	G1C100KA0008	INDUCTOR COIL	1	
L1353,54	ERJ3GEY0R00	M 0 OHM, 1/16W	2	
L1360-62	J0JGC0000021	CHIP INDUCTOR COIL	3	
L1366,67	J0JGC0000021	CHIP INDUCTOR COIL	2	
L1600	ELJPA100KB	CHIP INDUCTOR	1	
L1650-52	J0JGC0000021	CHIP INDUCTOR COIL	3	
L1750	TALC168T5R6K	CHIP INDUCTOR COIL	1	G1C5R6K00007
L1751-53	TALC168T1R0K	CHIP INDUCTOR COIL	3	G1C1R0K00005
L1754	TALC168T5R6K	CHIP INDUCTOR COIL	1	G1C5R6K00007
L1755	ERJ3GEY0R00	M 0 OHM, 1/16W	1	
L1801	G1C100KA0008	INDUCTOR COIL	1	
L1805,06	G1C100KA0008	INDUCTOR COIL	2	
L1852-56	ELJPA100KB	CHIP INDUCTOR	5	
L2001,02	TSK1032	BEAD CHOKE	2	J0JCC0000100
L2003	EXCELDR35C	BEAD CHOKE	1	
L2006	ELESE6R8KA	PEAKING COIL	1	
L2013	EXCELDR35C	BEAD CHOKE	1	
L2023	TSK1032	BEAD CHOKE	1	J0JCC0000100
L2027-30	EXCELDR35C	BEAD CHOKE	4	
L2031	J0JCC0000241	CHIP INDUCTOR	1	
L2032	TSK1032	BEAD CHOKE	1	J0JCC0000100
L2035	J0JCC0000241	CHIP INDUCTOR	1	
L2038	TSK1032	BEAD CHOKE	1	J0JCC0000100
L2200	ELJPA470KB	CHIP INDUCTOR	1	
L2207	EXCELDR35C	BEAD CHOKE	1	
L2215	EXCELDR35C	BEAD CHOKE	1	
L2220-22	EXC3BB221H	BEAD CHOKE	3	
L2301,02	TAL10RP221LB	INDUCTION COIL	2	G0ZZ00001909
L2303,04	EXCELDR35C	BEAD CHOKE	2	
L2306	ELJPA100KB	CHIP INDUCTOR	1	
L2307,08	TAL10RP221LB	INDUCTION COIL	2	G0ZZ00001909
L2309,10	ERD25V0T	M OHM, 1/10W	2	
L2430	ERJ8GEY0R00	M 0 OHM, 1/8W	1	
L2658	ELESE4R7KA	PEAKING COIL	1	
L3100-07	EXC3BB221H	BEAD CHOKE	8	
L3108	ELESE4R7JA	PEAKING COIL	1	
L3109-11	EXC3BB221H	BEAD CHOKE	3	
L3119	ELESE6R8KA	PEAKING COIL	1	
L3120	TSKX027	CHOKE COIL	1	G0BYYYG00005
L3200	J0JCC0000241	CHIP INDUCTOR	1	
L3210	ERJ3GEY0R00	M 0 OHM, 1/16W	1	
L3767-70	G1C121Z00004	INDUCTOR COIL	4	
L3778-80	TSK1040	FERRITE CORE	3	G1BYYYH00004
L6001-06	J0JHC0000035	CHIP INDUCTOR	6	
L6008	J0JHC0000035	CHIP INDUCTOR	1	
L6009	G1C8R2K00009	INDUCTOR COIL	1	
L6010-13	J0JHC0000035	CHIP INDUCTOR	4	

Ref. No.	Part No.	Part Name & Description	Pcs	Remarks
L6451	J0JJC0000021	CHIP INDUCTOR	1	
L6453	J0JJC0000021	CHIP INDUCTOR	1	
L6471	J0JJC0000021	CHIP INDUCTOR	1	
L6472	G0ZZ00002183	PEAKING COIL	1	
L6602	G0ZZ00002183	PEAKING COIL	1	
L6604,05	G0ZZ00002183	PEAKING COIL	2	
L6611,12	ELC16BR82L	CHOKE COIL	2	
L6615,16	ELC16BR82L	CHOKE COIL	2	
L6618	J0JJC0000021	CHIP INDUCTOR	1	
L6620-28	G0ZZ00002183	PEAKING COIL	9	
L6634-38	G0ZZ00002183	PEAKING COIL	5	
L6644,45	G0ZZ00002183	PEAKING COIL	2	
L6647,48	J0JJC0000021	CHIP INDUCTOR	2	
L6702-04	G0ZZ00002183	PEAKING COIL	3	
L6705	G0C101K00023	PEAKING COIL	1	
L6711-14	ELC16BR82L	CHOKE COIL	4	
L6717,18	J0JJC0000021	CHIP INDUCTOR	2	
L6719-23	G0ZZ00002183	PEAKING COIL	5	
L6726,27	G0ZZ00002183	PEAKING COIL	2	
L6736,37	G0ZZ00002183	PEAKING COIL	2	
L6744,45	G0ZZ00002183	PEAKING COIL	2	
L6747	J0JJC0000021	CHIP INDUCTOR	1	
L6750	G0ZZ00002183	PEAKING COIL	1	
L7111-13	J0JHC0000096	CHIP INDUCTOR	3	
L7214-17	J0JHC0000096	CHIP INDUCTOR	4	
L7501	G0C101K00023	PEAKING COIL	1	
L7502	G0A101ZA0038	CHOKE COIL	1	
L7503	TALL08N330KA	INDUCTION COIL	1	G0A330GA0011
L7504	G0C101K00023	PEAKING COIL	1	
L7505	G0A101ZA0038	CHOKE COIL	1	
L7506	TALL08N330KA	INDUCTION COIL	1	G0A330GA0011
L7507	G0C101K00023	PEAKING COIL	1	
L7508	G0A101ZA0038	CHOKE COIL	1	
L7509	G0A220GA0002	CHOKE COIL	1	
L7510	G0C101K00023	PEAKING COIL	1	
L7511	G0A101ZA0038	CHOKE COIL	1	
L7512	G0A220GA0002	CHOKE COIL	1	
L7513	G0C101K00023	PEAKING COIL	1	
L7514	G0A101ZA0038	CHOKE COIL	1	
L7515	G0A220GA0002	CHOKE COIL	1	
L7551	G0C101K00023	PEAKING COIL	1	
L7552	G0A101ZA0038	CHOKE COIL	1	
L7581	TALL08N330KA	INDUCTION COIL	1	G0A330GA0011
L7582	G1C101M00018	INDUCTION COIL	1	
L9452	ELJFA1R0KF	CHIP COIL	1	
L9459	ELKE103FA	NOISE FILTER	1	
L9701	ELKE103FA	NOISE FILTER	1	
L9951-54	ELKE103FA	NOISE FILTER	4	
L9955	G1C470M00012	INDUCTOR COIL	1	
L9956	G1C1R5Z00002	INDUCTION COIL	1	
LF904	G0B123K00001	CHOKE COIL	1	⚠
LF909	G0B123K00001	CHOKE COIL	1	⚠
LF911	G0B353G00001	CHOKE COIL	1	⚠
LF915	G0B123K00001	CHOKE COIL	1	⚠
P2	K1KA06A00180	6P CONNECTOR	1	
P5	K1KA11A00073	11P CONNECTOR	1	
P7	K1KA04A00242	4P CONNECTOR	1	

Ref. No.	Part No.	Part Name & Description	Pcs	Remarks
P9	K1KA02A00244	2P CONNECTOR	1	
P10	K1KA05A00177	5P CONNECTOR	1	
P11	K1KA07A00096	7P CONNECTOR	1	
P12	K1KA05A00139	5P CONNECTOR	1	
P23	K1KA03A00213	3P CONNECTOR	1	
P25	TJS1A8840	8P CONNECTOR	1	K1KA08A00221
P27	K1KA09A00099	9P CONNECTOR	1	
PA1	K1KA05A00139	5P CONNECTOR	1	
PA2	K1KA40A00140	40P CONNECTOR	1	
PA3	K1KA04A00195	4P CONNECTOR	1	
PA4	K1KA12A00176	12P CONNECTOR	1	
PA5	K1KA11A00073	11P CONNECTOR	1	
PA6	K1KA20A00180	20P CONNECTOR	1	
PA7	K1KA04A00242	4P CONNECTOR	1	
PA8	K1KA20A00180	20P CONNECTOR	1	
PA10A	TJS3A9890	9P CONNECTOR	1	K1KA09A00074
PA12	K1KA07A00056	7P CONNECTOR	1	
PA17	K1KA04A00242	4P CONNECTOR	1	
PA21	K1KA07A00056	7P CONNECTOR	1	
PA22	K1KA12A00176	12P CONNECTOR	1	
PA23	TJS3A9880	8P CONNECTOR	1	K1KA08A00179
PA24	K1KA07A00096	7P CONNECTOR	1	
PA25	K1KA04A00242	4P CONNECTOR	1	
PF1,F2	K1KA03A00181	3P CONNECTOR	2	
PF10	TJS118660	9P CONNECTOR	1	K1KA09A00073
Q002,03	2SB709A	TRANSISTOR	2	TH-37/42PA30H/M/R
Q052,53	2SB709A	TRANSISTOR	2	TH-37/42PA30H/M/R
Q080	2SB709A	TRANSISTOR	1	TH-37PA30A
Q082	2SB709A	TRANSISTOR	1	TH-37PA30A
Q300,01	2SC2412K	TRANSISTOR	2	
Q305	2SD601A	TRANSISTOR	1	2SD0601A
Q401-04	2SC3311A	TRANSISTOR	4	2SC3311AW
Q405	B1CBGD000001	TRANSISTOR	1	
Q406	2SC3311A	TRANSISTOR	1	2SC3311AW
Q451	B1DEGR000021	TRANSISTOR	1	
Q452	2SD2177R	TRANSISTOR	1	
Q453	2SB1434R	TRANSISTOR	1	2SB14340RA
Q454	B1DEGR000021	TRANSISTOR	1	
Q455,56	2SC3311A	TRANSISTOR	2	2SC3311AW
Q457	2SA1309A	TRANSISTOR	1	2SA13090WA
Q552	B1DEGQ000019	FET	1	
Q553	2SB621A	TRANSISTOR	1	2SB0621AW
Q554,55	2SC3311A	TRANSISTOR	2	2SC3311AW
Q557,58	2SC3311A	TRANSISTOR	2	2SC3311AW
Q650,51	2SC3311A	TRANSISTOR	2	2SC3311AW
Q990	2SD13280TL	TRANSISTOR	1	
Q1000	2SB709A	TRANSISTOR	1	2SB0709A
Q1001,02	2SD601A	TRANSISTOR	2	2SD0601A
Q1004	2SD601A	TRANSISTOR	1	2SD0601A
Q1007	2SD601A	TRANSISTOR	1	2SD0601A
Q1010	2SD601A	TRANSISTOR	1	2SD0601A
Q1012-19	2SD601A	TRANSISTOR	8	2SD0601A
Q1024-26	2SD601A	TRANSISTOR	3	2SD0601A
Q1225	2SB709A	TRANSISTOR	1	2SB0709A
Q1230	2SB709A	TRANSISTOR	1	2SB0709A
Q1233	2SD601A	TRANSISTOR	1	2SD0601A
Q1254,55	2SD601A	TRANSISTOR	2	2SD0601A
Q1302-04	2SD601A	TRANSISTOR	3	2SD0601A
Q1310-12	2SD601A	TRANSISTOR	3	2SD0601A
Q1315-17	2SD601A	TRANSISTOR	3	2SD0601A

Ref. No.	Part No.	Part Name & Description	Pcs	Remarks
Q1320,21	2SD601A	TRANSISTOR	2	2SD0601A
Q1325,26	2SD601A	TRANSISTOR	2	2SD0601A
Q1327	2SD1030	TRANSISTOR	1	
Q1330	XN6501	TRANSISTOR	1	XN06501
Q1334,35	2SD601A	TRANSISTOR	2	2SD0601A
Q1336,37	2SB709A	TRANSISTOR	2	2SB0709A
Q1340	2SB709A	TRANSISTOR	1	2SB0709A
Q1342,43	2SB709A	TRANSISTOR	2	2SB0709A
Q1351	2SK198R	FET	1	2SK01980R
Q1355	2SB709A	TRANSISTOR	1	2SB0709A
Q1359-61	2SB709A	TRANSISTOR	3	2SB0709A
Q1363	2SB709A	TRANSISTOR	1	2SB0709A
Q1600-02	2SD601A	TRANSISTOR	3	2SD0601A
Q1750-53	2SD601A	TRANSISTOR	4	2SD0601A
Q1754	UN2215	TRANSISTOR	1	UNR2215
Q1755	2SB709A	TRANSISTOR	1	2SB0709A
Q1756	2SD601A	TRANSISTOR	1	2SD0601A
Q1757	XN6501	TRANSISTOR	1	XN06501
Q1758	2SD601A	TRANSISTOR	1	2SD0601A
Q1759	2SB709A	TRANSISTOR	1	2SB0709A
Q1760	2SD601A	TRANSISTOR	1	2SD0601A
Q1761,62	2SB709A	TRANSISTOR	2	2SB0709A
Q1763	2SD601A	TRANSISTOR	1	2SD0601A
Q1764,65	2SD1030	TRANSISTOR	2	
Q1800	UN2215	TRANSISTOR	1	UNR2215
Q1850,51	2SD601A	TRANSISTOR	2	2SD0601A
Q2003,04	2SB709A	TRANSISTOR	2	2SB0709A
Q2006-08	2SD601A	TRANSISTOR	3	TH-37PA30A
Q2012	2SD601A	TRANSISTOR	1	TH-37PA30A
Q2202	2SD601A	TRANSISTOR	1	2SD0601A
Q2203,04	2SB709A	TRANSISTOR	2	2SB0709A
Q2301,02	2SD1266A	TRANSISTOR	2	2SD1266AJ
Q2303-06	2SD601A	TRANSISTOR	4	2SD0601A
Q2308,09	2SD601A	TRANSISTOR	2	2SD0601A
Q2311	2SD601A	TRANSISTOR	1	2SD0601A
Q2313,14	2SD1802ST	TRANSISTOR	2	B1BBCF000013
Q3100	2SB709A	TRANSISTOR	1	2SB0709A
Q3101,02	2SD601A	TRANSISTOR	2	2SD0601A
Q3170-75	2SD601A	TRANSISTOR	6	2SD0601A
Q3202	2SB709A	TRANSISTOR	1	TH-37/42PA30H/M/R
Q3203	2SB709A	TRANSISTOR	1	
Q3208-11	2SB709A	TRANSISTOR	4	2SB0709A
Q3214	2SB709A	TRANSISTOR	1	2SB0709A
Q3220-23	UN5211	TRANSISTOR	4	TH-37/42PA30H/M/R
Q6001	2SA207700L	TRANSISTOR	1	
Q6003	2SA207700L	TRANSISTOR	1	
Q6005,06	2SC584500L	TRANSISTOR	2	
Q6008	2SA207700L	TRANSISTOR	1	
Q6010	2SA207700L	TRANSISTOR	1	
Q6401	2SK620	FET	1	2SK0620
Q6451	B1BBCJ000003	TRANSISTOR	1	
Q6452	2SB0709A	TRANSISTOR	1	

Ref. No.	Part No.	Part Name & Description	Pcs	Remarks
Q6454	2SD814A	TRANSISTOR	1	
Q6455	2SD601A	TRANSISTOR	1	2SD0601A
Q6461	B1BBCJ000003	TRANSISTOR	1	
Q6462	2SB0709A	TRANSISTOR	1	
Q6463	2SD601A	TRANSISTOR	1	2SD0601A
Q6471	B1BBCJ000003	TRANSISTOR	1	
Q6472	2SB0709A	TRANSISTOR	1	
Q6474	2SD814A	TRANSISTOR	1	
Q6475-77	2SD601A	TRANSISTOR	3	2SD0601A
Q6491	2SD1263A	TRANSISTOR	1	
Q6492	2SC1473A	TRANSISTOR	1	2SC1473AE
Q6501-04	2SK620	FET	4	2SK0620
Q6511,12	B1DFGL000005	TRANSISTOR	2	
Q6520	2SD601A	TRANSISTOR	1	2SD0601A
Q6521	B1DFES000001	TRANSISTOR	1	
Q6522-27	2SK2993	FET	6	
Q6530	2SB1073001TV	TRANSISTOR	1	
Q6541	2SB1073001TV	TRANSISTOR	1	
Q6542-47	2SK373100L	TRANSISTOR	6	
Q6550	2SC1473A	TRANSISTOR	1	2SC1473AE
Q6551	2SD601A	TRANSISTOR	1	2SD0601A
Q6552	B1DFES000001	TRANSISTOR	1	
Q6553	2SB1073001TV	TRANSISTOR	1	
Q6554	2SD2185	TRANSISTOR	1	
Q6555	B1DFES000001	TRANSISTOR	1	
Q6581	2SD601A	TRANSISTOR	1	2SD0601A
Q6601,02	2SK3795000SB	TRANSISTOR	2	
Q6603,04	2SK620	FET	2	2SK0620
Q6605,06	2SK3795000SB	TRANSISTOR	2	
Q6611	2SD2185	TRANSISTOR	1	
Q6612	2SB1073001TV	TRANSISTOR	1	
Q6613	2SD2185	TRANSISTOR	1	
Q6614	2SB1073001TV	TRANSISTOR	1	
Q6621	2SK3637000VE	TRANSISTOR	1	
Q6624	2SK3637000VE	TRANSISTOR	1	
Q6641,42	B1DFHM000002	TRANSISTOR	2	
Q6671	2SB940A	TRANSISTOR	1	2SB0940AJ
Q6672	2SC1473A	TRANSISTOR	1	2SC1473AE
Q6673	2SD1263A	TRANSISTOR	1	
Q6701,02	2SK3795000SB	TRANSISTOR	2	
Q6705,06	2SK3795000SB	TRANSISTOR	2	
Q6711	2SD2185	TRANSISTOR	1	
Q6712	2SB1073001TV	TRANSISTOR	1	
Q6713	2SD2185	TRANSISTOR	1	
Q6714	2SB1073001TV	TRANSISTOR	1	
Q6721	2SK3637000VE	TRANSISTOR	1	
Q6724	2SK3637000VE	TRANSISTOR	1	
Q6725	2SK620	FET	1	2SK0620
Q6741,42	B1DFHM000002	TRANSISTOR	2	
Q6745,46	2SK326800L	FET	2	
Q6751	2SD1263A	TRANSISTOR	1	
Q6752,53	2SC1473	TRANSISTOR	2	2SC14730E
Q6756	2SD601A	TRANSISTOR	1	2SD0601A
Q7201,02	2SB709A	TRANSISTOR	2	2SB0709A
Q7501	B1DHDD000012	TRANSISTOR	1	
Q7502	UN2214	TRANSISTOR	1	UNR2214
Q7503	B1DHDD000012	TRANSISTOR	1	
Q7504,05	UN2214	TRANSISTOR	2	UNR2214
Q7506	B1DHDD000012	TRANSISTOR	1	
Q7507	UN5211	TRANSISTOR	1	UNR5211

Ref. No.	Part No.	Part Name & Description	Pcs	Remarks
Q7509	2SD601A	TRANSISTOR	1	2SD0601A
Q7510	UN2214	TRANSISTOR	1	UNR2214
Q7541-43	2SB709A	TRANSISTOR	3	2SB0709A
Q7544	2SD601A	TRANSISTOR	1	2SD0601A
Q7552,53	UN221N	TRANSISTOR	2	
Q7581	UN5211	TRANSISTOR	1	UNR5211
Q7582	B1ABPF000005	TRANSISTOR	1	
Q9301	2SD601A	TRANSISTOR	1	2SD0601A
Q9400	2SD601A	TRANSISTOR	1	2SD0601A
Q9596-99	2SD601A	TRANSISTOR	4	2SD0601A
Q9601,02	2SD601A	TRANSISTOR	2	2SD0601A
Q9701	2SD601A	TRANSISTOR	1	2SD0601A
Q9702	2SB1440	TRANSISTOR	1	2SB14400H
Q9703,04	2SK620	FET	2	2SK0620
Q9706	2SK620	FET	1	2SK0620
Q9707	2SB709A	TRANSISTOR	1	2SB0709A
Q9708,09	2SD601A	TRANSISTOR	2	2SD0601A
Q9710	2SB709A	TRANSISTOR	1	2SB0709A
Q9714-16	2SD601A	TRANSISTOR	3	2SD0601A
Q9719	2SK620	FET	1	2SK0620
R002	ERJ3GEYJ221	M 220 OHM,J,1/16W	1	TH-37/42PA30H/M/R
R003	ERJ3GEY0R00	M 0 OHM, 1/16W	1	TH-37/42PA30H/M/R
R005	ERJ6GEYJ561	M 560 OHM,J,1/10W	1	TH-37/42PA30H/M/R
R006	ERJ6GEYJ472	M 4.7KOHM,J,1/10W	1	TH-37/42PA30H/M/R
R007	ERJ6GEY0R00	M 0 OHM, 1/10W	1	TH-37/42PA30H/M/R
R008,09	ERJ3GEYJ102	M 1KOHM,J,1/16W	2	TH-37/42PA30H/M/R
R052	ERJ3GEYJ221	M 220 OHM,J,1/16W	1	TH-37/42PA30H/M/R
R053	ERJ3GEY0R00	M 0 OHM, 1/16W	1	TH-37/42PA30H/M/R
R055	ERJ6GEYJ561	M 560 OHM,J,1/10W	1	TH-37/42PA30H/M/R
R056	ERJ6GEYJ472	M 4.7KOHM,J,1/10W	1	TH-37/42PA30H/M/R
R057	ERJ6GEY0R00	M 0 OHM, 1/10W	1	TH-37/42PA30H/M/R
R058,59	ERJ3GEYJ102	M 1KOHM,J,1/16W	2	TH-37/42PA30H/M/R
R080	ERJ3GEYJ221	M 220 OHM,J,1/16W	1	TH-37PA30A
R081	ERJ3GEYJ153	M 15KOHM,J,1/16W	1	TH-37PA30A
R083	ERJ3GEYJ472	M 4.7KOHM,J,1/16W	1	TH-37PA30A
R084	ERJ6GEYJ331	M 330 OHM,J,1/10W	1	TH-37PA30A
R085	ERJ6GEY0R00	M 0 OHM, 1/10W	1	TH-37PA30A
R087	ERJ3GEY0R00	M 0 OHM, 1/16W	1	TH-37PA30A
R089	ERJ6GEYJ331	M 330 OHM,J,1/10W	1	TH-37PA30A
R300	ERJ6GEYJ562	M 5.6KOHM,J,1/10W	1	
R301	ERJ6GEYJ223	M 22KOHM,J,1/10W	1	
R302	ERJ6GEYJ471	M 470 OHM,J,1/10W	1	
R304	ERJ6GEYJ223	M 22KOHM,J,1/10W	1	
R306	ERJ6GEYJ102	M 1KOHM,J,1/10W	1	
R307	ERJ6GEYJ470	M 47 OHM,J,1/10W	1	
R310	ERJ6GEYJ470	M 47 OHM,J,1/10W	1	
R311	ERJ6GEYJ224	M 220KOHM,J,1/10W	1	

Ref. No.	Part No.	Part Name & Description	Pcs	Remarks
R312	ERJ6GEY0R00	M 0 OHM, 1/10W	1	
R313	ERJ6GEYJ102	M 1KOHM,J,1/10W	1	
R314	ERJ6GEYJ470	M 47 OHM,J,1/10W	1	
R317	ERJ6GEYJ562	M 5.6KOHM,J,1/10W	1	
R402	ERF10TK3R3	W 3.3 OHM, 10W	1	
R404	ERF10TK3R3	W 3.3 OHM, 10W	1	
R406	ERU5TAJ150	F 15 OHM, 5W	1	⚠
R407	ERJ6GEY0R00	M 0 OHM, 1/10W	1	
R408	ERJ6GEYJ6R8	M 6.8 OHM,J,1/10W	1	
R409	ERG1FJS104D	M 100KOHM, J, 1W	1	
R410	ERJ6GEYJ6R8	M 6.8 OHM,J,1/10W	1	
R411	ERDS1FJ101	C 100 OHM, J,1/2W	1	
R412	ERDS1FJ221	C 220 OHM, J,1/2W	1	
R413	ERJ6GEYJ103	M 10KOHM,J,1/10W	1	
R414	ERJ6GEYJ473	M 47KOHM,J,1/10W	1	
R415	ERJ6ENF3901	M 3.9KOHM, 1/10W	1	
R416	ERJ6ENF2551	M2.55KOHM, 1/10W	1	
R417	ERJ6GEYJ104	M 100KOHM,J,1/10W	1	
R418	ERJ6GEY0R00	M 0 OHM, 1/10W	1	
R420-22	ERJ6GEYJ103	M 10KOHM,J,1/10W	3	
R423	ERJ6GEYJ223	M 22KOHM,J,1/10W	1	
R424,25	ERJ6GEYJ473	M 47KOHM,J,1/10W	2	
R426,27	ERJ6GEYJ472	M 4.7KOHM,J,1/10W	2	
R428	ERJ6GEYJ223	M 22KOHM,J,1/10W	1	
R429-31	ERJ6ENF3303	M 330KOHM, 1/10W	3	
R432	ERJ6ENF1003	M 100KOHM, 1/10W	1	
R433-35	ERJ6ENF3303	M 330KOHM, 1/10W	3	
R436	ERJ6ENF1202	M 12KOHM, 1/10W	1	
R451	ERDS1FJ274	C 270KOHM, J,1/2W	1	
R452	ERDS1FJ224	C 220KOHM, J,1/2W	1	
R453	ERJ6GEYJ272	M 2.7KOHM,J,1/10W	1	
R454,55	ERG3FJS333D	M 33KOHM, J, 3W	2	
R456	ERDS1FJ2R7	C 2.7 OHM, J,1/2W	1	
R457,58	ERF5EKR15	W0.15 OHM, 5W	2	
R459	ERJ6GEYJ270	M 27 OHM,J,1/10W	1	
R460	ERJ6GEYJ103	M 10KOHM,J,1/10W	1	
R461	ERJ6GEYF563	M 56KOHM,F,1/10W	1	
R462	ERG1FJS101D	M 100 OHM, J, 1W	1	
R463	ERDS1FJ220	C 22 OHM, J,1/2W	1	
R464	ERDS1FJ103	C 10KOHM, J,1/2W	1	
R465	ERJ6GEYJ104	M 100KOHM,J,1/10W	1	
R466	ERJ6ENF2703	M 270KOHM, 1/10W	1	
R467	ERDS1FJ220	C 22 OHM, J,1/2W	1	
R468	ERDS1FJ103	C 10KOHM, J,1/2W	1	
R469	ERDS1FJ221	C 220 OHM, J,1/2W	1	
R470	ERJ6ENF5602	M 56KOHM, 1/10W	1	
R471	ERJ6GEY0R00	M 0 OHM, 1/10W	1	
R472-74	ERJ6ENF3303	M 330KOHM, 1/10W	3	
R476	ERJ6ENF3601	M 3.6KOHM, 1/10W	1	
R477	ERJ6ENF4020	M 402 OHM, 1/10W	1	
R478-80	ERJ6ENF3303	M 330KOHM, 1/10W	3	
R481	ERJ6ENF3301	M 3.3KOHM, 1/10W	1	
R482	ERJ6ENF4220	M 422 OHM, 1/10W	1	
R483	ERG2FJS104D	M 100KOHM, J, 2W	1	
R484	ERJ6GEYJ562	M 5.6KOHM,J,1/10W	1	
R485	ERG1FJS393D	M 39KOHM, J, 3W	1	
R486	ERJ6GEYJ333	M 33KOHM,J,1/10W	1	
R487	ERJ6GEYJ101	M 100 OHM,J,1/10W	1	
R488	ERJ6GEYJ473	M 47KOHM,J,1/10W	1	
R489	ERJ6GEYJ153	M 15KOHM,J,1/10W	1	
R490	ERJ6GEYJ272	M 2.7KOHM,J,1/10W	1	
R491,92	ERJ6GEYJ223	M 22KOHM,J,1/10W	2	
R493	ERJ6GEYJ222	M 2.2KOHM,J,1/10W	1	
R502,03	ERJ6GEYJ562	M 5.6KOHM,J,1/10W	2	
R504	ERJ6GEYJ103	M 10KOHM,J,1/10W	1	
R550	ERX1FJSR56D	M0.56 OHM, J, 1W	1	
R551	ERG2FJS104D	M 100KOHM, J, 2W	1	
R552	ER0S2CKF1053	M 105KOHM, F,1/4W	1	EROS2CKF1053
R553	ERG2FJS104D	M 100KOHM, J, 2W	1	
R554	ER0S2CKF1053	M 105KOHM, F,1/4W	1	EROS2CKF1053
R555	ERJ6ENF2491	M2.49KOHM, 1/10W	1	
R556	ERJ6GEYJ123	M 12KOHM,J,1/10W	1	
R557,58	ERJ6GEYJ332	M 3.3KOHM,J,1/10W	2	

Ref. No.	Part No.	Part Name & Description	Pcs	Remarks
R560	ERX1FJSR56D	M0.56 OHM, J, 1W	1	
R561	ERJ6ENF1212	M12.1KOHM, 1/10W	1	
R563	ERG3FJS683D	M 68KOHM, J, 3W	1	
R564,65	ERJ6GEYJ681	M 680 OHM,J,1/10W	2	
R568	ERX1FJSR56D	M0.56 OHM, J, 1W	1	
R569	ERX2FJSR47D	M 0.47OHM, J, 2W	1	
R571	ERJ6GEY0R00	M 0 OHM, 1/10W	1	
R572	ERG3FJS683D	M 68KOHM, J, 3W	1	
R573	ERJ6GEYJ222	M 2.2KOHM,J,1/10W	1	
R574	ERX1FJSR56D	M0.56 OHM, J, 1W	1	
R575	ERJ6GEYJ222	M 2.2KOHM,J,1/10W	1	
R576	ERX2FJSR47D	M 0.47OHM, J, 2W	1	
R577,78	ERG3FJS683D	M 68KOHM, J, 3W	2	
R579,80	ERDS1FJ220	C 22 OHM, J,1/2W	2	
R581,82	ERJ6GEYJ102	M 1KOHM,J,1/10W	2	
R583,84	ERJ6GEYJ222	M 2.2KOHM,J,1/10W	2	
R585,86	ERJ6GEYJ101	M 100 OHM,J,1/10W	2	
R587	ERDS1FJ220	C 22 OHM, J,1/2W	1	
R588	ERJ6GEYJ473	M 47KOHM,J,1/10W	1	
R589	ERJ6ENF4992	M49.9KOHM, 1/10W	1	
R590	EVMEASA00B14	CONTROL 10KOHMB 0.3W	1	
R591	ERJ6GEYJ473	M 47KOHM,J,1/10W	1	
R592	ERG1FJS222D	M 2.2KOHM, J, 1W	1	
R593	ERJ6GEYJ104	M 100KOHM,J,1/10W	1	
R594	ERDS1FJ220	C 22 OHM, J,1/2W	1	
R595	ERDS1FJ471	C 470 OHM, J,1/2W	1	
R596	ERJ6GEYJ682	M 6.8KOHM,J,1/10W	1	
R597,98	ERDS1FJ224	C 220KOHM, J,1/2W	2	
R599	ERJ6GEYJ472	M 4.7KOHM,J,1/10W	1	
R600	ERDS1FJ224	C 220KOHM, J,1/2W	1	
R601	ERJ6GEYJ682	M 6.8KOHM,J,1/10W	1	
R602	ERJ6ENF4642	M46.4KOHM, 1/10W	1	
R603,04	ERJ6ENF4992	M49.9KOHM, 1/10W	2	
R605	EVMEASA00B54	CONTROL 50KOHMB 0.3W	1	
R606	ERJ6ENF2551	M2.55KOHM, 1/10W	1	
R607	ERJ6GEYJ151	M 150 OHM,J,1/10W	1	
R608	ERJ6GEYJ682	M 6.8KOHM,J,1/10W	1	
R609	ERJ6ENF1212	M12.1KOHM, 1/10W	1	
R610	ERJ6ENF3301	M 3.3KOHM, 1/10W	1	
R611	ERJ6ENF1501	M 1.5KOHM, 1/10W	1	
R612	ERJ6ENF2551	M2.55KOHM, 1/10W	1	
R613	ERJ6GEYJ103	M 10KOHM,J,1/10W	1	
R614	ERJ6GEYJ472	M 4.7KOHM,J,1/10W	1	
R615,16	ERJ6GEYJ102	M 1KOHM,J,1/10W	2	
R617	ERJ6GEYJ103	M 10KOHM,J,1/10W	1	
R618	ERJ6GEYJ680	M 68 OHM,J,1/10W	1	
R619	ERJ12YJ472	M 4.7KOHM,J, 1/2W	1	
R620	ERJ6GEYJ680	M 68 OHM,J,1/10W	1	
R621	ERJ12YJ472	M 4.7KOHM,J, 1/2W	1	
R623	ERJ6GEYJ103	M 10KOHM,J,1/10W	1	
R625,26	ERJ6GEYJ103	M 10KOHM,J,1/10W	2	
R627	ERJ6GEYJ473	M 47KOHM,J,1/10W	1	
R628	ERDS1FJ470	C 47 OHM, J,1/2W	1	
R630	ERJ6GEYJ472	M 4.7KOHM,J,1/10W	1	
R631	ERJ6GEYJ104	M 100KOHM,J,1/10W	1	
R635	ERJ6ENF2551	M2.55KOHM, 1/10W	1	
R650	ERG1FJS222D	M 2.2KOHM, J, 1W	1	
R652	ERDS1FJ220	C 22 OHM, J,1/2W	1	
R653	ERJ6GEYJ473	M 47KOHM,J,1/10W	1	
R654	ERJ6GEYJ560	M 56 OHM,J,1/10W	1	
R655	ERDS1FJ472	C 4.7KOHM, J,1/2W	1	
R656,57	ERJ6GEYJ222	M 2.2KOHM,J,1/10W	2	
R901,02	ERC12ZGK105	S 1MOHM, K,1/2W	2	⚠
R904	ERF7ZK3R3	W 3.3 OHM, K, 7W	1	
R920,21	ERG1FJS104D	M 100KOHM, J, 1W	2	
R922	ERDS2TJ224	C 220KOHM, J,1/4W	1	
R923	ERG2FJS100D	M 10 OHM, J, 2W	1	
R924	ERDS1FJ3R3	C 3.3 OHM, J,1/2W	1	
R927	ERJ6GEYJ561	M 560 OHM,J,1/10W	1	
R928	ERJ6GEYJ471	M 470 OHM,J,1/10W	1	
R931	ERX12SJR68	M0.68 OHM, J,1/2W	1	

Ref. No.	Part No.	Part Name & Description	Pcs	Remarks
R932	ERX12SJR82	M0.82 OHM, J,1/2W	1	
R933	ERDS1FJ181	C 180 OHM, J,1/2W	1	
R934	ERJ6GEYJ151	M 150 OHM,J,1/10W	1	
R935	ERJ6GEYJ102	M 1KOHM,J,1/10W	1	
R936	ERJ6GEYJ223	M 22KOHM,J,1/10W	1	
R938	ERJ6GEYJ104	M 100KOHM,J,1/10W	1	
R939	ERX12SJR82	M0.82 OHM, J,1/2W	1	
R940	ERJ6GEYJ101	M 100 OHM,J,1/10W	1	
R970	ERJ6GEYJ681	M 680 OHM,J,1/10W	1	
R971	ERJ6GEYJ471	M 470 OHM,J,1/10W	1	
R972	ERJ6GEYJ101	M 100 OHM,J,1/10W	1	
R973	ERJ6GEYJ222	M 2.2KOHM,J,1/10W	1	
R974	ERJ6ENF1692	M16.9KOHM, 1/10W	1	
R975	ERJ6ENF2321	M2.32KOHM, 1/10W	1	
R990	ERJ6GEYJ332	M 3.3KOHM,J,1/10W	1	
R992	ERJ6GEYJ473	M 47KOHM,J,1/10W	1	
R993,94	ERJ6GEY0R00	M 0 OHM, 1/10W	2	
R1000	ERJ3GEYJ473	M 47KOHM,J,1/16W	1	
R1005	ERJ3GEYJ103	M 10KOHM,J,1/16W	1	
R1013	ERJ3GEYJ562	M 5.6KOHM,J,1/16W	1	
R1015	ERJ3GEYJ332	M 3.3KOHM,J,1/16W	1	
R1016,17	ERJ3GEY0R00	M 0 OHM, 1/16W	2	
R1018	ERJ3GEYJ224	M 220KOHM,J,1/16W	1	
R1019	ERJ3GEY0R00	M 0 OHM, 1/16W	1	
R1022	ERJ3GEYJ273	M 27KOHM,J,1/16W	1	
R1023	ERJ3GEY0R00	M 0 OHM, 1/16W	1	
R1025	ERJ3GEY0R00	M 0 OHM, 1/16W	1	
R1027	ERJ3GEYJ222	M 2.2KOHM,J,1/16W	1	
R1028	ERJ3GEYJ472	M 4.7KOHM,J,1/16W	1	
R1030	ERJ3GEYJ331	M 330 OHM,J,1/16W	1	
R1031	ERJ3GEYJ102	M 1KOHM,J,1/16W	1	
R1032	ERJ3GEYJ222	M 2.2KOHM,J,1/16W	1	
R1033,34	ERJ3GEYJ103	M 10KOHM,J,1/16W	2	
R1037	ERJ3GEYJ103	M 10KOHM,J,1/16W	1	
R1038,39	ERJ3GEYJ220	M 22 OHM,J,1/16W	2	
R1040	ERJ3GEY0R00	M 0 OHM, 1/16W	1	
R1043-48	ERJ3GEYJ103	M 10KOHM,J,1/16W	6	
R1049	ERJ3GEYJ332	M 3.3KOHM,J,1/16W	1	
R1051	ERJ3GEYJ332	M 3.3KOHM,J,1/16W	1	
R1052,53	ERJ3GEYJ103	M 10KOHM,J,1/16W	2	
R1054	ERJ3GEYJ473	M 47KOHM,J,1/16W	1	
R1055-57	ERJ3GEYJ103	M 10KOHM,J,1/16W	3	
R1058,59	ERJ3GEY0R00	M 0 OHM, 1/16W	2	
R1063	ERJ3GEYJ103	M 10KOHM,J,1/16W	1	
R1065,66	ERJ3EKF3901	M 3.9KOHM, 1/16W	2	
R1067	ERJ3GEYJ223	M 22KOHM,J,1/16W	1	
R1068	ERJ3GEYJ472	M 4.7KOHM,J,1/16W	1	
R1069	ERJ3GEYJ105	M 1MOHM,J,1/16W	1	
R1070	ERJ3GEYJ102	M 1KOHM,J,1/16W	1	
R1071,72	ERJ3GEYJ103	M 10KOHM,J,1/16W	2	
R1073	ERJ3GEY0R00	M 0 OHM, 1/16W	1	
R1075	ERJ3GEYJ102	M 1KOHM,J,1/16W	1	
R1079	ERJ3GEYJ472	M 4.7KOHM,J,1/16W	1	
R1081	ERJ3GEYJ473	M 47KOHM,J,1/16W	1	
R1082	ERJ3GEYJ223	M 22KOHM,J,1/16W	1	
R1083	ERJ3GEY0R00	M 0 OHM, 1/16W	1	
R1086	ERJ3GEYJ821	M 820 OHM,J,1/16W	1	
R1090	TAJAAH0101JV	M 100 OHM,J,1/16W	1	D0GB101JA006
R1091	ERJ3GEYJ391	M 390 OHM,J,1/16W	1	D0GB391JA002
R1092	ERJ3GEYJ103	M 10KOHM,J,1/16W	1	
R1093	ERJ3GEYJ471	M 470 OHM,J,1/16W	1	
R1095	ERJ3GEYJ473	M 47KOHM,J,1/16W	1	
R1099,00	EXB38V680J	RESISTOR ARRAY	2	
R1101	TAJAAH0101JV	M 100 OHM,J,1/16W	1	D0GB101JA006
R1102	EXB38V680J	RESISTOR ARRAY	1	

Ref. No.	Part No.	Part Name & Description	Pcs	Remarks
R1105	ERJ3GEYJ225	M 2.2MOHM,J,1/16W	1	
R1107	ERJ3GEY0R00	M 0 OHM, 1/16W	1	
R1108	TAJAAH0101JV	M 100 OHM,J,1/16W	1	D0GB101JA006
R1109	ERJ3GEY0R00	M 0 OHM, 1/16W	1	
R1110	TAJAAH0101JV	M 100 OHM,J,1/16W	1	D0GB101JA006
R1111	ERJ3GEYJ560	M 56 OHM,J,1/16W	1	
R1112,13	ERJ3GEYJ102	M 1KOHM,J,1/16W	2	
R1114	TAJAAH0101JV	M 100 OHM,J,1/16W	1	D0GB101JA006
R1115	ERJ3GEYJ472	M 4.7KOHM,J,1/16W	1	
R1117	ERJ3GEYJ473	M 47KOHM,J,1/16W	1	
R1119,20	ERJ3GEYJ563	M 56KOHM,J,1/16W	2	
R1124	ERJ3GEYJ103	M 10KOHM,J,1/16W	1	
R1125	EXB38V680J	RESISTOR ARRAY	1	
R1126	ERJ3GEYJ273	M 27KOHM,J,1/16W	1	
R1127	ERJ3GEYJ223	M 22KOHM,J,1/16W	1	
R1128	TAJAAH0101JV	M 100 OHM,J,1/16W	1	D0GB101JA006
R1129	ERJ3GEY0R00	M 0 OHM, 1/16W	1	
R1130	EXB38V680J	RESISTOR ARRAY	1	
R1131	ERJ3GEYJ104	M 100KOHM,J,1/16W	1	
R1132	ERJ3GEYJ220	M 22 OHM,J,1/16W	1	
R1133	ERJ3GEYJ104	M 100KOHM,J,1/16W	1	
R1134	EXB38V680J	RESISTOR ARRAY	1	
R1135	ERJ3GEYJ224	M 220KOHM,J,1/16W	1	
R1136	ERJ3GEYJ221	M 220 OHM,J,1/16W	1	
R1137	EXB38V680J	RESISTOR ARRAY	1	
R1138	TAJAAH0101JV	M 100 OHM,J,1/16W	1	D0GB101JA006
R1139	ERJ3GEYJ273	M 27KOHM,J,1/16W	1	
R1140	EXB38V680J	RESISTOR ARRAY	1	
R1141	ERJ3GEYJ820	M 82 OHM,J,1/16W	1	
R1142	TAJAAH0101JV	M 100 OHM,J,1/16W	1	D0GB101JA006
R1143	ERJ3GEY0R00	M 0 OHM, 1/16W	1	
R1145,46	TAJAAH0101JV	M 100 OHM,J,1/16W	2	D0GB101JA006
R1147	EXB38V680J	RESISTOR ARRAY	1	
R1148-51	TAJAAH0101JV	M 100 OHM,J,1/16W	4	D0GB101JA006
R1152	ERJ3GEYJ472	M 4.7KOHM,J,1/16W	1	
R1153-55	TAJAAH0101JV	M 100 OHM,J,1/16W	3	D0GB101JA006
R1156	ERJ3GEY0R00	M 0 OHM, 1/16W	1	
R1157	ERJ3GEYJ223	M 22KOHM,J,1/16W	1	
R1158,59	EXB38V680J	RESISTOR ARRAY	2	
R1160	ERJ3GEYJ102	M 1KOHM,J,1/16W	1	
R1161	ERJ3GEYJ332	M 3.3KOHM,J,1/16W	1	
R1162-64	TAJAAH0101JV	M 100 OHM,J,1/16W	3	D0GB101JA006
R1167-69	TAJAAH0101JV	M 100 OHM,J,1/16W	3	D0GB101JA006
R1170,71	ERJ3GEYJ103	M 10KOHM,J,1/16W	2	
R1172	ERJ3GEYJ272	M 2.7KOHM,J,1/16W	1	
R1174-76	ERJ3GEYJ272	M 2.7KOHM,J,1/16W	3	
R1177	ERJ3GEY0R00	M 0 OHM, 1/16W	1	
R1178	TAJAAH0101JV	M 100 OHM,J,1/16W	1	D0GB101JA006
R1179	ERJ3GEYJ473	M 47KOHM,J,1/16W	1	
R1180	ERJ3GEY0R00	M 0 OHM, 1/16W	1	
R1181	ERJ3GEYJ103	M 10KOHM,J,1/16W	1	
R1182,83	TAJAAH0101JV	M 100 OHM,J,1/16W	2	D0GB101JA006
R1184	ERJ3GEYJ103	M 10KOHM,J,1/16W	1	
R1185	ERJ3GEYJ562	M 5.6KOHM,J,1/16W	1	
R1186	ERJ3GEYJ103	M 10KOHM,J,1/16W	1	
R1187	ERJ3GEYJ102	M 1KOHM,J,1/16W	1	
R1188-90	ERJ3GEYJ103	M 10KOHM,J,1/16W	3	
R1192,93	ERJ3GEYJ103	M 10KOHM,J,1/16W	2	
R1195-97	ERJ3GEYJ103	M 10KOHM,J,1/16W	3	
R1202,03	ERJ3GEYJ562	M 5.6KOHM,J,1/16W	2	
R1205	ERJ6ENF75R0	M 75 OHM, 1/10W	1	

Ref. No.	Part No.	Part Name & Description	Pcs	Remarks
R1207	ERJ3GEYJ472	M 4.7KOHM,J,1/16W	1	
R1208-10	ERJ3GEYJ820	M 82 OHM,J,1/16W	3	
R1212	ERJ6ENF75R0	M 75 OHM, 1/10W	1	
R1213	ERJ3GEYJ102	M 1KOHM,J,1/16W	1	
R1214	TAJAAH0470JV	M 47 OHM,J,1/16W	1	D0GB470JA006
R1215	ERJ3GEYJ103	M 10KOHM,J,1/16W	1	
R1222	ERJ3GEY0R00	M 0 OHM, 1/16W	1	
R1224	ERJ3GEY0R00	M 0 OHM, 1/16W	1	
R1225,26	ERJ3GEYJ103	M 10KOHM,J,1/16W	2	
R1227	ERJ3GEY0R00	M 0 OHM, 1/16W	1	
R1228	ERJ3GEYJ102	M 1KOHM,J,1/16W	1	
R1229	TAJAAH0101JV	M 100 OHM,J,1/16W	1	D0GB101JA006
R1230	ERJ3GEYJ103	M 10KOHM,J,1/16W	1	
R1231	ERJ3GEYJ471	M 470 OHM,J,1/16W	1	
R1232	ERJ3GEYJ223	M 22KOHM,J,1/16W	1	
R1233	ERJ3GEYJ103	M 10KOHM,J,1/16W	1	
R1234	ERJ3GEYJ102	M 1KOHM,J,1/16W	1	
R1235,36	ERJ3GEYJ472	M 4.7KOHM,J,1/16W	2	
R1237	ERJ3GEYJ103	M 10KOHM,J,1/16W	1	
R1242,43	ERJ3GEYJ683	M 68KOHM,J,1/16W	2	
R1245-47	ERJ3GEYJ560	M 56 OHM,J,1/16W	3	
R1249	ERJ3GEYJ153	M 15KOHM,J,1/16W	1	
R1254	ERJ3GEYJ104	M 100KOHM,J,1/16W	1	
R1255	ERJ3GEYJ473	M 47KOHM,J,1/16W	1	
R1256	ERJ3GEYJ104	M 100KOHM,J,1/16W	1	
R1257	ERJ3GEYJ473	M 47KOHM,J,1/16W	1	
R1258	ERJ3GEYJ102	M 1KOHM,J,1/16W	1	
R1259,60	TAJAAH0101JV	M 100 OHM,J,1/16W	2	D0GB101JA006
R1262	ERJ3GEYJ103	M 10KOHM,J,1/16W	1	
R1263,64	ERJ3GEY0R00	M 0 OHM, 1/16W	2	
R1266,67	ERJ3GEYJ683	M 68KOHM,J,1/16W	2	
R1268	ERJ3GEYJ103	M 10KOHM,J,1/16W	1	
R1269	ERJ3GEYJ560	M 56 OHM,J,1/16W	1	
R1270-79	TAJAAH0101JV	M 100 OHM,J,1/16W	10	D0GB101JA006
R1280,81	TAJAAH0470JV	M 47 OHM,J,1/16W	2	D0GB470JA006
R1282-84	TAJAAH0101JV	M 100 OHM,J,1/16W	3	D0GB101JA006
R1285	ERJ3GEY0R00	M 0 OHM, 1/16W	1	
R1286,87	TAJAAH0101JV	M 100 OHM,J,1/16W	2	D0GB101JA006
R1290	ERJ3GEYJ103	M 10KOHM,J,1/16W	1	
R1292	ERJ3GEYJ223	M 22KOHM,J,1/16W	1	
R1301	ERJ3GEY0R00	M 0 OHM, 1/16W	1	
R1303	ERJ3GEY0R00	M 0 OHM, 1/16W	1	
R1304	ERJ3GEYJ330	M 33 OHM,J,1/16W	1	
R1305	ERJ3GEY0R00	M 0 OHM, 1/16W	1	
R1306	ERJ3EKF1800	M 180 OHM, 1/16W	1	
R1307	ERJ3GEY0R00	M 0 OHM, 1/16W	1	
R1308	ERJ3EKF1800	M 180 OHM, 1/16W	1	
R1310	ERJ3GEYJ151	M 150 OHM,J,1/16W	1	
R1311,12	ERJ3GEYJ221	M 220 OHM,J,1/16W	2	
R1313	ERJ3GEYJ103	M 10KOHM,J,1/16W	1	
R1317	ERJ3GEYJ473	M 47KOHM,J,1/16W	1	
R1318	ERJ3GEYJ222	M 2.2KOHM,J,1/16W	1	
R1319	ERJ3GEYJ103	M 10KOHM,J,1/16W	1	
R1320	ERJ3GEYJ331	M 330 OHM,J,1/16W	1	
R1321	ERJ3GEYJ681	M 680 OHM,J,1/16W	1	
R1322	ERJ3GEYJ331	M 330 OHM,J,1/16W	1	
R1323	ERJ3GEYJ222	M 2.2KOHM,J,1/16W	1	
R1324	ERJ3GEYJ331	M 330 OHM,J,1/16W	1	
R1325	ERJ3GEY0R00	M 0 OHM, 1/16W	1	
R1326	ERJ3GEYJ221	M 220 OHM,J,1/16W	1	
R1328	ERJ3GEYJ222	M 2.2KOHM,J,1/16W	1	
R1330	ERJ3GEYJ223	M 22KOHM,J,1/16W	1	
R1332	ERJ3EKF4700	M 470 OHM, 1/16W	1	

Ref. No.	Part No.	Part Name & Description	Pcs	Remarks
R1333,34	ERJ3EKF2700	M 270 OHM, 1/16W	2	
R1338,39	ERJ3EKF1200	M 120 OHM, 1/16W	2	
R1344,45	ERJ3EKF6801	M 6.8KOHM, 1/16W	2	
R1348,49	ERJ3GEYJ821	M 820 OHM,J,1/16W	2	
R1353	ERJ3EKF2100	M 210 OHM, 1/16W	1	
R1357	ERJ3EKF1331	M13.3KOHM, 1/16W	1	
R1360	ERJ3GEYJ222	M 2.2KOHM,J,1/16W	1	
R1366-69	ERJ3GEYJ223	M 22KOHM,J,1/16W	4	
R1370,71	ERJ3GEYJ102	M 1KOHM,J,1/16W	2	
R1372-75	ERJ3GEYJ103	M 10KOHM,J,1/16W	4	
R1380,81	ERJ3GEY0R00	M 0 OHM, 1/16W	2	
R1382	ERJ3GEYJ221	M 220 OHM,J,1/16W	1	
R1383,84	ERJ3GEY0R00	M 0 OHM, 1/16W	2	
R1385	ERJ3GEYJ221	M 220 OHM,J,1/16W	1	
R1386	ERJ3GEYJ471	M 470 OHM,J,1/16W	1	
R1387	ERJ3GEY0R00	M 0 OHM, 1/16W	1	
R1388	ERJ3GEYJ681	M 680 OHM,J,1/16W	1	
R1389	ERJ3GEY0R00	M 0 OHM, 1/16W	1	
R1390	ERJ3GEYJ681	M 680 OHM,J,1/16W	1	
R1391	ERJ3EKF2400	M 240 OHM, 1/16W	1	
R1392	ERJ3GEYJ221	M 220 OHM,J,1/16W	1	
R1393	ERJ3EKF2400	M 240 OHM, 1/16W	1	
R1394	ERJ3GEYJ471	M 470 OHM,J,1/16W	1	
R1395	ERJ3GEYJ121	M 120 OHM,J,1/16W	1	
R1396	ERJ3GEYJ472	M 4.7KOHM,J,1/16W	1	
R1397	ERJ3GEYJ152	M 1.5KOHM,J,1/16W	1	
R1398	ERJ3GEY0R00	M 0 OHM, 1/16W	1	
R1399,00	ERJ3GEYJ103	M 10KOHM,J,1/16W	2	
R1401	ERJ3EKF2200	M 220 OHM, 1/16W	1	
R1402	ERJ3GEYJ151	M 150 OHM,J,1/16W	1	
R1403	ERJ3EKF2200	M 220 OHM, 1/16W	1	
R1406	ERJ3EKF2701	M 2.7KOHM, 1/16W	1	
R1407	ERJ3GEYJ222	M 2.2KOHM,J,1/16W	1	
R1408	ERJ3GEYJ151	M 150 OHM,J,1/16W	1	
R1409	ERJ3GEYJ222	M 2.2KOHM,J,1/16W	1	
R1410	ERJ3EKF1101	M 1.1KOHM, 1/16W	1	
R1411	ERJ3EKF1401	M 1.4KOHM, 1/16W	1	
R1412	ERJ3GEY0R00	M 0 OHM, 1/16W	1	
R1413	ERJ3EKF2550	M 255 OHM, 1/16W	1	
R1414	ERJ3EKF1101	M 1.1KOHM, 1/16W	1	
R1415	ERJ3EKF1401	M 1.4KOHM, 1/16W	1	
R1416	ERJ3EKF2701	M 2.7KOHM, 1/16W	1	
R1417	ERJ3EKF1800	M 180 OHM, 1/16W	1	
R1418	ERJ3EKF43R0	M 43 OHM, 1/16W	1	
R1419	ERJ3EKF1020	M 102 OHM, 1/16W	1	
R1420,21	ERJ3GEYJ220	M 22 OHM,J,1/16W	2	
R1422	ERJ3EKF47R0	M 47 OHM, 1/16W	1	
R1423,24	ERJ3EKF3901	M 3.9KOHM, 1/16W	2	
R1435	ERJ3GEYJ103	M 10KOHM,J,1/16W	1	
R1439	ERJ3GEYJ103	M 10KOHM,J,1/16W	1	
R1443	ERJ3GEYJ103	M 10KOHM,J,1/16W	1	
R1446	ERJ3GEYJ103	M 10KOHM,J,1/16W	1	
R1447	ERJ3GEY0R00	M 0 OHM, 1/16W	1	
R1459	ERJ3GEYJ333	M 33KOHM,J,1/16W	1	
R1461	ERJ3GEYJ472	M 4.7KOHM,J,1/16W	1	
R1464	ERJ3GEYJ103	M 10KOHM,J,1/16W	1	
R1467	ERJ3GEY0R00	M 0 OHM, 1/16W	1	
R1468,69	ERJ3GEYJ333	M 33KOHM,J,1/16W	2	
R1470	ERJ3GEYJ823	M 82KOHM,J,1/16W	1	
R1472	ERJ3GEYJ332	M 3.3KOHM,J,1/16W	1	
R1474	ERJ3GEYJ105	M 1MOHM,J,1/16W	1	
R1476	ERJ3GEYJ182	M 1.8KOHM,J,1/16W	1	

Ref. No.	Part No.	Part Name & Description	Pcs	Remarks
R1477,78	TAJAAH0101JV	M 100 OHM,J,1/16W	2	D0GB101JA006
R1479	ERJ3GEYJ220	M 22 OHM,J,1/16W	1	
R1481	ERJ3GEYJ220	M 22 OHM,J,1/16W	1	
R1484	ERJ3GEYJ221	M 220 OHM,J,1/16W	1	
R1485	ERJ3GEYJ822	M 8.2KOHM,J,1/16W	1	
R1486	ERJ3GEYJ330	M 33 OHM,J,1/16W	1	
R1487	ERJ3GEY0R00	M 0 OHM, 1/16W	1	
R1488,89	ERJ3GEYJ102	M 1KOHM,J,1/16W	2	
R1490	ERJ3EKF2701	M 2.7KOHM, 1/16W	1	
R1491	ERJ3EKF1401	M 1.4KOHM, 1/16W	1	
R1492	ERJ3EKF1101	M 1.1KOHM, 1/16W	1	
R1493	ERJ3EKF33R0	M 33 OHM, 1/16W	1	
R1494	ERJ3EKF1500	M 150 OHM, 1/16W	1	
R1495	ERJ3EKF75R0	M 0.75HM, 1/16W	1	
R1496	ERJ3GEYJ100	M 10 OHM,J,1/16W	1	
R1497	ERJ3EKF1401	M 1.4KOHM, 1/16W	1	
R1498	ERJ3GEYJ330	M 33 OHM,J,1/16W	1	
R1499	ERJ3EKF1101	M 1.1KOHM, 1/16W	1	
R1500	ERJ3EKF33R0	M 33 OHM, 1/16W	1	
R1501	ERJ3EKF2701	M 2.7KOHM, 1/16W	1	
R1502,03	ERJ3EKF1401	M 1.4KOHM, 1/16W	2	
R1504	ERJ3EKF75R0	M 0.75HM, 1/16W	1	
R1505	ERJ3GEYJ100	M 10 OHM,J,1/16W	1	
R1507	ERJ3EKF33R0	M 33 OHM, 1/16W	1	
R1509	ERJ3EKF1500	M 150 OHM, 1/16W	1	
R1510	ERJ3GEYJ100	M 10 OHM,J,1/16W	1	
R1511	ERJ3EKF75R0	M 0.75HM, 1/16W	1	
R1512,13	ERJ3EKF1101	M 1.1KOHM, 1/16W	2	
R1514	ERJ3GEYJ271	M 270 OHM,J,1/16W	1	
R1515	ERJ3EKF33R0	M 33 OHM, 1/16W	1	
R1516	ERJ3GEYJ102	M 1KOHM,J,1/16W	1	
R1517	ERJ3EKF2701	M 2.7KOHM, 1/16W	1	
R1518	ERJ3EKF33R0	M 33 OHM, 1/16W	1	
R1519	ERJ3GEYJ151	M 150 OHM,J,1/16W	1	
R1520	ERJ3EKF1500	M 150 OHM, 1/16W	1	
R1521	ERJ3EKF2701	M 2.7KOHM, 1/16W	1	
R1522	ERJ3EKF33R0	M 33 OHM, 1/16W	1	
R1526	ERJ3GEY0R00	M 0 OHM, 1/16W	1	
R1528	ERJ3GEY0R00	M 0 OHM, 1/16W	1	
R1529	ERJ3GEYJ102	M 1KOHM,J,1/16W	1	
R1531	ERJ3GEYJ102	M 1KOHM,J,1/16W	1	
R1532,33	ERJ3GEY0R00	M 0 OHM, 1/16W	2	
R1534	ERJ3GEYJ220	M 22 OHM,J,1/16W	1	
R1535	ERJ3GEYJ102	M 1KOHM,J,1/16W	1	
R1536	ERJ3GEYJ220	M 22 OHM,J,1/16W	1	
R1537	TAJAAH0101JV	M 100 OHM,J,1/16W	1	D0GB101JA006
R1539	ERJ3GEYJ221	M 220 OHM,J,1/16W	1	
R1540,41	ERJ3GEYJ102	M 1KOHM,J,1/16W	2	
R1542	ERJ3GEYJ162	M 1.6KOHM,J,1/16W	1	
R1545	ERJ3GEYJ560	M 56 OHM,J,1/16W	1	
R1546,47	TAJAAH0101JV	M 100 OHM,J,1/16W	2	D0GB101JA006
R1548	ERJ3GEYJ560	M 56 OHM,J,1/16W	1	
R1549,50	ERJ3GEYJ121	M 120 OHM,J,1/16W	2	
R1551	ERJ3GEYJ162	M 1.6KOHM,J,1/16W	1	
R1552	ERJ3GEYJ331	M 330 OHM,J,1/16W	1	
R1553	ERJ3GEYJ242	M 2.4KOHM,J,1/16W	1	
R1554,55	ERJ3GEYJ222	M 2.2KOHM,J,1/16W	2	
R1557-59	ERJ3GEYJ121	M 120 OHM,J,1/16W	3	
R1562,63	ERJ3GEYJ103	M 10KOHM,J,1/16W	2	
R1570	ERJ3GEYJ152	M 1.5KOHM,J,1/16W	1	
R1573-76	ERJ3GEYJ471	M 470 OHM,J,1/16W	4	
R1578,79	ERJ3GEY0R00	M 0 OHM, 1/16W	2	

Ref. No.	Part No.	Part Name & Description	Pcs	Remarks
R1604,05	ERJ3GEYJ471	M 470 OHM,J,1/16W	2	
R1606-08	ERJ3EKF33R0	M 33 OHM, 1/16W	3	
R1609-11	ERJ3EKF1500	M 150 OHM, 1/16W	3	
R1612-14	ERJ3EKF33R0	M 33 OHM, 1/16W	3	
R1615	ERJ3EKF2200	M 220 OHM, 1/16W	1	
R1623,24	ERJ3GEYJ220	M 22 OHM,J,1/16W	2	
R1626	ERJ3EKF1401	M 1.4KOHM, 1/16W	1	
R1627	ERJ3EKF1001	M 1KOHM, 1/16W	1	
R1628	ERJ3EKF2701	M 2.7KOHM, 1/16W	1	
R1629	ERJ3GEYJ220	M 22 OHM,J,1/16W	1	
R1630	ERJ3GEYJ221	M 220 OHM,J,1/16W	1	
R1634	ERJ3GEYJ222	M 2.2KOHM,J,1/16W	1	
R1635	ERJ3GEYJ331	M 330 OHM,J,1/16W	1	
R1639	ERJ3GEY0R00	M 0 OHM, 1/16W	1	
R1647	ERJ6GEYJ271	M 270 OHM,J,1/10W	1	
R1649,50	ERJ6GEYJ271	M 270 OHM,J,1/10W	2	
R1652,53	EXB38VR000	RESISTOR ARRAY	2	
R1654-61	EXB38V820J	RESISTOR ARRAY	8	
R1662,63	EXB38VR000	RESISTOR ARRAY	2	
R1664	ERJ3GEY0R00	M 0 OHM, 1/16W	1	
R1665-68	ERJ3GEYJ221	M 220 OHM,J,1/16W	4	
R1669,70	ERJ3GEY0R00	M 0 OHM, 1/16W	2	
R1672-79	EXB38V820J	RESISTOR ARRAY	8	
R1680	ERJ3GEYJ331	M 330 OHM,J,1/16W	1	
R1681	TAJAAH0101JV	M 100 OHM,J,1/16W	1	D0GB101JA006
R1682	ERJ3GEY0R00	M 0 OHM, 1/16W	1	
R1683-85	ERJ6GEYJ391	M 390 OHM,J,1/10W	3	
R1686	ERJ3GEY0R00	M 0 OHM, 1/16W	1	
R1687-89	ERJ6GEYJ121	M 120 OHM,J,1/10W	3	
R1694	ERJ3GEY0R00	M 0 OHM, 1/16W	1	
R1700,01	ERJ3GEYJ221	M 220 OHM,J,1/16W	2	
R1702	ERJ3GEYJ821	M 820 OHM,J,1/16W	1	
R1703	ERJ3GEYJ681	M 680 OHM,J,1/16W	1	
R1704	ERJ3GEY0R00	M 0 OHM, 1/16W	1	
R1705	ERJ3GEYJ473	M 47KOHM,J,1/16W	1	
R1706	ERJ3GEYJ103	M 10KOHM,J,1/16W	1	
R1707	ERJ3GEYJ223	M 22KOHM,J,1/16W	1	
R1708,09	ERJ3GEY0R00	M 0 OHM, 1/16W	2	
R1710-13	EXB38V221J	RESISTOR ARRAY	4	
R1714-17	ERJ3GEY0R00	M 0 OHM, 1/16W	4	
R1719	ERJ3GEY0R00	M 0 OHM, 1/16W	1	
R1721	ERJ3GEY0R00	M 0 OHM, 1/16W	1	
R1722	ERJ3GEYJ100	M 10 OHM,J,1/16W	1	
R1723	ERJ3GEYJ222	M 2.2KOHM,J,1/16W	1	
R1724	TAJAAH0101JV	M 100 OHM,J,1/16W	1	D0GB101JA006
R1728,29	ERJ3GEYJ103	M 10KOHM,J,1/16W	2	
R1731,32	ERJ3GEYJ103	M 10KOHM,J,1/16W	2	
R1734-36	ERJ3GEYJ331	M 330 OHM,J,1/16W	3	
R1737	ERJ3GEYJ103	M 10KOHM,J,1/16W	1	
R1739	ERJ3GEYJ103	M 10KOHM,J,1/16W	1	
R1741-44	ERJ3GEYJ220	M 22 OHM,J,1/16W	4	
R1745	ERJ3GEYJ473	M 47KOHM,J,1/16W	1	
R1746-48	ERJ3GEY0R00	M 0 OHM, 1/16W	3	
R1750	ERJ3GEYJ331	M 330 OHM,J,1/16W	1	

Ref. No.	Part No.	Part Name & Description	Pcs	Remarks
R1751	ERJ3EKF5110	M 511 OHM, 1/16W	1	
R1752	ERJ3GEYJ102	M 1KOHM,J,1/16W	1	
R1753	ERJ3EKF1101	M 1.1KOHM, 1/16W	1	
R1755	ERJ3GEY0R00	M 0 OHM, 1/16W	1	
R1756	ERJ6GEYJ471	M 470 OHM,J,1/10W	1	
R1757	ERJ3EKF1200	M 120 OHM, 1/16W	1	
R1758	ERJ3GEYJ102	M 1KOHM,J,1/16W	1	
R1759	ERJ3GEY0R00	M 0 OHM, 1/16W	1	
R1760	ERJ6GEYJ331	M 330 OHM,J,1/10W	1	
R1761	ERJ3EKF1800	M 180 OHM, 1/16W	1	
R1762	ERJ3EKF1500	M 150 OHM, 1/16W	1	
R1765	ERJ3GEY0R00	M 0 OHM, 1/16W	1	
R1766	ERJ3EKF1500	M 150 OHM, 1/16W	1	
R1767	ERJ3GEYJ103	M 10KOHM,J,1/16W	1	
R1768	ERJ3GEYJ331	M 330 OHM,J,1/16W	1	
R1769	ERJ3EKF4701	M 4.7KOHM, 1/16W	1	
R1770	ERJ3GEYJ102	M 1KOHM,J,1/16W	1	
R1771	ERJ3GEYJ473	M 47KOHM,J,1/16W	1	
R1772	ERJ3GEYJ821	M 820 OHM,J,1/16W	1	
R1773	ERJ3EKF39R0	M 39 OHM, 1/16W	1	
R1774	ERJ3GEY0R00	M 0 OHM, 1/16W	1	
R1775	ERJ6GEYJ471	M 470 OHM,J,1/10W	1	
R1776	ERJ3GEYJ222	M 2.2KOHM,J,1/16W	1	
R1777	ERJ3EKF1200	M 120 OHM, 1/16W	1	
R1778	ERJ3GEYJ102	M 1KOHM,J,1/16W	1	
R1779	ERJ3GEY0R00	M 0 OHM, 1/16W	1	
R1780	ERJ3GEYJ223	M 22KOHM,J,1/16W	1	
R1781	ERJ3GEYJ330	M 33 OHM,J,1/16W	1	
R1782	ERJ3GEYJ102	M 1KOHM,J,1/16W	1	
R1783	ERJ3GEY0R00	M 0 OHM, 1/16W	1	
R1784	ERJ3EKF1800	M 180 OHM, 1/16W	1	
R1785	ERJ3GEYJ103	M 10KOHM,J,1/16W	1	
R1787	ERJ3EKF20R0	M 20 OHM, 1/16W	1	
R1790	ERJ3EKF2611	M2.61KOHM, 1/16W	1	
R1791	ERJ3GEYJ681	M 680 OHM,J,1/16W	1	
R1792	ERJ3GEYJ330	M 33 OHM,J,1/16W	1	
R1793	ERJ3EKF1500	M 150 OHM, 1/16W	1	
R1794	ERJ3EKF4701	M 4.7KOHM, 1/16W	1	
R1795	ERJ3GEY0R00	M 0 OHM, 1/16W	1	
R1796	ERJ3GEYJ330	M 33 OHM,J,1/16W	1	
R1797	ERJ3GEYJ821	M 820 OHM,J,1/16W	1	
R1798	ERJ6GEYJ471	M 470 OHM,J,1/10W	1	
R1799	ERJ3GEY0R00	M 0 OHM, 1/16W	1	
R1807	ERJ3GEYJ330	M 33 OHM,J,1/16W	1	
R1817	ERJ6GEYJ331	M 330 OHM,J,1/10W	1	
R1827	ERJ6GEYJ471	M 470 OHM,J,1/10W	1	
R1850,51	ERJ3GEY0R00	M 0 OHM, 1/16W	2	
R1852	ERJ3GEYJ103	M 10KOHM,J,1/16W	1	
R1853	ERJ3GEY0R00	M 0 OHM, 1/16W	1	
R1854	TAJAAH0101JV	M 100 OHM,J,1/16W	1	D0GB101JA006
R1855	ERJ3GEYJ103	M 10KOHM,J,1/16W	1	
R1856,57	ERJ3GEY0R00	M 0 OHM, 1/16W	2	
R1858-60	ERJ3GEYJ331	M 330 OHM,J,1/16W	3	
R1861-63	ERJ3GEY0R00	M 0 OHM, 1/16W	3	
R1866-69	ERJ3GEYJ103	M 10KOHM,J,1/16W	4	
R1870,71	ERJ3GEYJ220	M 22 OHM,J,1/16W	2	
R1872	ERJ3GEYJ103	M 10KOHM,J,1/16W	1	
R1875	ERJ3GEY0R00	M 0 OHM, 1/16W	1	
R1877	ERJ3GEYJ103	M 10KOHM,J,1/16W	1	
R1878,79	ERJ3GEYJ331	M 330 OHM,J,1/16W	2	
R1882	ERJ6ENF75R0	M 75 OHM, 1/10W	1	
R1883	ERJ3GEYJ271	M 270 OHM,J,1/16W	1	
R1884	TAJAAH0101JV	M 100 OHM,J,1/16W	1	D0GB101JA006
R1885	ERJ6GEYJ100	M 10 OHM,J,1/10W	1	
R1886,87	ERJ3GEYJ332	M 3.3KOHM,J,1/16W	2	
R1888	TAJAAH0101JV	M 100 OHM,J,1/16W	1	D0GB101JA006
R1889	ERJ3GEYJ222	M 2.2KOHM,J,1/16W	1	

Ref. No.	Part No.	Part Name & Description	Pcs	Remarks
R1890	ERJ3GEYJ332	M 3.3KOHM,J,1/16W	1	
R1892	ERJ3EKF1501	M 1.5KOHM, 1/16W	1	
R1893	ERJ3EKF4701	M 4.7KOHM, 1/16W	1	
R1896	TAJAAH0101JV	M 100 OHM,J,1/16W	1	D0GB101JA006
R1899	ERJ3EKF3301	M 3.3KOHM, 1/16W	1	
R1901	ERJ3GEY0R00	M 0 OHM, 1/16W	1	
R1902	ERJ3EKF2201	M 2.2KOHM, 1/16W	1	
R1903	ERJ6GEYJ104	M 100KOHM,J,1/10W	1	
R1904	ERJ3EKF8200	M 820 OHM, 1/16W	1	
R1905-08	ERJ3GEY0R00	M 0 OHM, 1/16W	4	
R1909	ERJ3EKF4701	M 4.7KOHM, 1/16W	1	
R1910-33	ERJ3GEYJ820	M 82 OHM,J,1/16W	24	
R1934	TAJAAH0101JV	M 100 OHM,J,1/16W	1	D0GB101JA006
R1935	ERJ3GEY0R00	M 0 OHM, 1/16W	1	
R1936	TAJAAH0101JV	M 100 OHM,J,1/16W	1	D0GB101JA006
R1937	ERJ3EKF4701	M 4.7KOHM, 1/16W	1	
R1938	ERJ6GEYJ183	M 18KOHM,J,1/10W	1	
R1939	ERJ3GEYJ560	M 56 OHM,J,1/16W	1	
R1940	ERJ3GEY0R00	M 0 OHM, 1/16W	1	
R1941	EXB38V820J	RESISTOR ARRAY	1	
R1942	TAJAAH0101JV	M 100 OHM,J,1/16W	1	D0GB101JA006
R1943	ERJ3GEY0R00	M 0 OHM, 1/16W	1	
R1944	ERJ6GEYJ102	M 1KOHM,J,1/10W	1	
R1945	EXB38V820J	RESISTOR ARRAY	1	
R1946-48	ERJ6GEYJ222	M 2.2KOHM,J,1/10W	3	
R1949	EXB38V820J	RESISTOR ARRAY	1	
R1952	ERJ6ENF75R0	M 75 OHM, 1/10W	1	
R1953	EXB38V820J	RESISTOR ARRAY	1	
R1954	ERJ6ENF75R0	M 75 OHM, 1/10W	1	
R1955,56	TAJAAH0101JV	M 100 OHM,J,1/16W	2	D0GB101JA006
R1957	EXB38V820J	RESISTOR ARRAY	1	
R1958,59	TAJAAH0101JV	M 100 OHM,J,1/16W	2	D0GB101JA006
R1960	ERJ3GEYJ820	M 82 OHM,J,1/16W	1	
R1961	EXB38V820J	RESISTOR ARRAY	1	
R1963,64	ERJ3GEYJ330	M 33 OHM,J,1/16W	2	
R1965	TAJAAH0101JV	M 100 OHM,J,1/16W	1	D0GB101JA006
R1966,67	ERJ3GEYJ152	M 1.5KOHM,J,1/16W	2	
R1968-70	ERJ3EKF75R0	M 0.75HM, 1/16W	3	
R1971	ERJ3GEYJ152	M 1.5KOHM,J,1/16W	1	
R1972-74	ERJ3GEYJ102	M 1KOHM,J,1/16W	3	
R1975,76	ERJ3GEYJ562	M 5.6KOHM,J,1/16W	2	
R1989,90	TAJAAH0101JV	M 100 OHM,J,1/16W	2	D0GB101JA006
R1991-94	ERJ3GEYJ102	M 1KOHM,J,1/16W	4	
R2001,02	TAJAAH0101JV	M 100 OHM,J,1/16W	2	D0GB101JA006
R2003	ERJ3GEYJ183	M 18KOHM,J,1/16W	1	
R2004	ERJ3GEYJ103	M 10KOHM,J,1/16W	1	
R2006,07	ERJ3GEYJ472	M 4.7KOHM,J,1/16W	2	
R2009,10	TAJAAH0101JV	M 100 OHM,J,1/16W	2	D0GB101JA006
R2014-17	ERJ3GEYJ221	M 220 OHM,J,1/16W	4	
R2021	ERJ3GEYJ472	M 4.7KOHM,J,1/16W	1	TH-37PA30A
R2022	ERJ6GEYJ561	M 560 OHM,J,1/10W	1	TH-37PA30A
R2023	ERJ3GEYJ471	M 470 OHM,J,1/16W	1	
R2025	ERJ3GEYJ332	M 3.3KOHM,J,1/16W	1	TH-37PA30A
R2026	ERJ6GEYJ681	M 680 OHM,J,1/10W	1	TH-37PA30A
R2027	TAJAAH0101JV	M 100 OHM,J,1/16W	1	D0GB101JA006
R2029	ERJ3GEYJ103	M 10KOHM,J,1/16W	1	TH-37PA30A
R2030	ERJ3GEYJ332	M 3.3KOHM,J,1/16W	1	TH-37PA30A
R2031	ERJ3GEYJ331	M 330 OHM,J,1/16W	1	TH-37PA30A
R2032	ERJ3GEYJ102	M 1KOHM,J,1/16W	1	TH-37PA30A
R2033	ERJ6ENF1781	M1.78KOHM, 1/10W	1	

Ref. No.	Part No.	Part Name & Description	Pcs	Remarks
R2034	ERJ6ENF1601	M 1.6KOHM, 1/10W	1	
R2046	ERJ6GEYJ471	M 470 OHM,J,1/10W	1	TH-37PA30A
R2047,48	ERJ3GEYJ221	M 220 OHM,J,1/16W	2	
R2049,50	ERJ3GEY0R00	M 0 OHM, 1/16W	2	
R2052	ERJ3GEYJ221	M 220 OHM,J,1/16W	1	TH-37PA30A
R2054	ERJ3GEYJ102	M 1KOHM,J,1/16W	1	TH-37PA30A
R2055	ERJ3GEYJ561	M 560 OHM,J,1/16W	1	TH-37PA30A
R2058,59	ERJ3GEY0R00	M 0 OHM, 1/16W	2	
R2200,01	ERJ3GEYJ473	M 47KOHM,J,1/16W	2	
R2203	ERJ3GEYJ103	M 10KOHM,J,1/16W	1	
R2204,05	ERJ6GEY0R00	M 0 OHM, 1/10W	2	
R2206,07	ERJ3GEYJ103	M 10KOHM,J,1/16W	2	
R2208,09	ERJ6GEY0R00	M 0 OHM, 1/10W	2	
R2210,11	TAJAAH0101JV	M 100 OHM,J,1/16W	2	D0GB101JA006
R2220,21	ERJ6GEYJ101	M 100 OHM,J,1/10W	2	
R2222	ERJ6GEYJ2R2	M 2.2 OHM,J,1/10W	1	
R2225,26	ERJ6GEYJ2R2	M 2.2 OHM,J,1/10W	2	
R2245	ERJ3GEYJ103	M 10KOHM,J,1/16W	1	
R2250,51	ERJ3GEYJ103	M 10KOHM,J,1/16W	2	
R2253	ERJ3GEYJ473	M 47KOHM,J,1/16W	1	
R2254	ERJ3GEYJ333	M 33KOHM,J,1/16W	1	
R2256	ERJ3GEYJ473	M 47KOHM,J,1/16W	1	
R2257	ERJ3GEYJ333	M 33KOHM,J,1/16W	1	
R2258	TAJAAH0101JV	M 100 OHM,J,1/16W	1	D0GB101JA006
R2259	ERJ3GEYJ472	M 4.7KOHM,J,1/16W	1	
R2260	TAJAAH0101JV	M 100 OHM,J,1/16W	1	D0GB101JA006
R2261	ERJ3GEYJ472	M 4.7KOHM,J,1/16W	1	
R2279	ERJ3GEYJ333	M 33KOHM,J,1/16W	1	
R2282	ERJ3GEYJ333	M 33KOHM,J,1/16W	1	
R2283	ERJ3GEYJ473	M 47KOHM,J,1/16W	1	
R2284	ERJ3GEYJ273	M 27KOHM,J,1/16W	1	
R2286	ERJ3GEYJ103	M 10KOHM,J,1/16W	1	
R2295	ERJ3GEYJ473	M 47KOHM,J,1/16W	1	
R2296	ERJ3GEYJ273	M 27KOHM,J,1/16W	1	
R2305,06	ERJ6GEYJ222	M 2.2KOHM,J,1/10W	2	
R2307,08	ERJ6GEYJ202	M 2KOHM,J,1/10W	2	
R2311-16	ERDS1FJ2R2	C 2.2 OHM, J,1/2W	6	
R2317,18	ERJ6GEYJ271	M 270 OHM,J,1/10W	2	
R2319,20	ERJ6GEYJ222	M 2.2KOHM,J,1/10W	2	
R2321,22	ERJ6GEYJ104	M 100KOHM,J,1/10W	2	
R2323-28	ERDS1FJ2R2	C 2.2 OHM, J,1/2W	6	
R2329,30	ERJ6GEYJ203	M 20KOHM,J,1/10W	2	
R2331,32	ERJ3GEY0R00	M 0 OHM, 1/16W	2	
R2333,34	ERJ6GEY0R00	M 0 OHM, 1/10W	2	
R2335,36	ERJ3GEY0R00	M 0 OHM, 1/16W	2	
R2337,38	ERJ6GEYJ270	M 27 OHM,J,1/10W	2	
R2339,40	ERJ8GEYJ392	M 3.9KOHM, J,1/8W	2	
R2346,47	ERJ6GEYJ473	M 47KOHM,J,1/10W	2	
R2348	ERJ6GEYJ103	M 10KOHM,J,1/10W	1	
R2371	ERJ6GEYJ184	M 180KOHM,J,1/10W	1	
R2372	ERJ6GEYJ223	M 22KOHM,J,1/10W	1	
R2373	ERJ6GEYJ562	M 5.6KOHM,J,1/10W	1	
R2374	ERJ6GEYJ104	M 100KOHM,J,1/10W	1	

Ref. No.	Part No.	Part Name & Description	Pcs	Remarks
R2375	ERJ6GEYJ103	M 10KOHM,J,1/10W	1	
R2376	ERJ6GEYJ223	M 22KOHM,J,1/10W	1	
R2377	ERJ6GEYJ471	M 470 OHM,J,1/10W	1	
R2378	ERJ6GEYJ104	M 100KOHM,J,1/10W	1	
R2382,83	ERJ3GEY0R00	M 0 OHM, 1/16W	2	
R2385	ERJ6GEYJ821	M 820 OHM,J,1/10W	1	
R2390	ERJ6GEYJ102	M 1KOHM,J,1/10W	1	
R2391	ERJ6GEYJ682	M 6.8KOHM,J,1/10W	1	
R2392	ERJ6GEYJ273	M 27KOHM,J,1/10W	1	
R2393	ERJ6GEY0R00	M 0 OHM, 1/10W	1	
R2395	ERJ6GEYJ273	M 27KOHM,J,1/10W	1	
R2396	ERJ6GEY0R00	M 0 OHM, 1/10W	1	
R2398	ERJ6GEYJ102	M 1KOHM,J,1/10W	1	
R2401,02	ERJ3GEYJ562	M 5.6KOHM,J,1/16W	2	
R2403,04	ERJ3GEYJ223	M 22KOHM,J,1/16W	2	
R2405,06	ERJ3GEYJ220	M 22 OHM,J,1/16W	2	
R2408	ERJ3GEYJ333	M 33KOHM,J,1/16W	1	
R2409	ERJ3GEYJ472	M 4.7KOHM,J,1/16W	1	
R2412	ERJ3GEYJ184	M 180KOHM,J,1/16W	1	
R2413	ERJ3GEYJ333	M 33KOHM,J,1/16W	1	
R2414	ERJ3GEYJ473	M 47KOHM,J,1/16W	1	
R2415	ERJ3GEYJ104	M 100KOHM,J,1/16W	1	
R2416	ERJ3GEYJ184	M 180KOHM,J,1/16W	1	
R2417	ERJ3GEYJ333	M 33KOHM,J,1/16W	1	
R2418	ERJ3GEYJ473	M 47KOHM,J,1/16W	1	
R2419	ERJ3GEYJ104	M 100KOHM,J,1/16W	1	
R2420	ERJ3GEYJ563	M 56KOHM,J,1/16W	1	
R2421,22	ERJ3GEYJ363	M 36KOHM,J,1/16W	2	
R2423	ERJ3GEYJ563	M 56KOHM,J,1/16W	1	
R2427,28	TAJAAH0101JV	M 100 OHM,J,1/16W	2	D0GB101JA006
R2430,31	ERJ3GEYJ223	M 22KOHM,J,1/16W	2	
R2434,35	ERJ3GEYJ223	M 22KOHM,J,1/16W	2	
R2439	ERJ3GEYJ223	M 22KOHM,J,1/16W	1	
R2440	ERJ3GEYJ473	M 47KOHM,J,1/16W	1	
R2442	ERJ3GEYJ223	M 22KOHM,J,1/16W	1	
R2443	ERJ3GEYJ473	M 47KOHM,J,1/16W	1	
R2444,45	ERJ3GEYJ102	M 1KOHM,J,1/16W	2	
R2494	ERJ12YJ821	M 820 OHM,J, 1/2W	1	
R2651-54	TAJAAH0101JV	M 100 OHM,J,1/16W	4	D0GB101JA006
R2660	ERJ3GEYJ104	M 100KOHM,J,1/16W	1	
R2664,65	TAJAAH0101JV	M 100 OHM,J,1/16W	2	D0GB101JA006
R2666	ERJ3GEYJ105	M 1MOHM,J,1/16W	1	
R2667	TAJAAH0101JV	M 100 OHM,J,1/16W	1	D0GB101JA006
R2668	ERJ3GEYJ182	M 1.8KOHM,J,1/16W	1	
R2675,76	ERJ3GEYJ103	M 10KOHM,J,1/16W	2	
R3104,05	ERJ8ENF75R0	M 75 OHM, 1/8W	2	
R3106	ERJ3GEYJ104	M 100KOHM,J,1/16W	1	
R3107	ERJ8ENF75R0	M 75 OHM, 1/8W	1	
R3109	ERJ8ENF75R0	M 75 OHM, 1/8W	1	
R3112	ERJ8ENF75R0	M 75 OHM, 1/8W	1	
R3116	ERJ3GEYJ102	M 1KOHM,J,1/16W	1	
R3117-20	ERJ3GEYJ223	M 22KOHM,J,1/16W	4	
R3121	ERJ8ENF75R0	M 75 OHM, 1/8W	1	
R3122,23	ERJ3GEYJ104	M 100KOHM,J,1/16W	2	
R3124,25	ERJ3GEYJ223	M 22KOHM,J,1/16W	2	
R3126	ERJ8GEYJ331	M 330 OHM, J,1/8W	1	
R3127	ERJ3GEYJ333	M 33KOHM,J,1/16W	1	
R3130	ERJ3GEYJ102	M 1KOHM,J,1/16W	1	
R3132-34	ERJ3GEYJ333	M 33KOHM,J,1/16W	3	

Ref. No.	Part No.	Part Name & Description	Pcs	Remarks
R3137	ERJ3GEYJ103	M 10KOHM,J,1/16W	1	
R3143	ERJ3GEYJ102	M 1KOHM,J,1/16W	1	
R3145,46	ERJ3GEYJ333	M 33KOHM,J,1/16W	2	
R3147	ERJ3GEYJ331	M 330 OHM,J,1/16W	1	
R3148,49	ERJ3GEYJ821	M 820 OHM,J,1/16W	2	
R3150,51	ERJ3GEYJ103	M 10KOHM,J,1/16W	2	
R3156,57	ERJ6GEY0R00	M 0 OHM, 1/10W	2	
R3158-63	ERJ8ENF75R0	M 75 OHM, 1/8W	6	
R3174-79	ERJ3GEYJ333	M 33KOHM,J,1/16W	6	
R3184-86	ERJ3GEYJ820	M 82 OHM,J,1/16W	3	
R3187-89	ERJ3GEYJ471	M 470 OHM,J,1/16W	3	
R3204	ERJ3GEYJ221	M 220 OHM,J,1/16W	1	TH-37/42PA30H/M/R
R3205	ERJ3GEYJ221	M 220 OHM,J,1/16W	1	
R3207	ERJ3EKF5600	M 560 OHM, 1/16W	1	TH-37/42PA30H/M/R
R3208	ERJ3GEY0R00	M 0 OHM, 1/16W	1	
R3209	ERJ3GEY0R00	M 0 OHM, 1/16W	1	
R3210	ERJ3EKF5600	M 560 OHM, 1/16W	1	
R3214	ERJ3GEYJ103	M 10KOHM,J,1/16W	1	
R3215	ERJ3GEYJ221	M 220 OHM,J,1/16W	1	TH-37/42PA30H/M/R
R3216	ERJ3GEYJ221	M 220 OHM,J,1/16W	1	
R3220-22	ERJ3GEYJ820	M 82 OHM,J,1/16W	3	
R3223-25	TAJAAH0101JV	M 100 OHM,J,1/16W	3	D0GB101JA006
R3227-36	ERJ3GEYJ221	M 220 OHM,J,1/16W	10	
R3237	TAJAAH0470JV	M 47 OHM,J,1/16W	1	D0GB470JA006
R3238-41	ERJ3GEYJ221	M 220 OHM,J,1/16W	4	
R3242	TAJAAH0470JV	M 47 OHM,J,1/16W	1	D0GB470JA006
R3243-46	ERJ3GEYJ221	M 220 OHM,J,1/16W	4	
R3247-50	TAJAAH0101JV	M 100 OHM,J,1/16W	4	D0GB101JA006
R3251-53	ERJ3GEYJ221	M 220 OHM,J,1/16W	3	
R3255	ERJ3GEYJ221	M 220 OHM,J,1/16W	1	
R3259	ERJ3EKF7500	M 750 OHM, 1/16W	1	
R3260,61	ERJ3GEYJ104	M 100KOHM,J,1/16W	2	
R3262-64	ERJ3EKF7500	M 750 OHM, 1/16W	3	
R3265,66	TAJAAH0101JV	M 100 OHM,J,1/16W	2	D0GB101JA006
R3267,68	ERJ3EKF6980	M 698 OHM, 1/16W	2	
R3269	TAJAAH0101JV	M 100 OHM,J,1/16W	1	D0GB101JA006
R3270,71	ERJ3EKF6980	M 698 OHM, 1/16W	2	
R3275-77	ERJ3GEYJ471	M 470 OHM,J,1/16W	3	
R3280	ERJ3GEYJ221	M 220 OHM,J,1/16W	1	
R3281,82	ERJ3GEY0R00	M 0 OHM, 1/16W	2	
R3288,89	ERJ3GEYJ123	M 12KOHM,J,1/16W	2	
R3290	TAJAAH0101JV	M 100 OHM,J,1/16W	1	D0GB101JA006
R3291,92	TAJAAH0470JV	M 47 OHM,J,1/16W	2	D0GB470JA006
R3293	TAJAAH0101JV	M 100 OHM,J,1/16W	1	D0GB101JA006
R3296,97	TAJAAH0101JV	M 100 OHM,J,1/16W	2	TH-37/42PA30H/M/R
R3298	ERJ3GEYJ103	M 10KOHM,J,1/16W	1	

Ref. No.	Part No.	Part Name & Description	Pcs	Remarks
R3299,00	TAJAAH0101JV	M 100 OHM,J,1/16W	2	TH-37/42PA30H/M/R
R3301	ERJ3GEYJ152	M 1.5KOHM,J,1/16W	1	
R3302-04	ERJ3GEYJ103	M 10KOHM,J,1/16W	3	
R3701	ERJ6GEYJ683	M 68KOHM,J,1/10W	1	
R3702	ERJ6GEYJ223	M 22KOHM,J,1/10W	1	
R3703	ERJ6GEYJ682	M 6.8KOHM,J,1/10W	1	
R3704,05	ERJ6GEY0R00	M 0 OHM, 1/10W	2	
R3706	ERJ6GEYJ123	M 12KOHM,J,1/10W	1	
R3711	ERJ6GEYJ103	M 10KOHM,J,1/10W	1	
R3714	ERJ6ENF75R0	M 75 OHM, 1/10W	1	
R3715,16	ERJ6GEYJ184	M 180KOHM,J,1/10W	2	
R3720,21	ERJ6GEYJ472	M 4.7KOHM,J,1/10W	2	
R3723,24	ERJ6GEYJ101	M 100 OHM,J,1/10W	2	
R3725,26	ERJ6GEY0R00	M 0 OHM, 1/10W	2	
R3751	ERJ6GEY0R00	M 0 OHM, 1/10W	1	
R6001,02	ERJ3GEYJ103	M 10KOHM,J,1/16W	2	
R6003,04	TAJAAH0470JV	M 47 OHM,J,1/16W	2	D0GB470JA006
R6005-07	TAJAAH0101JV	M 100 OHM,J,1/16W	3	D0GB101JA006
R6008	ERJ3GEYJ103	M 10KOHM,J,1/16W	1	
R6009	ERJ3GEYJ472	M 4.7KOHM,J,1/16W	1	
R6010-25	TAJAAH0470JV	M 47 OHM,J,1/16W	16	D0GB470JA006
R6026	ERJ3GEYJ103	M 10KOHM,J,1/16W	1	
R6027-30	ERJ1TYJ100	M 10OHM, J, 1W	4	
R6031	ERJ3GEYJ103	M 10KOHM,J,1/16W	1	
R6032-37	ERJ3GEYJ223	M 22KOHM,J,1/16W	6	
R6038-41	ERJ3GEYJ103	M 10KOHM,J,1/16W	4	
R6042,43	ERJ3GEYJ223	M 22KOHM,J,1/16W	2	
R6044-54	TAJAAH0470JV	M 47 OHM,J,1/16W	11	D0GB470JA006
R6055,56	ERJ3GEYJ223	M 22KOHM,J,1/16W	2	
R6057-64	TAJAAH0470JV	M 47 OHM,J,1/16W	8	D0GB470JA006
R6065-72	TAJAAH0101JV	M 100 OHM,J,1/16W	8	D0GB101JA006
R6073,74	ERJ3GEYJ103	M 10KOHM,J,1/16W	2	
R6075	ERJ3GEYJ151	M 150 OHM,J,1/16W	1	
R6076	ERJ3GEY0R00	M 0 OHM, 1/16W	1	
R6079	ERJ3GEYJ102	M 1KOHM,J,1/16W	1	
R6081	ERJ3GEYJ102	M 1KOHM,J,1/16W	1	
R6082	ERJ3GEYJ223	M 22KOHM,J,1/16W	1	
R6084	ERJ3GEYJ223	M 22KOHM,J,1/16W	1	
R6085-87	ERJ3GEYJ220	M 22 OHM,J,1/16W	3	
R6089,90	ERJ3GEYJ220	M 22 OHM,J,1/16W	2	
R6091,92	ERJ3GEY0R00	M 0 OHM, 1/16W	2	
R6093-96	ERJ3GEYJ472	M 4.7KOHM,J,1/16W	4	
R6101	ERJ3GEYJ103	M 10KOHM,J,1/16W	1	
R6103	ERJ3GEYJ103	M 10KOHM,J,1/16W	1	
R6105	ERJ3GEYJ103	M 10KOHM,J,1/16W	1	
R6107,08	ERJ3GEYJ103	M 10KOHM,J,1/16W	2	
R6110,11	ERJ3GEYJ103	M 10KOHM,J,1/16W	2	
R6113,14	ERJ3GEYJ103	M 10KOHM,J,1/16W	2	
R6116,17	ERJ3GEYJ103	M 10KOHM,J,1/16W	2	

Ref. No.	Part No.	Part Name & Description	Pcs	Remarks
R6119,20	ERJ3GEYJ103	M 10KOHM,J,1/16W	2	
R6122,23	ERJ3GEYJ103	M 10KOHM,J,1/16W	2	
R6125	ERJ3GEYJ472	M 4.7KOHM,J,1/16W	1	
R6126,27	ERJ3GEYJ103	M 10KOHM,J,1/16W	2	
R6129	ERJ3GEYJ472	M 4.7KOHM,J,1/16W	1	
R6130,31	ERJ3GEYJ103	M 10KOHM,J,1/16W	2	
R6133	ERJ3GEYJ472	M 4.7KOHM,J,1/16W	1	
R6134,35	ERJ3GEYJ103	M 10KOHM,J,1/16W	2	
R6137	ERJ3GEYJ472	M 4.7KOHM,J,1/16W	1	
R6138	ERJ3GEYJ223	M 22KOHM,J,1/16W	1	
R6139	ERJ3GEYJ103	M 10KOHM,J,1/16W	1	
R6141,42	ERJ3GEYJ103	M 10KOHM,J,1/16W	2	
R6144,45	ERJ3GEYJ103	M 10KOHM,J,1/16W	2	
R6147	ERJ3GEYJ223	M 22KOHM,J,1/16W	1	
R6148	ERJ3GEYJ103	M 10KOHM,J,1/16W	1	
R6150	ERJ3GEYJ103	M 10KOHM,J,1/16W	1	
R6151	ERJ3GEYJ102	M 1KOHM,J,1/16W	1	
R6152-55	ERJ3GEYJ103	M 10KOHM,J,1/16W	4	
R6157	ERJ3GEYJ472	M 4.7KOHM,J,1/16W	1	
R6159	ERJ3GEY0R00	M 0 OHM, 1/16W	1	
R6160-99	ERJ3GEYJ220	M 22 OHM,J,1/16W	40	
R6200-10	ERJ3GEY0R00	M 0 OHM, 1/16W	11	
R6211	ERJ3GEYJ221	M 220 OHM,J,1/16W	1	
R6212	ERJ3GEY0R00	M 0 OHM, 1/16W	1	
R6213,14	TAJAAH0101JV	M 100 OHM,J,1/16W	2	D0GB101JA006
R6215-20	ERJ3GEY0R00	M 0 OHM, 1/16W	6	
R6221	TAJAAH0101JV	M 100 OHM,J,1/16W	1	D0GB101JA006
R6222,23	ERJ3GEY0R00	M 0 OHM, 1/16W	2	
R6224	ERJ3GEYJ103	M 10KOHM,J,1/16W	1	
R6225	ERJ3GEY0R00	M 0 OHM, 1/16W	1	
R6227	ERJ3GEY0R00	M 0 OHM, 1/16W	1	
R6228	D1HG4708A002	NETWORK RESISTER	1	
R6236	D1HG4708A002	NETWORK RESISTER	1	
R6244-47	TAJAAH0470JV	M 47 OHM,J,1/16W	4	D0GB470JA006
R6248,49	ERJ3GEYJ103	M 10KOHM,J,1/16W	2	
R6250-85	TAJAAH0101JV	M 100 OHM,J,1/16W	36	D0GB101JA006
R6286-90	ERJ3GEYJ103	M 10KOHM,J,1/16W	5	
R6291	ERJ3GEYJ750	M 75 OHM,J,1/16W	1	
R6292	TAJAAH0101JV	M 100 OHM,J,1/16W	1	D0GB101JA006
R6293	ERJ3GEYJ102	M 1KOHM,J,1/16W	1	
R6294	ERJ3GEYJ221	M 220 OHM,J,1/16W	1	
R6295	ERJ3GEYJ750	M 75 OHM,J,1/16W	1	
R6296	ERJ3GEY0R00	M 0 OHM, 1/16W	1	
R6297	TAJAAH0101JV	M 100 OHM,J,1/16W	1	D0GB101JA006
R6299	ERJ3EKF1001	M 1KOHM, 1/16W	1	
R6300	ERJ3GEYJ102	M 1KOHM,J,1/16W	1	
R6301	ERJ3EKF6801	M 6.8KOHM, 1/16W	1	
R6302	ERJ3EKF5101	M 5.1KOHM, 1/16W	1	
R6303	ERJ3GEYJ241	M 240 OHM,J,1/16W	1	
R6305,06	ERJ6GEY0R00	M 0 OHM, 1/10W	2	
R6308	ERJ3GEY0R00	M 0 OHM, 1/16W	1	
R6309,10	ERJ3GEYJ333	M 33KOHM,J,1/16W	2	
R6312	ERJ3GEYJ333	M 33KOHM,J,1/16W	1	
R6313	TAJAAH0101JV	M 100 OHM,J,1/16W	1	D0GB101JA006
R6314	ERJ3GEY0R00	M 0 OHM, 1/16W	1	
R6316	ERJ3GEYJ102	M 1KOHM,J,1/16W	1	
R6317-20	TAJAAH0101JV	M 100 OHM,J,1/16W	4	D0GB101JA006

Ref. No.	Part No.	Part Name & Description	Pcs	Remarks
R6321-24	ERJ3GEY0R00	M 0 OHM, 1/16W	4	
R6325	ERJ3GEYJ103	M 10KOHM,J,1/16W	1	
R6336	ERJ3GEY0R00	M 0 OHM, 1/16W	1	
R6337	ERJ6GEYJ102	M 1KOHM,J,1/10W	1	
R6347	ERJ3GEY0R00	M 0 OHM, 1/16W	1	
R6348	ERJ6GEYJ102	M 1KOHM,J,1/10W	1	
R6350,51	ERJ3GEYJ100	M 10 OHM,J,1/16W	2	
R6401-08	ERJ6GEYJ221	M 220 OHM,J,1/10W	8	
R6409	ERJ6GEYJ224	M 220KOHM,J,1/10W	1	
R6410,11	ERJ6GEYJ104	M 100KOHM,J,1/10W	2	
R6412	ERJ6GEYJ472	M 4.7KOHM,J,1/10W	1	
R6413	ERJ6GEYJ224	M 220KOHM,J,1/10W	1	
R6420-23	ERJ6GEYJ103	M 10KOHM,J,1/10W	4	
R6424	ERJ6GEYJ224	M 220KOHM,J,1/10W	1	
R6425-28	ERJ6GEYJ103	M 10KOHM,J,1/10W	4	
R6429	ERJ6GEYJ224	M 220KOHM,J,1/10W	1	
R6431	ERJ6GEY0R00	M 0 OHM, 1/10W	1	
R6433	ERJ6GEY0R00	M 0 OHM, 1/10W	1	
R6441	ERJ6ENF7502	M 75KOHM, 1/10W	1	
R6442	ERJ6ENF6982	M69.8KOHM, 1/10W	1	
R6444	ERJ6GEYJ272	M 2.7KOHM,J,1/10W	1	
R6445	ERJ6ENF2551	M2.55KOHM, 1/10W	1	
R6446	ERJ14YJ224	M 220KOHM, J,1/4W	1	
R6447	ERG2FJS223D	M 22KOHM, J, 2W	1	
R6448	ERG2FJS472D	M 82KOHM, J, 3W	1	
R6449,50	ERJ12YJ1R0	M 1 OHM, J,1/2W	2	
R6452	ERJ3GEY0R00	M 0 OHM, 1/16W	1	
R6453	ERJ6GEYJ223	M 22KOHM,J,1/10W	1	
R6454	ERDS1FJ221	C 220 OHM, J,1/2W	1	
R6455	ERJ6GEYJ332	M 3.3KOHM,J,1/10W	1	
R6456	ERJ6ENF4533	M 453KOHM, 1/10W	1	
R6457,58	ERJ6ENF1002	M 10KOHM, 1/10W	2	
R6459	ERJ14YJ104	M 100KOHM, J,1/4W	1	
R6460	ERJ6GEYJ103	M 10KOHM,J,1/10W	1	
R6461	ERG1FJS471D	M 470 OHM, J, 1W	1	
R6463	ERJ6GEYJ102	M 1KOHM,J,1/10W	1	
R6464	ERJ6GEYJ222	M 2.2KOHM,J,1/10W	1	
R6465	ERX2FJS8R2D	M 8.2 OHM, J, 2W	1	
R6466	ERJ6GEYJ102	M 1KOHM,J,1/10W	1	
R6467	ERJ6GEYJ122	M 1.2KOHM,J,1/10W	1	
R6468	ERJ6GEYJ472	M 4.7KOHM,J,1/10W	1	
R6469	ERJ6GEYJ163	M 16KOHM,J,1/10W	1	
R6470	ERJ14YJ153	M 15KOHM, 1/2W	1	
R6471	ERJ6GEYJ472	M 4.7KOHM,J,1/10W	1	
R6472	ERJ6GEYJ102	M 1KOHM,J,1/10W	1	
R6473	ERJ6GEYJ223	M 22KOHM,J,1/10W	1	
R6474	ERDS1FJ221	C 220 OHM, J,1/2W	1	
R6475	ERJ6GEYJ332	M 3.3KOHM,J,1/10W	1	
R6476	ERJ6ENF3243	M 324KOHM, 1/10W	1	
R6478	ERJ6ENF6981	M6.98KOHM, 1/10W	1	
R6479	ERJ6GEYJ104	M 100KOHM,J,1/10W	1	
R6480	ERJ6GEYJ103	M 10KOHM,J,1/10W	1	
R6482	ERJ6GEYJ472	M 4.7KOHM,J,1/10W	1	
R6483	ERJ14YJ622	M 62KOHM, J,1/4W	1	
R6484	ERJ6GEYJ472	M 4.7KOHM,J,1/10W	1	
R6485,86	ERJ6GEYJ103	M 10KOHM,J,1/10W	2	
R6487	ERJ6GEYJ472	M 4.7KOHM,J,1/10W	1	
R6488	ERJ6GEYJ103	M 10KOHM,J,1/10W	1	
R6489	ERJ6GEYJ472	M 4.7KOHM,J,1/10W	1	
R6491	ERJ6GEYJ104	M 100KOHM,J,1/10W	1	
R6492,93	ERJ6ENF2203	M 220KOHM, 1/10W	2	
R6495,96	ERJ12YJ1R0	M 1 OHM, J,1/2W	2	
R6497	ERJ6GEYJ103	M 10KOHM,J,1/10W	1	

Ref. No.	Part No.	Part Name & Description	Pcs	Remarks
R6498,99	ERX1FJS8R2D	M 8.2 OHM, J, 1W	2	
R6500	ERJ6GEYJ122	M 1.2KOHM,J,1/10W	1	
R6501	ERJ6GEYJ222	M 2.2KOHM,J,1/10W	1	
R6502	ERJ6GEYJ102	M 1KOHM,J,1/10W	1	
R6503-09	ERJ6GEYJ222	M 2.2KOHM,J,1/10W	7	
R6510	ERX3FJS2R2D	M 2.2 OHM, J, 3W	1	
R6511	ERJ6GEYJ100	M 10 OHM,J,1/10W	1	
R6512	ERJ6GEYJ471	M 470 OHM,J,1/10W	1	
R6513	ERX3FJS2R2D	M 2.2 OHM, J, 3W	1	
R6514	ERJ6GEYJ104	M 100KOHM,J,1/10W	1	
R6515	ERJ6GEYJ100	M 10 OHM,J,1/10W	1	
R6516	ERJ6GEYJ471	M 470 OHM,J,1/10W	1	
R6517	ERJ6GEYJ103	M 10KOHM,J,1/10W	1	
R6518	TAJAAH0101JV	M 100 OHM,J,1/16W	1	D0GB101JA006
R6519	ERJ6GEYJ102	M 1KOHM,J,1/10W	1	
R6520	ERJ6GEYJ151	M 150 OHM,J,1/10W	1	
R6521	ERJ6GEYJ104	M 100KOHM,J,1/10W	1	
R6522	ERJ6GEY0R00	M 0 OHM, 1/10W	1	
R6524	ERJ6ENF2001	M 2KOHM, 1/10W	1	
R6525	ERJ6GEYJ104	M 100KOHM,J,1/10W	1	
R6526	ERJ6GEYJ470	M 47 OHM,J,1/10W	1	
R6527	ERJ14YJ102	M 1KOHM, J,1/4W	1	
R6528	ERJ6GEYJ102	M 1KOHM,J,1/10W	1	
R6529	ERJ6GEYJ470	M 47 OHM,J,1/10W	1	
R6530-35	ERJ6GEYJ220	M 22 OHM,J,1/10W	6	
R6538	ERJ6GEYJ102	M 1KOHM,J,1/10W	1	
R6539	TAJAAH0101JV	M 100 OHM,J,1/16W	1	D0GB101JA006
R6540	ERJ6GEYJ104	M 100KOHM,J,1/10W	1	
R6541	ERJ6GEYJ470	M 47 OHM,J,1/10W	1	
R6542-47	ERJ6GEYJ5R6	M 5.6 OHM,J,1/10W	6	
R6550	ERG1FJS332D	M 3.3KOHM, J, 1W	1	
R6551	ERJ6GEY0R00	M 0 OHM, 1/10W	1	
R6552,53	ERJ6ENF1003	M 100KOHM, 1/10W	2	
R6554	ERJ6ENF1002	M 10KOHM, 1/10W	1	
R6555	ERJ6GEYJ104	M 100KOHM,J,1/10W	1	
R6556	ERJ6GEYJ392	M 3.9KOHM,J,1/10W	1	
R6558	ERJ6GEYJ103	M 10KOHM,J,1/10W	1	
R6559	ERJ6GEYJ222	M 2.2KOHM,J,1/10W	1	
R6560,61	ERJ6GEYJ470	M 47 OHM,J,1/10W	2	
R6562	ERJ6GEYJ102	M 1KOHM,J,1/10W	1	
R6563	ERJ6GEYJ5R6	M 5.6 OHM,J,1/10W	1	
R6565	ERJ6GEYJ103	M 10KOHM,J,1/10W	1	
R6566	TAJAAH0101JV	M 100 OHM,J,1/16W	1	D0GB101JA006
R6567,68	ERJ6GEYJ472	M 4.7KOHM,J,1/10W	2	
R6571-78	ERJ6GEYJ471	M 470 OHM,J,1/10W	8	
R6580	ERJ6GEYJ103	M 10KOHM,J,1/10W	1	
R6581	TAJAAH0101JV	M 100 OHM,J,1/16W	1	D0GB101JA006
R6582,83	ERJ6GEYJ104	M 100KOHM,J,1/10W	2	
R6584	ERJ6GEYJ223	M 22KOHM,J,1/10W	1	
R6585	ERJ6GEYJ102	M 1KOHM,J,1/10W	1	
R6586	ERJ6GEYJ103	M 10KOHM,J,1/10W	1	
R6587	ERJ6GEYJ152	M 1.5KOHM,J,1/10W	1	
R6588,89	ERJ6GEYJ103	M 10KOHM,J,1/10W	2	
R6590	ERJ6GEYJ222	M 2.2KOHM,J,1/10W	1	
R6591	ERJ6GEYJ152	M 1.5KOHM,J,1/10W	1	
R6592,93	ERJ6GEYJ224	M 220KOHM,J,1/10W	2	
R6594	ERJ6GEYJ104	M 100KOHM,J,1/10W	1	
R6595,96	ERJ6ENF5231	M5.23KOHM, 1/10W	2	
R6599,00	ERJ6GEYJ101	M 100 OHM,J,1/10W	2	
R6603	ERJ3GEY0R00	M 0 OHM, 1/16W	1	
R6604	ERJ6GEYJ101	M 100 OHM,J,1/10W	1	
R6605-07	ERJ6GEYJ224	M 220KOHM,J,1/10W	3	

Ref. No.	Part No.	Part Name & Description	Pcs	Remarks
R6608,09	ERJ12YJ1R0	M 1 OHM, J,1/2W	2	
R6610	ERJ6GEYJ104	M 100KOHM,J,1/10W	1	
R6611-14	ERJ6GEYJ5R6	M 5.6 OHM,J,1/10W	4	
R6615	ERJ6GEYJ332	M 3.3KOHM,J,1/10W	1	
R6616	ERDS1FJ221	C 220 OHM, J,1/2W	1	
R6617,18	ERJ6GEYJ222	M 2.2KOHM,J,1/10W	2	
R6619,20	ERJ6GEYJ240	M 24 OHM,J,1/10W	2	
R6621	ERJ6ENF1543	M 154KOHM, 1/10W	1	
R6623	ERJ6GEYJ103	M 10KOHM,J,1/10W	1	
R6624	ERJ6GEYJ100	M 10 OHM,J,1/10W	1	
R6625	ERJ6GEYJ103	M 10KOHM,J,1/10W	1	
R6626	ERJ6GEYJ100	M 10 OHM,J,1/10W	1	
R6627,28	TAJAAH0101JV	M 100 OHM,J,1/16W	2	D0GB101JA006
R6629	ERJ6ENF2202	M 2.2KOHM, 1/10W	1	
R6636-39	ERJ12YJ1R0	M 1 OHM, J,1/2W	4	
R6641,42	ERJ6GEYJ5R6	M 5.6 OHM,J,1/10W	2	
R6643,44	ERJ12YJ220	M 22 OHM,J, 1/2W	2	
R6645,46	ERJ6GEYJ151	M 150 OHM,J,1/10W	2	
R6647,48	ERJ6GEYJ5R6	M 5.6 OHM,J,1/10W	2	
R6649-54	ERJ6GEYJ680	M 68 OHM,J,1/10W	6	
R6655	ERJ6GEYJ101	M 100 OHM,J,1/10W	1	
R6656	ERJ6GEYJ104	M 100KOHM,J,1/10W	1	
R6658	ERJ3GEY0R00	M 0 OHM, 1/16W	1	
R6659,60	TAJAAH0101JV	M 100 OHM,J,1/16W	2	D0GB101JA006
R6661,62	ERJ6GEYJ470	M 47 OHM,J,1/10W	2	
R6663	ERJ3GEYJ473	M 47KOHM,J,1/16W	1	
R6664	ERJ3GEYJ471	M 470 OHM,J,1/16W	1	
R6665,66	ERJ6GEYJ680	M 68 OHM,J,1/10W	2	
R6667,68	TAJAAH0101JV	M 100 OHM,J,1/16W	2	D0GB101JA006
R6669	ERJ3GEYJ473	M 47KOHM,J,1/16W	1	
R6670	ERJ3GEYJ471	M 470 OHM,J,1/16W	1	
R6671	ERG3FJS821D	M 820 OHM, J, 3W	1	
R6672	ERJ12YJ101	M 100 OHM,J, 1/2W	1	
R6673	ERG1SJ100P	M 10 OHM, J, 1W	1	
R6675	ERJ3GEYJ473	M 47KOHM,J,1/16W	1	
R6676	ERJ3GEYJ471	M 470 OHM,J,1/16W	1	
R6678,79	ERJ3GEYJ471	M 470 OHM,J,1/16W	2	
R6680,81	ERJ3GEYJ473	M 47KOHM,J,1/16W	2	
R6682-85	ERJ3GEYJ471	M 470 OHM,J,1/16W	4	
R6686-89	ERJ3GEYJ473	M 47KOHM,J,1/16W	4	
R6690,91	ERJ3GEYJ471	M 470 OHM,J,1/16W	2	
R6692,93	ERJ3GEYJ473	M 47KOHM,J,1/16W	2	
R6694,95	ERJ3GEYJ471	M 470 OHM,J,1/16W	2	
R6697,98	ERJ3GEYJ473	M 47KOHM,J,1/16W	2	
R6701	ERJ6GEYJ104	M 100KOHM,J,1/10W	1	
R6711-14	ERJ6GEYJ5R6	M 5.6 OHM,J,1/10W	4	
R6719,20	ERJ6GEYJ240	M 24 OHM,J,1/10W	2	
R6723	ERJ6GEYJ103	M 10KOHM,J,1/10W	1	
R6724	ERJ6GEYJ100	M 10 OHM,J,1/10W	1	
R6725	ERJ6GEYJ103	M 10KOHM,J,1/10W	1	
R6726	ERJ6GEYJ100	M 10 OHM,J,1/10W	1	
R6727,28	TAJAAH0101JV	M 100 OHM,J,1/16W	2	D0GB101JA006

Ref. No.	Part No.	Part Name & Description	Pcs	Remarks
R6736-39	ERJ12YJ1R0	M 1 OHM, J,1/2W	4	
R6741,42	ERJ6GEYJ5R6	M 5.6 OHM,J,1/10W	2	
R6743,44	ERJ12YJ220	M 22 OHM,J, 1/2W	2	
R6747,48	ERJ6GEYJ5R6	M 5.6 OHM,J,1/10W	2	
R6755	ERJ6GEYJ101	M 100 OHM,J,1/10W	1	
R6756	ERJ6GEYJ104	M 100KOHM,J,1/10W	1	
R6759,60	TAJAAH0101JV	M 100 OHM,J,1/16W	2	D0GB101JA006
R6761	ERJ12YJ470	M 47 OHM, J,1/2W	1	
R6762-64	ERJ6GEYJ224	M 220KOHM,J,1/10W	3	
R6765	ERJ6GEYJ103	M 10KOHM,J,1/10W	1	
R6766-68	ERJ6GEYJ223	M 22KOHM,J,1/10W	3	
R6769,70	ERJ6GEYJ104	M 100KOHM,J,1/10W	2	
R6771	ERJ6GEYJ103	M 10KOHM,J,1/10W	1	
R6772	ERJ6GEYJ222	M 2.2KOHM,J,1/10W	1	
R6773	ERJ6GEYJ272	M 2.7KOHM,J,1/10W	1	
R6777,78	ERX3FJSR22D	M 2.2 OHM, J, 3W	2	
R6779,80	ERJ6GEYJ101	M 100 OHM,J,1/10W	2	
R6781	ERJ6GEYJ222	M 2.2KOHM,J,1/10W	1	
R6782,83	TAJAAH0101JV	M 100 OHM,J,1/16W	2	D0GB101JA006
R6784	ERJ6GEYJ224	M 220KOHM,J,1/10W	1	
R6785,86	ERJ6GEYJ470	M 47 OHM,J,1/10W	2	
R6787	ERJ6GEYJ101	M 100 OHM,J,1/10W	1	
R6788	ERJ6GEYJ103	M 10KOHM,J,1/10W	1	
R6789	ERJ6GEYJ102	M 1KOHM,J,1/10W	1	
R6801-03	ERJ3GEYJ471	M 470 OHM,J,1/16W	3	
R6804-06	ERJ3GEYJ473	M 47KOHM,J,1/16W	3	
R6807-09	ERJ3GEYJ471	M 470 OHM,J,1/16W	3	
R6810-12	ERJ3GEYJ473	M 47KOHM,J,1/16W	3	
R6818,19	ERJ6GEYJ104	M 100KOHM,J,1/10W	2	
R6820	ERJ6GEYJ223	M 22KOHM,J,1/10W	1	
R6821	ERJ6GEYJ103	M 10KOHM,J,1/10W	1	
R6823	ERJ6GEYJ152	M 1.5KOHM,J,1/10W	1	
R6824	ERJ6GEYJ103	M 10KOHM,J,1/10W	1	
R6825	ERJ6GEYJ222	M 2.2KOHM,J,1/10W	1	
R6826	ERJ6GEYJ152	M 1.5KOHM,J,1/10W	1	
R6827	ERJ6GEYJ101	M 100 OHM,J,1/10W	1	
R7102,03	ERJ14YJ220	M 22 OHM, J,1/4W	2	
R7106,07	ERJ14YJ220	M 22 OHM, J,1/4W	2	
R7110,11	ERJ14YJ220	M 22 OHM, J,1/4W	2	
R7117	ERJ6GEYJ224	M 220KOHM,J,1/10W	1	
R7119	ERJ6ENF1651	M1.65KOHM, 1/10W	1	TH-42PA30H/M/R
R7120	ERJ6GEYJ102	M 1KOHM,J,1/10W	1	TH-42PA30H/M/R
R7125	ERJ6GEYJ102	M 1KOHM,J,1/10W	1	
R7126-28	TAJAAH0470JV	M 47 OHM,J,1/16W	3	TH-42PA30H/M/R
R7126-28	TAJAAH0101JV	M 100 OHM,J,1/16W	3	TH-37PA30A/H/M/R
R7130	ERJ3GEY0R00	M 0 OHM, 1/16W	1	
R7132	ERJ3GEY0R00	M 0 OHM, 1/16W	1	
R7136-41	ERJ14YJ220	M 22 OHM, J,1/4W	6	
R7142-59	TAJAAH0470JV	M 47 OHM,J,1/16W	18	TH-42PA30H/M/R
R7142-59	TAJAAH0101JV	M 100 OHM,J,1/16W	18	TH-37PA30A/H/M/R
R7161	ERJ6GEY0R00	M 0 OHM, 1/10W	1	

Ref. No.	Part No.	Part Name & Description	Pcs	Remarks
R7162,63	ERJ3GEYJ181	M 180 OHM,J,1/16W	2	TH-42PA30H/M/R
R7162,63	ERJ3GEYJ221	M 220 OHM,J,1/16W	2	TH-37PA30A/H/M/R
R7166,67	ERJ3GEYJ151	M 150 OHM,J,1/16W	2	TH-42PA30H/M/R
R7166,67	ERJ3GEYJ181	M 180 OHM,J,1/16W	2	TH-37PA30A/H/M/R
R7170,71	ERJ3GEYJ121	M 120 OHM,J,1/16W	2	TH-42PA30H/M/R
R7170,71	TAJAAH0101JV	M 100 OHM,J,1/16W	2	TH-37PA30A/H/M/R
R7178	ERJ3GEY0R00	M 0 OHM, 1/16W	1	
R7187	ERJ6GEYJ223	M 22KOHM,J,1/10W	1	
R7188	ERJ6GEYJ104	M 100KOHM,J,1/10W	1	
R7189	ERJ6GEY0R00	M 0 OHM, 1/10W	1	
R7192	ERJ6GEY0R00	M 0 OHM, 1/10W	1	
R7202,03	ERJ14YJ220	M 22 OHM, J,1/4W	2	
R7206,07	ERJ14YJ220	M 22 OHM, J,1/4W	2	
R7210,11	ERJ14YJ220	M 22 OHM, J,1/4W	2	
R7214,15	ERJ14YJ220	M 22 OHM, J,1/4W	2	
R7217	ERJ6GEYJ224	M 220KOHM,J,1/10W	1	
R7221-24	ERJ6GEYJ103	M 10KOHM,J,1/10W	4	
R7225	ERJ6GEYJ102	M 1KOHM,J,1/10W	1	
R7226-29	TAJAAH0470JV	M 47 OHM,J,1/16W	4	TH-42PA30H/M/R
R7226-29	TAJAAH0101JV	M 100 OHM,J,1/16W	4	TH-37PA30A/H/M/R
R7230	ERJ3GEY0R00	M 0 OHM, 1/16W	1	
R7232	ERJ3GEY0R00	M 0 OHM, 1/16W	1	
R7233-40	ERJ14YJ220	M 22 OHM, J,1/4W	8	
R7241-64	TAJAAH0470JV	M 47 OHM,J,1/16W	24	TH-42PA30H/M/R
R7241-64	TAJAAH0101JV	M 100 OHM,J,1/16W	24	TH-37PA30A/H/M/R
R7278	ERJ3GEY0R00	M 0 OHM, 1/16W	1	
R7285	ERJ6GEY0R00	M 0 OHM, 1/10W	1	
R7289,90	TAJAAH0101JV	M 100 OHM,J,1/16W	2	TH-42PA30H/M/R
R7289,90	ERJ3GEYJ121	M 120 OHM,J,1/16W	2	TH-37PA30A/H/M/R
R7293	ERJ3GEYJ151	M 150 OHM,J,1/16W	1	TH-42PA30H/M/R
R7293	TAJAAH0101JV	M 100 OHM,J,1/16W	1	TH-37PA30A/H/M/R
R7296	ERJ3GEYJ151	M 150 OHM,J,1/16W	1	TH-42PA30H/M/R
R7296	TAJAAH0101JV	M 100 OHM,J,1/16W	1	TH-37PA30A/H/M/R
R7297	ERJ3GEYJ181	M 180 OHM,J,1/16W	1	
R7300	ERJ3GEYJ181	M 180 OHM,J,1/16W	1	
R7301	ERJ3GEYJ221	M 220 OHM,J,1/16W	1	
R7304	ERJ3GEYJ221	M 220 OHM,J,1/16W	1	
R7305	ERJ6GEYJ223	M 22KOHM,J,1/10W	1	
R7306	ERJ6GEYJ104	M 100KOHM,J,1/10W	1	
R7309,10	ERJ6GEY0R00	M 0 OHM, 1/10W	2	
R7501	ERJ6ENF8200	M 820 OHM, 1/10W	1	
R7502	ERJ6ENF1871	M1.87KOHM, 1/10W	1	
R7503	ERJ6ENF8060	M 806 OHM, 1/10W	1	
R7504	ERJ6ENF3921	M3.92KOHM, 1/10W	1	
R7505	ERJ6GEYJ223	M 22KOHM,J,1/10W	1	
R7506	ERJ6GEYJ222	M 2.2KOHM,J,1/10W	1	
R7507	ERJ6ENF8200	M 820 OHM, 1/10W	1	
R7508	ERJ6ENF1871	M1.87KOHM, 1/10W	1	
R7509	ERJ6ENF8060	M 806 OHM, 1/10W	1	
R7510	ERJ6ENF1001	M 1KOHM, 1/10W	1	
R7511	ERJ6ENF8200	M 820 OHM, 1/10W	1	
R7512	ERJ6ENF6040	M 604 OHM, 1/10W	1	
R7514	ERJ6GEYJ222	M 2.2KOHM,J,1/10W	1	
R7515,16	ERJ6GEYJ223	M 22KOHM,J,1/10W	2	

Ref. No.	Part No.	Part Name & Description	Pcs	Remarks
R7517	ERJ6GEYJ222	M 2.2KOHM,J,1/10W	1	
R7518	ERJ6GEYJ223	M 22KOHM,J,1/10W	1	
R7519	ERJ6GEYJ123	M 12KOHM,J,1/10W	1	
R7520	ERJ6GEYJ102	M 1KOHM,J,1/10W	1	
R7522,23	ERJ6GEY0R00	M 0 OHM, 1/10W	2	
R7525-27	ERJ6GEYJ472	M 4.7KOHM,J,1/10W	3	
R7529-31	ERJ6GEY0R00	M 0 OHM, 1/10W	3	
R7532	ERJ6GEYJ471	M 470 OHM,J,1/10W	1	
R7533	ERJ6GEYJ102	M 1KOHM,J,1/10W	1	
R7534	ERJ6GEYJ101	M 100 OHM,J,1/10W	1	
R7535	ERJ6GEYJ221	M 220 OHM,J,1/10W	1	
R7536	ERJ6GEYJ471	M 470 OHM,J,1/10W	1	
R7537,38	ERJ6GEYJ103	M 10KOHM,J,1/10W	2	
R7539	ERJ6GEYJ222	M 2.2KOHM,J,1/10W	1	
R7540	ERJ6GEYJ472	M 4.7KOHM,J,1/10W	1	
R7541	ERJ6GEYJ222	M 2.2KOHM,J,1/10W	1	
R7542	ERJ6GEYJ471	M 470 OHM,J,1/10W	1	
R7543	ERJ6GEYJ102	M 1KOHM,J,1/10W	1	
R7544	ERJ6GEYJ222	M 2.2KOHM,J,1/10W	1	
R7545,46	ERJ6ENF2201	M 2.2KOHM, 1/10W	2	
R7547	ERJ6GEYJ681	M 680 OHM,J,1/10W	1	
R7548	ERJ6GEYJ222	M 2.2KOHM,J,1/10W	1	
R7549	ERJ6GEYJ104	M 100KOHM,J,1/10W	1	
R7550	ERJ6GEYJ221	M 220 OHM,J,1/10W	1	
R7551	ERJ6ENF7151	M7.15KOHM, 1/10W	1	
R7552	ERJ6ENF8060	M 806 OHM, 1/10W	1	
R7557	ERJ6GEYJ104	M 100KOHM,J,1/10W	1	
R7558	ERJ6GEYJ102	M 1KOHM,J,1/10W	1	
R7559	ERJ6ENF3301	M 3.3KOHM, 1/10W	1	
R7560	ERJ6GEYJ473	M 47KOHM,J,1/10W	1	
R7579	ERJ6GEYJ104	M 100KOHM,J,1/10W	1	
R7580	ERJ6GEY0R00	M 0 OHM, 1/10W	1	
R7583	ERJ6GEYJ102	M 1KOHM,J,1/10W	1	
R7584	ERJ6GEYJ512	M 5.1KOHM,J,1/10W	1	
R7585	ERJ6ENF8202	M 82KOHM, 1/10W	1	
R7586	ERJ6ENF1371	M1.37KOHM, 1/10W	1	
R7588	ERJ6GEY0R00	M 0 OHM, 1/10W	1	
R7590	ERJ6GEY0R00	M 0 OHM, 1/10W	1	
R7591	ERJ6GEYJ563	M 56KOHM,J,1/10W	1	
R7595	ERJ6GEY0R00	M 0 OHM, 1/10W	1	
R9018-20	ERJ3GEY0R00	M 0 OHM, 1/16W	3	
R9022-24	ERJ3GEYJ750	M 75 OHM,J,1/16W	3	
R9028	ERJ3GEYJ100	M 10 OHM,J,1/16W	1	
R9029	ERJ3GEYJ332	M 3.3KOHM,J,1/16W	1	
R9064	ERJ3GEY0R00	M 0 OHM, 1/16W	1	
R9104,05	ERJ3GEY0R00	M 0 OHM, 1/16W	2	
R9109,10	ERJ6GEY0R00	M 0 OHM, 1/10W	2	
R9111,12	ERJ3GEYJ330	M 33 OHM,J,1/16W	2	
R9113	ERJ3GEY0R00	M 0 OHM, 1/16W	1	
R9114,15	ERJ6GEY0R00	M 0 OHM, 1/10W	2	
R9118	ERJ6GEY0R00	M 0 OHM, 1/10W	1	
R9122	ERJ6GEY0R00	M 0 OHM, 1/10W	1	
R9127-29	EXB2HVR000	RESISTOR ARRAY	3	
R9130-32	TAJAAH0101JV	M 100 OHM,J,1/16W	3	D0GB101JA006
R9153,54	EXB2HVR000	RESISTOR ARRAY	2	
R9157	EXB2HVR000	RESISTOR ARRAY	1	
R9167,68	ERJ3GEYJ103	M 10KOHM,J,1/16W	2	
R9171,72	ERJ3GEYJ103	M 10KOHM,J,1/16W	2	
R9176	TAJAAH0101JV	M 100 OHM,J,1/16W	1	D0GB101JA006
R9177	ERJ3GEYJ220	M 22 OHM,J,1/16W	1	

Ref. No.	Part No.	Part Name & Description	Pcs	Remarks
R9178,79	ERJ3GEY0R00	M 0 OHM, 1/16W	2	
R9180	ERJ3GEYJ100	M 10 OHM,J,1/16W	1	
R9182	ERJ3GEY0R00	M 0 OHM, 1/16W	1	
R9183	ERJ3GEYJ222	M 2.2KOHM,J,1/16W	1	
R9187	ERJ3GEYJ103	M 10KOHM,J,1/16W	1	
R9190	ERJ3GEYJ103	M 10KOHM,J,1/16W	1	
R9199	ERJ3GEYJ103	M 10KOHM,J,1/16W	1	
R9200	ERJ3GEYJ332	M 3.3KOHM,J,1/16W	1	
R9202	ERJ3GEYJ103	M 10KOHM,J,1/16W	1	
R9203-05	ERJ3GEY0R00	M 0 OHM, 1/16W	3	
R9207,08	ERJ3GEYJ100	M 10 OHM,J,1/16W	2	
R9216	ERJ3GEYJ103	M 10KOHM,J,1/16W	1	
R9218	ERJ3GEY0R00	M 0 OHM, 1/16W	1	
R9219	ERJ3GEYJ330	M 33 OHM,J,1/16W	1	
R9220,21	ERJ3GEYJ151	M 150 OHM,J,1/16W	2	
R9224	ERJ3GEYJ222	M 2.2KOHM,J,1/16W	1	
R9226	ERJ3GEYJ103	M 10KOHM,J,1/16W	1	
R9228	ERJ3GEYJ151	M 150 OHM,J,1/16W	1	
R9229,30	ERJ3GEY0R00	M 0 OHM, 1/16W	2	
R9231	ERJ3GEYJ272	M 2.7KOHM,J,1/16W	1	
R9232	ERJ3GEYJ331	M 330 OHM,J,1/16W	1	
R9234	ERJ3GEYJ103	M 10KOHM,J,1/16W	1	
R9236	ERJ3GEYJ103	M 10KOHM,J,1/16W	1	
R9240	ERJ3GEYJ330	M 33 OHM,J,1/16W	1	
R9244,45	ERJ3GEY0R00	M 0 OHM, 1/16W	2	
R9247	ERJ3GEY0R00	M 0 OHM, 1/16W	1	
R9302	ERJ3GEY0R00	M 0 OHM, 1/16W	1	
R9303	EXB38V103J	RESISTOR ARRAY	1	
R9306	ERJ3GEYJ103	M 10KOHM,J,1/16W	1	
R9308	ERJ3GEYJ103	M 10KOHM,J,1/16W	1	
R9310	ERJ3GEYJ223	M 22KOHM,J,1/16W	1	
R9311	ERJ3GEYJ103	M 10KOHM,J,1/16W	1	
R9315	ERJ3GEYJ103	M 10KOHM,J,1/16W	1	
R9322	ERJ3GEYJ103	M 10KOHM,J,1/16W	1	
R9330	ERJ3GEYJ100	M 10 OHM,J,1/16W	1	
R9333	TAJAAH0470JV	M 47 OHM,J,1/16W	1	D0GB470JA006
R9335	ERJ3GEYJ220	M 22 OHM,J,1/16W	1	
R9336	ERJ3GEYJ100	M 10 OHM,J,1/16W	1	
R9337	ERJ3GEYJ220	M 22 OHM,J,1/16W	1	
R9339	ERJ3GEYJ103	M 10KOHM,J,1/16W	1	
R9349	EXB38V470J	RESISTOR ARRAY	1	
R9352	ERJ3GEYJ100	M 10 OHM,J,1/16W	1	
R9353	EXB38V470J	RESISTOR ARRAY	1	
R9355	ERJ3GEYJ100	M 10 OHM,J,1/16W	1	
R9357	EXB38V470J	RESISTOR ARRAY	1	
R9362	ERJ3GEYJ103	M 10KOHM,J,1/16W	1	
R9365	EXB38V470J	RESISTOR ARRAY	1	
R9367	ERJ3GEY0R00	M 0 OHM, 1/16W	1	
R9368	EXB38V470J	RESISTOR ARRAY	1	
R9371	ERJ3GEY0R00	M 0 OHM, 1/16W	1	
R9373	ERJ3GEY0R00	M 0 OHM, 1/16W	1	
R9376	TAJAAH0470JV	M 47 OHM,J,1/16W	1	D0GB470JA006
R9380	EXB38V151J	RESISTOR ARRAY	1	
R9411	ERJ3GEYJ472	M 4.7KOHM,J,1/16W	1	
R9413	ERJ3GEYJ331	M 330 OHM,J,1/16W	1	
R9415	ERJ3GEYJ472	M 4.7KOHM,J,1/16W	1	
R9417	ERJ6GEY0R00	M 0 OHM, 1/10W	1	
R9420	ERJ3GEYJ473	M 47KOHM,J,1/16W	1	
R9449	ERJ6GEY0R00	M 0 OHM, 1/10W	1	
R9455	ERJ3GEY0R00	M 0 OHM, 1/16W	1	
R9459	ERJ3GEY0R00	M 0 OHM, 1/16W	1	
R9460-62	ERJ3GEYJ100	M 10 OHM,J,1/16W	3	
R9465,66	EXB2HVR000	RESISTOR ARRAY	2	
R9468	EXB2HVR000	RESISTOR ARRAY	1	
R9469	ERJ3GEY0R00	M 0 OHM, 1/16W	1	
R9475	ERJ3GEYJ102	M 1KOHM,J,1/16W	1	
R9476	TAJAAH0101JV	M 100 OHM,J,1/16W	1	D0GB101JA006

Ref. No.	Part No.	Part Name & Description	Pcs	Remarks
R9477,78	ERJ3GEYJ103	M 10KOHM,J,1/16W	2	
R9479	TAJAAH0101JV	M 100 OHM,J,1/16W	1	D0GB101JA006
R9480,81	ERJ6ENF1001	M 1KOHM, 1/10W	2	
R9483	ERJ3GEY0R00	M 0 OHM, 1/16W	1	
R9484,85	ERJ3GEYJ102	M 1KOHM,J,1/16W	2	
R9486,87	ERJ6ENF1001	M 1KOHM, 1/10W	2	
R9488,89	ERJ3GEYJ100	M 10 OHM,J,1/16W	2	
R9490,91	ERJ3GEYJ220	M 22 OHM,J,1/16W	2	
R9501	ERJ3GEY0R00	M 0 OHM, 1/16W	1	
R9503	ERJ3GEY0R00	M 0 OHM, 1/16W	1	
R9513-15	ERJ3GEYJ100	M 10 OHM,J,1/16W	3	
R9525,26	EXB38V470J	RESISTOR ARRAY	2	
R9530	EXB38V470J	RESISTOR ARRAY	1	
R9532	TAJAAH0470JV	M 47 OHM,J,1/16W	1	D0GB470JA006
R9535	TAJAAH0470JV	M 47 OHM,J,1/16W	1	D0GB470JA006
R9537	TAJAAH0470JV	M 47 OHM,J,1/16W	1	D0GB470JA006
R9538	ERJ3GEYJ220	M 22 OHM,J,1/16W	1	
R9540	EXB38V470J	RESISTOR ARRAY	1	
R9541	ERJ3GEYJ220	M 22 OHM,J,1/16W	1	
R9547	TAJAAH0470JV	M 47 OHM,J,1/16W	1	D0GB470JA006
R9548	ERJ3GEY0R00	M 0 OHM, 1/16W	1	
R9551	EXB38V470J	RESISTOR ARRAY	1	
R9553	EXB38V680J	RESISTOR ARRAY	1	
R9558	ERJ3GEYJ151	M 150 OHM,J,1/16W	1	
R9559	EXB38V470J	RESISTOR ARRAY	1	
R9560	ERJ3GEYJ151	M 150 OHM,J,1/16W	1	
R9561	ERJ3GEYJ330	M 33 OHM,J,1/16W	1	
R9562	ERJ3GEYJ151	M 150 OHM,J,1/16W	1	
R9564	ERJ3GEY0R00	M 0 OHM, 1/16W	1	
R9570	ERJ3GEY0R00	M 0 OHM, 1/16W	1	
R9577	TAJAAH0101JV	M 100 OHM,J,1/16W	1	D0GB101JA006
R9579-81	ERJ3GEY0R00	M 0 OHM, 1/16W	3	
R9585,86	ERJ3GEYJ472	M 4.7KOHM,J,1/16W	2	
R9592	ERJ3GEYJ104	M 100KOHM,J,1/16W	1	
R9593	ERJ3GEYJ103	M 10KOHM,J,1/16W	1	
R9594	TAJAAH0101JV	M 100 OHM,J,1/16W	1	D0GB101JA006
R9595	ERJ3GEYJ104	M 100KOHM,J,1/16W	1	
R9596	ERJ3GEYJ103	M 10KOHM,J,1/16W	1	
R9597	TAJAAH0101JV	M 100 OHM,J,1/16W	1	D0GB101JA006
R9598,99	EXB38VR000	RESISTOR ARRAY	2	
R9600-05	ERJ3GEY0R00	M 0 OHM, 1/16W	6	
R9608,09	ERJ3GEY0R00	M 0 OHM, 1/16W	2	
R9611-15	ERJ3GEY0R00	M 0 OHM, 1/16W	5	
R9618	ERJ3GEYJ223	M 22KOHM,J,1/16W	1	
R9620,21	ERJ3GEYJ103	M 10KOHM,J,1/16W	2	
R9624	TAJAAH0101JV	M 100 OHM,J,1/16W	1	D0GB101JA006
R9625	ERJ3GEYJ561	M 560 OHM,J,1/16W	1	
R9627,28	ERJ3GEY0R00	M 0 OHM, 1/16W	2	
R9631-35	ERJ3GEY0R00	M 0 OHM, 1/16W	5	
R9640,41	ERJ3GEY0R00	M 0 OHM, 1/16W	2	
R9642	ERJ3GEYJ472	M 4.7KOHM,J,1/16W	1	
R9643	ERJ3GEY0R00	M 0 OHM, 1/16W	1	
R9648	ERJ3GEYJ103	M 10KOHM,J,1/16W	1	
R9650-53	EXB38V103J	RESISTOR ARRAY	4	
R9654,55	ERJ3GEY0R00	M 0 OHM, 1/16W	2	
R9670-72	ERJ3GEY0R00	M 0 OHM, 1/16W	3	

Ref. No.	Part No.	Part Name & Description	Pcs	Remarks
R9679	ERJ3GEY0R00	M 0 OHM, 1/16W	1	
R9683	ERJ3GEY0R00	M 0 OHM, 1/16W	1	
R9686-88	ERJ3GEY0R00	M 0 OHM, 1/16W	3	
R9700	ERJ3GEY0R00	M 0 OHM, 1/16W	1	
R9701	TAJAAH0101JV	M 100 OHM,J,1/16W	1	D0GB101JA006
R9702	TAJAAH0680JV	M 68 OHM,J,1/16W	1	D0GB680JA006
R9703-08	TAJAAH0101JV	M 100 OHM,J,1/16W	6	D0GB101JA006
R9709	ERJ3GEYJ473	M 47KOHM,J,1/16W	1	
R9710-16	ERJ3GEYJ151	M 150 OHM,J,1/16W	7	
R9717,18	ERJ3GEY0R00	M 0 OHM, 1/16W	2	
R9719-24	ERJ3GEYJ151	M 150 OHM,J,1/16W	6	
R9725	ERJ3GEYJ823	M 82KOHM,J,1/16W	1	
R9726	ERJ3GEY0R00	M 0 OHM, 1/16W	1	
R9727	EXB38VR000	RESISTOR ARRAY	1	
R9728	ERJ3GEY0R00	M 0 OHM, 1/16W	1	
R9730-32	TAJAAH0101JV	M 100 OHM,J,1/16W	3	D0GB101JA006
R9733	ERJ3GEYJ562	M 5.6KOHM,J,1/16W	1	
R9734	ERJ3GEYJ102	M 1KOHM,J,1/16W	1	
R9735	ERJ3GEYJ103	M 10KOHM,J,1/16W	1	
R9736	ERJ3GEYJ272	M 2.7KOHM,J,1/16W	1	
R9737	ERJ3GEYJ102	M 1KOHM,J,1/16W	1	
R9738,39	ERJ3GEYJ272	M 2.7KOHM,J,1/16W	2	
R9741	ERJ3GEYJ472	M 4.7KOHM,J,1/16W	1	
R9743-45	ERJ3GEYJ103	M 10KOHM,J,1/16W	3	
R9747	ERJ3GEYJ102	M 1KOHM,J,1/16W	1	
R9748	ERJ3GEY0R00	M 0 OHM, 1/16W	1	
R9749	ERJ3GEYJ472	M 4.7KOHM,J,1/16W	1	
R9750	ERJ3GEYJ102	M 1KOHM,J,1/16W	1	
R9751	EXB38V103J	RESISTOR ARRAY	1	
R9752	TAJAAH0101JV	M 100 OHM,J,1/16W	1	D0GB101JA006
R9754	EXB38V272J	RESISTOR ARRAY	1	
R9755,56	ERJ3GEYJ272	M 2.7KOHM,J,1/16W	2	
R9757	ERJ3GEYJ560	M 56 OHM,J,1/16W	1	
R9758	ERJ3GEYJ103	M 10KOHM,J,1/16W	1	
R9759	ERJ3GEYJ560	M 56 OHM,J,1/16W	1	
R9760	ERJ3GEY0R00	M 0 OHM, 1/16W	1	
R9761	ERJ3GEYJ102	M 1KOHM,J,1/16W	1	
R9762	EXB38V103J	RESISTOR ARRAY	1	
R9763	ERJ3GEYJ103	M 10KOHM,J,1/16W	1	
R9765	TAJAAH0101JV	M 100 OHM,J,1/16W	1	D0GB101JA006
R9766	ERJ3GEY0R00	M 0 OHM, 1/16W	1	
R9767	TAJAAH0101JV	M 100 OHM,J,1/16W	1	D0GB101JA006
R9768	EXB38V470J	RESISTOR ARRAY	1	
R9769	EXB38VR000	RESISTOR ARRAY	1	
R9770	ERJ3GEYJ103	M 10KOHM,J,1/16W	1	
R9771	EXB38VR000	RESISTOR ARRAY	1	
R9773	TAJAAH0101JV	M 100 OHM,J,1/16W	1	D0GB101JA006
R9774-76	ERJ3GEYJ103	M 10KOHM,J,1/16W	3	
R9777	ERJ3GEYJ471	M 470 OHM,J,1/16W	1	
R9779	ERJ3GEYJ103	M 10KOHM,J,1/16W	1	
R9781	ERJ3GEYJ103	M 10KOHM,J,1/16W	1	
R9782	ERJ3GEYJ562	M 5.6KOHM,J,1/16W	1	
R9783,84	ERJ3GEYJ560	M 56 OHM,J,1/16W	2	
R9785,86	EXB38VR000	RESISTOR ARRAY	2	
R9787	ERJ3GEYJ102	M 1KOHM,J,1/16W	1	
R9788	ERJ3GEY0R00	M 0 OHM, 1/16W	1	
R9789	ERJ3GEYJ471	M 470 OHM,J,1/16W	1	
R9790	ERJ3GEYJ152	M 1.5KOHM,J,1/16W	1	
R9791	ERJ3GEYJ472	M 4.7KOHM,J,1/16W	1	
R9794	ERJ3GEYJ272	M 2.7KOHM,J,1/16W	1	
R9795	ERJ3GEYJ105	M 1MOHM,J,1/16W	1	
R9798,99	ERJ3GEYJ562	M 5.6KOHM,J,1/16W	2	
R9800	ERJ3GEY0R00	M 0 OHM, 1/16W	1	

Ref. No.	Part No.	Part Name & Description	Pcs	Remarks
R9803,04	TAJAAH0101JV	M 100 OHM,J,1/16W	2	D0GB101JA006
R9805	ERJ3GEY0R00	M 0 OHM, 1/16W	1	
R9806	ERJ3GEYJ102	M 1KOHM,J,1/16W	1	
R9809	ERJ3GEYJ103	M 10KOHM,J,1/16W	1	
R9810,11	ERJ3GEY0R00	M 0 OHM, 1/16W	2	
R9814	ERJ3GEYJ100	M 10 OHM,J,1/16W	1	
R9816	ERJ3GEYJ102	M 1KOHM,J,1/16W	1	
R9817	ERJ3GEY0R00	M 0 OHM, 1/16W	1	
R9818,19	TAJAAH0101JV	M 100 OHM,J,1/16W	2	D0GB101JA006
R9820	ERJ3GEYJ472	M 4.7KOHM,J,1/16W	1	
R9823,24	ERJ3GEY0R00	M 0 OHM, 1/16W	2	
R9825	ERJ3GEYJ102	M 1KOHM,J,1/16W	1	
R9826	TAJAAH0101JV	M 100 OHM,J,1/16W	1	D0GB101JA006
R9827	ERJ3GEYJ332	M 3.3KOHM,J,1/16W	1	
R9829	ERJ3GEYJ393	M 39KOHM,J,1/16W	1	
R9832	ERJ3GEYJ103	M 10KOHM,J,1/16W	1	
R9833	ERJ3GEYJ393	M 39KOHM,J,1/16W	1	
R9834,35	ERJ3GEYJ560	M 56 OHM,J,1/16W	2	
R9836	TAJAAH0101JV	M 100 OHM,J,1/16W	1	D0GB101JA006
R9837	ERJ3GEYJ103	M 10KOHM,J,1/16W	1	
R9838	ERJ3GEY0R00	M 0 OHM, 1/16W	1	
R9839,40	TAJAAH0101JV	M 100 OHM,J,1/16W	2	D0GB101JA006
R9841,42	ERJ3GEYJ560	M 56 OHM,J,1/16W	2	
R9843,44	ERJ3GEYJ103	M 10KOHM,J,1/16W	2	
R9846,47	ERJ3GEYJ103	M 10KOHM,J,1/16W	2	
R9848	EXB38V103J	RESISTOR ARRAY	1	
R9849,50	TAJAAH0101JV	M 100 OHM,J,1/16W	2	D0GB101JA006
R9851	ERJ3GEYJ223	M 22KOHM,J,1/16W	1	
R9852,53	ERJ3GEYJ103	M 10KOHM,J,1/16W	2	
R9855	ERJ3GEYJ393	M 39KOHM,J,1/16W	1	
R9856	TAJAAH0101JV	M 100 OHM,J,1/16W	1	D0GB101JA006
R9857	ERJ3GEYJ102	M 1KOHM,J,1/16W	1	
R9858	TAJAAH0101JV	M 100 OHM,J,1/16W	1	D0GB101JA006
R9859	ERJ3GEYJ102	M 1KOHM,J,1/16W	1	
R9860	TAJAAH0101JV	M 100 OHM,J,1/16W	1	D0GB101JA006
R9861	ERJ3GEYJ103	M 10KOHM,J,1/16W	1	
R9864	TAJAAH0101JV	M 100 OHM,J,1/16W	1	D0GB101JA006
R9867	ERJ3GEYJ103	M 10KOHM,J,1/16W	1	
R9868	ERJ3GEYJ472	M 4.7KOHM,J,1/16W	1	
R9869	TAJAAH0101JV	M 100 OHM,J,1/16W	1	D0GB101JA006
R9871	ERJ3GEYJ102	M 1KOHM,J,1/16W	1	
R9872	ERJ3GEY0R00	M 0 OHM, 1/16W	1	
R9873	ERJ3GEYJ472	M 4.7KOHM,J,1/16W	1	
R9874,75	TAJAAH0101JV	M 100 OHM,J,1/16W	2	D0GB101JA006
R9876	ERJ3GEYJ103	M 10KOHM,J,1/16W	1	
R9878-80	TAJAAH0101JV	M 100 OHM,J,1/16W	3	D0GB101JA006
R9882,83	TAJAAH0101JV	M 100 OHM,J,1/16W	2	D0GB101JA006
R9885	EXB38V103J	RESISTOR ARRAY	1	
R9886	TAJAAH0101JV	M 100 OHM,J,1/16W	1	D0GB101JA006
R9887	ERJ3GEYJ103	M 10KOHM,J,1/16W	1	
R9889	TAJAAH0101JV	M 100 OHM,J,1/16W	1	D0GB101JA006
R9890	ERJ3GEYJ103	M 10KOHM,J,1/16W	1	
R9893-96	TAJAAH0101JV	M 100 OHM,J,1/16W	4	D0GB101JA006
R9897	ERJ3GEYJ103	M 10KOHM,J,1/16W	1	
R9898	ERJ3GEY0R00	M 0 OHM, 1/16W	1	
R9900	TAJAAH0101JV	M 100 OHM,J,1/16W	1	D0GB101JA006
R9901	ERJ3GEY0R00	M 0 OHM, 1/16W	1	
R9903-05	ERJ3GEYJ103	M 10KOHM,J,1/16W	3	
R9906	TAJAAH0101JV	M 100 OHM,J,1/16W	1	D0GB101JA006
R9907	ERJ3GEYJ103	M 10KOHM,J,1/16W	1	

Ref. No.	Part No.	Part Name & Description	Pcs	Remarks
R9908	TAJAAH0101JV	M 100 OHM,J,1/16W	1	D0GB101JA006
R9909	ERJ3GEYJ103	M 10KOHM,J,1/16W	1	
R9910	TAJAAH0101JV	M 100 OHM,J,1/16W	1	D0GB101JA006
R9913	ERJ6ENF2202	M 2.2KOHM, 1/10W	1	
R9914	ERJ3GEYJ102	M 1KOHM,J,1/16W	1	
R9916	ERJ3GEY0R00	M 0 OHM, 1/16W	1	
R9917	ERJ3GEYJ103	M 10KOHM,J,1/16W	1	
R9918	ERJ3GEY0R00	M 0 OHM, 1/16W	1	
R9919	ERJ6ENF1002	M 10KOHM, 1/10W	1	
R9920	ERJ3GEYJ105	M 1MOHM,J,1/16W	1	
R9921-23	TAJAAH0101JV	M 100 OHM,J,1/16W	3	D0GB101JA006
R9924	ERJ3GEYJ223	M 22KOHM,J,1/16W	1	
R9925	ERJ3GEY0R00	M 0 OHM, 1/16W	1	
R9929,30	TAJAAH0101JV	M 100 OHM,J,1/16W	2	D0GB101JA006
R9931	ERJ3GEYJ103	M 10KOHM,J,1/16W	1	
R9932	ERJ3GEYJ102	M 1KOHM,J,1/16W	1	
R9933	ERJ3GEYJ331	M 330 OHM,J,1/16W	1	
R9934	ERJ3GEYJ103	M 10KOHM,J,1/16W	1	
R9935,36	ERJ3GEYJ562	M 5.6KOHM,J,1/16W	2	
R9937	ERJ3GEYJ331	M 330 OHM,J,1/16W	1	
R9939	ERJ3GEYJ331	M 330 OHM,J,1/16W	1	
R9940	ERJ3GEYJ103	M 10KOHM,J,1/16W	1	
R9941	ERJ3GEYJ331	M 330 OHM,J,1/16W	1	
R9942	ERJ3GEYJ103	M 10KOHM,J,1/16W	1	
R9943	TAJAAH0101JV	M 100 OHM,J,1/16W	1	D0GB101JA006
R9944	ERJ3GEYJ102	M 1KOHM,J,1/16W	1	
R9945,46	ERJ3GEYJ100	M 10 OHM,J,1/16W	2	
R9947	ERJ3GEYJ472	M 4.7KOHM,J,1/16W	1	
R9949	ERJ3GEYJ103	M 10KOHM,J,1/16W	1	
R9951,52	ERJ3GEYJ471	M 470 OHM,J,1/16W	2	
R9954	ERJ3GEYJ471	M 470 OHM,J,1/16W	1	
R9956	ERJ3GEYJ472	M 4.7KOHM,J,1/16W	1	
R9957	ERJ3GEYJ103	M 10KOHM,J,1/16W	1	
R9959,60	ERJ3GEYJ472	M 4.7KOHM,J,1/16W	2	
R9961	ERJ6ENF1621	M1.62KOHM, 1/10W	1	
R9962	ERJ6ENF1001	M 1KOHM, 1/10W	1	
R9964	ERJ6GEY0R00	M 0 OHM, 1/10W	1	
R9965	ERJ3GEYJ102	M 1KOHM,J,1/16W	1	
R9966	ERJ3GEY0R00	M 0 OHM, 1/16W	1	
R9969	ERJ6GEY0R00	M 0 OHM, 1/10W	1	
R9971	ERJ6GEY0R00	M 0 OHM, 1/10W	1	
R9972	ERJ3GEYJ103	M 10KOHM,J,1/16W	1	
R9973	ERJ3GEY0R00	M 0 OHM, 1/16W	1	
R9984-88	ERJ3GEY0R00	M 0 OHM, 1/16W	5	
R9991	ERJ3GEYJ103	M 10KOHM,J,1/16W	1	
R9993,94	ERJ3GEYJ103	M 10KOHM,J,1/16W	2	
R9996	ERJ6GEY0R00	M 0 OHM, 1/10W	1	
R9998	ERJ3GEYJ103	M 10KOHM,J,1/16W	1	
RL401	K6B2ADA00007	REALY	1	⚠
RL402,03	K6B1ADA00009	REALY	2	⚠
RL901	K6B1ADA00023	RELAY	1	⚠
RM300	PNA4601M05TV	REMOCO RECEIVER	1	
RTL	TNPA2626AB	CIRCUIT BOARD SU	1	TH-37PA30A/H/M/R ⚠
RTL	TNPA2627AB	CIRCUIT BOARD SD	1	TH-37PA30A/H/M/R ⚠
RTL	TNPA2872	CIRCUIT BOARD SS2	1	TH-42PA30H/M/R ⚠
RTL	TNPA2873	CIRCUIT BOARD SS3	1	TH-42PA30H/M/R ⚠

Ref. No.	Part No.	Part Name & Description	Pcs	Remarks
RTL	TNPA2876	CIRCUIT BOARD SS4	1	TH-37PA30A/H/M/R ⚠
RTL	TNPA2877	CIRCUIT BOARD SS5	1	TH-37PA30A/H/M/R ⚠
RTL	TNPA2957AB	CIRCUIT BOARD SU	1	TH-42PA30H/M/R ⚠
RTL	TNPA2958AB	CIRCUIT BOARD SD	1	TH-42PA30H/M/R ⚠
RTL	TNPA2988AC	CIRCUIT BOARD K	1	⚠
RTL	TNPA2990AC	CIRCUIT BOARD S	1	⚠
RTL	TNPA3083	CIRCUIT BOARD C1	1	TH-42PA30H/M/R ⚠
RTL	TNPA3084	CIRCUIT BOARD C2	1	TH-42PA30H/M/R ⚠
RTL	TNPA3089	CIRCUIT BOARD C1	1	TH-37PA30A/H/M/R ⚠
RTL	TNPA3090	CIRCUIT BOARD C2	1	TH-37PA30A/H/M/R ⚠
RTL	TNPA3106	CIRCUIT BOARD SC	1	TH-42PA30H/M/R ⚠
RTL	TNPA3106AB	CIRCUIT BOARD SC	1	TH-37PA30A/H/M/R ⚠
RTL	TNPA3107	CIRCUIT BOARD SS	1	TH-42PA30H/M/R ⚠
RTL	TNPA3107AB	CIRCUIT BOARD SS	1	TH-37PA30A/H/M/R ⚠
RTL	TNPA3151AD	CIRCUIT BOARD JG	1	⚠
RTL	TNPA3336	CIRCUIT BOARD P	1	⚠
RTL	TNPA3432	CIRCUIT BOARD H	1	TH-37/42PA30H/M/R ⚠
RTL	TNPA3432AB	CIRCUIT BOARD H	1	TH-37PA30A ⚠
RTL	TNPA3433	CIRCUIT BOARD TA	1	TH-37/42PA30H/M/R ⚠
RTL	TNPA3434	CIRCUIT BOARD TB	1	TH-37/42PA30H/M/R ⚠
RTL	TXN/G1UFSA	CIRCUIT BOARD G	1	⚠
RTL	TXN/T1UFSA	CIRCUIT BOARD T	1	TH-37PA30A ⚠
RTL	TXNDG1UGSA	CIRCUIT BOARD DG	1	TH-37PA30A ⚠
RTL	TXNDG1UHSR	CIRCUIT BOARD DG	1	TH-37/42PA30H/M/R ⚠
RTL	TXNPA1UKSE	CIRCUIT BOARD PA	1	⚠
RTL	TXNPF1UKSE	CIRCUIT BOARD PF	1	⚠
RTL	TZTNP01UHSB	CIRCUIT BOARD D	1	⚠
S4	K1KA07B00006	7P CONNECTOR	1	
S34	K1KA03A00213	3P CONNECTOR	1	
S300	K0F162B00002	SWITCH	1	
S901	J0LT00000009	SWITCH	1	⚠
S915	J0LT00000009	SWITCH	1	⚠
SC2	K1KA06A00180	6P CONNECTOR	1	
SC20	K1KA20A00180	20P CONNECTOR	1	
SC23	K1KA03A00213	3P CONNECTOR	1	
SC41-44	K1KB40B00015	40P CONNECTOR	4	
SC45,46	K1KA10A00194	10P CONNECTOR	2	
SD1-D3	K1MN80B00004	80P CONNECTOR	3	
SD46	K1KA10B00209	10P CONNECTOR	1	
SS11	K1KA07A00096	7P CONNECTOR	1	
SS12	K1KA05A00139	5P CONNECTOR	1	
SS23	K1KA11A00073	11P CONNECTOR	1	
SS34	K1KA03A00213	3P CONNECTOR	1	

Ref. No.	Part No.	Part Name & Description	Pcs	Remarks
SS40	K1KB07A00037	7P CONNECTOR	1	TH-42PA30H/M/R
SS40A	K1KB07A00037	7P CONNECTOR	1	TH-37PA30A/H/M/R
SS41-46	K1MN13B00020	13P CONNECTOR	6	TH-42PA30H/M/R
SS41A-6A	K1MN13B00020	13P CONNECTOR	6	TH-37PA30A/H/M/R
SS47	K1KB07A00037	7P CONNECTOR	1	TH-42PA30H/M/R
SS47A	K1KB07A00037	7P CONNECTOR	1	TH-37PA30A/H/M/R
SS48,49	K1KA07A00170	7P CONNECTOR	2	
SU1-U3	K1MN80B00004	80P CONNECTOR	3	
SU45	K1KA10B00209	10P CONNECTOR	1	
SW3701-05	EVQ23405R	SWITCH	5	
T10	TJS6A9390	24P CONNECTOR	1	
T11	TJS6A9390	24P CONNECTOR	1	TH-37/42PA30H/M/R
T401	ETS25AD1H6AG	SWITCHING TRANS	1	⚠
T501	ETS49BP116AD	SWITCHING TRANS	1	⚠
T502	ETS42BV116AD	SWITCHING TRANS	1	⚠
T920	ETS29AK7E6AD	SWITCHING TRANS	1	⚠
T6451	G4D1A0000072	SWITCHING TRANS	1	
T6461	ETS13TB139AP	SWITCHING TRANS	1	
T6471	G4D1A0000072	SWITCHING TRANS	1	
TPP1	ERD25V0R00	C 0 OHM, 1/4W	1	
TU001	ENGF9301GF	TUNER	1	TH-37/42PA30H/M/R ⚠
TU002	ENG39A01GF	TUNER	1	TH-37/42PA30H/M/R ⚠
TU003	ENG29526G	TUNER	1	TH-37PA30A ⚠
VR6443	EVMEASA00B24	CONTROL 20KOHMB 0.3W	1	
VR6477	EVMEASA00B53	CONTROL 5KOHMB 0.3W	1	
VR6557	EVMEASA00B14	CONTROL 10KOHMB 0.3W	1	
VR6774	EVMEASA00B53	CONTROL 5KOHMB 0.3W	1	
X1000	H0J921400003	CRYSTAL	1	
X1001	H0J600400006	CRYSTAL	1	
X1301	H0J202500002	CRYSTAL	1	
X2001	TSSA128	CRYSTAL	1	H0D184500008
X2002	EFCS6504BF	CERAMIC FILTER	1	TH-37PA30A
X2003	EFCS7004BF	CERAMIC FILTER	1	TH-37PA30A
X2651	H0D245500009	CRYSTAL	1	
X6001	H1A4905B0001	CRYSTAL	1	
X9302	H0J200500016	CRYSTAL	1	
X9701	H0J245500013	CRYSTAL	1	
X9702	H0J921400003	CRYSTAL	1	
X9703	H0J200500016	CRYSTAL	1	
ZA001	K4ZZ01000121	EARTH LUG	1	TH-37/42PA30H/M/R
ZA1,02	K4ZZ01000121	EARTH LUG	2	
ZA051,52	K4ZZ01000121	EARTH LUG	2	TH-37/42PA30H/M/R
ZA080,81	K4ZZ01000121	EARTH LUG	2	TH-37PA30A
ZA901	K4ZZ01000121	EARTH LUG	1	
ZA3101-04	K4ZZ01000121	EARTH LUG	4	
ZA3106,07	K4ZZ01000121	EARTH LUG	2	

Ref. No.	Part No.	Part Name & Description	Pcs	Remarks