ORDER NO. MTNC140315CE

Service Manual

58 inch Class 4K Ultra HD TV

Model No. TC-58AX800U

LA52 Chassis

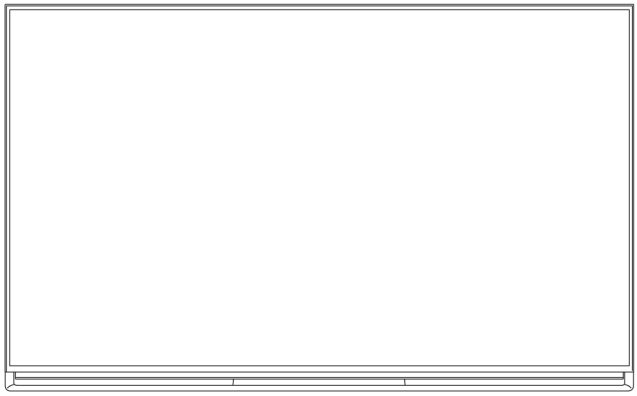

⚠ WARNING

This service information is designed for experienced repair technicians only and is not designed for use by the general public.
It does not contain warnings or cautions to advise non-technical individuals of potential dangers in attempting to service a product.
Products powered by electricity should be serviced or repaired only by experienced professional technicians. Any attempt to service or repair the product or products dealt with in this service information by anyone else could result in serious injury or death.

IMPORTANT SAFETY NOTICE

There are special components used in this equipment which are important for safety. These parts are marked by ⚠ in the Schematic Diagrams, Circuit Board Diagrams, Exploded Views and Replacement Parts List. It is essential that these critical parts should be replaced with manufacturer's specified parts to prevent shock, fire or other hazards. Do not modify the original design without permission of manufacturer.

Panasonic®

© Panasonic Corporation 2014.
Unauthorized copying and distribution is a violation of law.

A04A860

TABLE OF CONTENTS

PAGE

1 Safety Precautions ----------3
1.1. General Guidelines ----------3
1.2. Touch-Current Check----------3
2 Warning ----------4
2.1. Prevention of Electrostatic Discharge (ESD) to Electrostatically Sensitive (ES) Devices ----------4
2.2. About lead free solder (PbF) ----------5
3 Service Navigation----------6
3.1. PCB Layout----------6
4 Specifications ----------7
5 Technical Descriptions----------8
5.1. Specification of KEY for DTCP-IP, WMDRM and Widevine----------8
6 Service Mode ----------9
6.1. How to enter into Service Mode ----------9
6.2. SRV-TOOL ---------- 10
6.3. Hotel mode---------- 11
6.4. Data Copy by USB Memory ---------- 12
7 Troubleshooting Guide---------- 15
7.1. Check of the IIC bus lines---------- 15
7.2. Power LED Blinking timing chart ---------- 16
7.3. LCD Panel test mode / FR test mode---------- 16
8 Disassembly and Assembly Instructions---------- 17
8.1. Disassembly Flow Chart for the Unit ---------- 17
8.2. Disassembly Procedure for the Unit---------- 17
9 Measurements and Adjustments ---------- 36
9.1. Voltage chart of A-Board ---------- 36
9.2. Voltage chart of P-Board ---------- 36
9.3. Voltage chart of HE-Board ---------- 36
9.4. Voltage chart of FR-Board ---------- 36
10 Block Diagram ---------- 37
10.1. Main Block Diagram ---------- 37
10.2. Block (1/3) Diagram ---------- 38
10.3. Block (2/3) Diagram ---------- 39
10.4. Block (3/3) Diagram ---------- 40
11 Wiring Connection Diagram---------- 41
11.1. Caution statement.---------- 41
11.2. Wiring (1)---------- 41
11.3. Wiring (2)---------- 42
11.4. Wiring (3)---------- 43
11.5. Wiring (4)---------- 44
11.6. Wiring (5)---------- 44
12 Schematic Diagram---------- 45
13 Printed Circuit Board ---------- 45
14 Exploded View and Replacement Parts List ---------- 45
14.1. Exploded View ---------- 45
14.2. Electrical Replacement Parts List---------- 45

1 Safety Precautions

1.1. General Guidelines

1. When servicing, observe the original lead dress. If a short circuit is found, replace all parts which have been overheated or damaged by the short circuit.
2. After servicing, see to it that all the protective devices such as insulation barriers, insulation papers shields are properly installed.
3. After servicing, make the following leakage current checks to prevent the customer from being exposed to shock hazards.
4. When conducting repairs and servicing, do not attempt to modify the equipment, its parts or its materials.
5. When wiring units (with cables, flexible cables or lead wires) are supplied as repair parts and only one wire or some of the wires have been broken or disconnected, do not attempt to repair or re-wire the units. Replace the entire wiring unit instead.
6. When conducting repairs and servicing, do not twist the Fasten connectors but plug them straight in or unplug them straight out.

1.2. Touch-Current Check

1. Plug the AC cord directly into the AC outlet. Do not use an isolation transformer for this check.
2. Connect a measuring network for touch currents between each exposed metallic part on the set and a good earth ground such as a water pipe, as shown in Figure 1.
3. Use Leakage Current Tester (Simpson 228 or equivalent) to measure the potential across the measuring network.
4. Check each exposed metallic part, and measure the voltage at each point.
5. Reserve the AC plug in the AC outlet and repeat each of the above measure.
6. The potential at any point (TOUCH CURRENT) shall not exceed 0.5 MIU.
7. In case a measurement is out of the limits specified, there is a possibility of a shock hazard, and the equipment should be repaired and rechecked before it is returned to the customer.

Measuring network for TOUCH CURRENTS

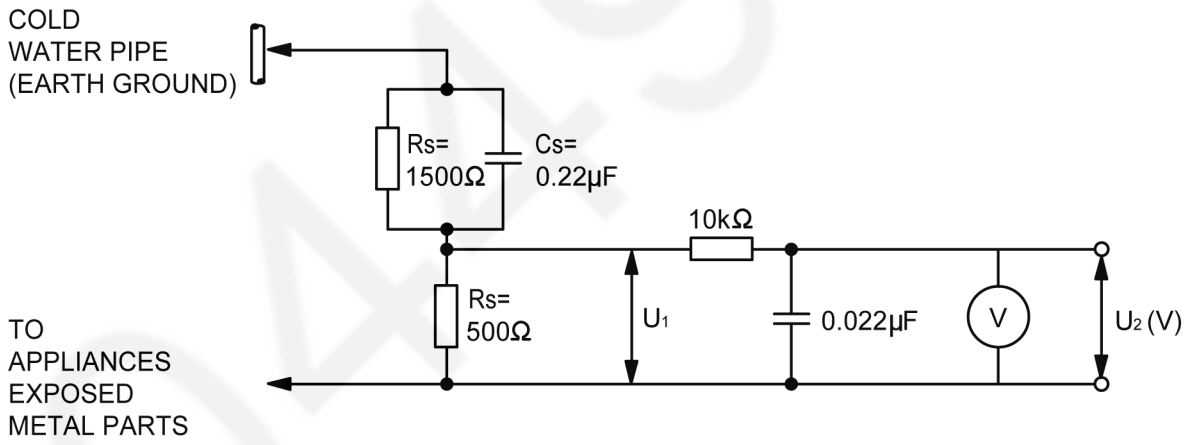

Resistance values in ohms (Ω)

V: Voltmeter or oscilloscope
(r.m.s. or peak reading)

Input resistance: ≥ 1MΩ
Input capacitance: ≤ 200pF
Frequency range: 15 Hz to 1 MHz and d.c. respectively

MIU = U_2 x 2 (r.m.s. value)

NOTE - Appropriate measures should be taken to obtain the correct value in case of non-sinusoidal waveforms.

Figure 1

2 Warning

2.1. Prevention of Electrostatic Discharge (ESD) to Electrostatically Sensitive (ES) Devices

Some semiconductor (solid state) devices can be damaged easily by static electricity. Such components commonly are called Electrostatically Sensitive (ES) Devices. Examples of typical ES devices are integrated circuits and some field-effect transistors and semiconductor [chip] components. The following techniques should be used to help reduce the incidence of component damage caused by electrostatic discharge (ESD).

1. Immediately before handling any semiconductor component or semiconductor-equipped assembly, drain off any ESD on your body by touching a known earth ground. Alternatively, obtain and wear a commercially available discharging ESD wrist strap, which should be removed for potential shock reasons prior to applying power to the unit under test.
2. After removing an electrical assembly equipped with ES devices, place the assembly on a conductive surface such as aluminum foil, to prevent electrostatic charge buildup or exposure of the assembly.
3. Use only a grounded-tip soldering iron to solder or unsolder ES devices.
4. Use only an anti-static solder removal device. Some solder removal devices not classified as [anti-static (ESD protected)] can generate electrical charge sufficient to damage ES devices.
5. Do not use freon-propelled chemicals. These can generate electrical charges sufficient to damage ES devices.
6. Do not remove a replacement ES device from its protective package until immediately before you are ready to install it. (Most replacement ES devices are packaged with leads electrically shorted together by conductive foam, aluminum foil or comparable conductive material).
7. Immediately before removing the protective material from the leads of a replacement ES device, touch the protective material to the chassis or circuit assembly into which the device will be installed.
   Caution
   Be sure no power is applied to the chassis or circuit, and observe all other safety precautions.
8. Minimize bodily motions when handling unpackaged replacement ES devices. (Otherwise ham less motion such as the brushing together of your clothes fabric or the lifting of your foot from a carpeted floor can generate static electricity (ESD) sufficient to damage an ES device).

AO4496

2.2. About lead free solder (PbF)

Note: Lead is listed as (Pb) in the periodic table of elements.
In the information below, Pb will refer to Lead solder, and PbF will refer to Lead Free Solder.
The Lead Free Solder used in our manufacturing process and discussed below is (Sn+Ag+Cu).
That is Tin (Sn), Silver (Ag) and Copper (Cu) although other types are available.

This model uses Pb Free solder in it's manufacture due to environmental conservation issues. For service and repair work, we'd suggest the use of Pb free solder as well, although Pb solder may be used.

PCBs manufactured using lead free solder will have the PbF within a leaf Symbol **PbF** stamped on the back of PCB.

Caution

- Pb free solder has a higher melting point than standard solder. Typically the melting point is 50 ~ 70 °F (30~40 °C) higher. Please use a high temperature soldering iron and set it to 700 ± 20 °F (370 ± 10 °C).
- Pb free solder will tend to splash when heated too high (about 1100 °F or 600 °C).
  If you must use Pb solder, please completely remove all of the Pb free solder on the pins or solder area before applying Pb solder. If this is not practical, be sure to heat the Pb free solder until it melts, before applying Pb solder.
- After applying PbF solder to double layered boards, please check the component side for excess solder which may flow onto the opposite side. (see figure below)

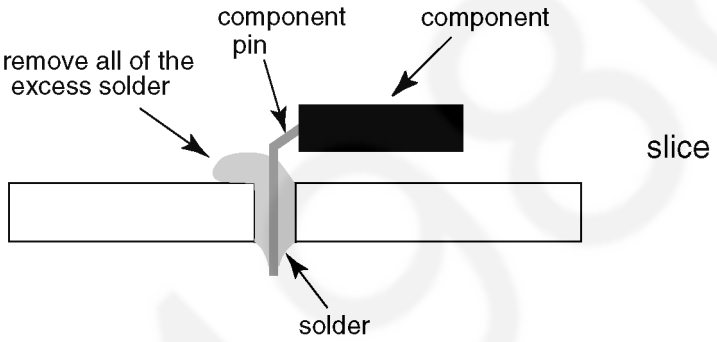

Suggested Pb free solder

There are several kinds of Pb free solder available for purchase. This product uses Sn+Ag+Cu (tin, silver, copper) solder. However, Sn+Cu (tin, copper), Sn+Zn+Bi (tin, zinc, bismuth) solder can also be used.

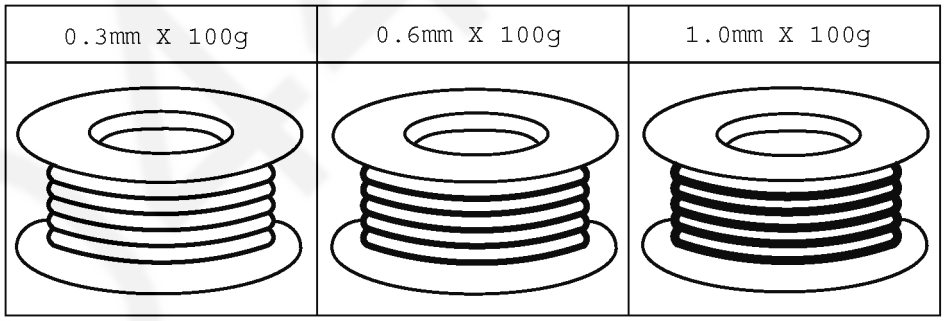

3 Service Navigation

3.1. PCB Layout

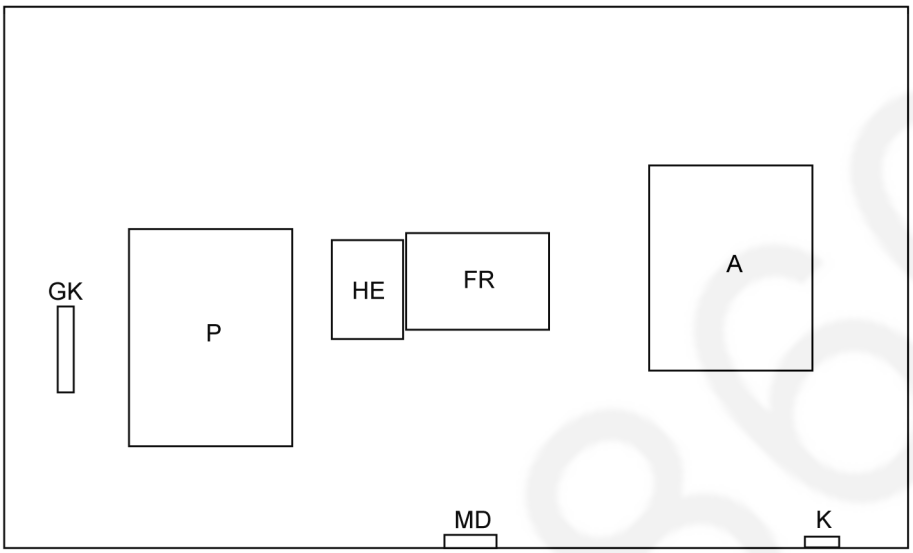

Board Name	Main Device
A-Board	TUN, OFDM, ADV, LD4, STBY EEP
P-Board	Power Supply
GK-Board	Function SW for LGD panel
K-Board	LED, RM, CATS
FR-Board	GCX
HE-Board	HEVC **(Non serviceable, HE-Board should be exchanged for service)**
MD-Board	Human Activity Sensor

A04080

4 Specifications

Display Panel

Panel System

LCD panel with LED backlight

Screen size

58 ” class (57.5 inches measured diagonally)

W × H × Diagonal

- 50.0 ” × 28.4 ” × 57.5 ”
  (1,270 mm × 721 mm × 1,461 mm)

Number of pixels

3,840 × 2,160

Speaker Output

18W [4W + 4W + 10W]

Channel Capability (Digital/Analog)

VHF/ UHF: 2 - 69, CATV: 1 - 135

Operating Conditions

Temperature: 32 °F - 95 °F (0 °C - 35 °C)

Humidity: 20 % - 80 % RH (non-condensing)

Connection Terminals

VIDEO IN

RCA PIN (VIDEO, AUDIO-L, AUDIO-R)

COMPONENT IN

RCA PIN (Y, PB/CB, PR/CR, AUDIO-L, AUDIO-R)

HDMI IN 1/2/3/4

Type A Connector
(supports “HDAVI Control 5” function)

USB 1/2/3

Type A connector
USB1/2: DC 5 V, Max. 500 mA
[Hi-Speed USB (USB 2.0)]
USB3: DC 5 V, Max. 900 mA
[SuperSpeed USB (USB 3.0)]

DisplayPort

VESA DisplayPort (applicable to 4K format)

DIGITAL AUDIO OUT

PCM / Dolby Digital / DTS, Fiber Optic

OTHERS

SD Card slot,
ETHERNET (10BASE-T/100BASE-TX/1000BASE-T)

Dimensions

Including pedestal (W × H* × D)

- 51.5 ” × 31.7 ” × 11.6 ”
  (1,306 mm × 803 mm × 294 mm)

TV Set only (W × H* × D)

- 51.5 ” × 30.7 ” × 1.7 ”
  (1,306 mm × 779 mm × 42 mm)

* With Camera pop-up: + 1.0 ” (24 mm) height

Mass

Including pedestal

- 105.9 lb. (48.0 kg) NET

TV Set only

- 72.8 lb. (33.0 kg) NET

Built-in Camera

Focus

Fixed focus

Resolution

1,920 × 1,080

Wireless LAN

Standard Compliance and Frequency Range *1, *2

IEEE 802.11a/n: 5.15 GHz - 5.35 GHz,
5.47 GHz - 5.85 GHz

IEEE 802.11b/g/n: 2.400 GHz - 2.4835 GHz

Security

WPA2-PSK (TKIP/AES)

WPA-PSK (TKIP/AES)

WEP (64bit/128bit)

*1 The frequency and channel differ depending on the country.

*2 802.11b/g/n CH1 ~ CH11 only use for United States and Canada.

Bluetooth

Standard Compliance

Bluetooth® 3.0

Frequency Range

2.402 GHz - 2.480 GHz

3D Eyewear

Battery

Coin-shaped lithium battery CR2025

Operation time:

Aproxx. 75 hours in continuous use of the battery made by Panasonic

Note

Design and Specifications are subject to change without notice. Mass and Dimensions shown are approximate.

For information about the power source and power consumption, refer to the nameplate on the rear enclosure.

3D Eyewear and Touch Pad Controller use Bluetooth wireless technology.

5 Technical Descriptions

5.1. Specification of KEY for DTCP-IP, WMDRM and Widevine

5.1.1. General information:

1. eMMC (IC8903) for spare parts has the seed of KEY for each.
2. The final KEY data will be generated by Main IC (IC8000) when SELF CHECK was done and are stored in both Main IC (IC8000) and eMMC (IC8903).

5.1.2. Replacement of ICs:

When Main IC is replaced, eMMC (IC8903) should be also replaced with new one the same time.
When eMMC (IC8903) is replaced, Main IC is not necessary to be replaced the same time.
After the replacement of IC, SELF CHECK should be done to generate the final KEY data.
How to SELF CHECK: While pressing [VOLUME (-)] button on the main unit, press [MENU] button on the remote control for more than 3 seconds.
TV will be forced to the factory shipment setting after this SELF CHECK.

A0449860

6 Service Mode

6.1. How to enter into Service Mode

6.1.1. Purpose/

After exchange parts, check and adjust the contents of adjustment mode.

While pressing [VOLUME (-)] button of the main unit, press [INFO] button of the remote control three times within 2 seconds.

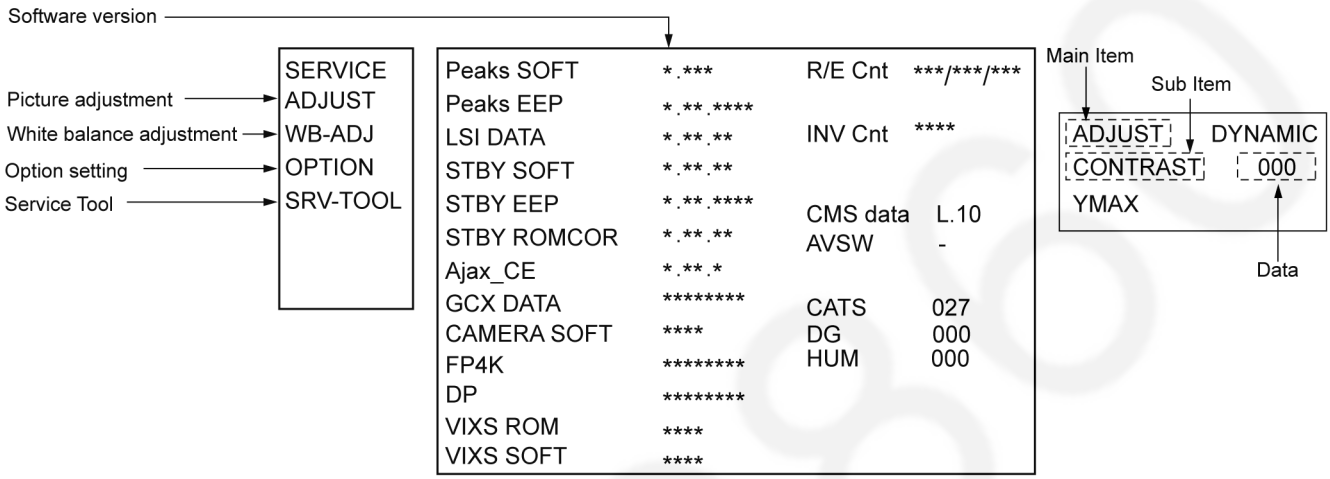

6.1.2. Key command

[1] button...Main items Selection in forward direction
[2] button...Main items Selection in reverse direction
[3] button...Sub items Selection in forward direction
[4] button...Sub items Selection in reverse direction
[VOL] button...Value of sub items change in forward direction (+), in reverse direction (-)

6.1.3. How to exit

Switch off the power with the [POWER] button on the main unit or the [POWER] button on the remote control.

6.1.4. Contents of adjustment mode

- Value is shown as a hexadecimal number.
- Preset value differs depending on models.
- After entering the adjustment mode, take note of the value in each item before starting adjustment.

Main item	Sub item	Sample Data	Remark
ADJUST	CONTRAST	000	
	COLOR	34	
	TINT	00	
	SUB-BRT	800	
	BACKLGT	FFF	
	B-Y-G	40	
	R-Y-A	00	
	V COM	000	
WB-ADJ	R-GAIN	D6	
	G-GAIN	C7	
	B-GAIN	FF	
	R-CENT	89	
	G-CENT	80	
	B-CENT	AB	
OPTION	Boot	ROM	Factory Preset.
	STBY-SET	00	
	EMERGENCY	ON	
	CLK MODE	01	
	CLOCK	FFF	
	EDID-CLK	HIGH	
SRV-TOOL		00	See next.

6.2. SRV-TOOL

6.2.1. How to access

1. Select [SRV-TOOL] in Service Mode.
2. Press [OK] button on the remote control.

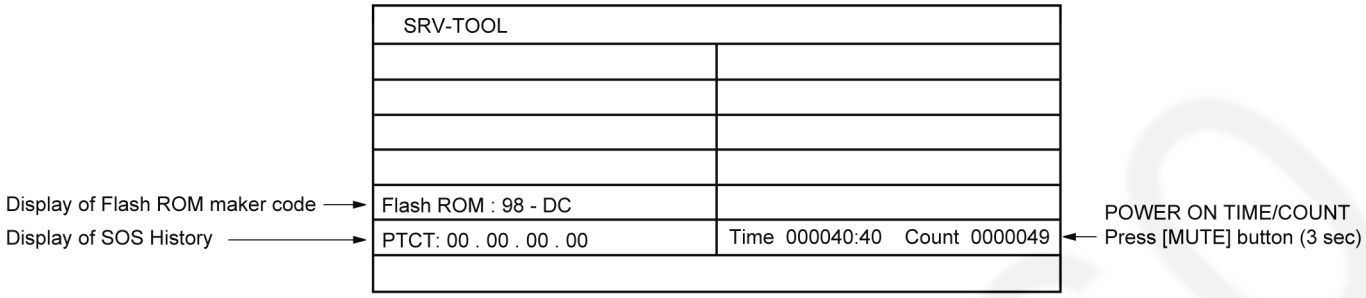

6.2.2. Display of SOS History

SOS History (Number of LED blinking) indication.
From left side; Last SOS, before Last, three occurrence before, 2nd occurrence after shipment, 1st occurrence after shipment.
This indication except 2nd and 1st occurrence after shipment will be cleared by [Self-check indication and forced to factory shipment setting].

6.2.3. POWER ON TIME/COUNT

Note : To display TIME/COUNT menu, highlight position, then press MUTE for 3 sec.
Time : Cumulative power on time, indicated hour : minute by decimal
Count : Number of ON times by decimal
Note : This indication will not be cleared by either of the self-checks or any other command.

6.2.4. Exit

Disconnect the AC cord from wall outlet or press the [POWER] button on the main unit for 3 seconds to turn off and then turn on automatically.

A0449860

6.3. Hotel mode

1. Purpose
   Restrict a function for hotels.
2. Access command to the Hotel mode setup menu
   In order to display the Hotel mode setup menu:
   While pressing [VOLUME (-)] button of the main unit, press [INPUT] button of the remote control three times within 2 seconds.

   Then, the Hotel mode setup menu is displayed.

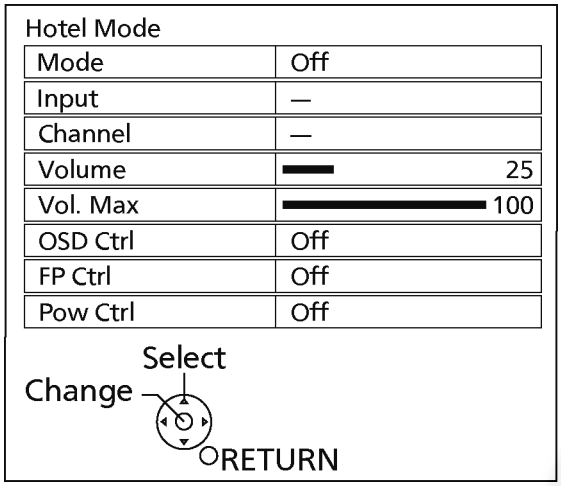

3. To exit the Hotel mode setup menu
   Switch off the power with the [POWER] button on the main unit or the [POWER] button on the remote control.
4. Explain the Hotel mode setup menu

Item	Function
Mode	Select hotel mode On/Off
Input	Select input signal modes. Set the input, when each time power is switched on. Selection: -,RF,HDMI1,HDMI2,AV • Off: give priority to a last memory.
Channel	Select channel when input signal is RF. Set the channel, each time power is switched on. Selection: Any channel number or [-]. [-] means the channel when turns off.
Volume	Adjust the volume when each time power is switched on. Range: 0 to 100
Vol. Max	Adjust maximum volume. Range: 0 to 100
OSD Ctrl	Restrict the OSD. Selection: Off/Pattern1 • Off: No restriction • Pattern1: restriction
FP Ctrl	Select front key conditions. Selection: Off/Pattern1/All • Off: altogether valid. • Pattern1: only input key is valid. • All: altogether invalid.
Pow Ctrl	Select POWER-On/Off condition when AC power cord is disconnected and then connected. Off: The same condition when AC power cord is disconnected. On: Forced power ON condition.

A04490

6.4. Data Copy by USB Memory

Note:
SD card can not be used for Data Copy.

6.4.1. Purpose

(a) Board replacement (Copy the data when exchanging A-board):
When exchanging A-board, the data in original A-board can be copied to USB Memory and then copy to new A-board.

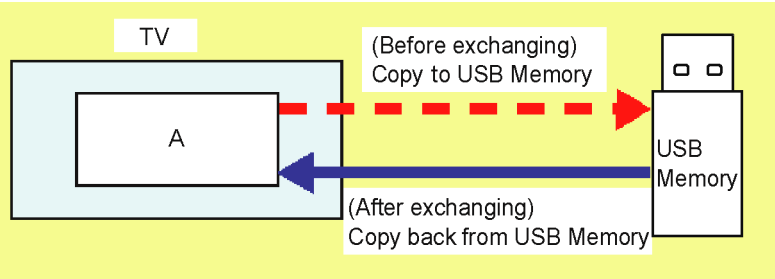

Following data can be copied.
User setting data
(incl. Hotel mode setting data)
Channel scan data
Adjustment and factory preset data

(b) Hotel (Copy the data when installing a number of units in hotel or any facility):
When installing a number of units in hotel or any facility, the data in master TV can be copied to USB Memory and then copy to other TVs.

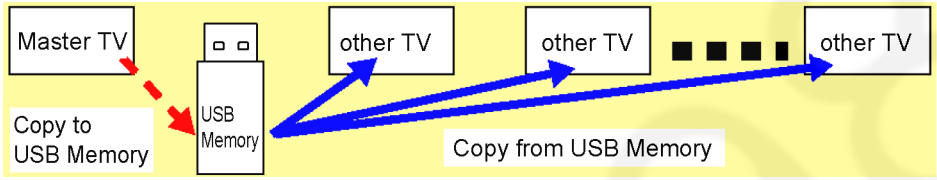

Following data can be copied.
User setting data
(incl. Hotel mode setting data)
Channel scan data

6.4.2. Preparation

Make pwd file as startup file for (a) or (b) in a empty USB Memory.

1. Insert a empty USB Memory to your PC.
2. Right-click a blank area in a USB Memory window, point to New, and then click text document. A new file is created by default (New Text Document.txt).
3. Right-click the new text document that you just created and select rename, and then change the name and extension of the file to the following file name for (a) or (b) and press ENTER.

File name:
(a) For Board replacement : boardreplace.pwd
(b) For Hotel : hotel.pwd

Note:
Please make only one file to prevent the operation error.
No any other file should not be in USB Memory.

6.4.3. Data copy from TV set to USB Memory

1. Turn on the TV set.
2. Insert USB Memory with a startup file (pwd file) to USB terminal.
   On-screen Display will be appeared according to the startup file automatically.
3. Input a following password for (a) or (b) by using remote control.
   (a) For Board replacement : 2770
   (b) For Hotel : 4850
   Data will be copied from TV set to USB Memory.
   It takes around 2 to 6 minutes maximum for copying.
4. After the completion of copying to USB Memory, remove USB Memory from TV set.
5. Turn off the TV set.

Note:
Following new folder will be created in USB Memory for data from TV set.
(a) For Board replacement : user_setup
(b) For Hotel : hotel

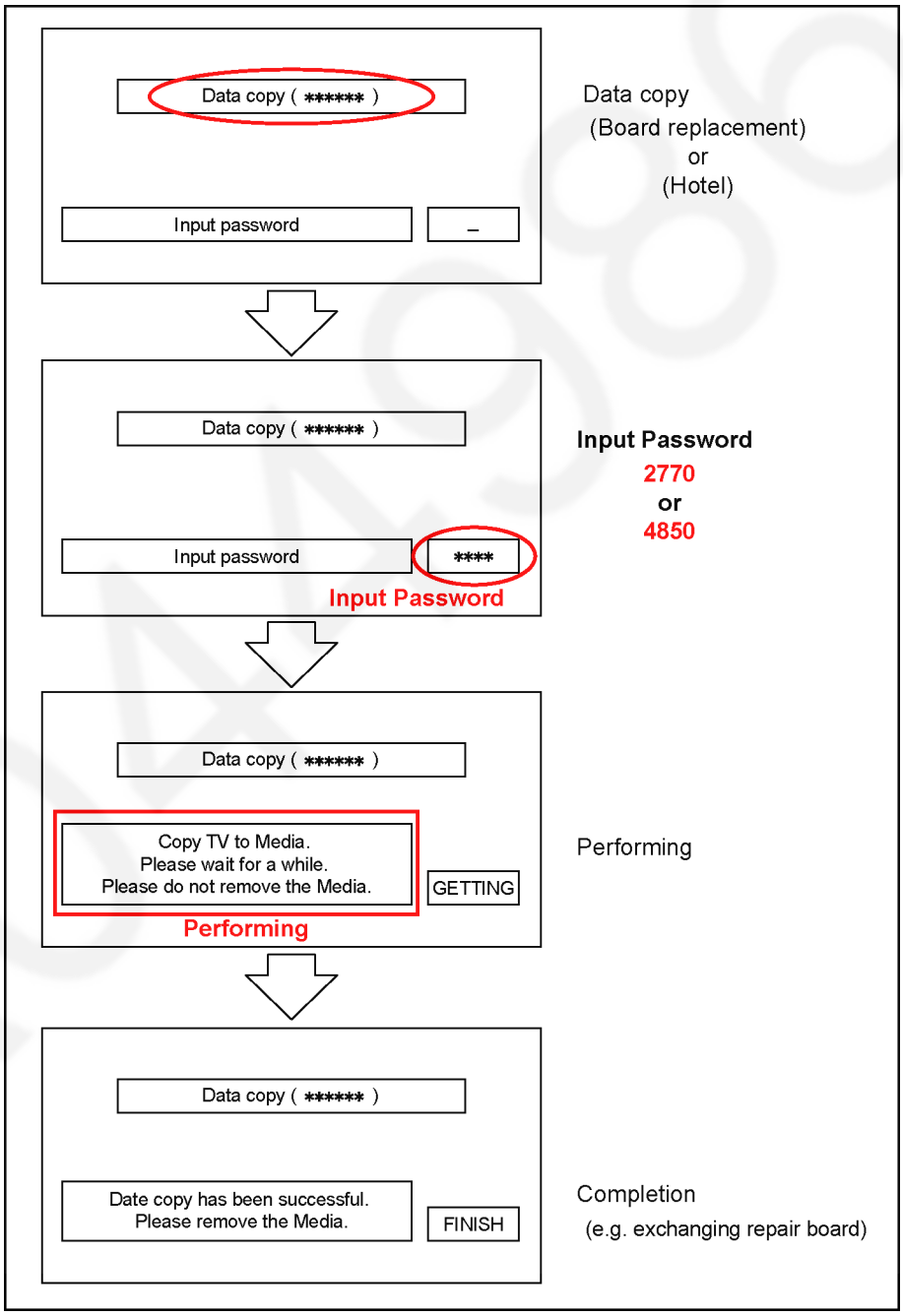

6.4.4. Data copy from USB Memory to TV set

1. Turn on the TV set.
2. Insert USB Memory with Data to USB terminal.
   On-screen Display will be appeared according to the Data folder automatically.
3. Input a following password for (a) or (b) by using remote control.
   (a) For Board replacement : 2771
   (b) For Hotel : 4851
   Data will be copied from USB Memory to TV set.
4. After the completion of copying to USB Memory, remove USB Memory from TV set.
   (a) For Board replacement : Data will be deleted after copying (Limited one copy).
   (b) For Hotel : Data will not be deleted and can be used for other TVs.
5. Turn off the TV set.

Note:

1. Depending on the failure of boards, function of Data copy for board replacement does not work.
2. This function can be effective among the same model numbers.

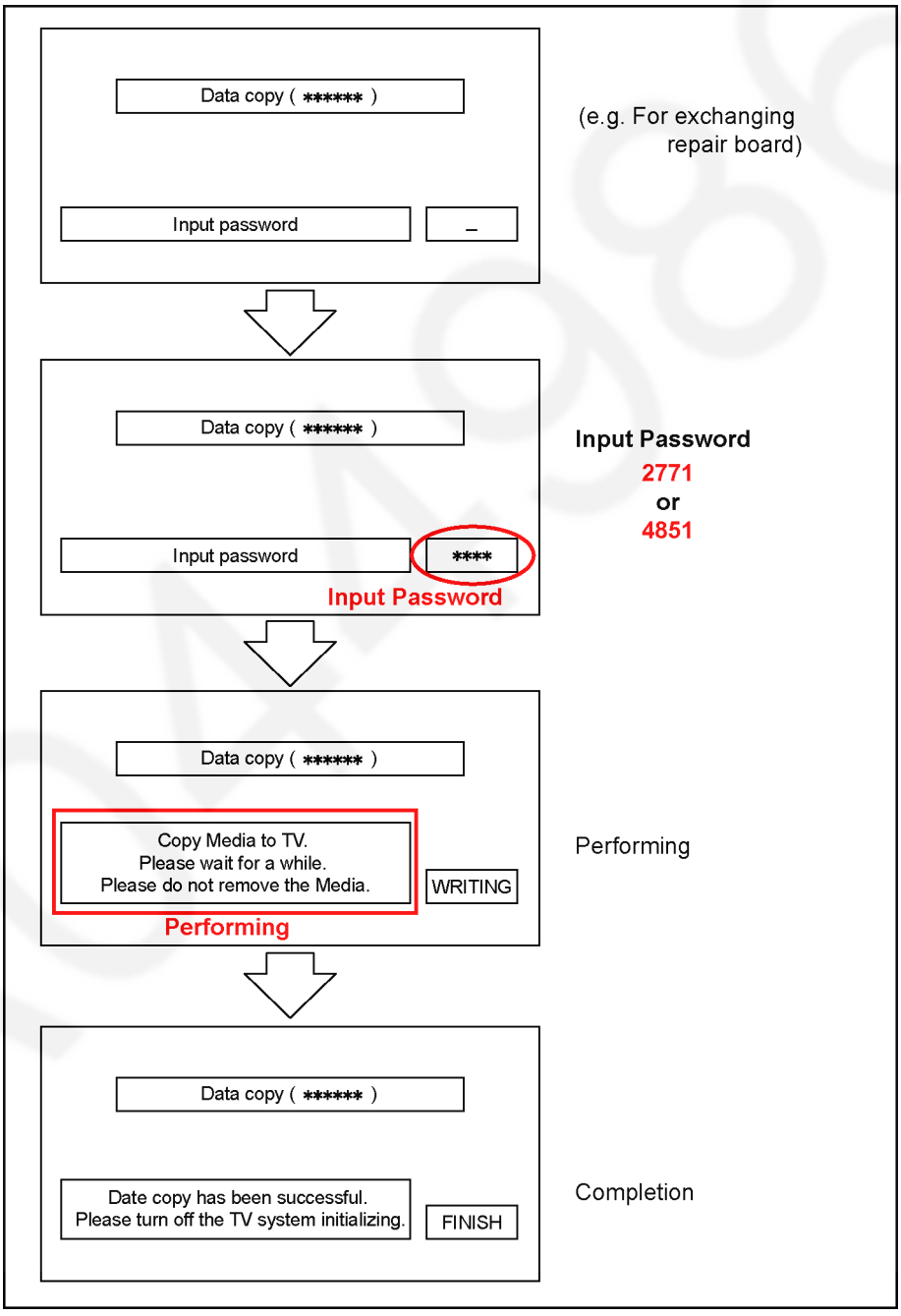

7 Troubleshooting Guide

Use the self-check function to test the unit.

1. Checking the IIC bus lines
2. Power LED Blinking timing

7.1. Check of the IIC bus lines

7.1.1. How to access

7.1.1.1. Self-check indication only:

Produce TV reception screen, and while pressing [VOLUME (-)] button on the main unit, press [OK] button on the remote control for more than 3 seconds.

7.1.1.2. Self-check indication and forced to factory shipment setting:

Produce TV reception screen, and while pressing [VOLUME (-)] button on the main unit, press [MENU] button on the remote control for more than 3 seconds.

7.1.2. Exit

Disconnect the AC cord from wall outlet or press the [POWER] button on the main unit for 3 seconds to turn off and then turn on automatically.

7.1.3. Screen display

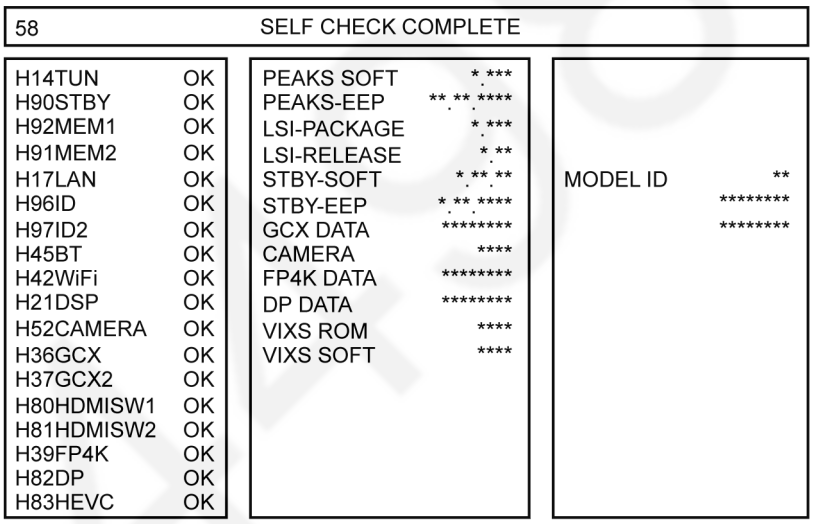

7.1.4. Check Point

Confirm the following parts if NG was displayed.

DISPLAY	Check Ref. No.	Description	Check Point
H14TUN	TU6706	TUNER	A-Board
H90STBY	IC8000	STM(Peaks-Pro4)	A-Board
H92MEM1	IC8900	NAND FLASH	A-Board
H91MEM2	IC8901	STM EEPROM	A-Board
H17LAN	IC8600	LAN	A-Board
H96ID		ID	A-Board
H97ID2		ID2	A-Board
H45BT	IC8000	BLUETOOTH	A-Board/ BT Dongle
H42WiFi	IC8000	WiFi	A-Board/ WiFi Dongle
H21DSP	IC4900	AUDIO AMP	A-Board
H52CAMERA		CAMERA	A-Board/ CAMERA
H36GCX	IC9500	GCX1-MASTER	FR-Board
H37GCX2	IC9600	GCX3-SLAVE	FR-Board
H80HDMISW1	IC3603	HDMI IC SWITCH MAIN	A-Board
H81HDMISW2	IC1501	HDMI IC SWITCH SUB	A-Board
H39FP4K	IC1500	FPGA	A-Board
H82DP	IC3500	DP-HDMI	A-Board
H83HEVC	IC6000	HEVC	HE-Board

7.2. Power LED Blinking timing chart

1. Subject
   Information of LED Flashing timing chart.
2. Contents
   When an abnormality has occurred the unit, the protection circuit operates and reset to the stand by mode. At this time, the defective block can be identified by the number of blinks of the Power LED on the front panel of the unit.

Blinking Times	Contents	Check point
1	BL_SOS	LCD Panel / P-Board
3	POWER ON	A-Board / P-Board
7	SUB_3.3V/1.2V	A-Board
9	SOUND_SOS	A-Board / Speaker
12	BACK END SOS	A-Board
13	EMERGENCY SOS	A-Board

7.3. LCD Panel test mode / FR test mode

Purpose:

To find the possible failure point where in LCD Panel, FR Board or A Board when the abnormal picture is displayed.

Procedure:

Step1. Go into LCD Panel test mode and confirm symptom

While pressing [VOLUME (-)] button of the main unit, press [OPTION] button of the remote control three times within 2 seconds.

The several test patterns generated by LCD Panel are displayed. Judge by the following method.

Still abnormal picture is dislpayed: The cause must be in LCD Panel. Exit test mode.

Normal picture is displayed: The cause must be in A Board or FR Board. Go into FR test mode.

Step2. Go into FR test mode and confirm the symptom

During in LCD Panel test mode, press [OK] button on the remote control.

The test pattern generated by FR board is displayed. Judge by the following method.

Abnormal pictures is displayed: The cause must be in FR Board.

Normal picture is displayed: The casuse must be in A Board.

Step3. How to Exit:

Switch off the power with the [POWER] button on the main unit or the [POWER] button on the remote control in LCD Panel test mode or FR test mode.

A04060

8 Disassembly and Assembly Instructions

8.1. Disassembly Flow Chart for the Unit

This is a disassembly chart.
When assembling, perform this chart conversely.

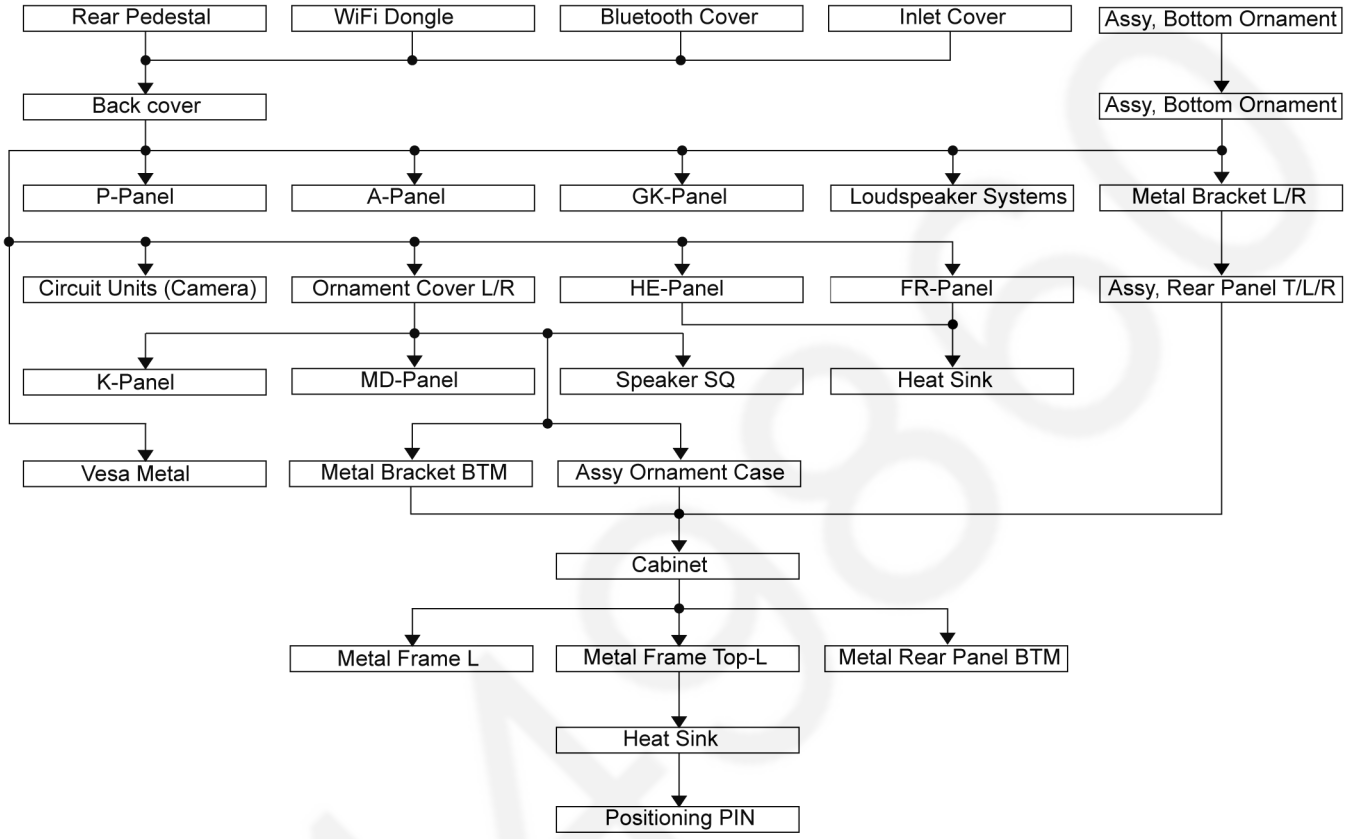

8.2. Disassembly Procedure for the Unit

8.2.1. Rear Pedestal

1. Lay down the unit so that the rear cover faces upward.
2. Remove the cover.
3. Remove the 4 screws (M4 x 14).
4. Remove the Rear pedestal.

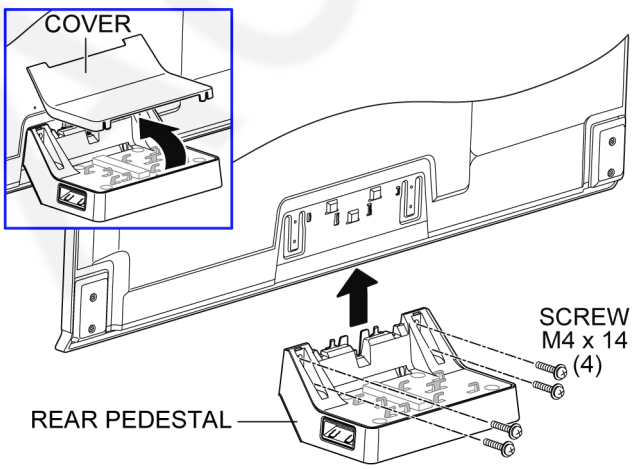

8.2.2. WiFi Dongle

1. Remove the screw (THEC1509).
2. Remove the WiFi dongle.

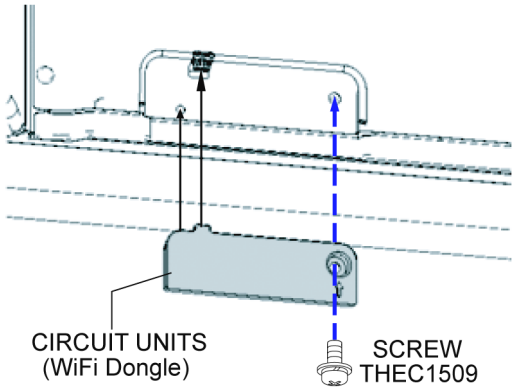

8.2.3. Bluetooth cover

1. Remove the screw (THEC1509).
2. Remove the BT cover.

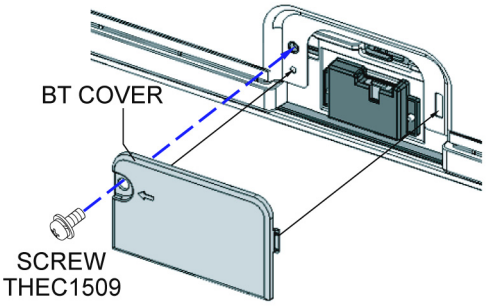

8.2.4. Inlet cover

1. Remove the screw (THEC1509).
2. Remove the Inlet cover.

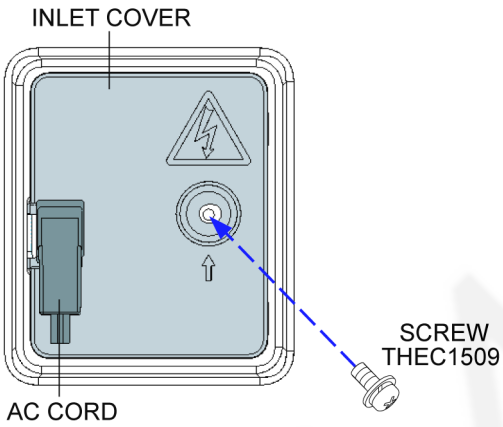

8.2.5. Bottom ornament cover L/R

1. Remove the 4 screws (THEC1509).
2. Remove the Bottom ornament cover L and R.

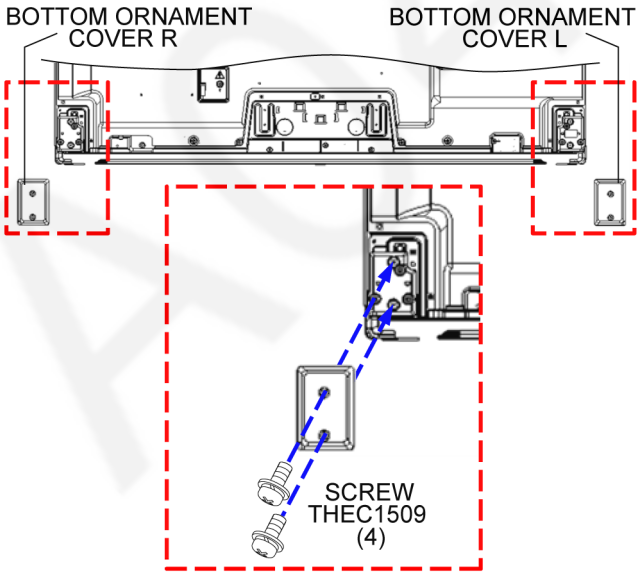

8.2.6. Back cover

1. Remove the screw (XTV3+8GFJK).
2. Remove the 4 M6 CAP.
3. Remove the 31 screws (THEC1509).
4. Remove the Back cover.

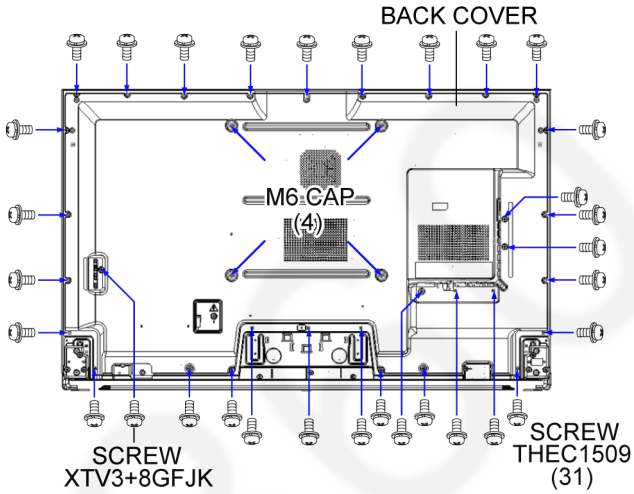

8.2.7. Circuit Units

1. Remove the 2 screw (THEJ036J).
2. Disconnect the USB Cable.
3. Remove the Circuit units.

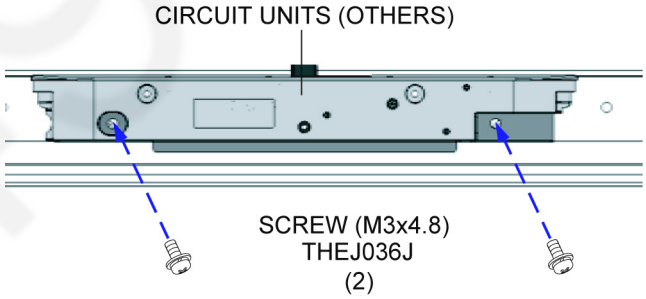

8.2.8. Bluetooth (Dongle)

1. Remove the Bluetooth module.

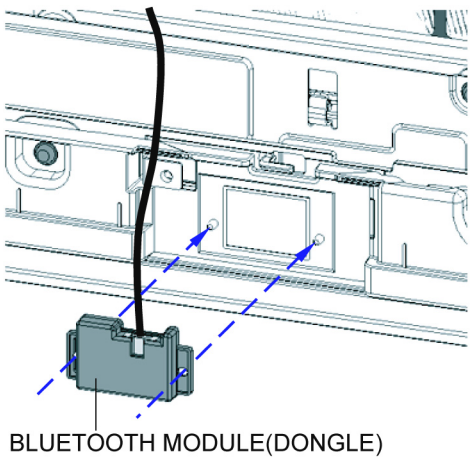

8.2.9. WiFi Cable

1. Remove the screw (THEJ036J).
2. Remove the WiFi Cable.

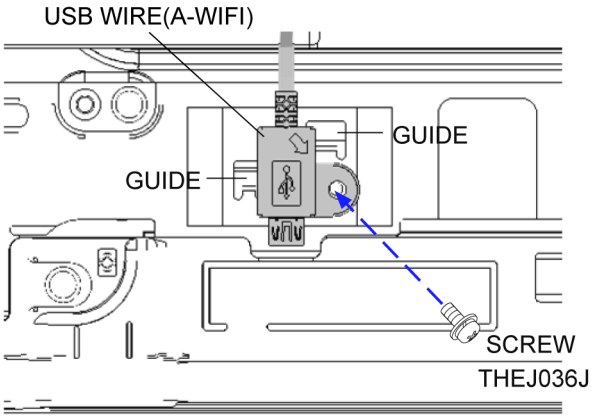

8.2.10. P-Panel

1. Disconnect the connectors P2, P4 and P5.
2. Remove the 6 screws (THEJ036J).
3. Remove the P-Panel.

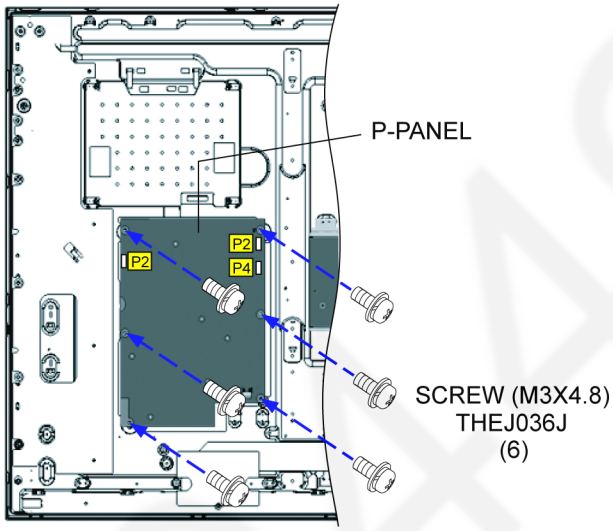

4. Remove the Barrier P-PCB.

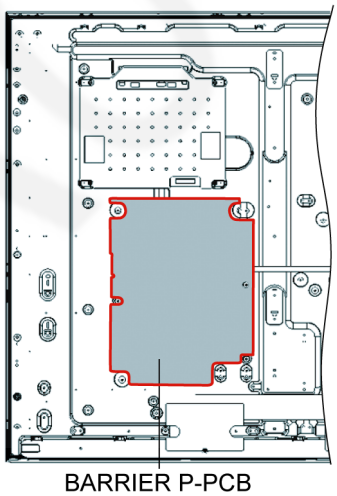

8.2.11. A-Panel

1. Remove the 3 screws (THEJ036J).
2. Remove the Side AV bracket.
3. Remove the Bottom AV bracket.

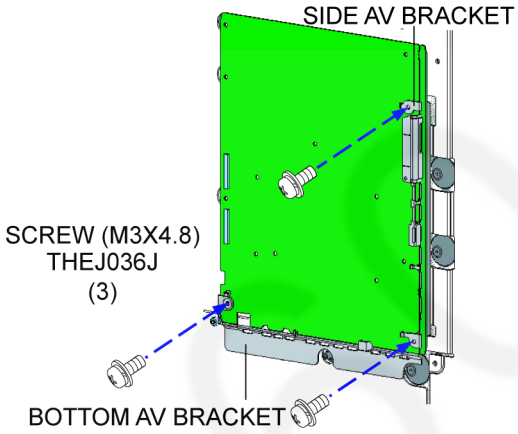

4. Disconnect the connectors A02, A10, A12, A20, A23, A40, A41 and A43.
5. Disconnect the flexible cables A15 and A16.
6. Remove the 5 screws (THEJ036J).
7. Remove the A-Panel.

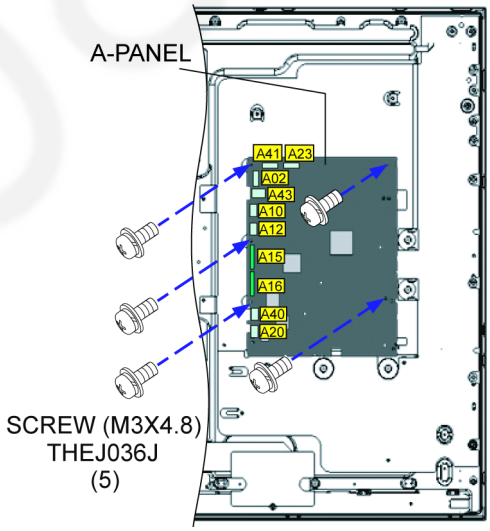

8.2.12. GK-Panel

1. Disconnect the connector GK4.
2. Remove the Key button bracket.

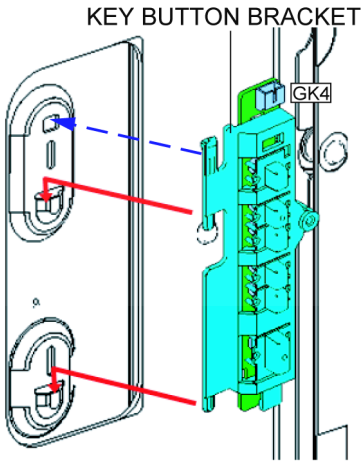

3. Remove the GK-Panel.

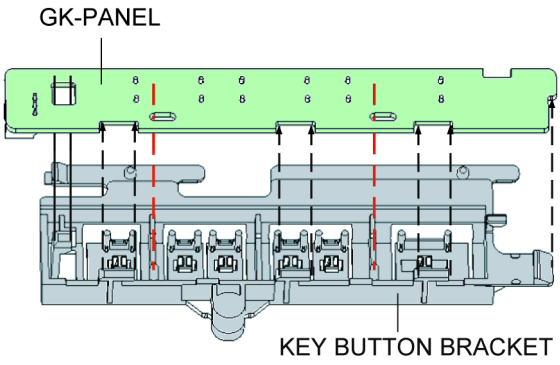

8.2.13. FR-Panel

1. Disconnect the connector FR20 and FR1.
2. Disconnect the flexible cables FR15, FR16, FR11 and FR12.
3. Remove the 4 screws (THEJ036J).
4. Remove the FR-Panel.

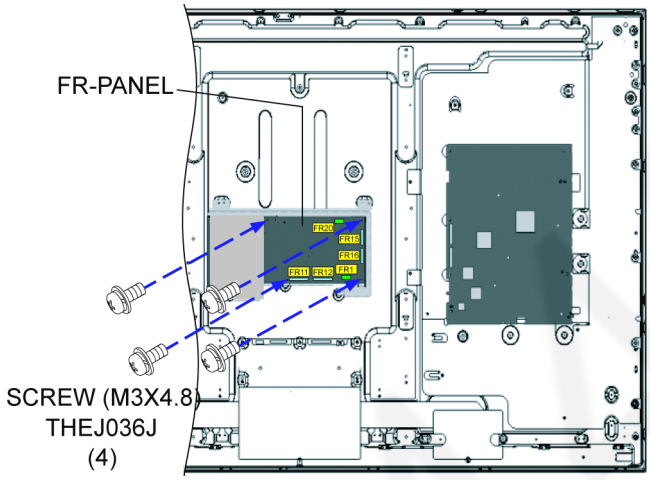

8.2.14. HE-Panel

1. Disconnect the connector HE40, HE41 and HE42.
2. Remove the 3 screws (THEJ036J).
3. Remove the HE-Panel.

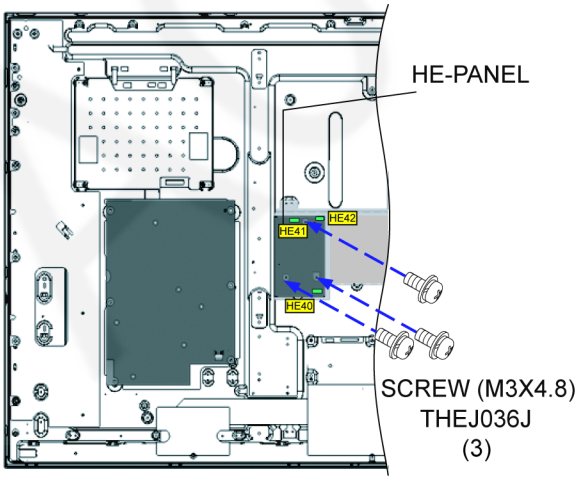

8.2.15. Heat Sink FR-Panel and HE-Panel

1. Remove the 4 screws (THEJ036J).
2. Remove the Heat sink.

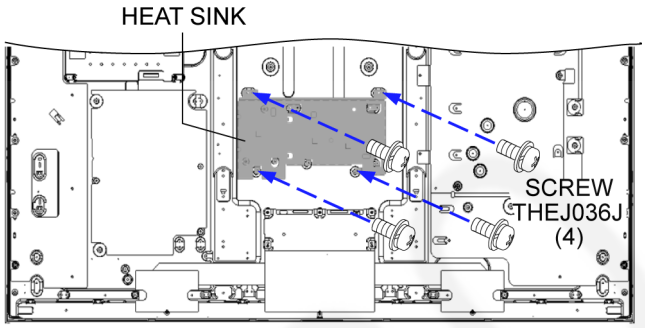

8.2.16. Ornament Cover L/R

1. Remove the 3 screws (XTV3+8GFJK).
2. Remove the 4 screws (THEJ036J).
3. Remove the Ornament cover L/R.

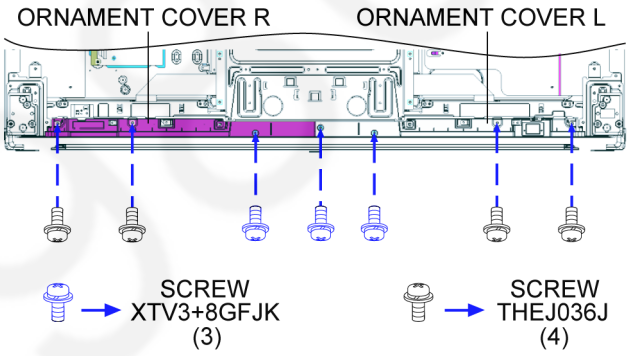

8.2.17. Assy Bottom Ornamet

1. Remove the 6 screws (XYN4+F10FJ).
2. Remove the Assy Bottom Ornament.

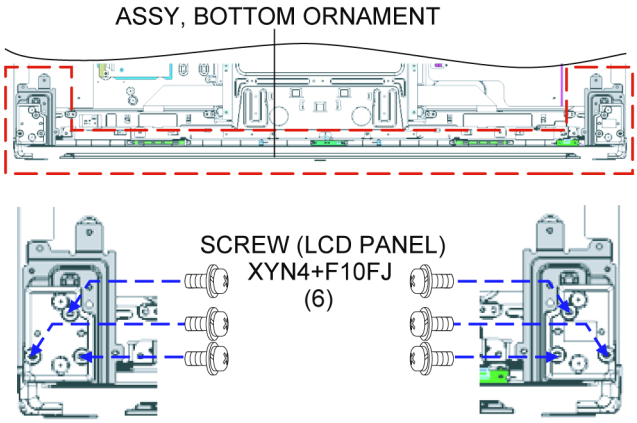

8.2.18. Metal Bracket L/R

1. Remove the 4 screws (THEC1509).
2. Remove the Metal Bracket L/R.

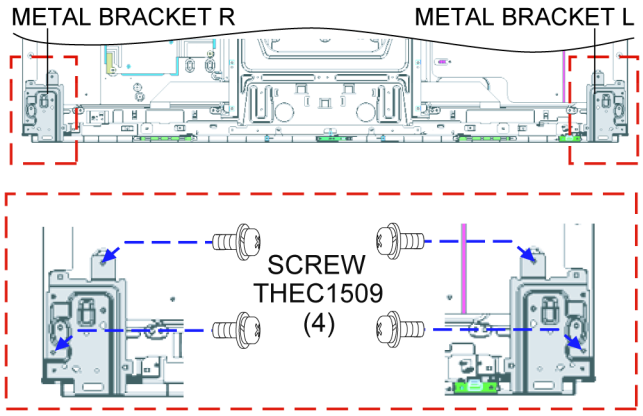

8.2.19. Loudspeaker Systems

1. Remove the 3 screws (THEJ056J).
2. Remove the Loudspeaker Systems.

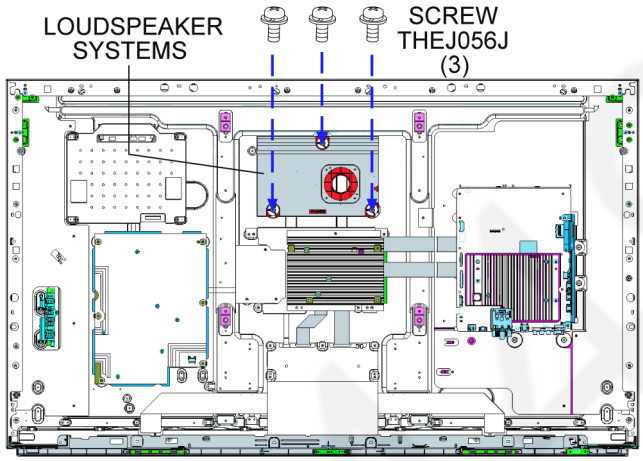

8.2.20. Speaker SQ

1. Remove the 2 speakers SQ.

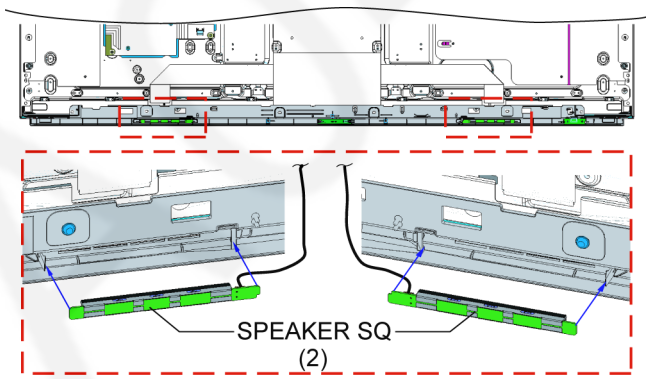

8.2.21. Metal Bracket BTM

1. Remove the 6 screws (THEJ024).
2. Remove the Metal Bracket BTM.

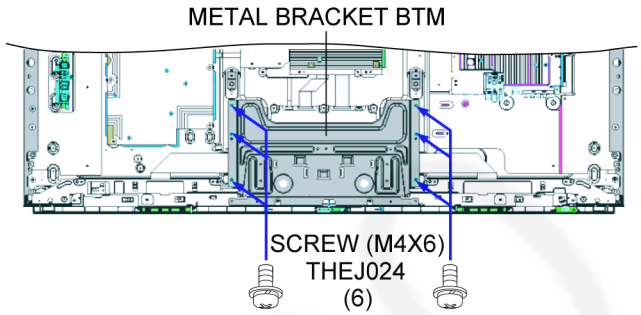

8.2.22. MD-Panel

1. Remove the MD-Panel.
2. Disconnect the connector MD1.
3. Remove the IR motion sensor.

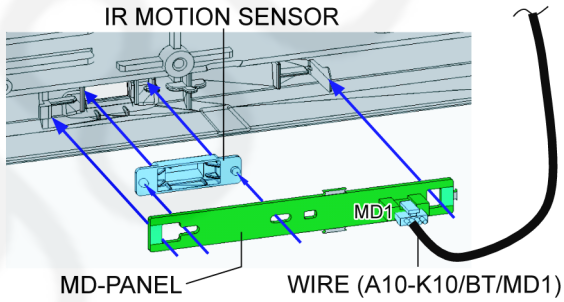

8.2.23. K-Panel

1. Remove the K-Panel.
2. Disconnect the connector K10.
3. Remove the LED panel.

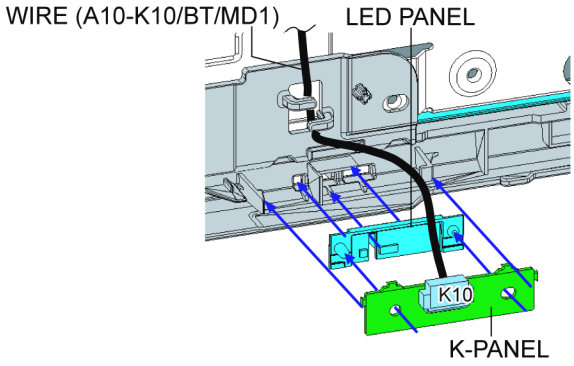

8.2.24. Assy Ornament Case

1. Remove the 2 screws (THEJ036J).
2. Remove the Assy Ornament Case.

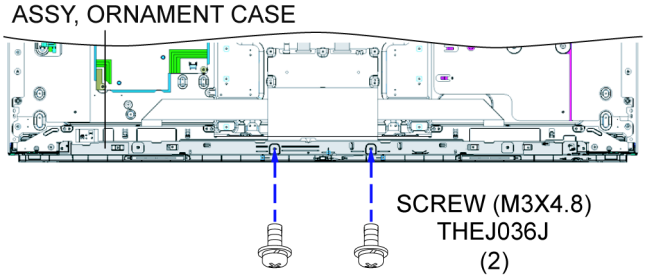

8.2.25. Vesa Metal

1. Remove the 4 screws (THEJ024).
2. Remove the 4 vesa metals.

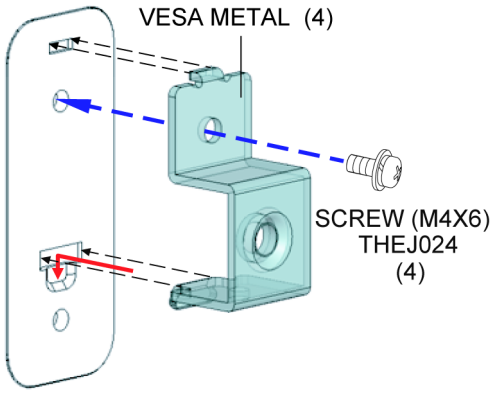

8.2.26. Assy, Rear Panel T/L/R.

1. Remove the 4 screws (THEC1509).
2. Remove the Assy Rear panel T, L and R.

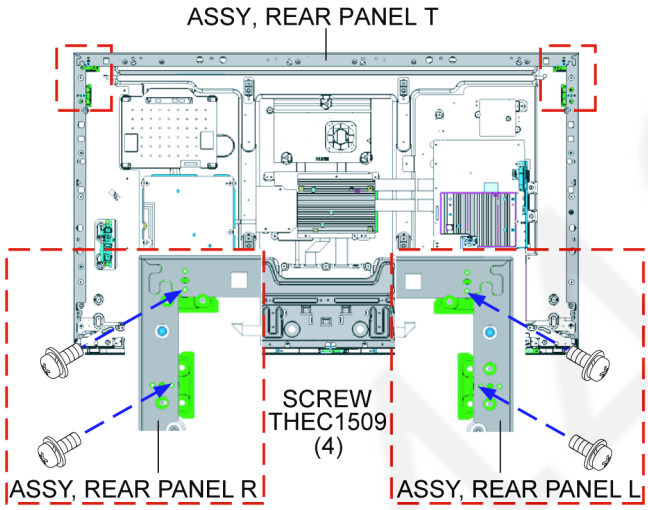

8.2.27. Cabinet

1. Remove the 12 screws (THEC151J).

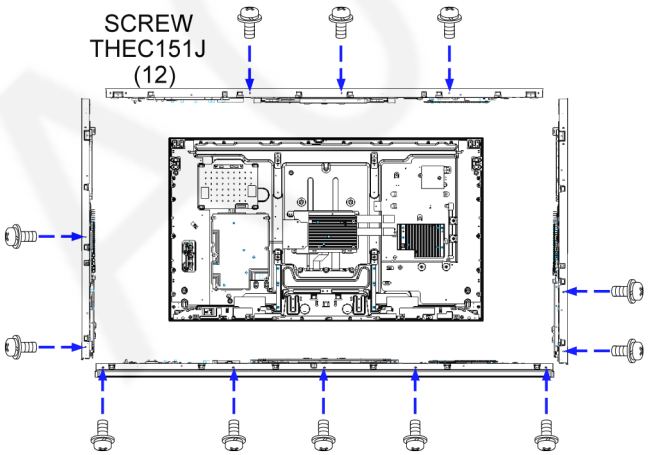

2. Remove the Cabinet.

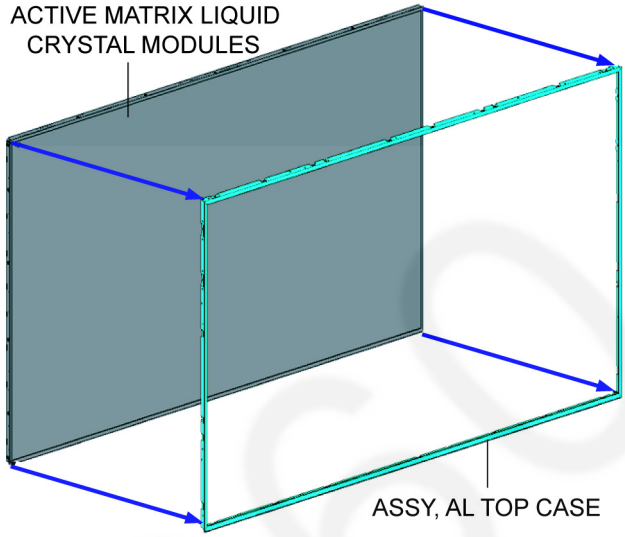

8.2.28. Metal Frame TOP-L

1. Remove the 10 screws (THEJ036J).
2. Remove the 4 Metal Frame TOP-L.

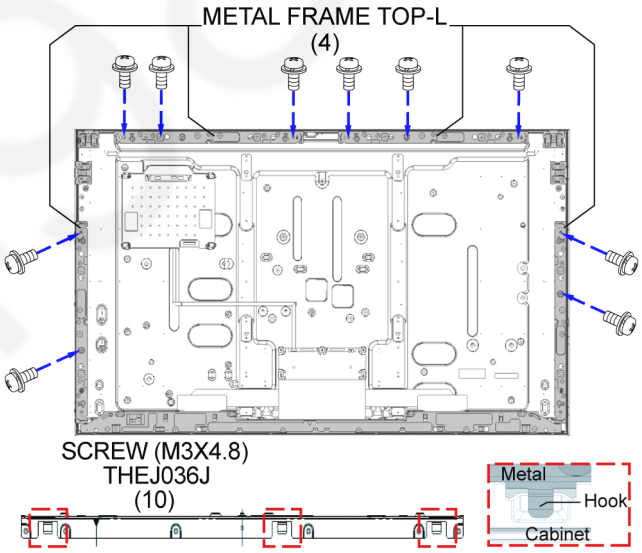

8.2.29. Metal Rear Panel BTM

1. Remove the 4 screws (THEJ036J).
2. Remove the Metal Rear Panel BTM.

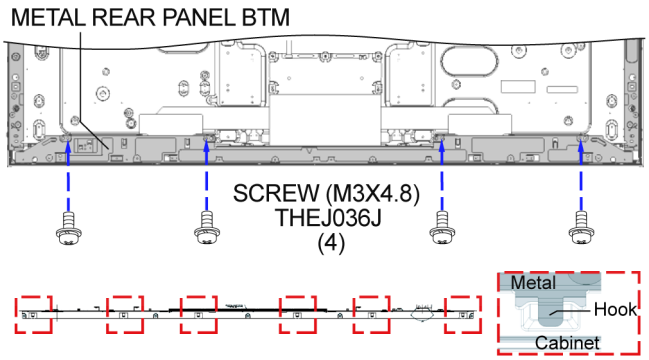

8.2.30. Metal Frame L

1. Remove the 4 screws (THEJ036J).
2. Remove the 4 Metal Frame L.

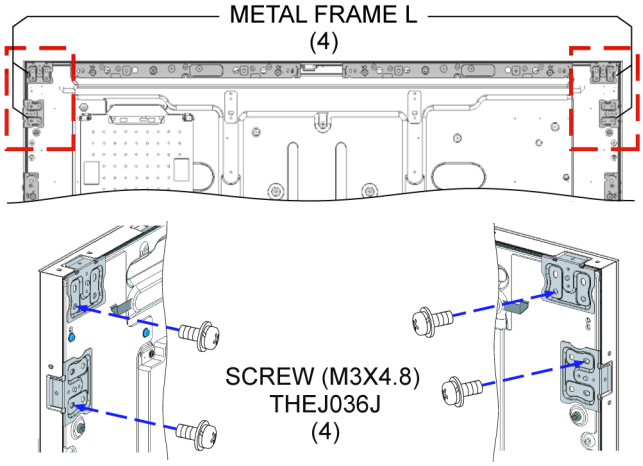

8.2.31. Heat Sink

1. remove the 17 screws (THEJ036J).
2. Remove the 2 Heat Sink.

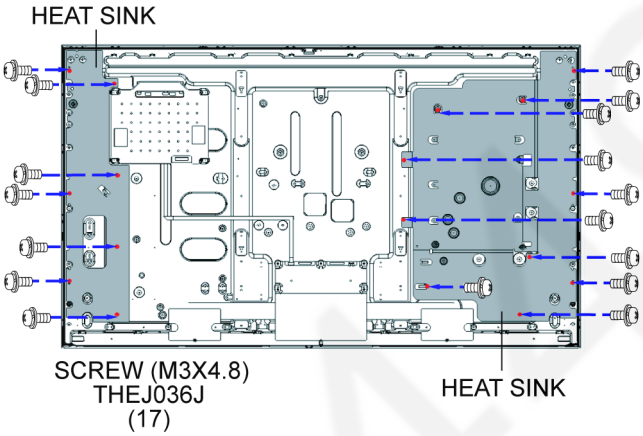

8.2.32. Positioning PIN

1. Remove the 2 positioning PIN.

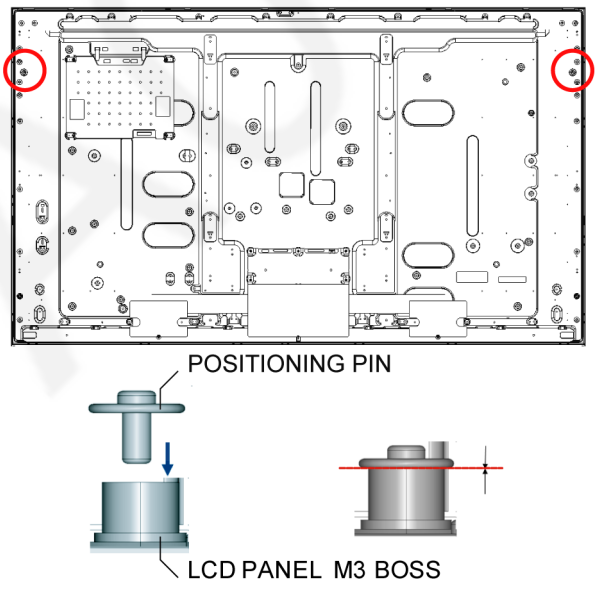

8.2.33. EMI processing

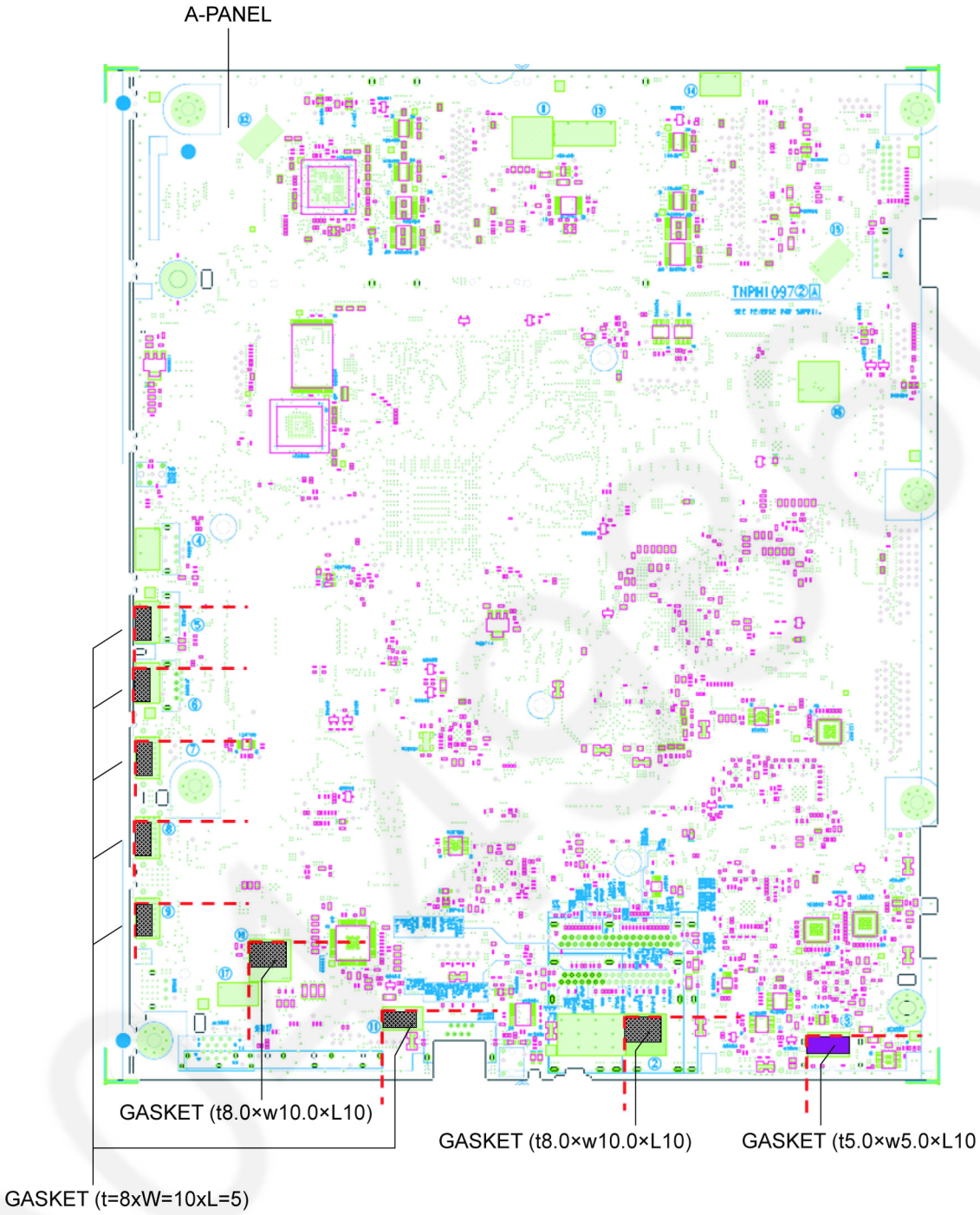

A-PANEL FRONT VIEW

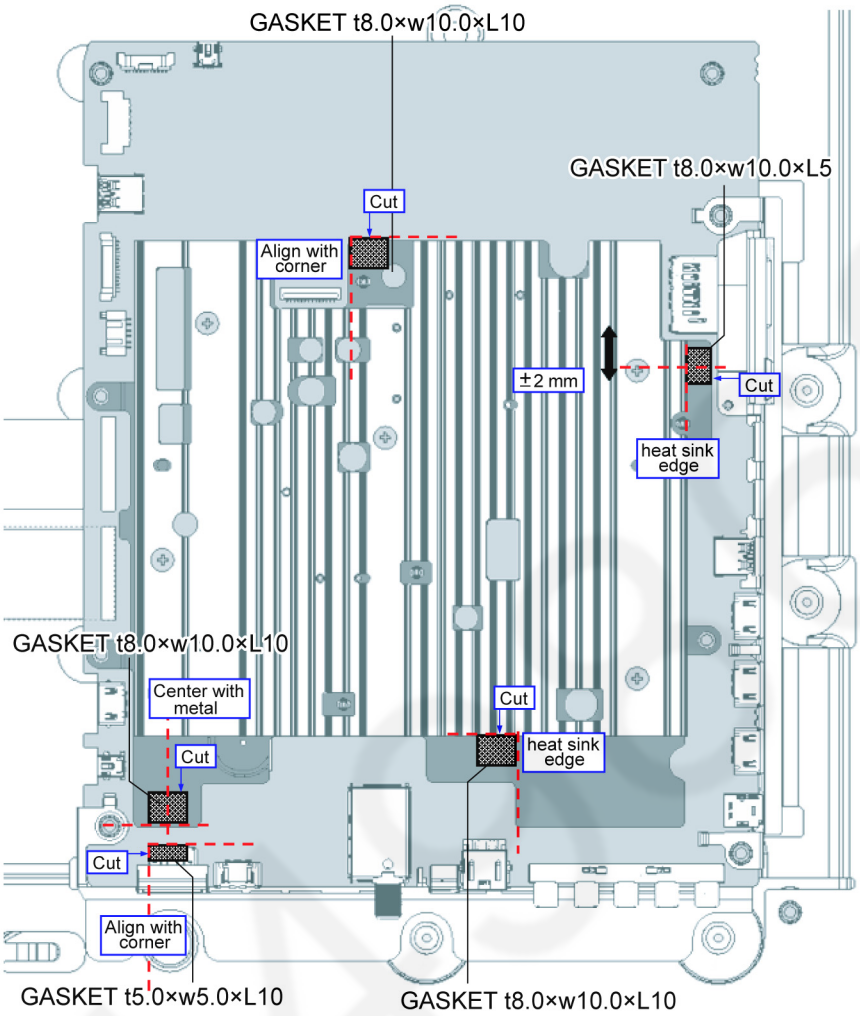

A042B00

A-PANEL FRONT VIEW

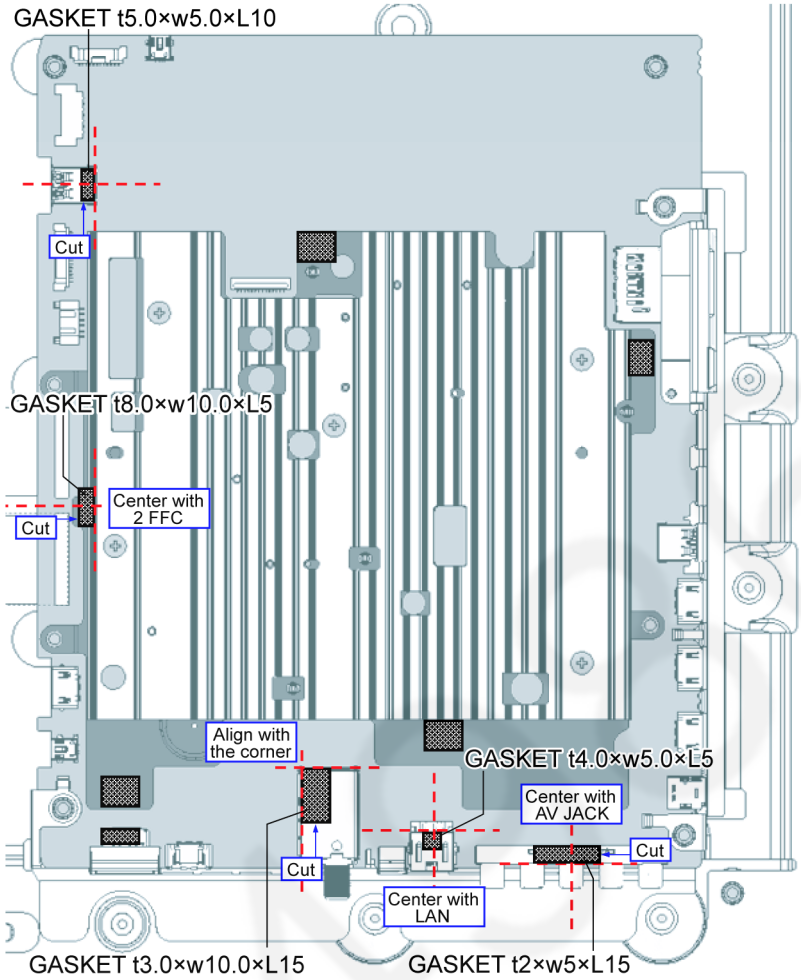

A0424500

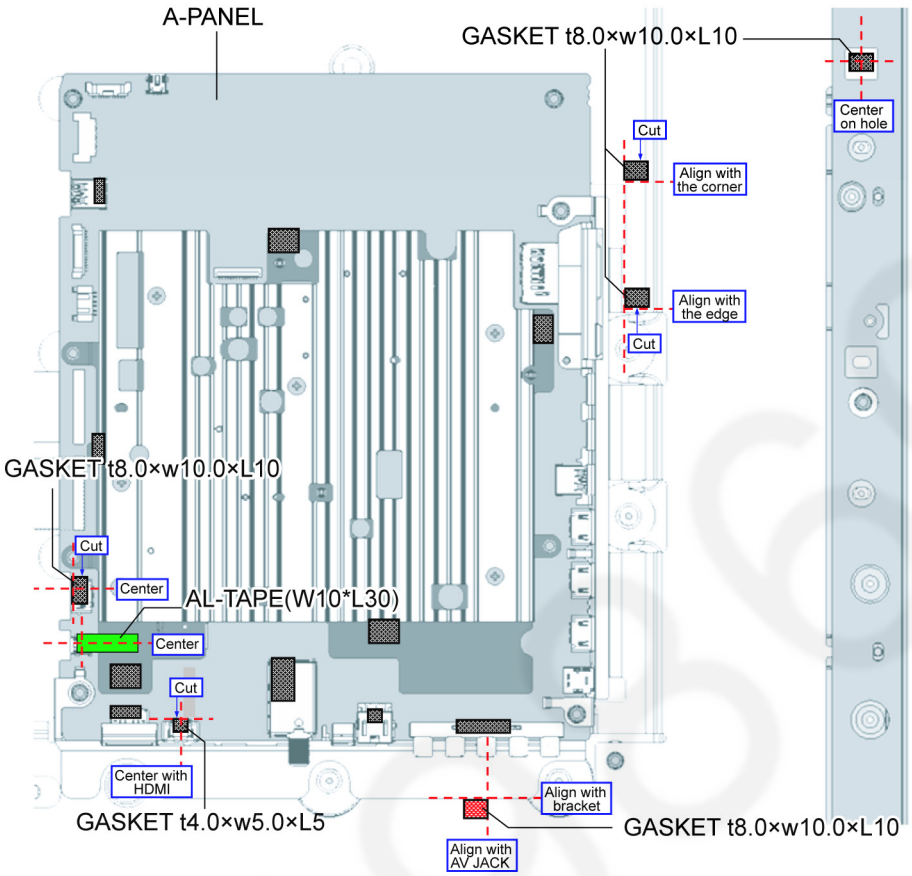
A-PANEL
GASKET t8.0×w10.0×L10
Center on hole
Cut
Align with the corner
Align with the edge
Cut
GASKET t8.0×w10.0×L10
Cut
Center
AL-TAPE(W10*L30)
Center
Cut
Center with HDMI
GASKET t4.0×w5.0×L5
Align with bracket
Align with AV JACK
GASKET t8.0×w10.0×L10

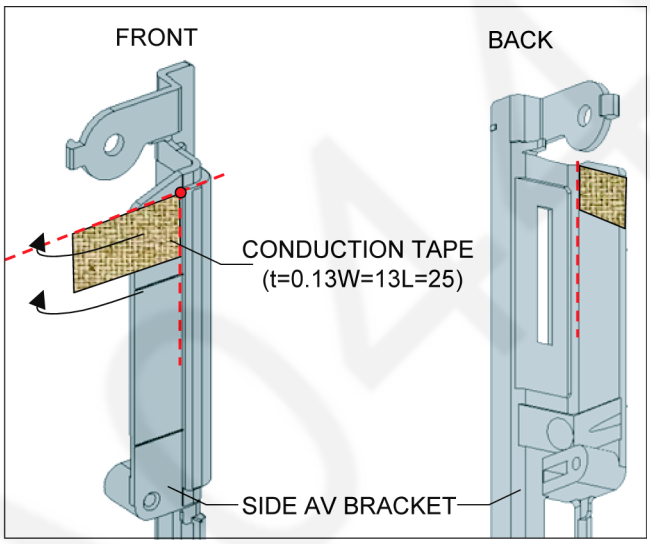
FRONT
BACK
CONDUCTION TAPE
(t=0.13W=13L=25)
SIDE AV BRACKET

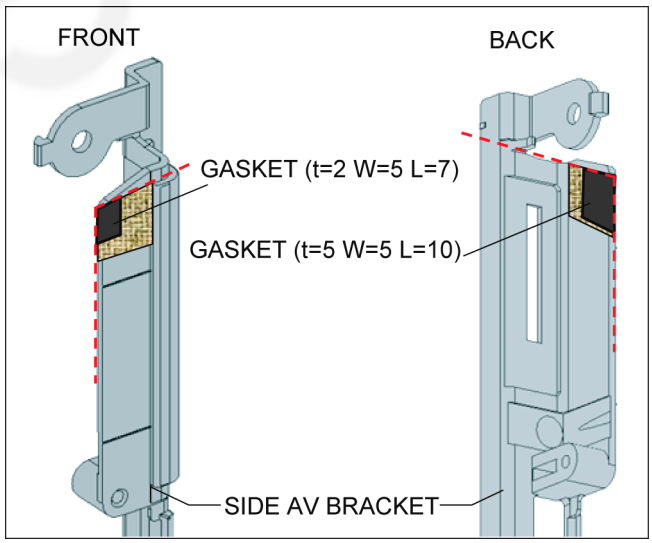
FRONT
BACK
GASKET (t=2 W=5 L=7)
GASKET (t=5 W=5 L=10)
SIDE AV BRACKET

P-PANEL FRONT VIEW

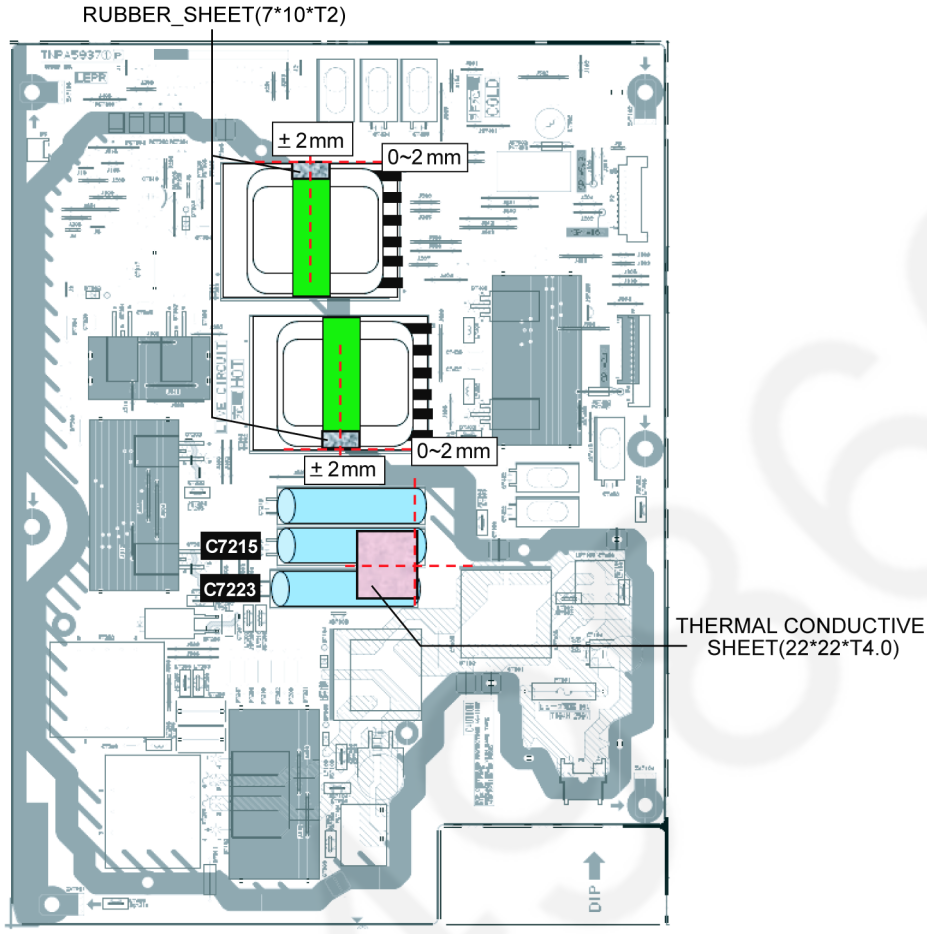

A0443860

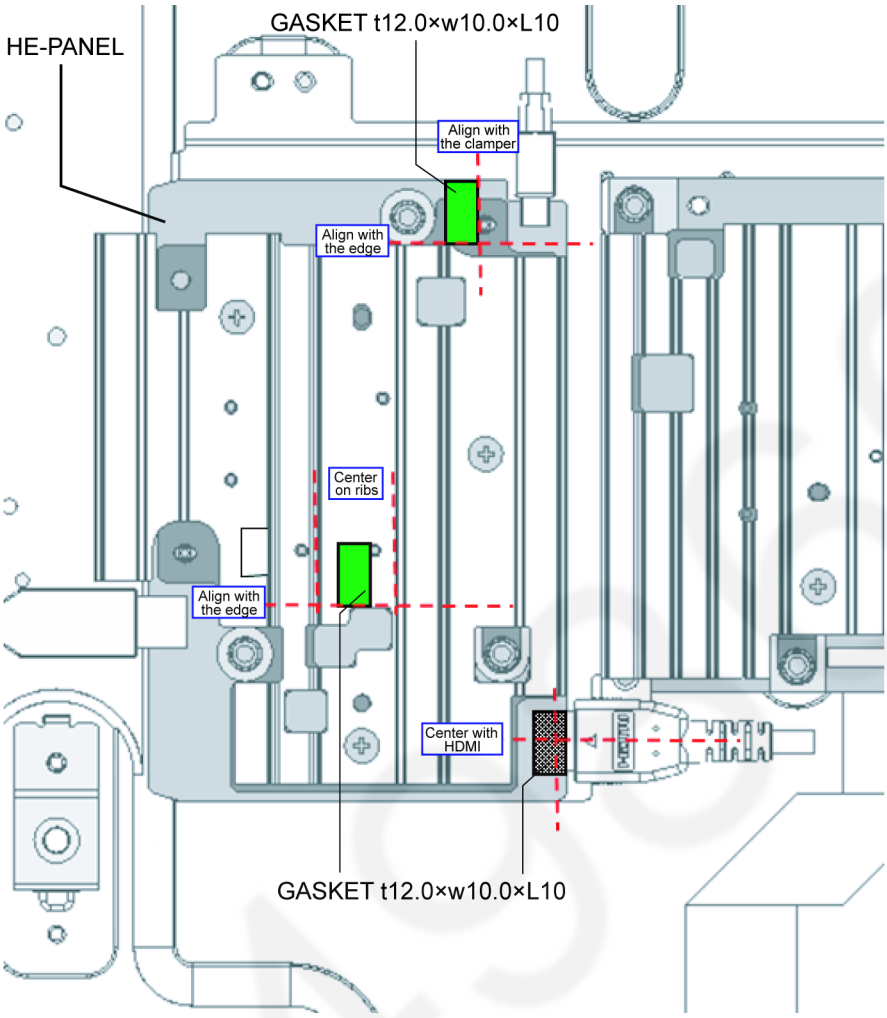
HE-PANEL
GASKET t12.0×w10.0×L10
Align with the clamper
Align with the edge
Center on ribs
Align with the edge
Center with HDMI
GASKET t12.0×w10.0×L10

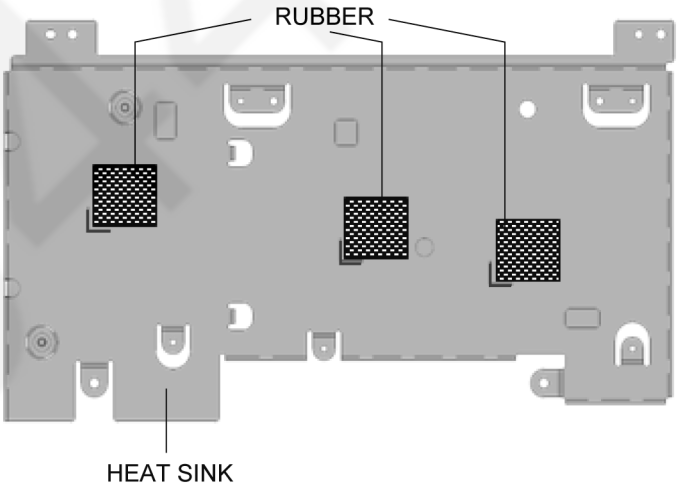
RUBBER
HEAT SINK

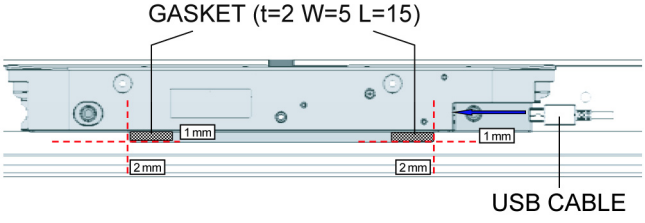
GASKET (t=2 W=5 L=15)
1 mm
1 mm
2 mm
2 mm
USB CABLE

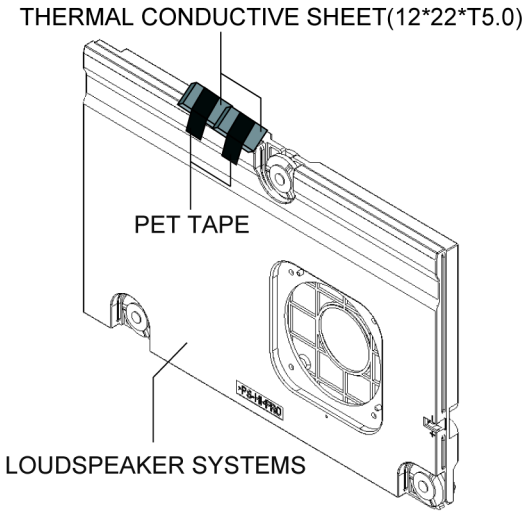
THERMAL CONDUCTIVE SHEET(12*22*T5.0)
PET TAPE
LOUDSPEAKER SYSTEMS

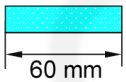
60 mm
2 pcs

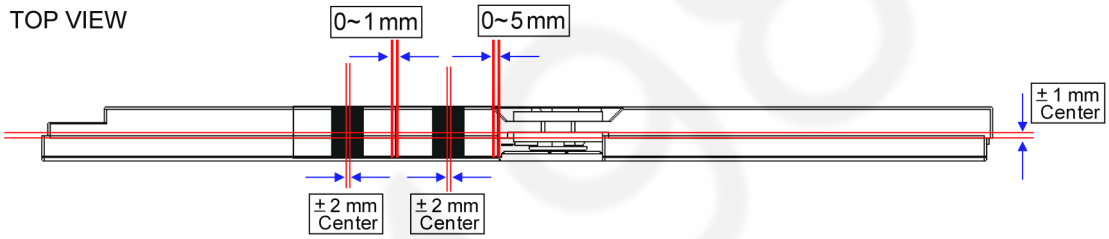
TOP VIEW
0~1 mm
0~5 mm
± 1 mm
Center
± 2 mm
Center
± 2 mm
Center

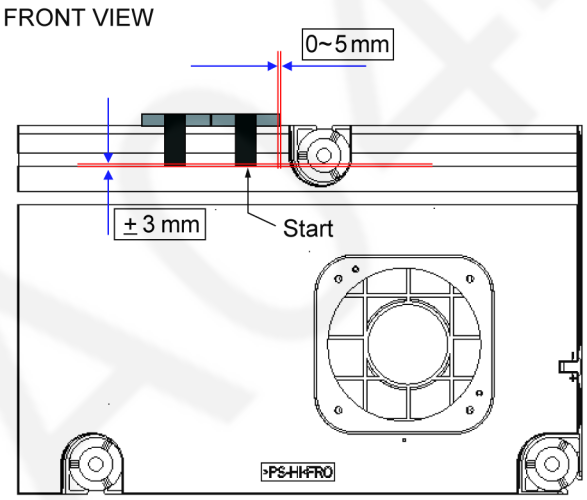
FRONT VIEW
0~5 mm
± 3 mm
Start

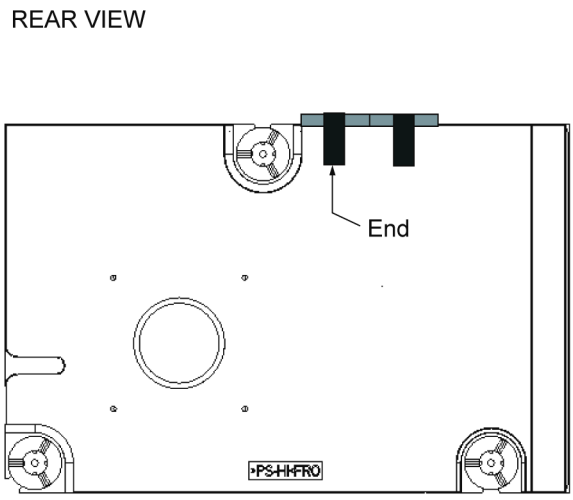
REAR VIEW
End

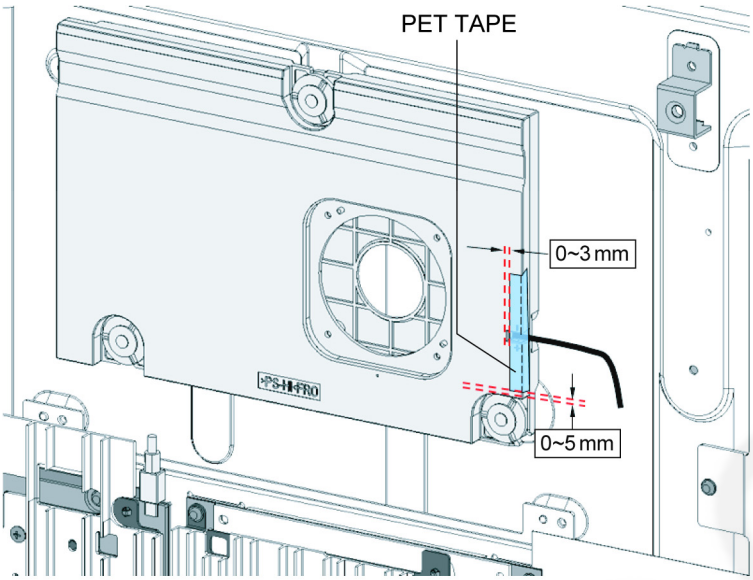
PET TAPE
0~3 mm
0~5 mm

60 mm
1 piece

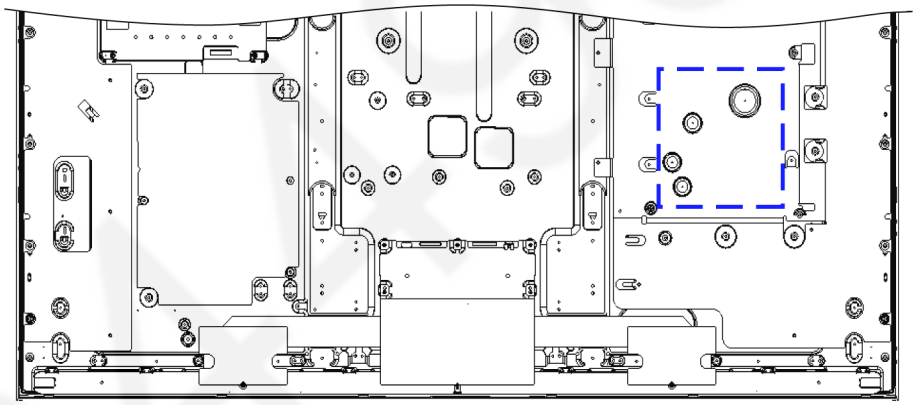

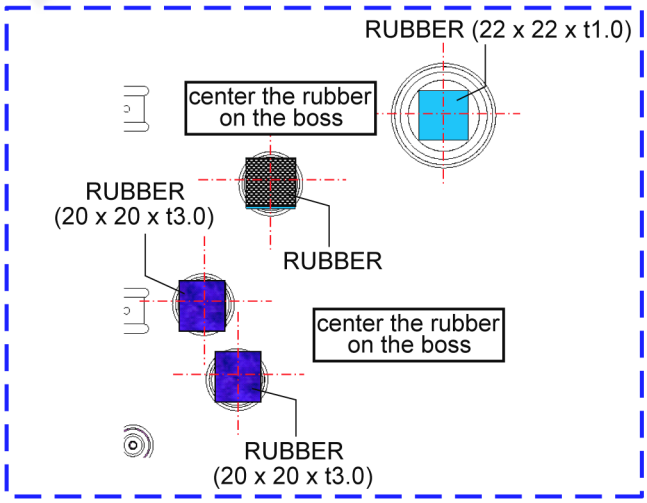
RUBBER (22 x 22 x t1.0)
center the rubber on the boss
RUBBER (20 x 20 x t3.0)
RUBBER
center the rubber on the boss
RUBBER (20 x 20 x t3.0)

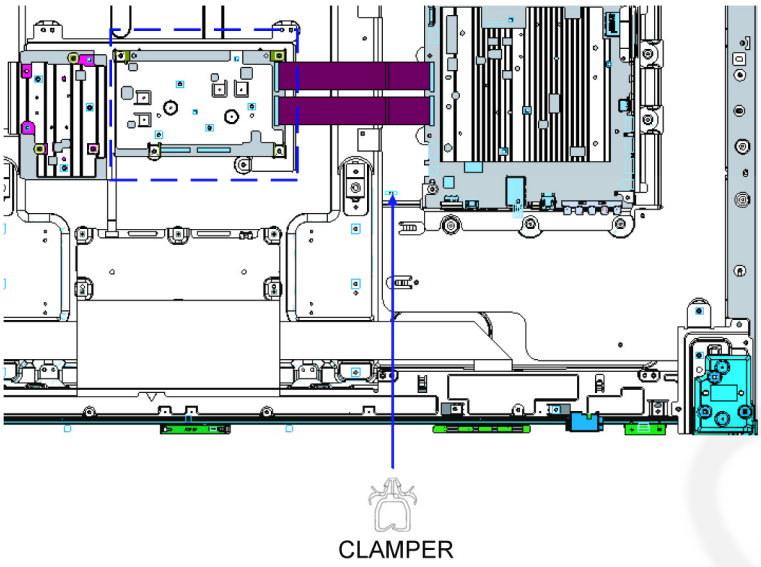
CLAMPER

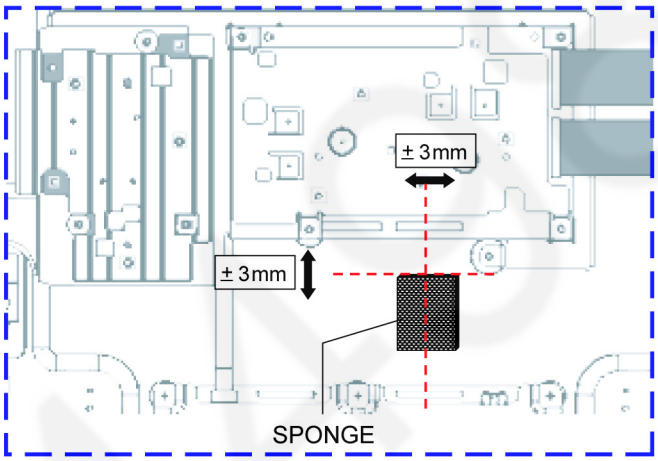
± 3mm
± 3mm
SPONGE

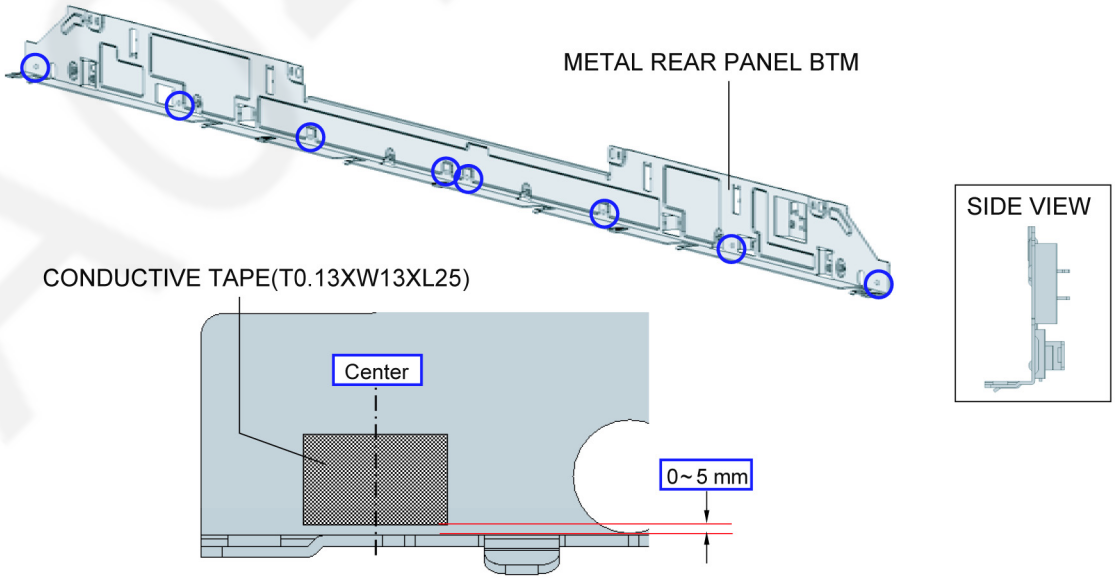
METAL REAR PANEL BTM
SIDE VIEW
CONDUCTIVE TAPE(T0.13XW13XL25)
Center
0~5 mm

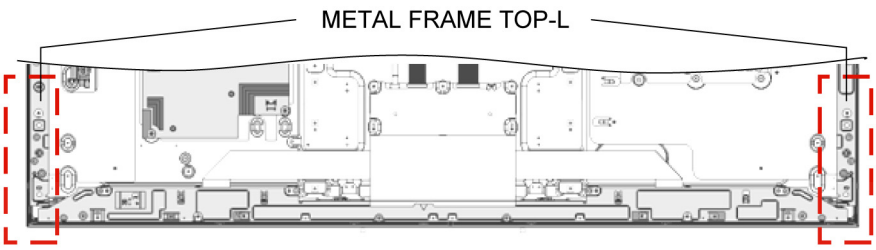

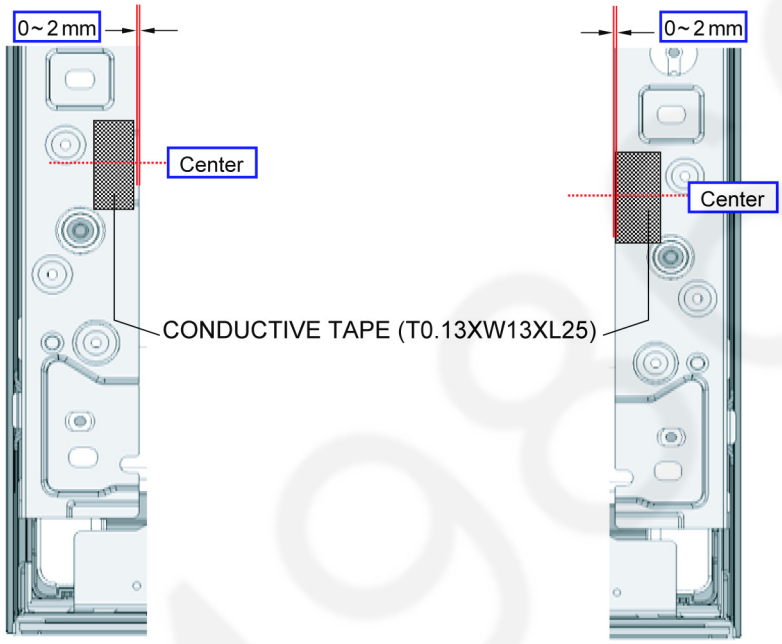

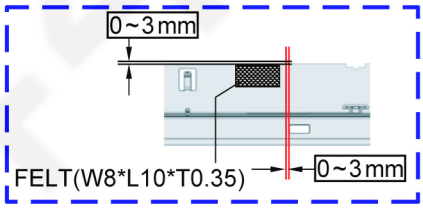

SIDE VIEW

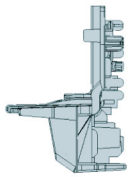

ASSY, ORNAMENT CASE

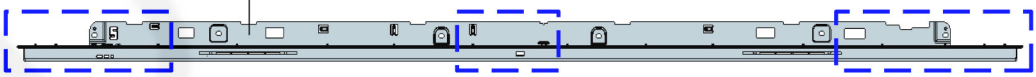

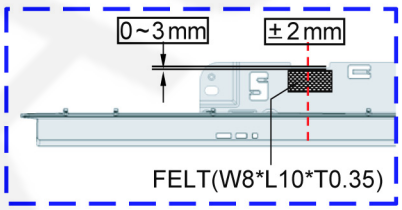

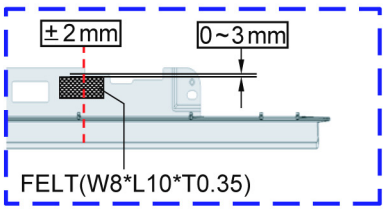

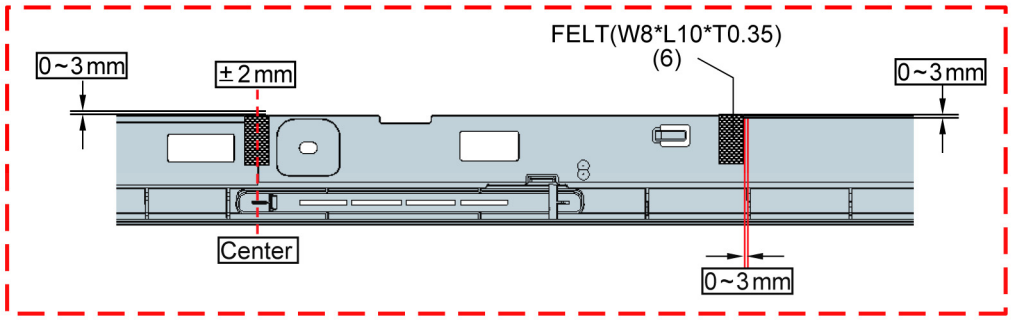
FELT(W8*L10*T0.35)
(6)
0~3mm
±2mm
0~3mm
Center
0~3mm

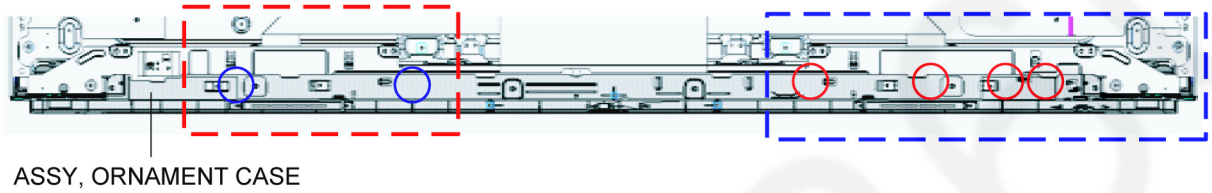
ASSY, ORNAMENT CASE

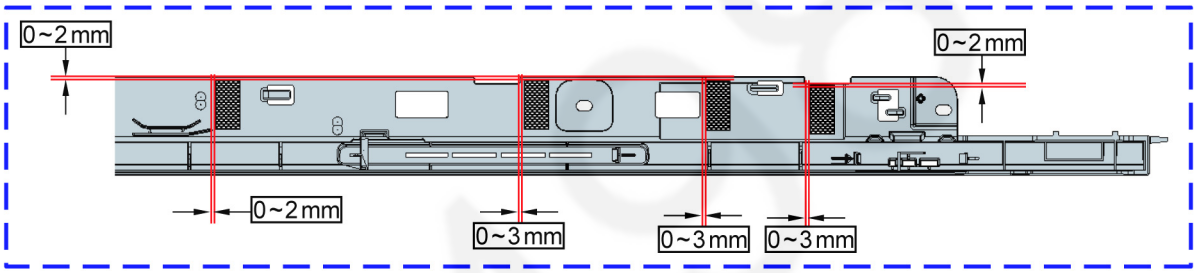
0~2mm
0~2mm
0~2mm
0~3mm
0~3mm
0~3mm

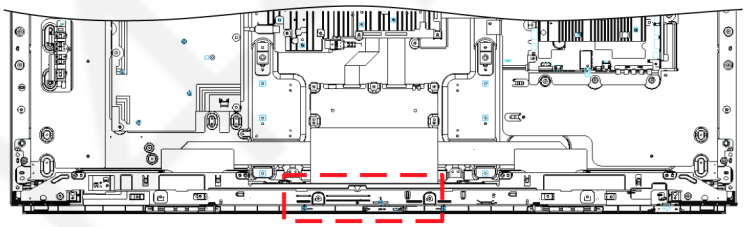

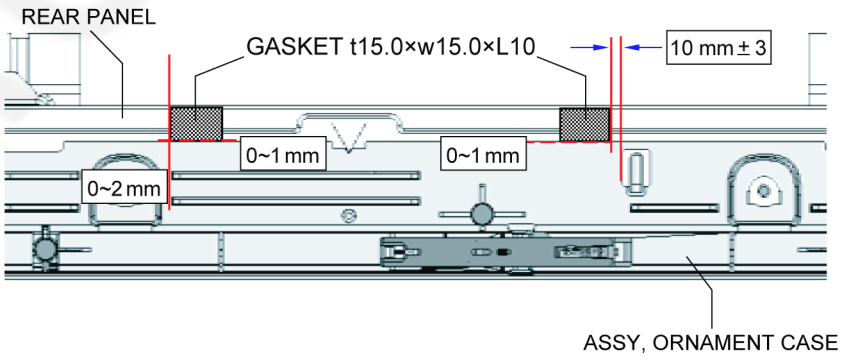
REAR PANEL
GASKET t15.0×w15.0×L10
10 mm±3
0~1mm
0~1mm
0~2mm
ASSY, ORNAMENT CASE

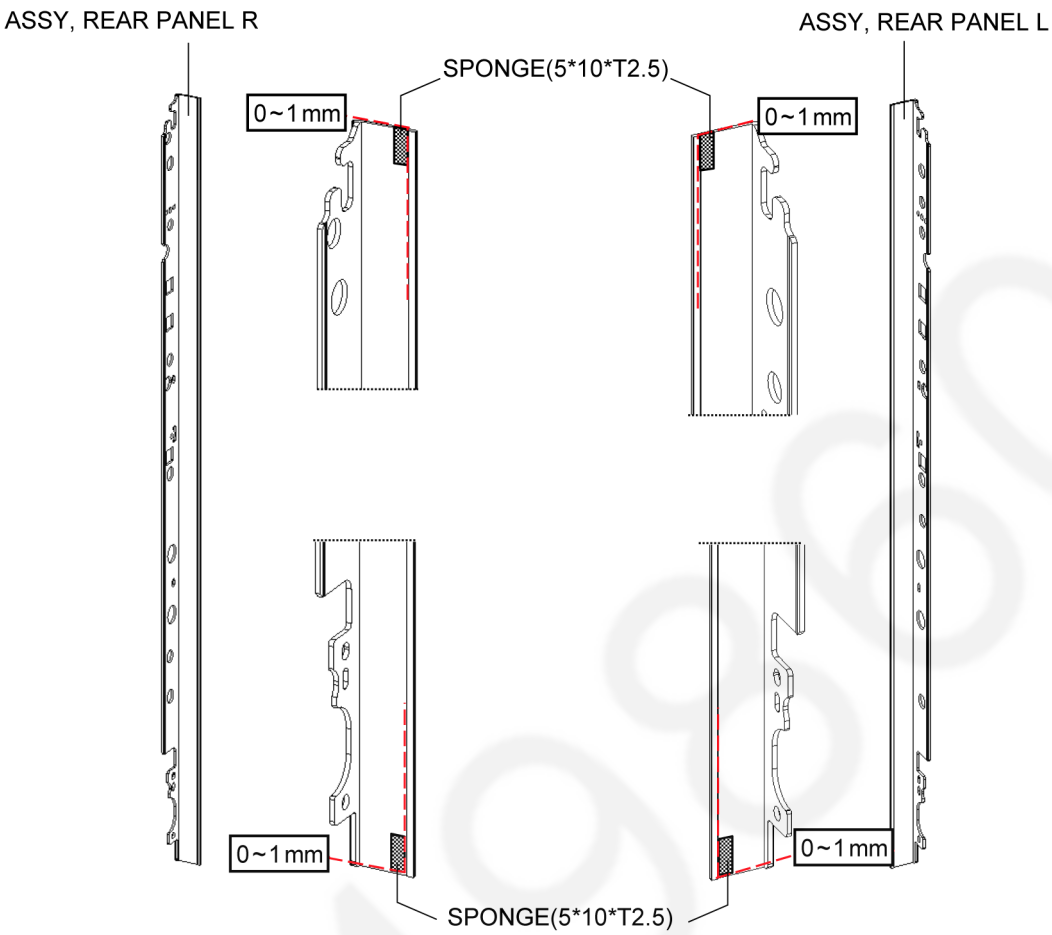
ASSY, REAR PANEL R
ASSY, REAR PANEL L
SPONGE(5*10*T2.5)
0~1 mm
0~1 mm
0~1 mm
0~1 mm
SPONGE(5*10*T2.5)

A0449800

9 Measurements and Adjustments

9.1. Voltage chart of A-Board

VOLTAGE	TEST POINT	SPECIFICATION
SUB5V	TP5420	4.80V - 5.30V
USB5V	TP5440	5.00V - 5.40V
SUB3.3V	TP5401	3.20V - 3.50V
SUB1.5V	TP8101	1.38V - 1.54V
SUB1.1V	TP8100	1.00V - 1.24V
FPGA1.0V	TP1803	0.96V - 1.06V
FPGA1.0V_2	TP1808	0.96V - 1.06V
FPGA1.2V	TP1804	1.14V - 1.26V
FPGA1.5V	TP1807	1.44V - 1.59V
FPGA1.8V	TP1811	1.71V - 1.89V
FPGA1.8V_2	TP1809	1.71V - 1.89V
FPGA2.5V	TP1806	2.38V - 2.63V
DP3.3V	TP1810	3.20V - 3.50V
DP1.2V	TP1830	1.10V - 1.28V
HDMI1.1V	TP1802	1.05V - 1.19V

9.2. Voltage chart of P-Board

VOLTAGE	TEST POINT	SPECIFICATION	
		STEP 1	STEP 2
24V	TP7407	< 1V	24 ± 1.2V
16V	TP7410	< 1V	16 ± 0.8V
5VS	TP7501	5.25 ± 0.25V	5.25 ± 0.25V
PFC	TP7201 or TP7202	< 340V	390 ± 15V *HOT

9.3. Voltage chart of HE-Board

VOLTAGE	TEST POINT	SPECIFICATION
HEVC_1.1V	TP6120	1.050V - 1.150V
HEVC_1.5V	TP6122	1.425V - 1.575V
HEVC_3.3V	TP6123	3.130V - 3.470V
HEVC_2.5V	TP6121	2.370V - 2.630V
HE_5V	TP6531	5.000V - 5.400V

9.4. Voltage chart of FR-Board

VOLTAGE	TEST POINT	SPECIFICATION
PNL12V	TP9295/ TP9296	11.50V - 12.50V
GCX3.3V	TP9030	3.17V - 3.45V
GCX1.1V	TP9500	1.09V - 1.21V
GCX1.5V	TP9501	1.41V - 1.53V
GCX_2_1.1V	TP9600	1.09V - 1.21V
GCX_2_1.5V	TP9601	1.41V - 1.53V

10 Block Diagram

10.1. Main Block Diagram

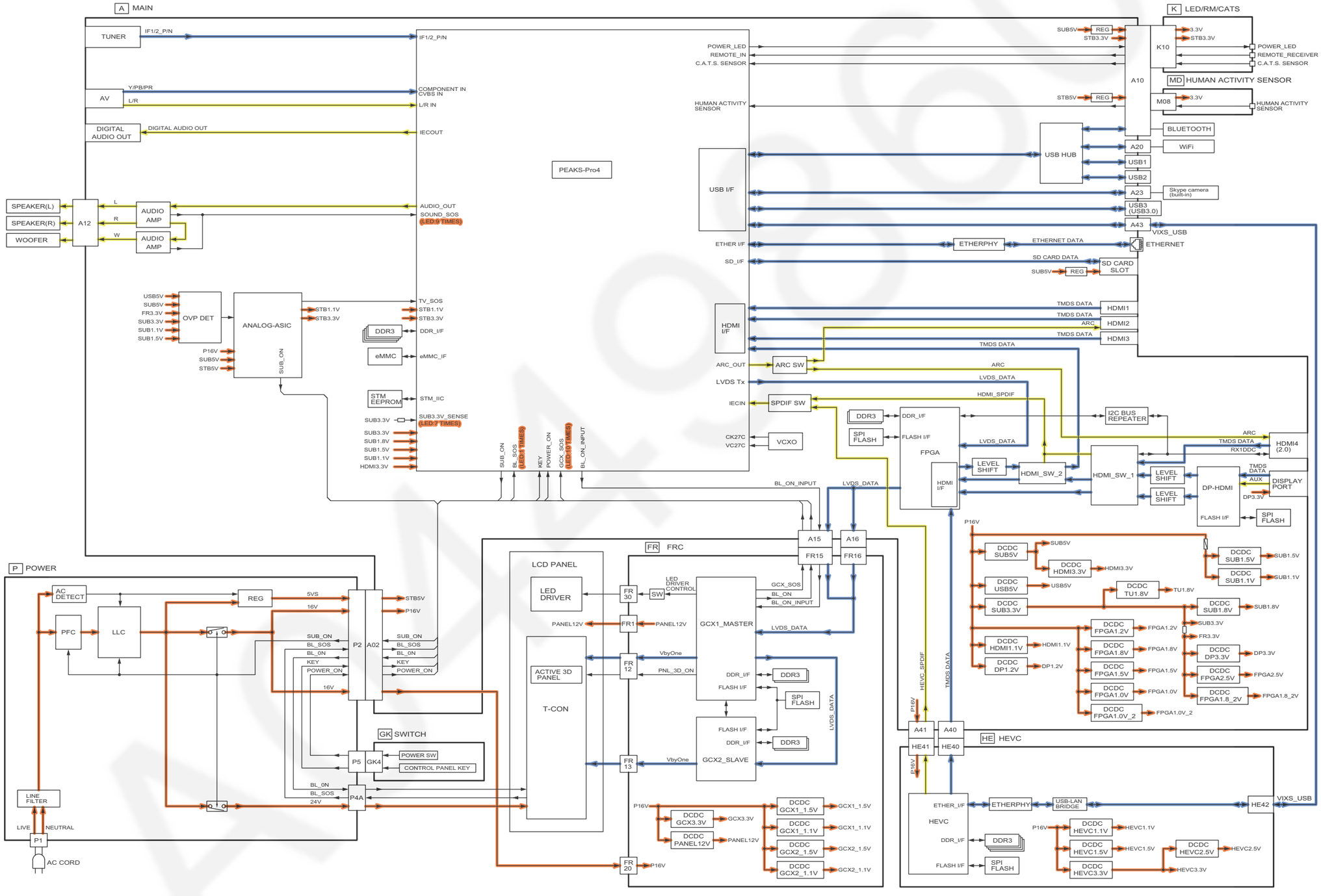

10.2. Block (1/3) Diagram

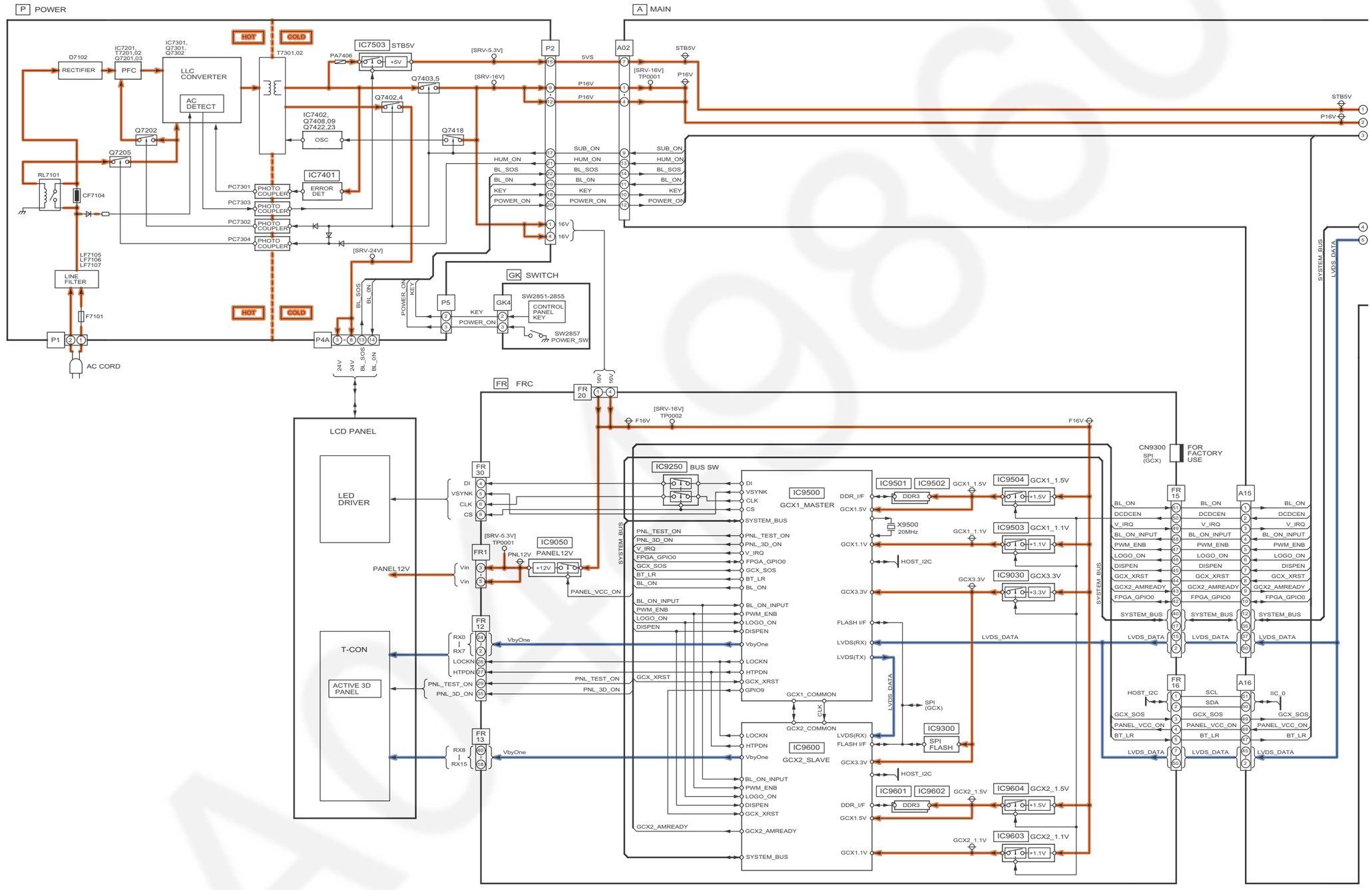

10.3. Block (2/3) Diagram

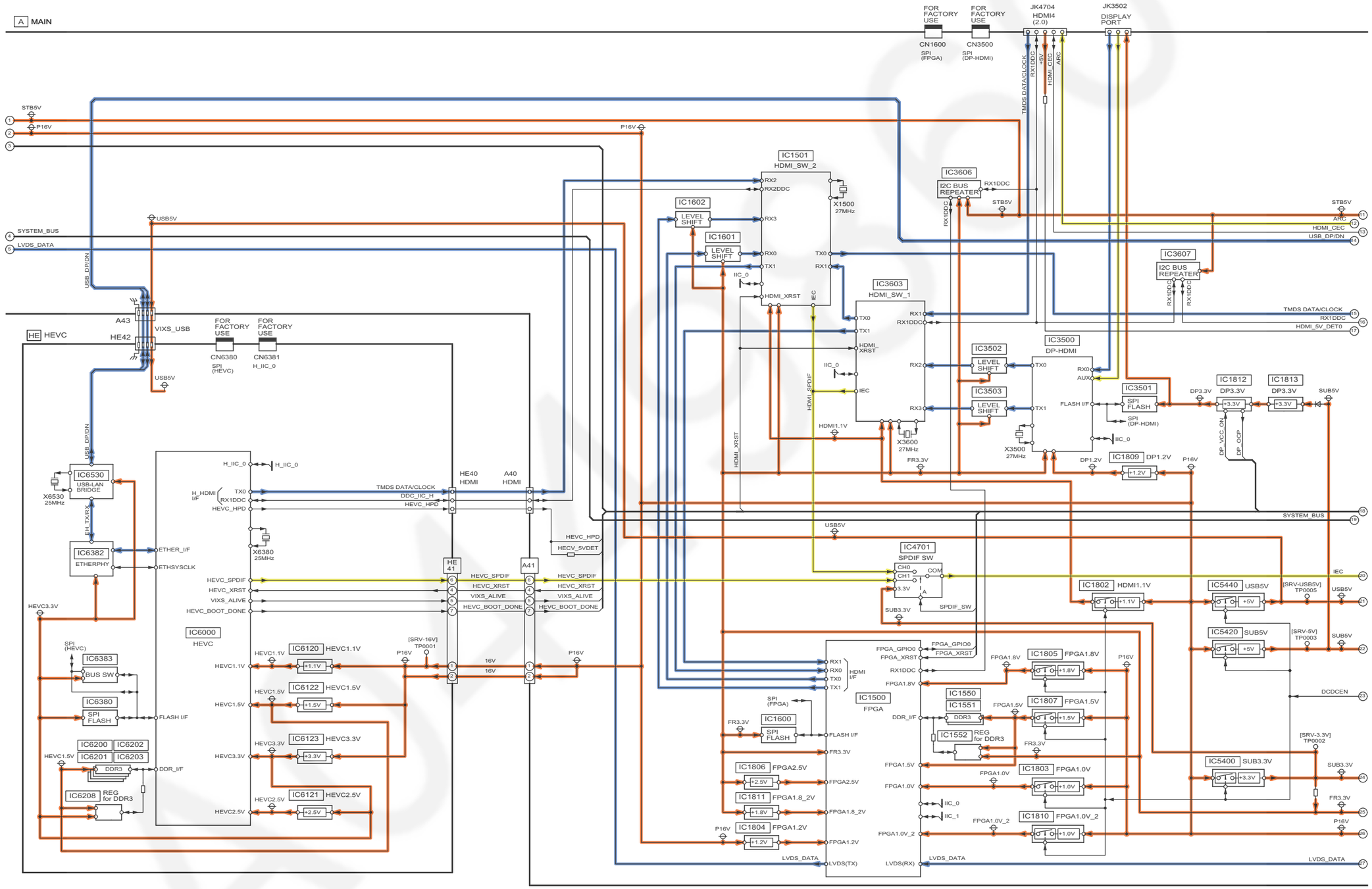

10.4. Block (3/3) Diagram

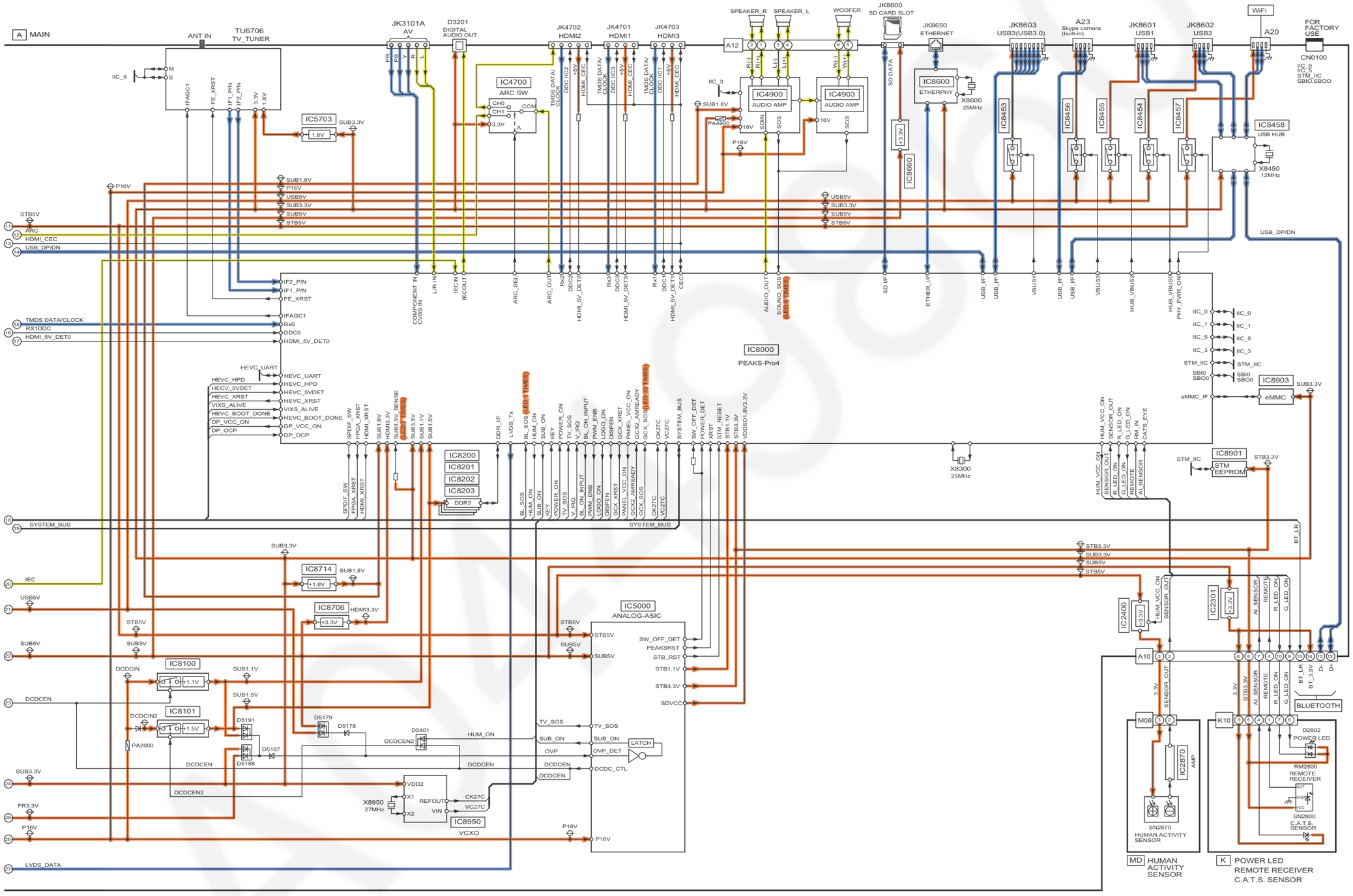

11 Wiring Connection Diagram

11.1. Caution statement.

Caution:

Please confirm that all flexible cables are assembled correctly.
Also make sure that they are locked in the connectors.
Verify by giving the flexible cables a very slight pull.

11.2. Wiring (1)

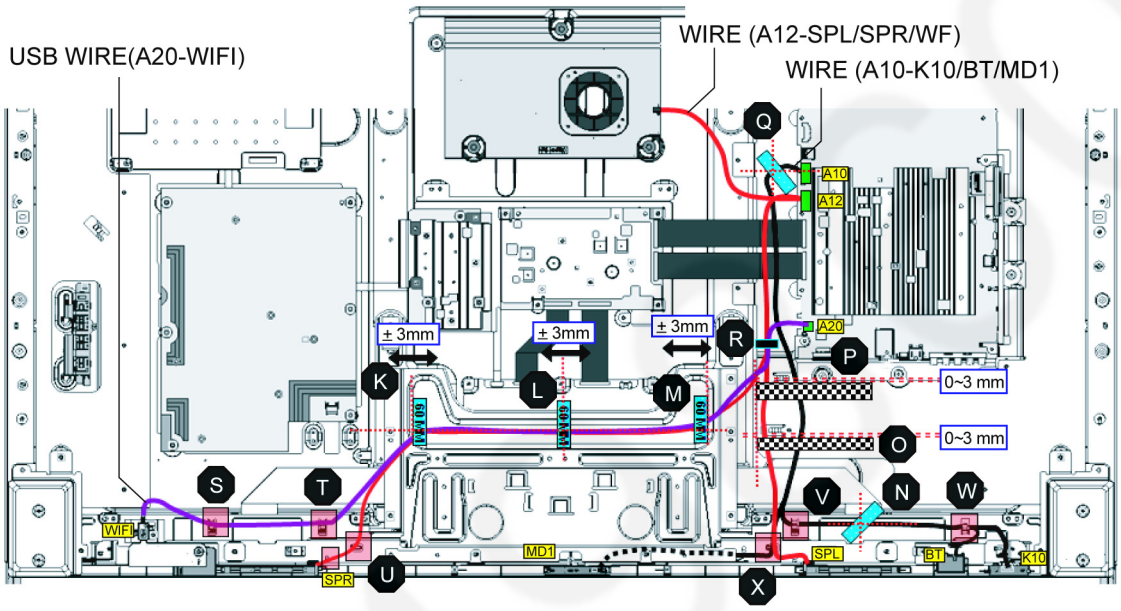

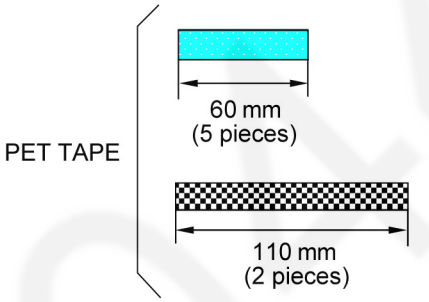

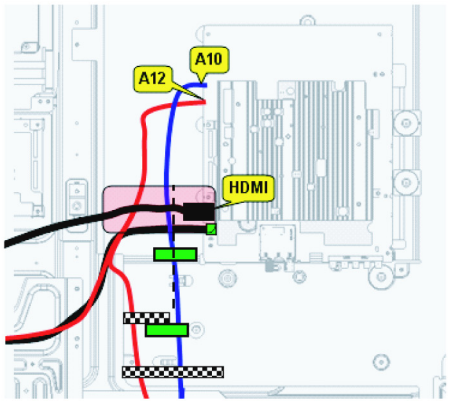

	TAPE							CLAMPER						
CABLES	K	L	M	N	O	P	Q	R	S	T	U	V	W	X
A10-K10/BT/MD1				●	●	●	●					●	●	●
A12-SPL/SPR/WF	●	●	●					●			●			●
A20-WIFI	●	●	●					●	●	●				

11.3. Wiring (2)

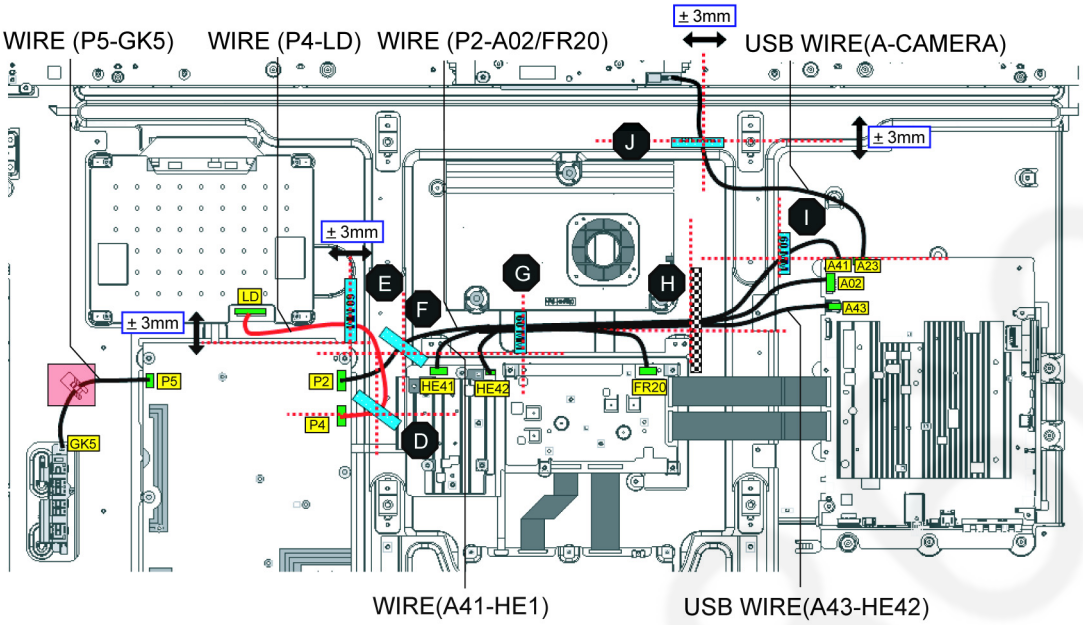

CABLES	TAPE						
	D	E	F	G	H	I	J
P5-GK5							
P4-LD	●	●					
P2-A02/FR20			●	●	●		
A41-HE41				●	●	●	
A23-CAMERA							●
A42-HE42				●	●		

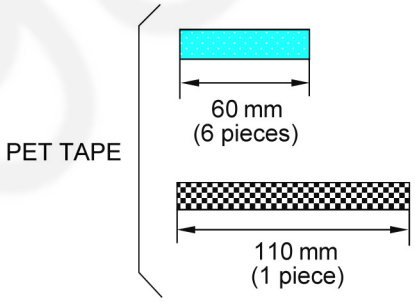

11.4. Wiring (3)

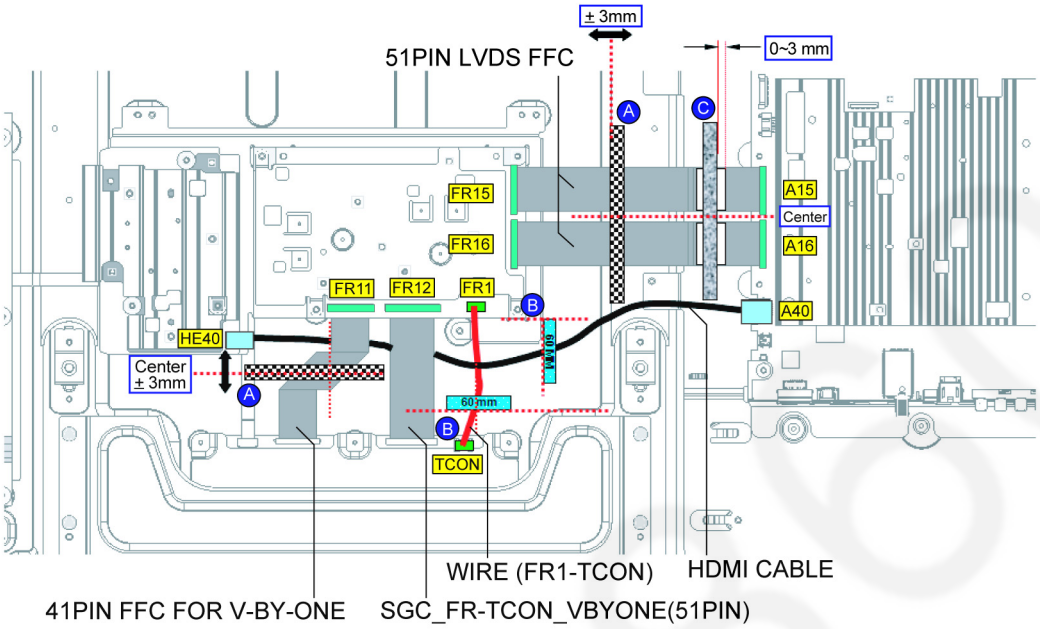
± 3mm
51PIN LVDS FFC
0~3 mm
A
C
FR15
FR16
FR11
FR12
FR1
B
A15
Center
A16
A40
HE40
Center
± 3mm
A
60 mm
B
TCON
WIRE (FR1-TCON)
HDMI CABLE
41PIN FFC FOR V-BY-ONE
SGC_FR-TCON_VBYONE(51PIN)

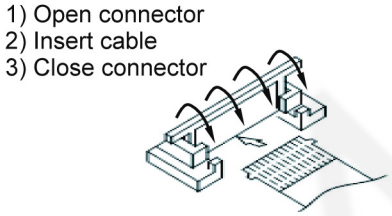
1) Open connector
2) Insert cable
3) Close connector

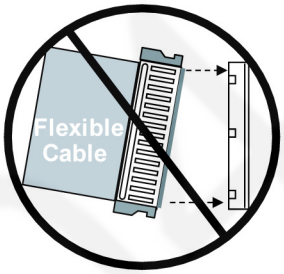
Flexible
Cable

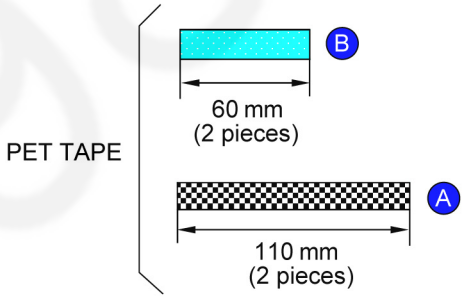
PET TAPE
B
60 mm
(2 pieces)
A
110 mm
(2 pieces)

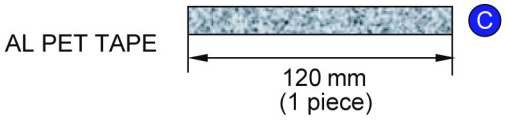
AL PET TAPE
C
120 mm
(1 piece)

11.5. Wiring (4)

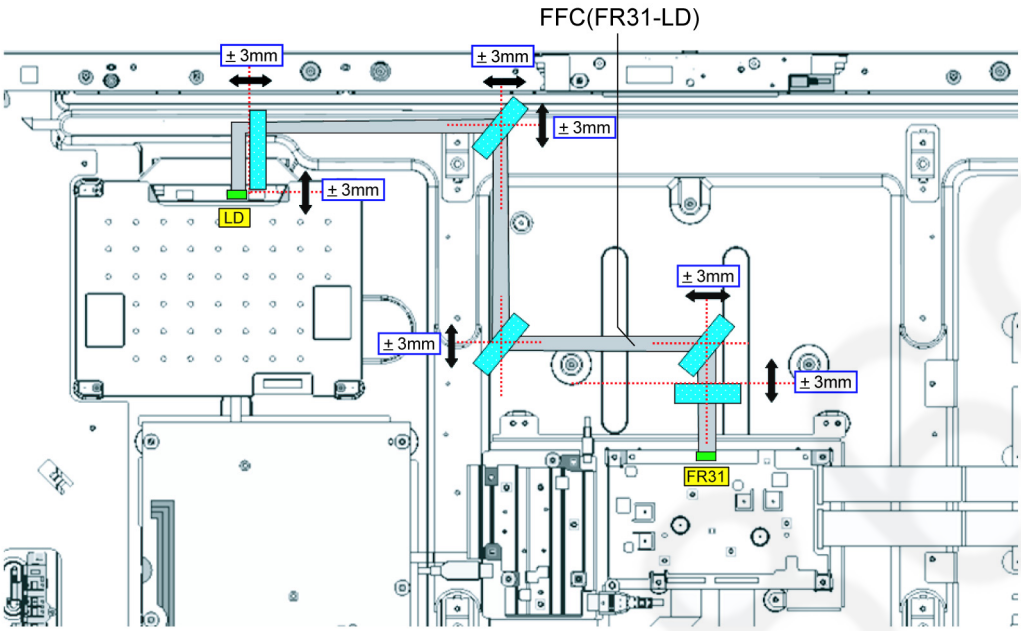

1) Open connector
2) Insert cable
3) Close connector

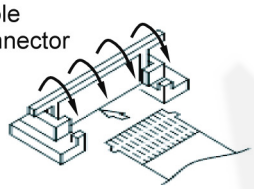

PET TAPE

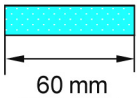

60 mm
(5 pieces)

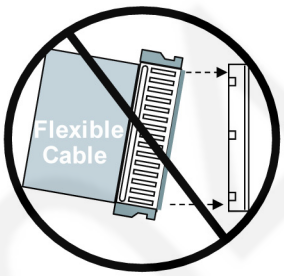
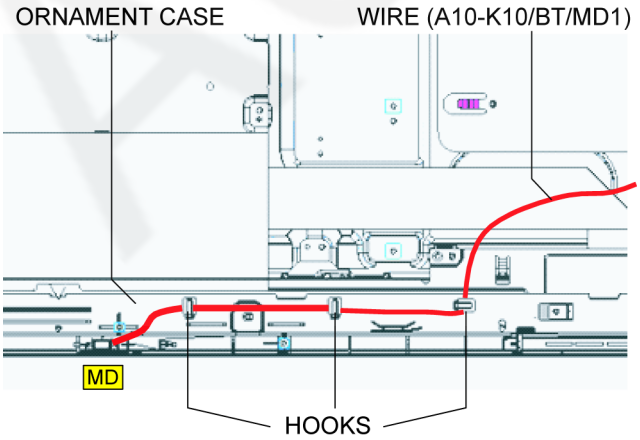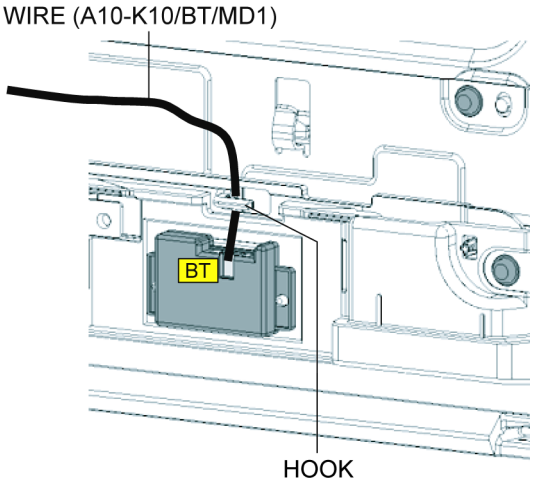
11.6. Wiring (5)