ORDER NO.CHM0604020CE

Service Manual

DVD Player

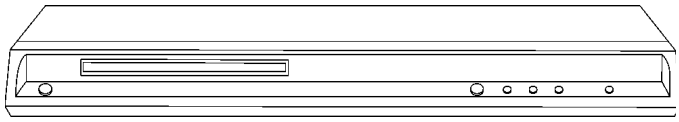

DVD-S52E
DVD-S52EB
DVD-S52EG

DL4.1 Mechanism Series

Color

(S).....Silver Type

(K).....Black Type(S52E/EG Only)

Specifications

Power supply: AC 230-240 V, 50 Hz (DVD-S52EB)
AC 230 V, 50 Hz (DVD-S52E/EG)

Power consumption: 14 W

Power consumption in standby mode: 1 W

Dimensions: 430 (W) × 251 (D) × 43 (H) mm

Mass: 2.2 kg (approx.)

Signal system: PAL 625/50, PAL 525/60, NTSC

Operating temperature range: + 5 to + 35 °C (+ 41 to + 95 °F)

Operating humidity range: 5 to 90 % RH (no condensation)

Discs played [8 cm (3") or 12 cm (5")]:

(1) DVD (DVD-Video, DVD-Audio, DivX[*6,7])

(2) DVD-RAM (DVD-VR, JPEG[*4,7], MPEG4[*5,7], DivX[*6,7], MP3[*2,7])

(3) DVD-R (DVD-Video, DVD-VR, JPEG[*4,7], MP3[*2,7], DivX[*6,7], MPEG4[*5,7])

(4) DVD-R DL (DVD-Video, DVD-VR)

(5) DVD-RW (DVD-Video, DVD-VR, JPEG[*4,7], MP3[*2,7], DivX[*6,7], MPEG4[*5,7])

(6) +R/+RW (Video)

(7) +R DL (Video)

(8) CD, CD-R / CD-RW (CD-DA, Video CD, SVCD[*1], MP3[*2,7], WMA[*3,7], JPEG[*4,7], MPEG4[*5,7], DivX[*6,7], HighMAT Level 2 (Audio and Image))

*1 Conforming to IEC62107

*2 MPEG-1 Layer 3, MPEG-2 Layer 3

*3 Windows Media Audio Ver.9.0 L3
Not compatible with Multiple Bit Rate (MBR)

*4 Exif Ver2.1 JPEG Baseline files
Picture resolution: between 160 × 120 and 6144 × 4096 pixels (Sub sampling is 4:0:0, 4:2:0, 4:2:2 or 4:4:4)
Extremely long and slender pictures may not be displayed

*5 MPEG4 data recorded with the Panasonic SD multi cameras or DVD video recorders conforming to SD VIDEO specifications (ASF standard) /MPEG4 (Simple Profile) video system/G.726 audio system

*6 Plays all versions of DivX® video (including DivX®6) with standard playback of DivX® media files. Certified to the DivX Home Theater Profile.
GMC (Global Motion Compensation) not supported.

*7 The total combined maximum number of recognizable audio, picture and video contents and groups: 4000 audio, picture and video contents and 400 groups.

Video output:

Output level:	1 Vp-p (75 Ω)
Output terminal:	Pin jack (1 system)/AV

S video output:

Y output level:	1 Vp-p (75 Ω)
C output level:	NTSC: 0.286 Vp-p (75 Ω)
	PAL: 0.300 Vp-p (75 Ω)
Output terminal:	S terminal (1 system)/AV

Component video output: [NTSC: 480p/480i, PAL: 576p/576i]

Y output level:	1 Vp-p (75 Ω)
P_B output level:	0.7 Vp-p (75 Ω)
P_R output level:	0.7 Vp-p (75 Ω)
Output terminal:	Pin jack (Y: green, P_B : blue, P_R : red) (1 system)

Panasonic®

© 2006 Matsushita Electric Industrial CO., Ltd. All rights reserved. Unauthorized copying and distribution is a violation of law.

RGB video output:

R output level:	0.7 Vp-p (75 Ω)
G output level:	0.7 Vp-p (75 Ω)
B output level:	0.7 Vp-p (75 Ω)
Output terminal:	AV

Video performance:

Horizontal resolution:	More than 500 lines
Video S/N ratio:	More than 65dB

Audio output:

Output level:	2 Vrms (1 kHz, 0 dB)
Output terminal:	Pin jack/AV
Number of terminals:	
2 channel:	1 system
5.1 channel discrete output (5.1 channel):	1 system

Audio performance:

(1) Frequency response:	
l DVD (linear audio):	4 Hz-22 kHz (48 kHz sampling)
	4 Hz-44 kHz (96 kHz sampling)
l DVD-Audio:	4 Hz-88 kHz (192 kHz sampling)
l CD Audio:	4 Hz-20 kHz
(2) S / N ratio:	
l CD Audio:	115 dB
(3) Dynamic range:	
l DVD (linear audio):	102 dB
l CD Audio:	98 dB
(4) Total harmonic distortion:	
l CD Audio:	0.0025 %

Digital audio output:

Optical digital output:	Optical terminal
Coaxial digital output:	Pin jack

HDMI AV output: 19pin

Pickup

Wave length:	662 nm / 785 nm
Laser power:	CLASS 2 / CLASS 3A

Note:

Specifications are subject to change without notice.

Mass and dimensions are approximate.

Solder:

This model uses lead free solder (PbF).

Manufactured under license from Dolby Laboratories. "Dolby" and the double-D symbol are trademarks of Dolby Laboratories.

"DTS" and "DTS 2.0 + Digital Out" are trademarks of Digital Theater Systems, Inc.

This product incorporates copyright protection technology that is protected by method claims of certain U.S. patents and other intellectual property rights owned by Macrovision Corporation and other rights owners. Use of this copyright protection technology must be authorized by Macrovision Corporation, and is intended for home and other limited viewing uses only unless otherwise authorized by Macrovision Corporation. Reverse engineering or disassembly is prohibited.

MPEG Layer-3 audio decoding technology licensed from Fraunhofer IIS and Thomson multimedia.

This product is licensed under the MPEG-4 Visual patent portfolio license for the personal and non-commercial use of a consumer for (i) encoding video in compliance with the MPEG-4 Visual Standard ("MPEG-4 Video") and/or (ii) decoding MPEG-4 Video that was encoded by a consumer engaged in a personal and non-commercial activity and/or was obtained from a video provider licensed by MPEG LA to provide MPEG-4 Video. No license is granted or shall be implied for any other use. Additional information including that relating to promotional, internal and commercial uses and licensing may be obtained from MPEG LA, LLC. See http://www.mpegla.com.

HighMAT™ and the HighMAT logo are either trademarks or registered trademarks of Microsoft Corporation in the United States and/or other countries.

Windows Media, and the Windows logo are trademarks, or registered trademarks of Microsoft Corporation in the United States and/or other countries.

WMA is a compression format developed by Microsoft Corporation. It achieves the same sound quality as MP3 with a file size that is smaller than that of MP3.

HDCD®, HDCD®, High Definition Compatible Digital® and Pacific Microsonics™ are either registered trademarks or trademarks of Pacific Microsonics, Inc. in the United States and/or other countries.

HDCD system manufactured under license from Pacific Microsonics, Inc. This product is covered by one or more of the following: In the USA : 5,479,168, 5,638,074, 5,640,161, 5,808,574, 5,838,274, 5,854,600, 5,864,311, 5,872,531, and in Australia: 669114, with other patents pending.

HDMI, the HDMI logo and High-Definition Multimedia Interface are trademarks or registered trademarks of HDMI Licensing LLC.

Official DivX® Certified product.
Plays all versions of DivX® video (including DivX®6) with standard playback of DivX® media files.
DivX, DivX Certified, and associated logos are trademarks of DivX, Inc. and are used under license.

⚠ WARNING

This service information is designed for experienced repair technicians only and is not designed for use by the general public.
It does not contain warnings or cautions to advise non-technical individuals of potential dangers in attempting to service a product.
Products powered by electricity should be serviced or repaired only by experienced professional technicians. Any attempt to service or repair the product or products dealt with in this service information by anyone else could result in serious injury or death.

CONTENTS

Page

1 IMPORTANT SERVICE INFORMATION ---- **4**
1.1. Notes ---- 4
1.2. About DivX ---- 4
1.3. Manual for Customer ---- 5
2 SAFETY PRECAUTIONS ---- **6**
2.1. GENERAL GUIDELINES ---- 6
3 PREVENTION OF ELECTRO STATIC DISCHARGE (ESD) TO ELECTROSTATICALLY SENSITIVE (ES) DEVICES ---- **6**
4 PRECAUTION OF LASER DIODE ---- **7**
5 SERVICE CAUTION BASED ON LEGAL RESTRICTIONS ---- **8**
5.1. General description about Lead Free Solder (PbF) ---- 8
6 PREVENTION OF STATIC ELECTRICITY DISCHARGE ---- **9**
6.1. Grounding for electrostatic breakdown prevention ---- 9
6.2. Handling Precautions for Traverse Unit (Optical Pickup) ---- 9
7 DISASSEMBLING THE CASING AND CHECKING P.C.B.S ---- **10**
7.1. Disassembly Procedure ---- 10
7.2. Casing Parts and P.C.B. Positions ---- 10
7.3. Top Panel ---- 11
7.4. Front Panel ---- 11
7.5. Operation P.C.B. and Power SW P.C.B. ---- 11

7.6. Rear Panel 11
7.7. Module P.C.B. 11
7.8. Mechanism Unit 12
7.9. 5.1CH P.C.B. and Mother P.C.B. 12
7.10. Service Position 13
8 ASSEMBLING AND DISASSEMBLING THE MECHANISM UNIT 15
8.1. Disassembly Procedure 15
8.2. Traverse Unit 15
8.3. Tray 16
8.4. Loading section 17
8.5. Loading motor P.C.B. 18
8.6. Optical Pickup Unit 19
8.7. Traverse Motor 21
9 SELF-DIAGNOSIS FUNCTION AND SERVICE MODES 23
9.1. Optical Pickup Breakdown Diagnosis 23
9.2. Service Mode Table 1 24
9.3. DVD Self Diagnostic Function-Error Code 24
9.4. Last Error Code saved during NO PLAY 26
9.5. Service mode table 2 27
9.6. Sales demonstration lock function 30
9.7. Handling After Completing Repairs 30
10 SERVICE PRECAUTIONS 31
10.1. Recovery after the dvd player is repaired 31
10.2. Firmware version-up of the DVD player 31
11 ADJUSTMENT PROCEDURES 32
11.1. Service Tools and Equipment 32
11.2. Important points in adjustment 32
11.3. Storing and Handling Test Discs 32
11.4. Optical adjustment 33
12 ABBREVIATIONS 35
13 VOLTAGE CHART 37
13.1. MOTHER P.C.B. 37
13.2. MODULE P.C.B. 38
14 BLOCK DIAGRAM 41
14.1. OVERALL BLOCK DIAGRAM 41
14.2. POWER SUPPLY BLOCK DIAGRAM 42
14.3. SERVO BLOCK DIAGRAM 43
14.4. VIDEO BLOCK DIAGRAM 44
14.5. AUDIO BLOCK DIAGRAM 46
15 INTERCONNECTION SCHEMATIC DIAGRAM & SCHEMATIC DIAGRAM NOTES 47
15.1. INTERCONNECTION SCHEMATIC DIAGRAM 47
15.2. SCHEMATIC DIAGRAM NOTES 48
16 SCHEMATIC DIAGRAM 49
16.1. POWER SUPPLY SECTION (MOTHER P.C.B. (1 / 2)) SCHEMATIC DIAGRAM 49
16.2. FRONT & AV OUT SECTION (MOTHER P.C.B. (2 / 2)) SCHEMATIC DIAGRAM 50
16.3. MODULE SCHEMATIC DIAGRAM 53
16.4. HDMI SCHEMATIC DIAGRAM 56
16.5. 5.1CH SCHEMATIC DIAGRAM 57
17 PRINT CIRCUIT BOARD 59
17.1. MOTHER P.C.B. 59
17.2. MOTHER P.C.B. ADDRESS INFORMATION 60
17.3. MODULE P.C.B. (1/2) 61
17.4. MODULE P.C.B. (2/2) 62
17.5. MODULE P.C.B. ADDRESS INFORMATION 63
18 EXPLODED VIEWS 65
18.1. CASING PARTS & MECHANISM SECTION EXPLODED VIEW 65
18.2. MECHANISM SECTION EXPLODED VIEW 66
18.3. PACKING & ACCESSORIES SECTION EXPLODED VIEW 67
19 REPLACEMENT PARTS LIST 68

1 IMPORTANT SERVICE INFORMATION

1.1. Notes

When you replace EEPROM or exchange MODULE P.C.B., you have to take "Manual for customer" to the customer with unit. (also in the case of unit exchange)

Please take and use "Manual for customer" from below.

1. Come with MODULE P.C.B. or EEPROM (Service part).
2. Make a photocopy section 1.3. "Manual for customer" on this service manual.

"Manual for customer" has important information for "DivX Video-on-Demand Service" user.
Please don´t forget take it to the customer with unit!

1.2. About DivX

1.2.1. DivX

A video compression format developed by DivXNetworks, Inc. that compresses video files without any considerable loss of video quality.

1.2.2. About DivX Video-on-Demand Content

DivX Video-on-Demand (VOD) content is encrypted for copyright protection. In order to play DivX VOD content on this unit, you first need to register the unit.

Follow the on line instructions for purchasing DivX VOD content to enter the unit's registration code and register the unit. For more information about DivX VOD, visit www.divx.com/vod.

Display the unit's registration code

8 alphanumeric characters

- We recommend that you make a note of this code for future reference.
- After playing DivX VOD content for the first time, another registration code is then displayed in "DivX Registration". Do not use this registration code to purchase DivX VOD content. If you use this code to purchase DivX VOD content, and then play the content on this unit, you will no longer be able to play any content that you purchased using the previous code.
- If you purchase DivX VOD content using a registration code different from this unit's code, you will not be able to play this content. ("Authorization Error" is displayed.)

Regarding DivX content that can only be played a set number of times

Some DivX VOD content can only be played a set number of times. When you play this content, the remaining number of plays is displayed. You cannot play this content when the number of remaining plays is zero. ("Rental Expired" is displayed.)

When playing this content

- The number of remaining plays is reduced by one if
  –you press [⏻] or [SETUP].
  –you press [■] (STOP). [Press [❚❚] (PAUSE) to stop play.]
  –you press [|◀◀ ▶▶|] (SKIP) or [◀◀ ▶▶] (SEARCH) etc. and arrive at another content or the start of the content being played.

Resume (Stop) and Marker (Play Menu) functions do not work.

1.3. Manual for Customer

Warning for Customers Who Use the DivX Video-on-Demand content.

1. The registration code has been changed for the repair of the product or the product exchange.

2. Obtain and register a new registration code, otherwise you will no longer be able to play DivX Video-on-Demand content.

3. Follow the procedure on the DivX Video-on-Demand web site to register at http://vod.divx.com/.

* If you do not use the DivX Video-on-Demand content, please ignore this warning.

2 SAFETY PRECAUTIONS

2.1. GENERAL GUIDELINES

1. When servicing, observe the original lead dress. If a short circuit is found, replace all parts which have been overheated or damaged by the short circuit.
2. After servicing, see to it that all the protective devices such as insulation barriers, insulation papers shields are properly installed.
3. After servicing, make the following leakage current checks to prevent the customer from being exposed to shock hazards.

2.1.1. LEAKAGE CURRENT COLD CHECK

1. Unplug the AC cord and connect a jumper between the two prongs on the plug.
2. Measure the resistance value, with an ohmmeter, between the jumpered AC plug and each exposed metallic cabinet part on the equipment such as screwheads, connectors, control shafts, etc. When the exposed metallic part has a return path to thechassis, the reading should be between 1MΩ and 5.2MΩ.
   When the exposed metal does not have a return path to the chassis, the reading must be ∞ .

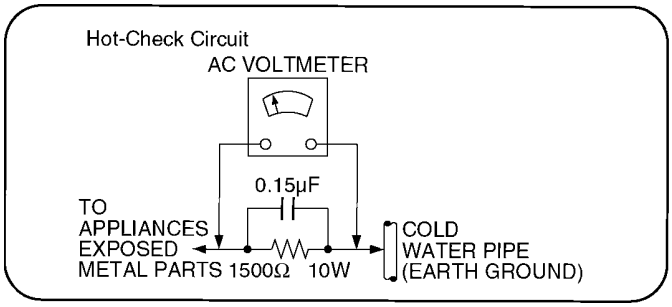

Figure 1

2.1.2. LEAKAGE CURRENT HOT CHECK (See Figure 1 .)

1. Plug the AC cord directly into the AC outlet. Do not use an isolation transformer for this check.
2. Connect a 1.5kΩ, 10 watts resistor, in parallel with a 0.15μF capacitors, between each exposed metallic part on the set and a good earth ground such as a water pipe, as shown in Figure 1.
3. Use an AC voltmeter, with 1000 ohms/volt or more sensitivity, to measure the potential across the resistor.
4. Check each exposed metallic part, and measure the voltage at each point.
5. Reverse the AC plug in the AC outlet and repeat each of the above measurements.
6. The potential at any point should not exceed 0.75 volts RMS. A leakage current tester (Simpson Model 229 or equivalent) may be used to make the hot checks, leakage current must not exceed 1/2 milliamp. In case a measurement is outside of the limits specified, there is a possibility of a shock hazard, and the equipment should be repaired and rechecked before it is returned to the customer.

3 PREVENTION OF ELECTRO STATIC DISCHARGE (ESD) TO ELECTROSTATICALLY SENSITIVE (ES) DEVICES

Some semiconductor (solid state) devices can be damaged easily by static electricity. Such components commonly are called Electrostatically Sensitive (ES) Devices. Examples of typical ES devices are integrated circuits and some field-effect transistorsand semiconductor "chip" components. The following techniques should be used to help reduce the incidence of component damage caused by electro static discharge (ESD).

1. Immediately before handling any semiconductor component or semiconductor-equipped assembly, drain off any ESD on your body by touching a known earth ground. Alternatively, obtain and wear a commercially available discharging ESD wrist strap, which should be removed for potential shock reasons prior to applying power to the unit under test.
2. After removing an electrical assembly equipped with ES devices, place the assembly on a conductive surface such as alminum foil, to prevent electrostatic charge buildup or exposure of the assembly.
3. Use only a grounded-tip soldering iron to solder or unsolder ES devices.
4. Use only an anti-static solder removal device. Some solder removal devices not classified as "anti-static (ESD protected)" can generate electrical charge sufficient to damage ES devices.
5. Do not use freon-propelled chemicals. These can generate electrical charges sufficient to damage ES devices.
6. Do not remove a replacement ES device from its protective package until immediately before you are ready to install it. (Most replacement ES devices are packaged with leads electrically shorted together by conductive foam, alminum foil or comparableconductive material).
7. Immediately before removing the protective material from the leads of a replacement ES device, touch the protective material to the chassis or circuit assembly into which the device will be installed.

Caution

Be sure no power is applied to the chassis or circuit, and observe all other safety precautions.

8. Minimize bodily motions when handling unpackaged replacement ES devices. (Otherwise hamless motion such as the brushing together of your clothes fabric or the lifting of your foot from a carpeted floor can generate static electricity (ESD) sufficient todamage an ES device).

4 PRECAUTION OF LASER DIODE

CAUTION:

This product utilizes a laser diode with the unit turned “on”, invisible laser radiation is emitted from the pickup lens.
Wave length: 662 nm/785 nm
Maximum output radiation power from pickup: 100 μ W/VDE
Laser radiation from the pickup lens is safety level,but be sure the followings:

1. Do not disassemble the optical pickup unit, since radiation from exposed laser diode is dangerous.
2. Do not adjust the variable resistor on the pickup unit. It was already adjusted.
3. Do not look at the focus lens using optical instruments.
4. Recommend not to look at pickup lens for a long time.

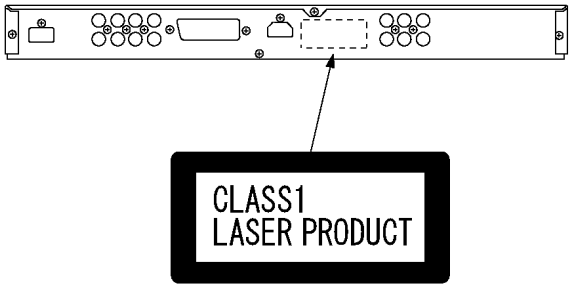

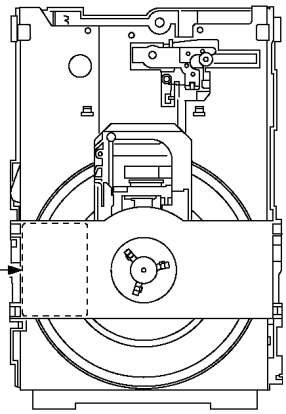

CAUTION!
THIS PRODUCT UTILIZES A LASER.
USE OF CONTROLS OR ADJUSTMENTS OR PERFORMANCE OF PROCEDURES OTHER THAN THOSE SPECIFIED HEREIN MAY RESULT IN HAZARDOUS RADIATION EXPOSURE.

5 SERVICE CAUTION BASED ON LEGAL RESTRICTIONS

5.1. General description about Lead Free Solder (PbF)

The lead free solder has been used in the mounting process of all electrical components on the printed circuit boards used for this equipment in considering the globally environmental conservation.

The normal solder is the alloy of tin (Sn) and lead (Pb). On the other hand, the lead free solder is the alloy mainly consists of tin (Sn), silver (Ag) and Copper (Cu), and the melting point of the lead free solder is higher approx.30°C (86°F) more than that of the normal solder.

Definition of PCB Lead Free Solder being used

The letter of "PbF" is printed either foil side or components side on the PCB using the lead free solder. (See right figure)	PbF

Service caution for repair work using Lead Free Solder (PbF)

- The lead free solder has to be used when repairing the equipment for which the lead free solder is used. (Definition: The letter of “PbF” is printed on the PCB using the lead free solder.)
- To put lead free solder, it should be well molten and mixed with the original lead free solder.
- Remove the remaining lead free solder on the PCB cleanly for soldering of the new IC.
- Since the melting point of the lead free solder is higher than that of the normal lead solder, it takes the longer time to melt the lead free solder.
- Use the soldering iron (more than 70W) equipped with the temperature control after setting the temperature at 350±30°C (662±86°F).

Recommended Lead Free Solder (Service Parts Route.)

The following 3 types of lead free solder are available through the service parts route.

- RFKZ03D01K----------(0.3mm 100g Reel)
- RFKZ06D01K----------(0.6mm 100g Reel)
- RFKZ10D01K----------(1.0mm 100g Reel)

Note

* Ingredient: tin (Sn) 96.5%, silver (Ag) 3.0%, Copper (Cu) 0.5%, Cobalt (Co) / Germanium (Ge) 0.1 to 0.3%

6 PREVENTION OF STATIC ELECTRICITY DISCHARGE

The laser diode in the traverse unit (optical pickup) may brake down due to static electricity of clothes or human body. Use due caution to electrostatic breakdown when servicing and handling the laser diode.

6.1. Grounding for electrostatic breakdown prevention

Some devices such as the DVD player use the optical pickup (laser diode) and the optical pickup will be damaged by static electricity in the working environment. Proceed servicing works under the working environment where grounding works is completed.

6.1.1. Worktable grounding

1. Put a conductive material (sheet) or iron sheet on the area where the optical pickup is placed, and ground the sheet.

6.1.2. Human body grounding

1. Use the anti-static wrist strap to discharge the static electricity form your body.

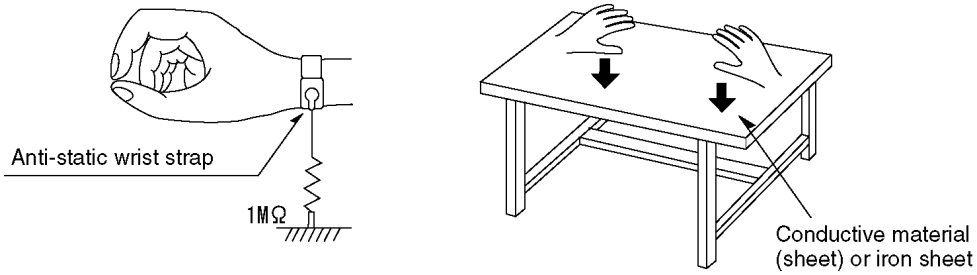

6.1.3. Handling of optical pickup

1. To keep the good quality of the optical pickup maintenance parts during transportation and before installation, the both ends of the laser diode are short-circuited. After replacing the parts with new ones, remove the short circuit accordingto the correct procedure. (See this Technical Guide.)
2. Do not use a tester to check the laser diode for the optical pickup. Failure to do so will damage the laser diode due to the power supply in the tester.

6.2. Handling Precautions for Traverse Unit (Optical Pickup)

1. Do not give a considerable shock to the traverse unit (optical pickup) as it has an extremely high-precise structure.
2. When replacing the optical pickup, install the flexible cable and cut its short land with a nipper. See the optical pickup replacement procedure in this Technical Guide. Before replacing the traverse unit, remove the short pin for preventing static electricity and install a new unit. Connect the connector as short times as possible.
3. The flexible cable may be cut off if an excessive force is applied to it. Use caution when handling the cable.
4. The half-fixed resistor for laser power adjustment cannot be adjusted. Do not turn the resistor.

7 DISASSEMBLING THE CASING AND CHECKING P.C.B.S

7.1. Disassembly Procedure

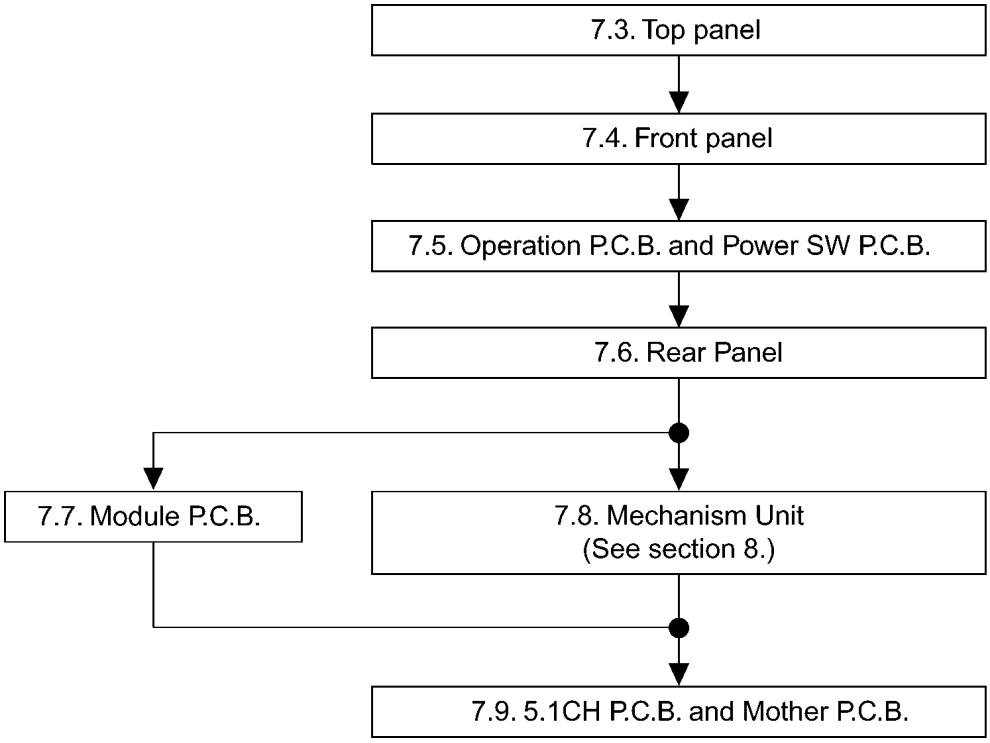

7.2. Casing Parts and P.C.B. Positions

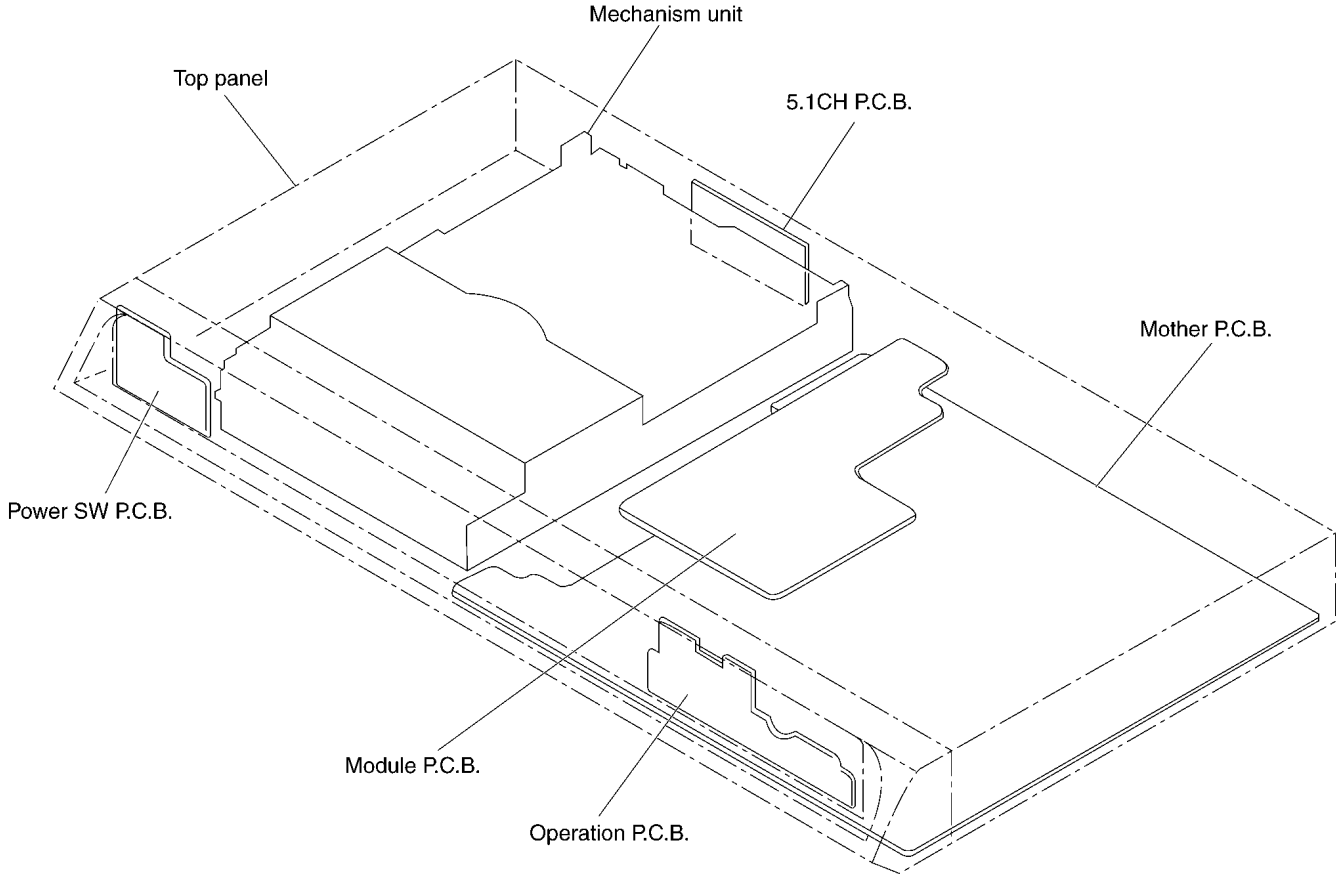

7.3. Top Panel

1. Unscrew the screws.

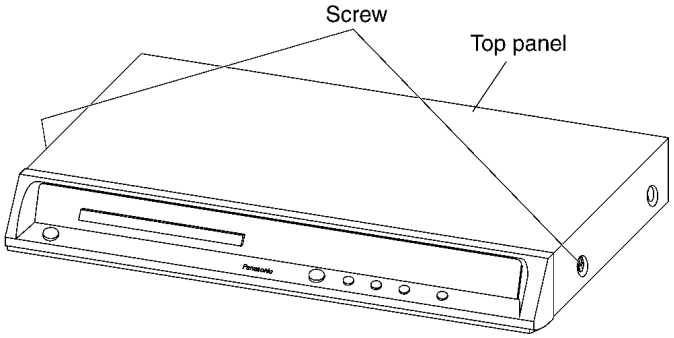

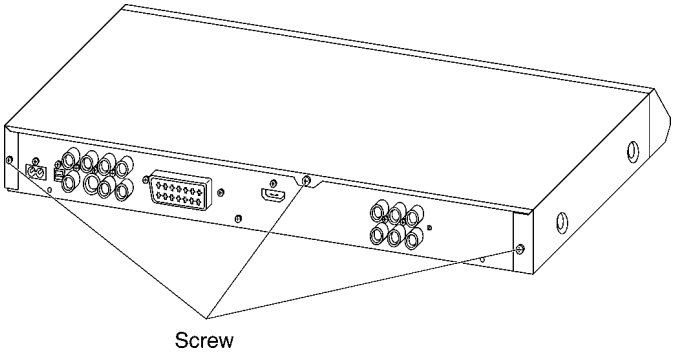

7.4. Front Panel

1. Release the tabs and connector.

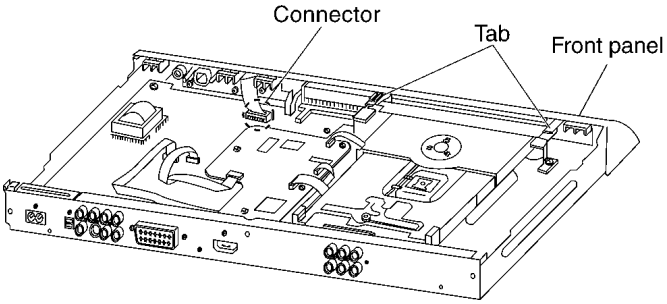

2. Release the tabs.

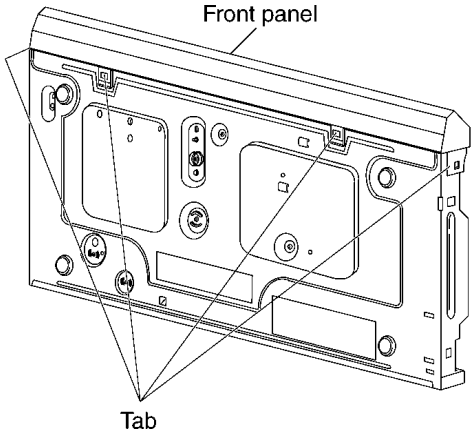

7.5. Operation P.C.B. and Power SW P.C.B.

1. Unscrew the screws.

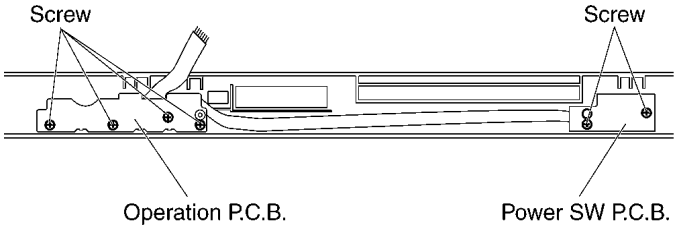

7.6. Rear Panel

1. Unscrew the screws.
2. Release the tabs.

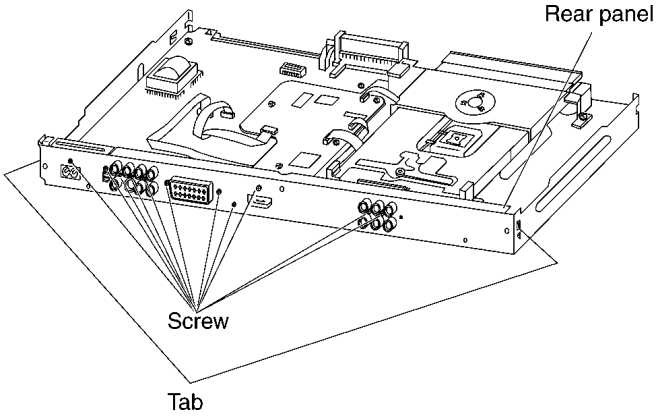

7.7. Module P.C.B.

1. Remove the connectors.
2. Unscrew the screws.
3. Press each tab with the nipper to module P.C.B. vertically.

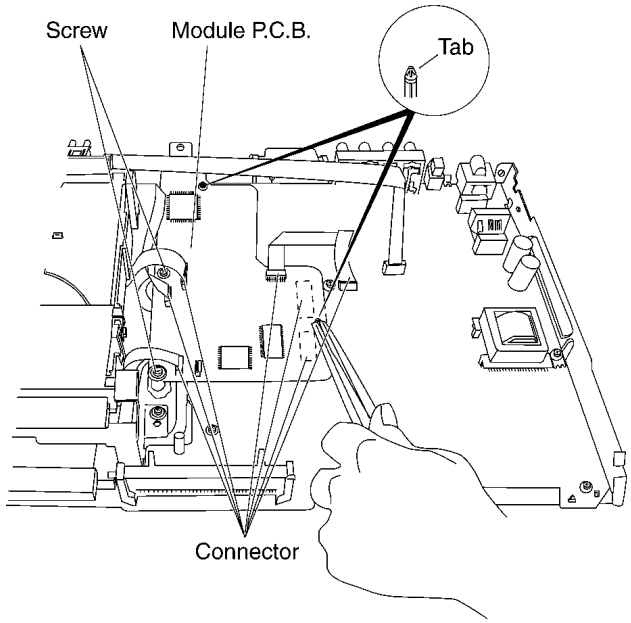

7.8. Mechanism Unit

1. Unscrew the screws.

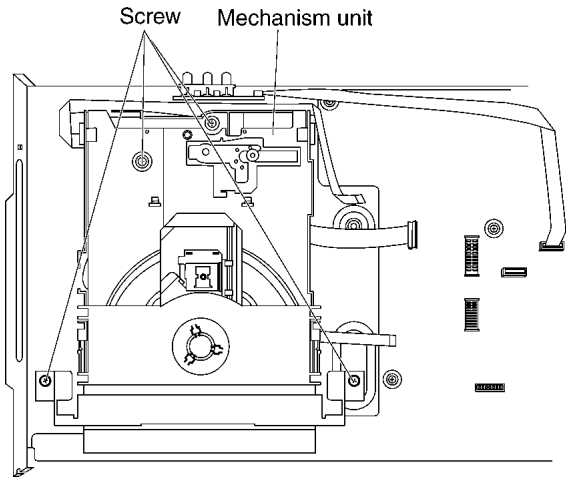

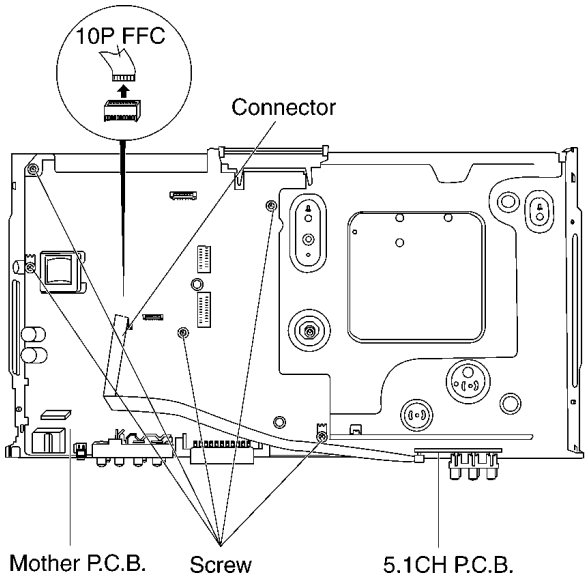

2. Release the tabs.

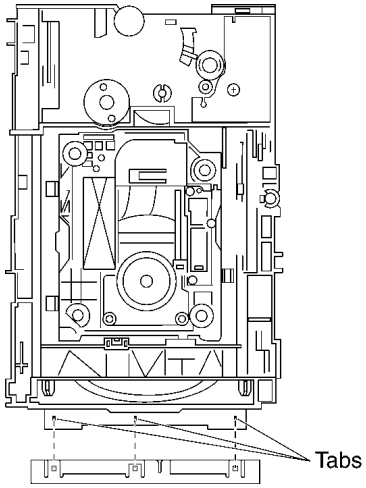

7.9. 5.1CH P.C.B. and Mother P.C.B.

1. Remove the connector.
2. Unscrew the screws.

7.10. Service Position

Caution:

Put an insulation material between Module P.C.B. and Mother P.C.B..

7.10.1. Servicing position of the Module P.C.B.

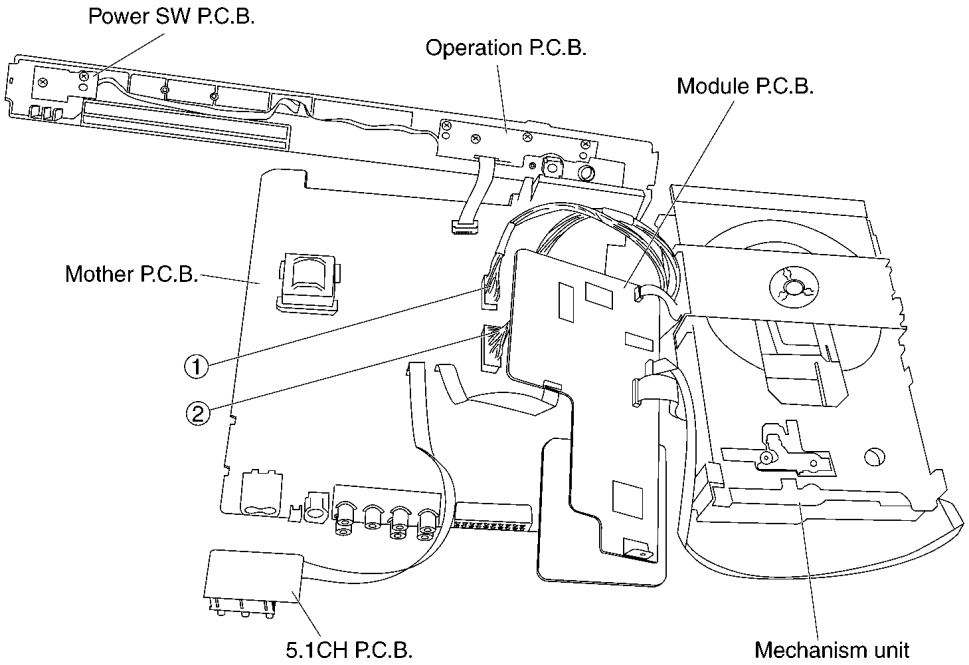

7.10.2. Servicing position of the Mother P.C.B.

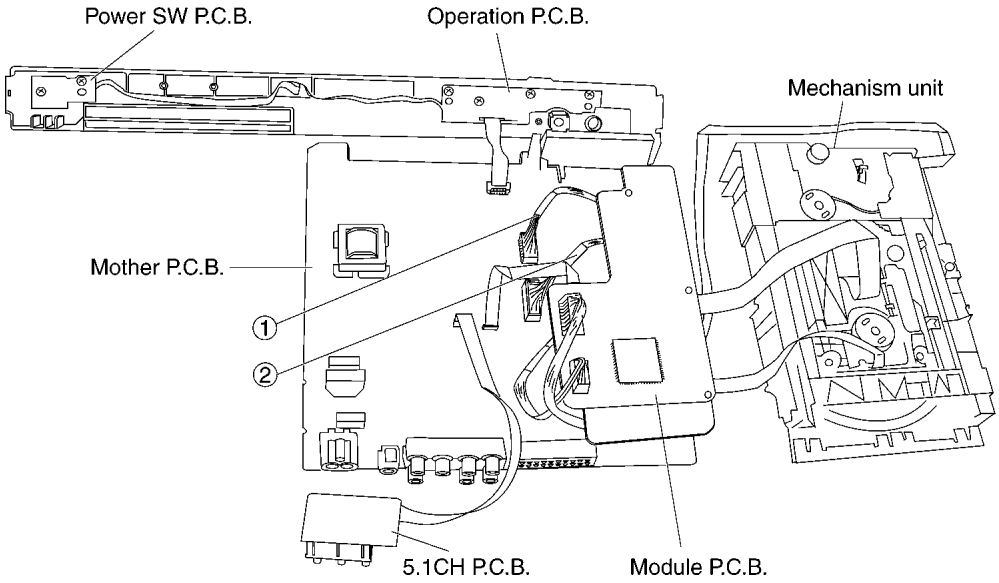

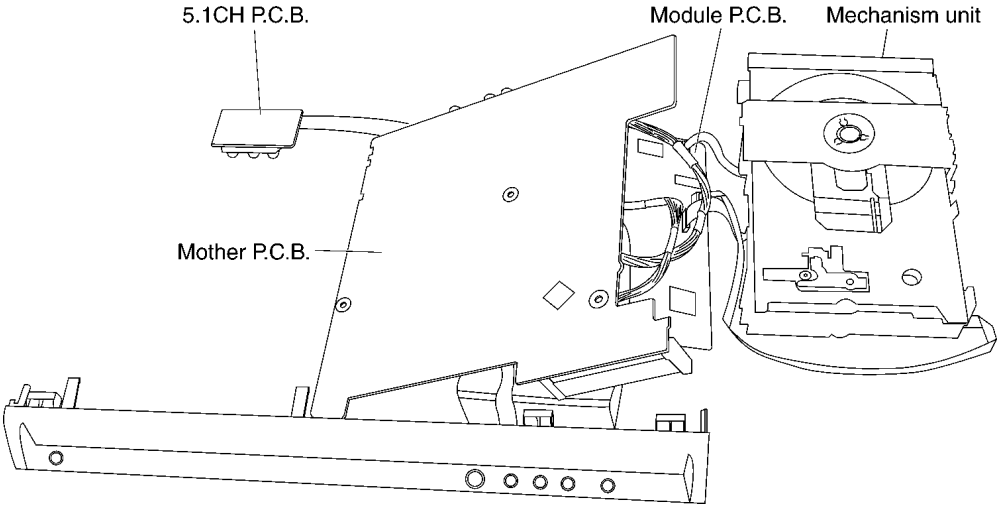

7.10.3. List of the Extension Cables

①	VUC8026	14pins	PS8101(Module P.C.B.) — FP3501(Mother P.C.B.)
②	RFKZ0106	20pins	PS8301(Module P.C.B.) — FP3502(Mother P.C.B.)

8 ASSEMBLING AND DISASSEMBLING THE MECHANISM UNIT

8.1. Disassembly Procedure

Disassembling the exterior part (See section 7.)

↓

8.2. Traverse Unit

↓

8.3. Tray

↓

8.4. Loading section

↓

8.5. Loading motor P.C.B.

↓

8.6. Optical Pickup Unit

↓

8.7. Traverse Motor

8.2. Traverse Unit

1. Slide the lever (A) in the arrow direction (to the opposite side) till it stops.
2. Slide the lever (A) further by bending the tab at the right side of the lever (A) in the right direction. (The right groove opens and the boss becomes seen.)
3. Open the lever (B) to left. (The 2 grooves at the left side open.)

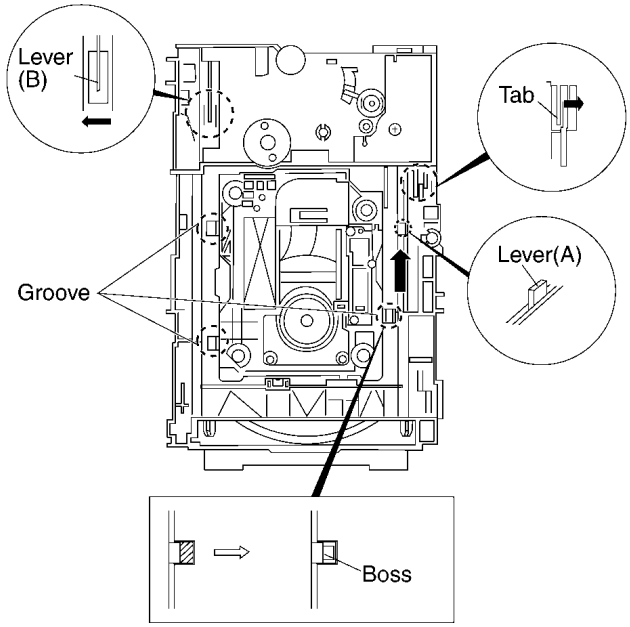

4. Remove the traverse unit.

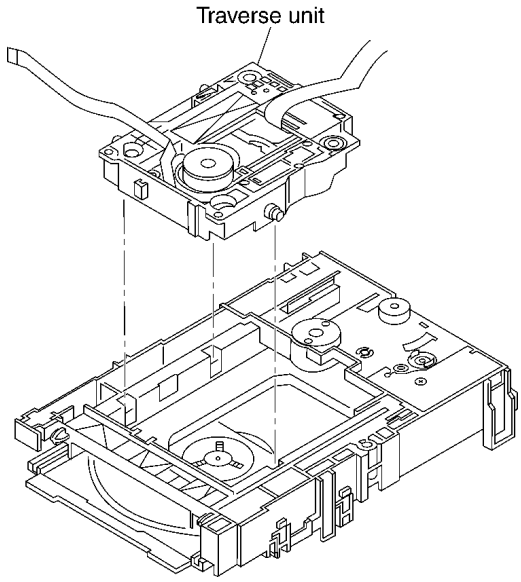

8.3. Tray

1. Slide the guide tray unit while pressing the stopper in the arrow direction, and remove the guide tray unit.

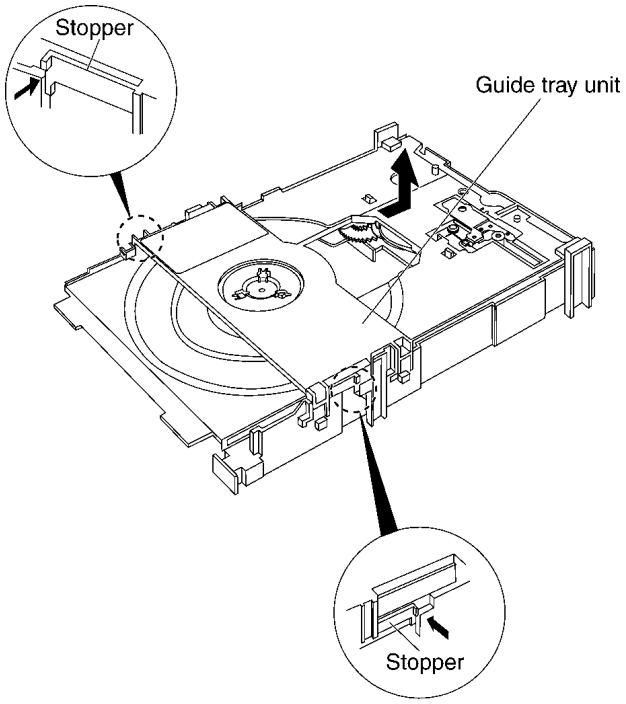

2. Raise the loading unit.
3. Slide the lever in the arrow direction till it stops and pull the tray out.

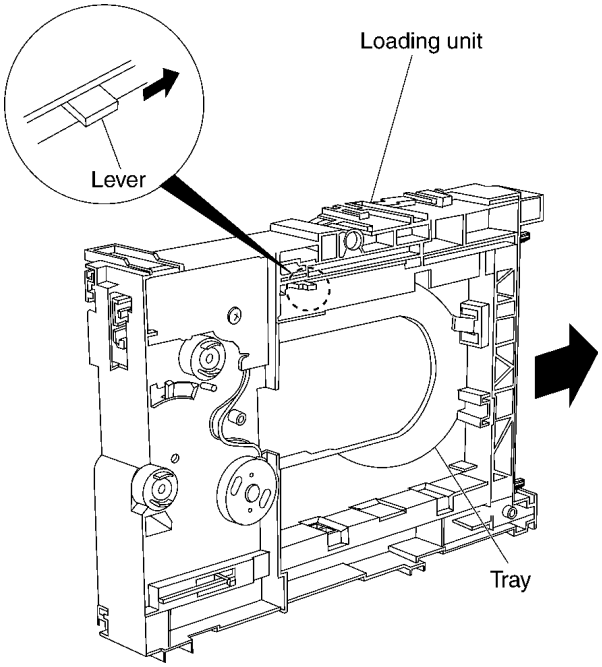

4. Spread the tabs at the both sides and pull the tray out. (The tray slides a little forward and stops.)

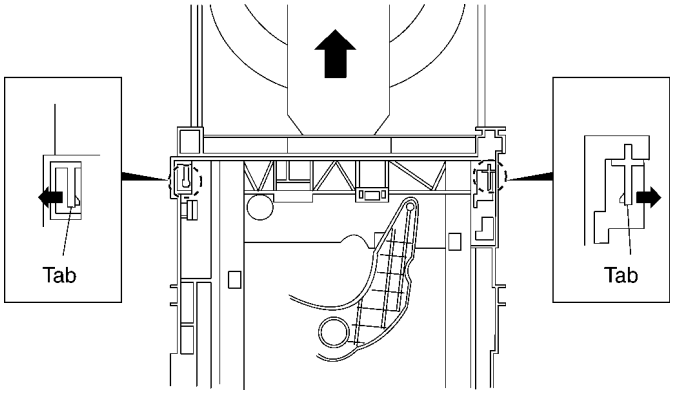

5. Remove the drive arm concave phase from the tray slider and tray.

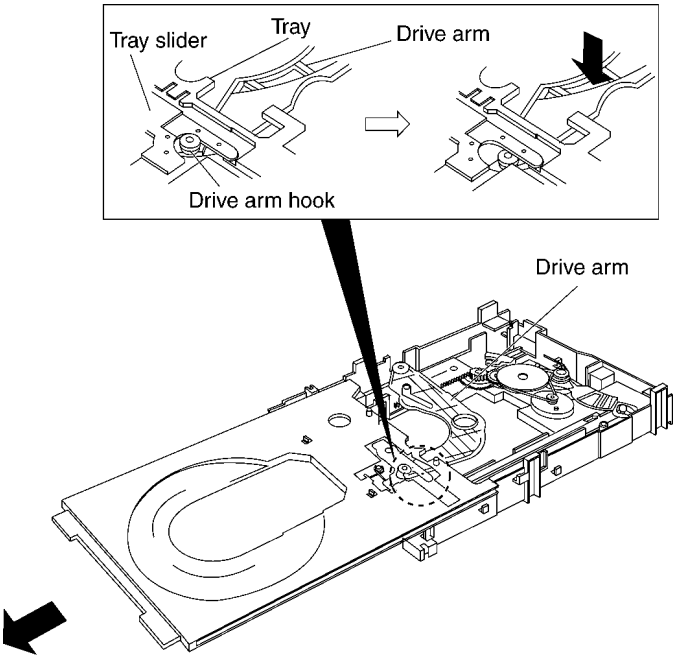

<Assembling the tray unit>

1. Insert a part of the tray into the unit sliding over the groove on the mechanical chassis unit.
2. Insert the tray to the point before the tab of the mechanical chassis unit.

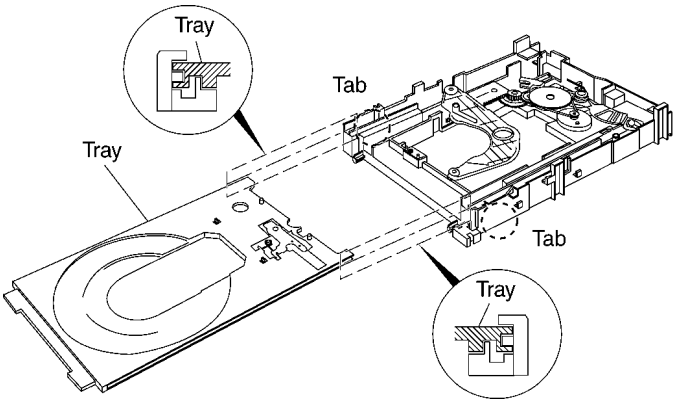

3. Hook the drive arm concave phase over the tray and the tray slider.
4. Press in the tray.

5. Make sure that the tray and the drive arm move smoothly.

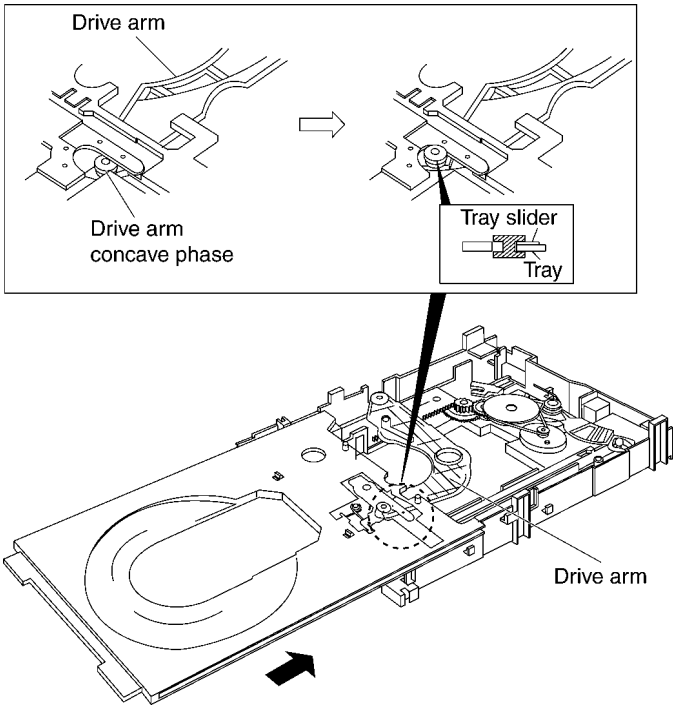

8.4. Loading section

1. Spread the tabs at the both sides and push out the drive arm shaft.

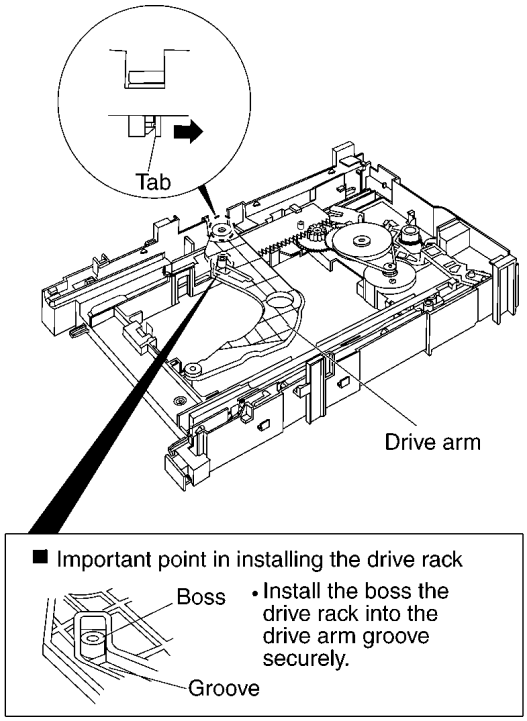

2. Hook the lock lever spring on the lock lever projection part temporarily.
3. Unlock the tab and remove the lock lever.

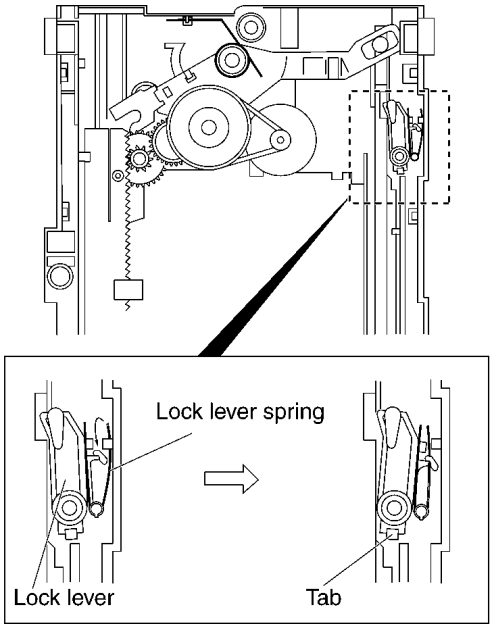

4. Remove the belt.
5. Unlock the tab and remove the pulley.
6. Remove the relay gear.

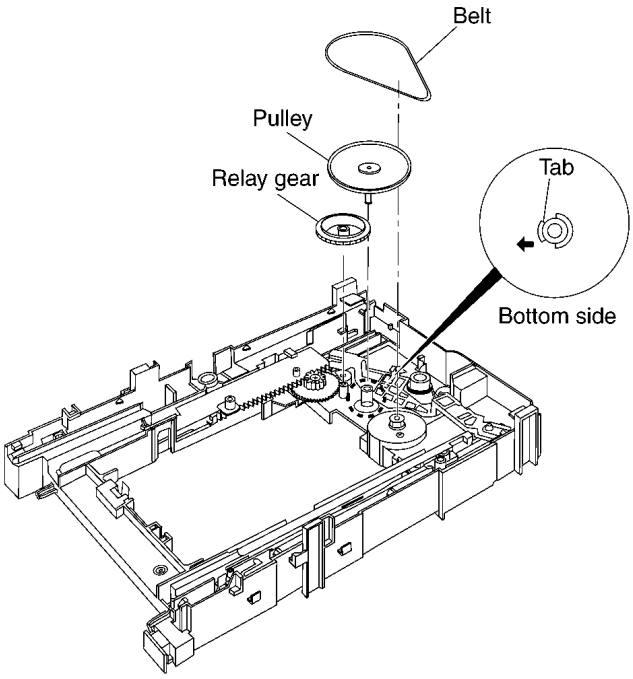

7. Turn the change lever in the arrow direction till it stops.
8. Hook the change lever spring on the change lever project part temporarily.

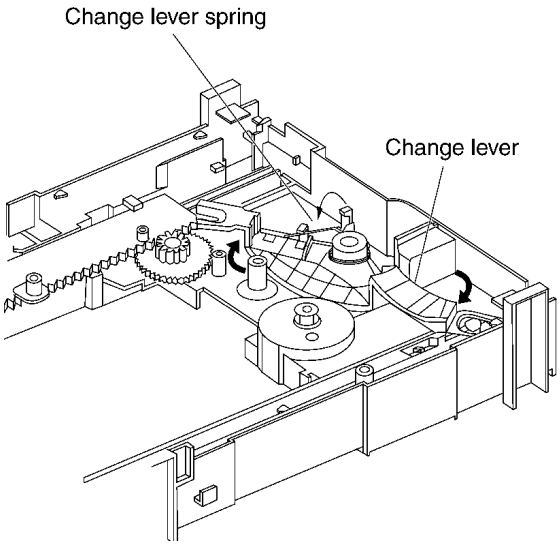

9. Pull the lever (B) in the bottom side to your side and remove the change lever.

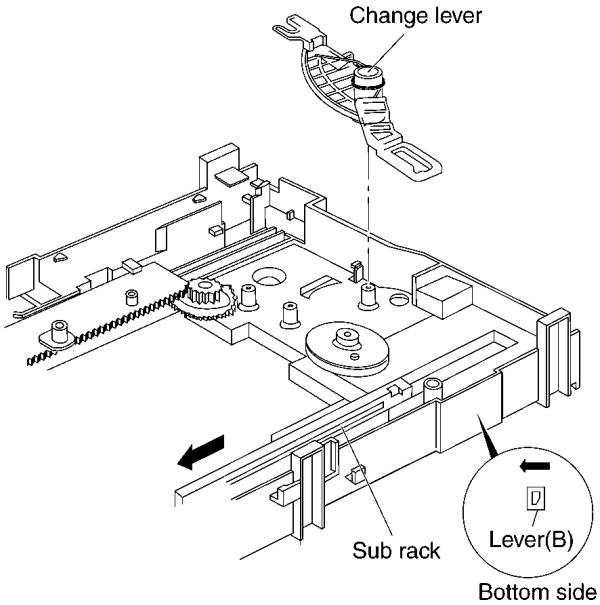

10. Remove the drive rack, the sub rack and the drive gear.

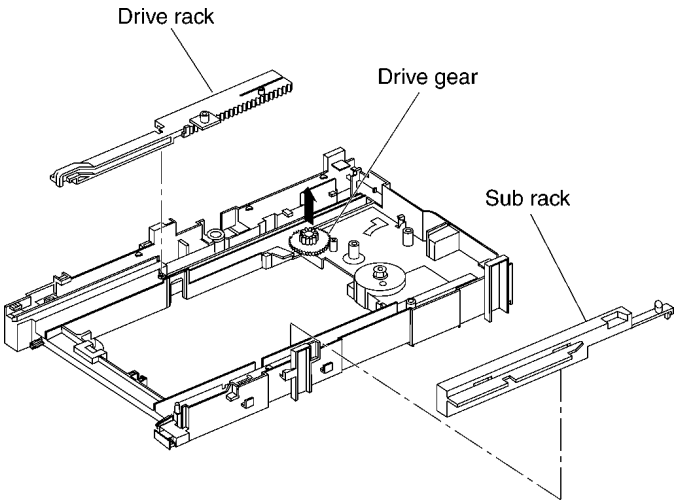

8.5. Loading motor P.C.B.

1. Unscrew the screws.

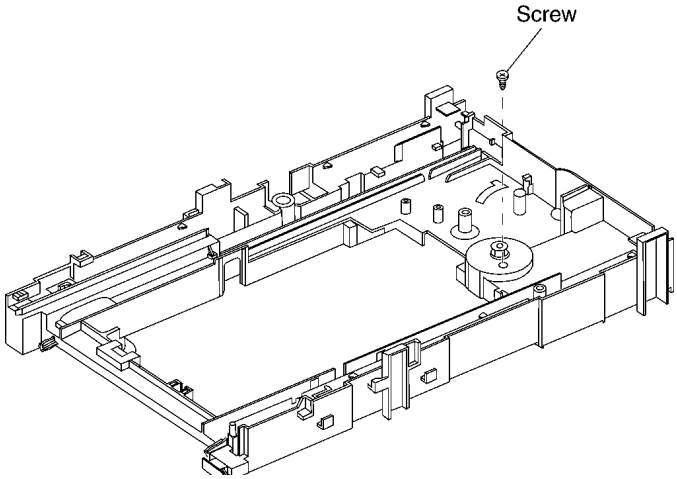

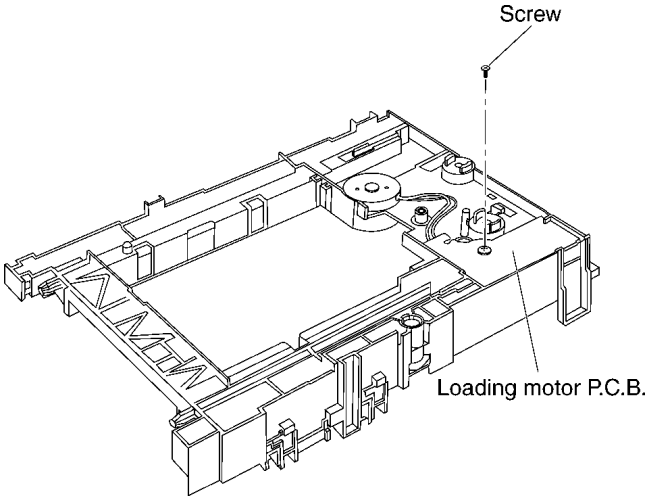

8.6. Optical Pickup Unit

8.6.1. Cautions to Be Taken in Handling the Optical Pickup Unit

The laser diode in the optical pickup unit may be damaged due to electrostatic discharge generating from clothes or human body. Use due caution to electrostatic discharge damage when servicing the laser diode.

1. Do not give a considerable shock to the optical pickup unit as it has an extremely high-precise structure.
2. To prevent the laser diode from the electrostatic discharge damage, the Intermediate FFC of the optical pickup unit removed from the PCB should be short-circuited with a short pin or a clip.
3. The Intermediate FFC may be cut off if an excessive force is applied to it. Use caution when handling the Intermediate FFC.
4. The antistatic FPC is connected to the new optical pickup unit. After replacing the optical pickup unit and connecting the fIntermediate FFC, cut off the antistatic FPC.

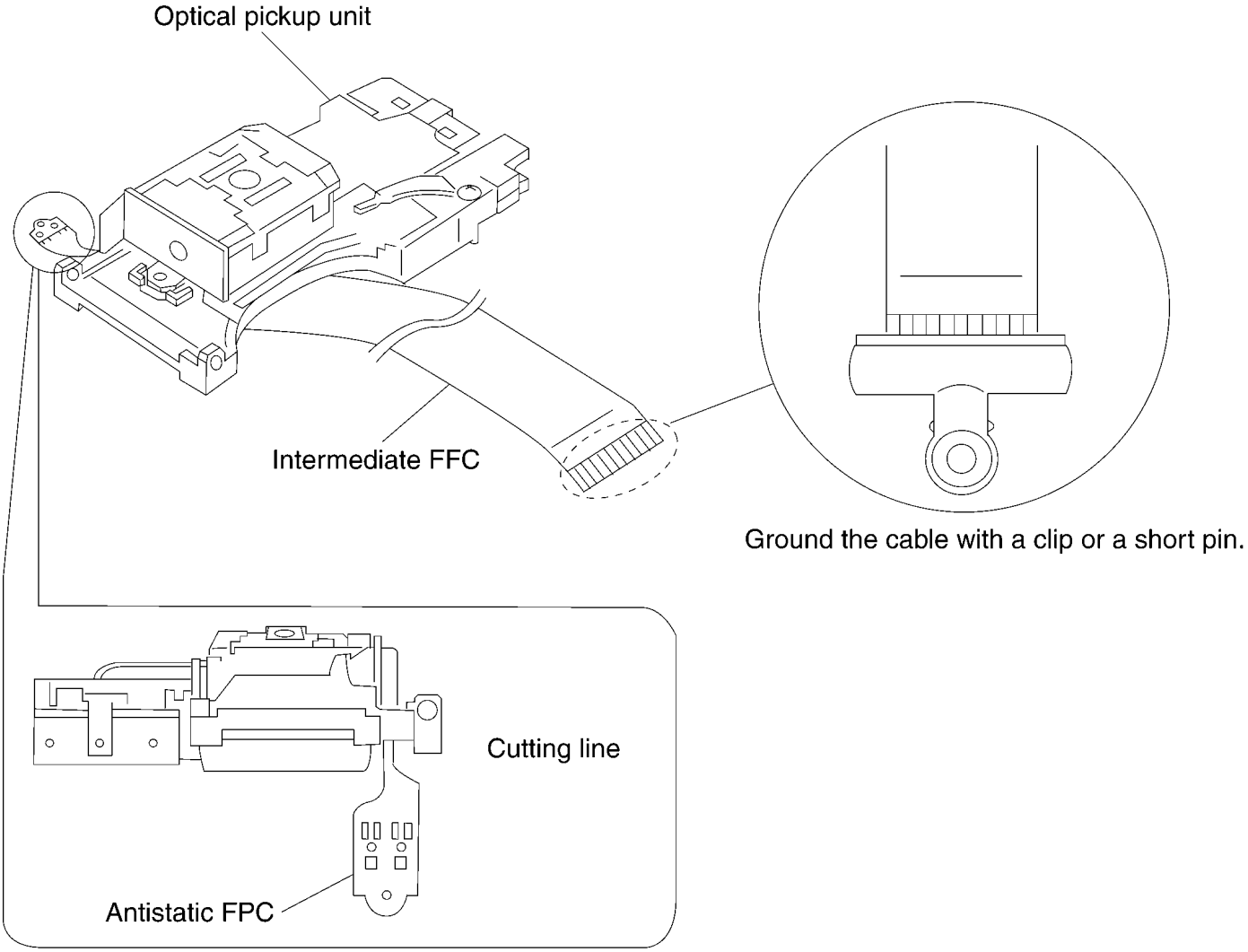

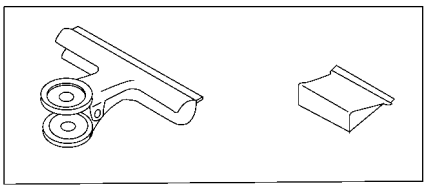

Clip or Short pin

8.6.2. Procedure for Disassembling the Optical Pickup Unit

1. Move the optical pickup unit in the arrow direction till it stops.

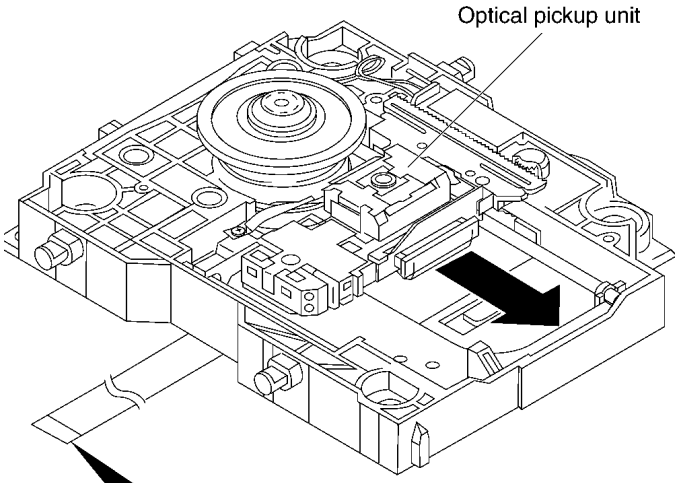

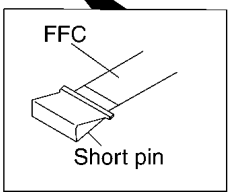

[Caution]
Insert the short pin into the FFC of the optical pickup unit.
[See"Caution to be taken in handling the optical pickup unit"]

2. Unscrew the screws.

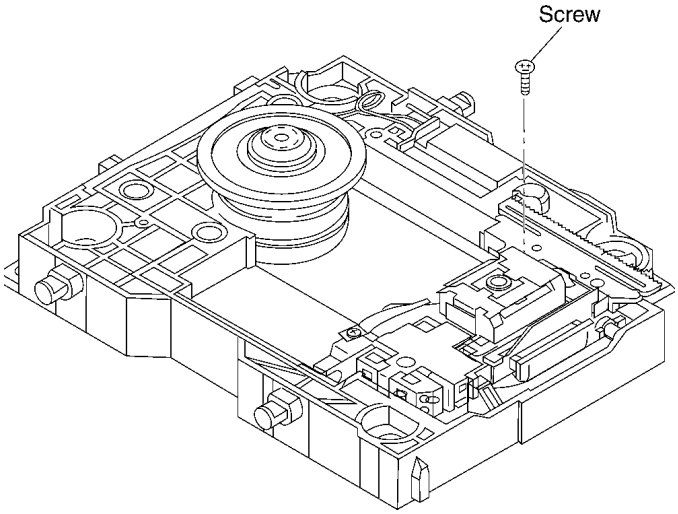

3. Remove the drive rack.

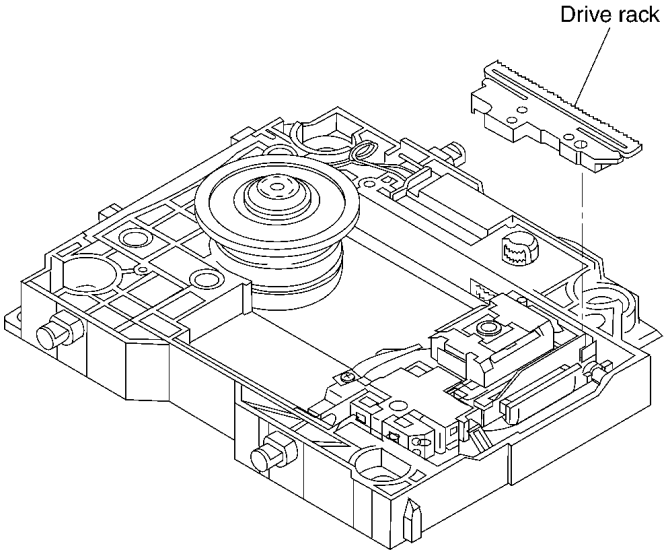

4. Unscrew the screw.
5. Slide the shaft in the arrow direction.

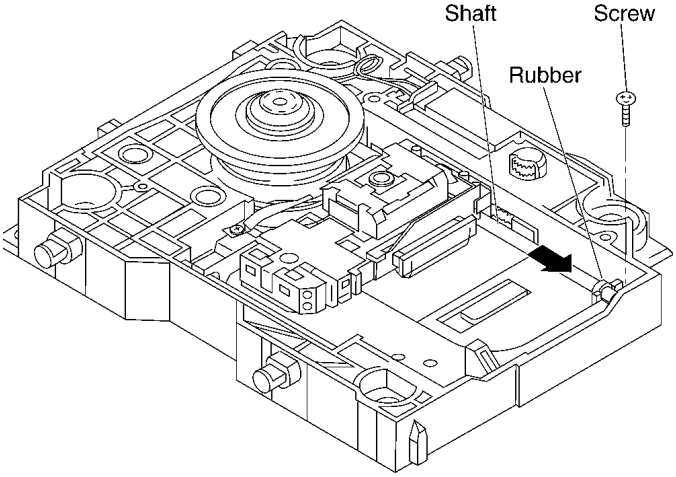

6. Lift the optical pickup unit with the shaft.

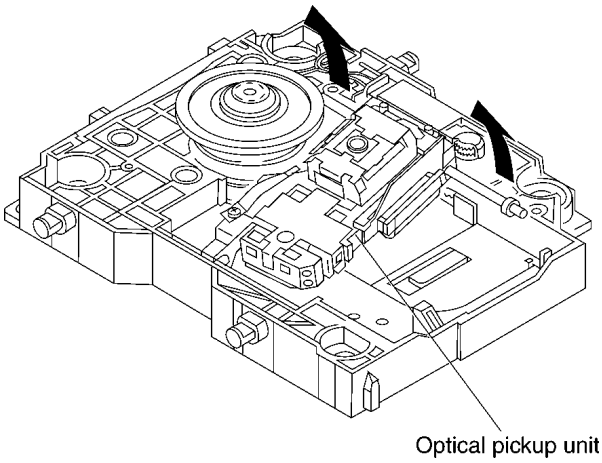

7. Remove the optical pickup unit.

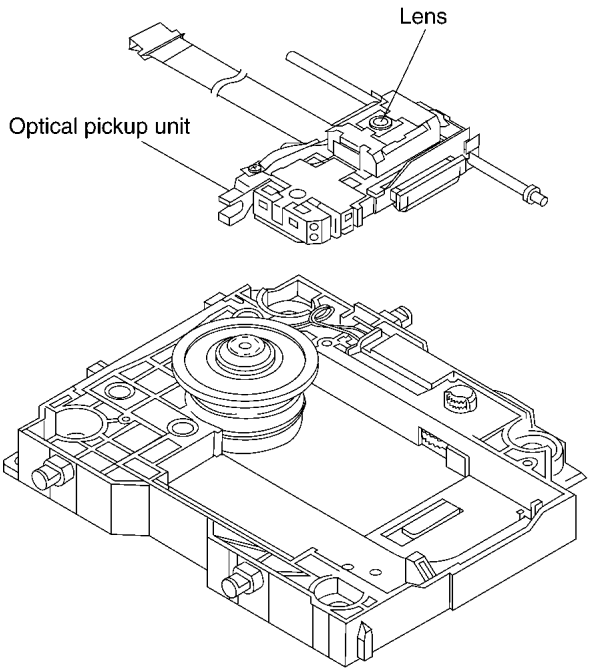

[Caution]
1. Do not give a considerable shock to the optical pickup unit as it has an extremely high-precise structure.
2. Do not touch the lens in the optical pickup unit.

8. Pull the shaft and the rubber out.

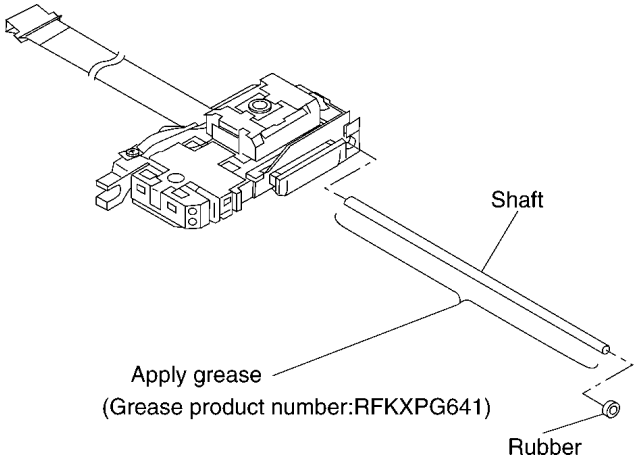

<Assembling the optical pickup unit>

1. Pass the intermediate FPC through the frame hole.
2. Align the guide section of the optical pickup unit with the rail.
3. Install the shaft top to the holder.

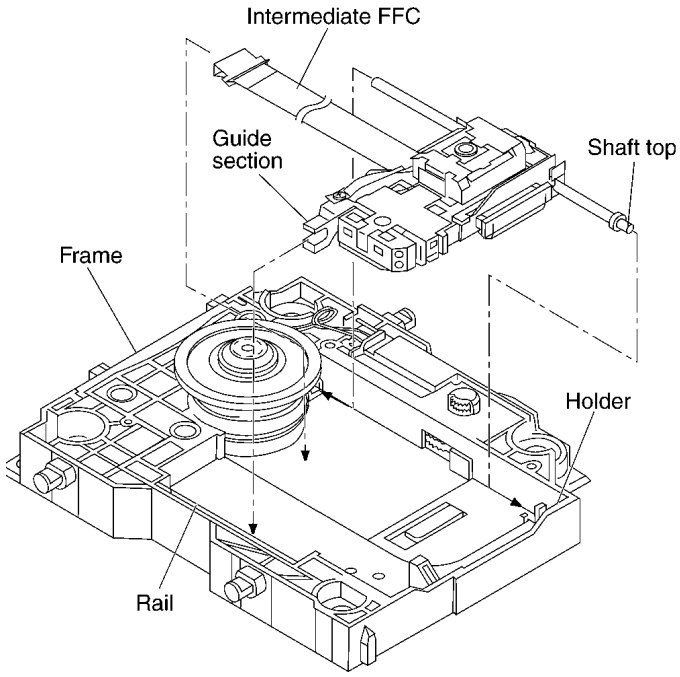

4. The intermediate FFC is fixed as shown below.

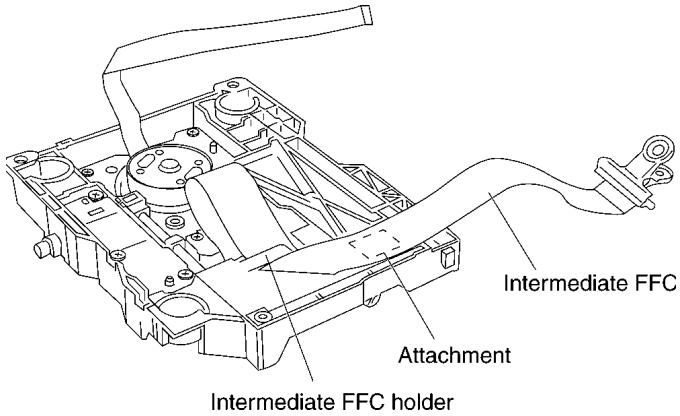

8.7. Traverse Motor

1. Unscrew the screws.

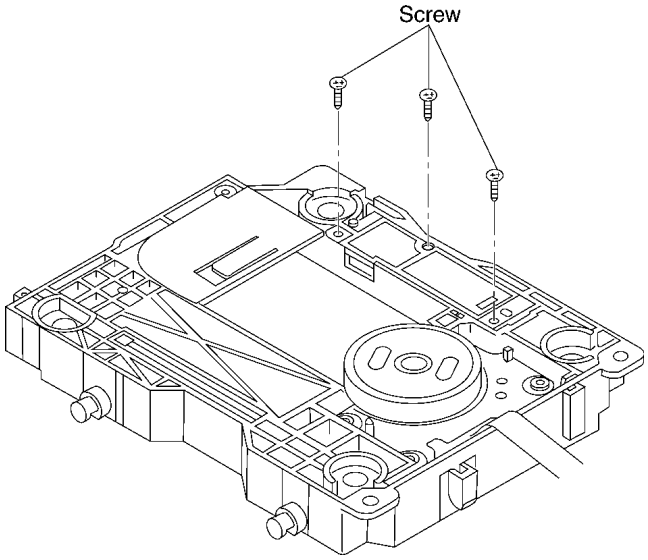

2. Remove the cover while lifting the inner gear.

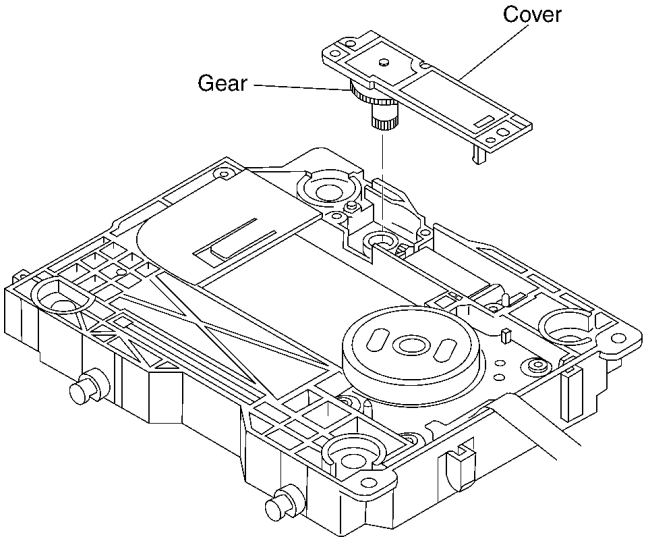

3. Remove the solders.

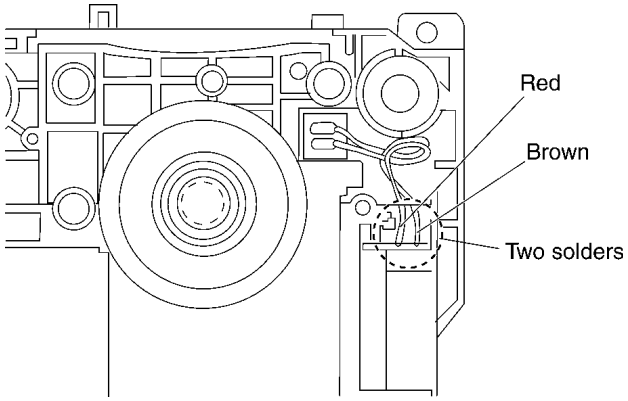

4. Remove the traverse motor.

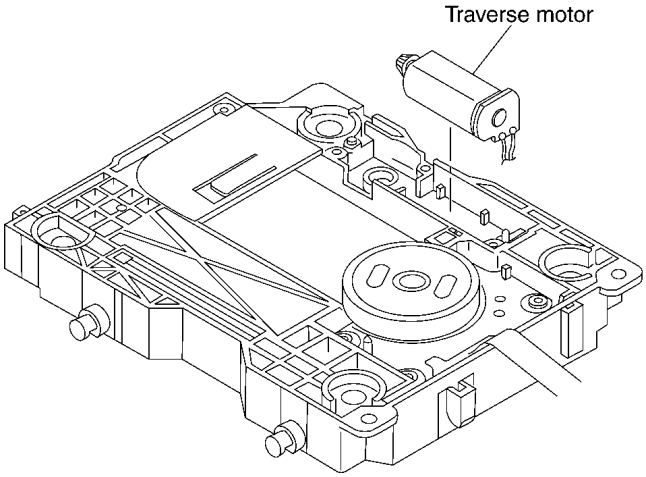

9 SELF-DIAGNOSIS FUNCTION AND SERVICE MODES

9.1. Optical Pickup Breakdown Diagnosis

The optical pickup self-diagnosis function and tilt adjustment check function have been included in this unit. When repairing, use the following procedure for effective Self-diagnosis and tilt adjustment.Be sure to use the self-diagnosis function before replacing the optical pickup when "NO DISC" is displayed. As a guideline, you should replace the optical pickup when the value of the laser drive current is more than 55.

Note:

Press the power button to turn on the power, and check the value within three minutes before the unit warms up. (Otherwise, the result will be incorrect.)

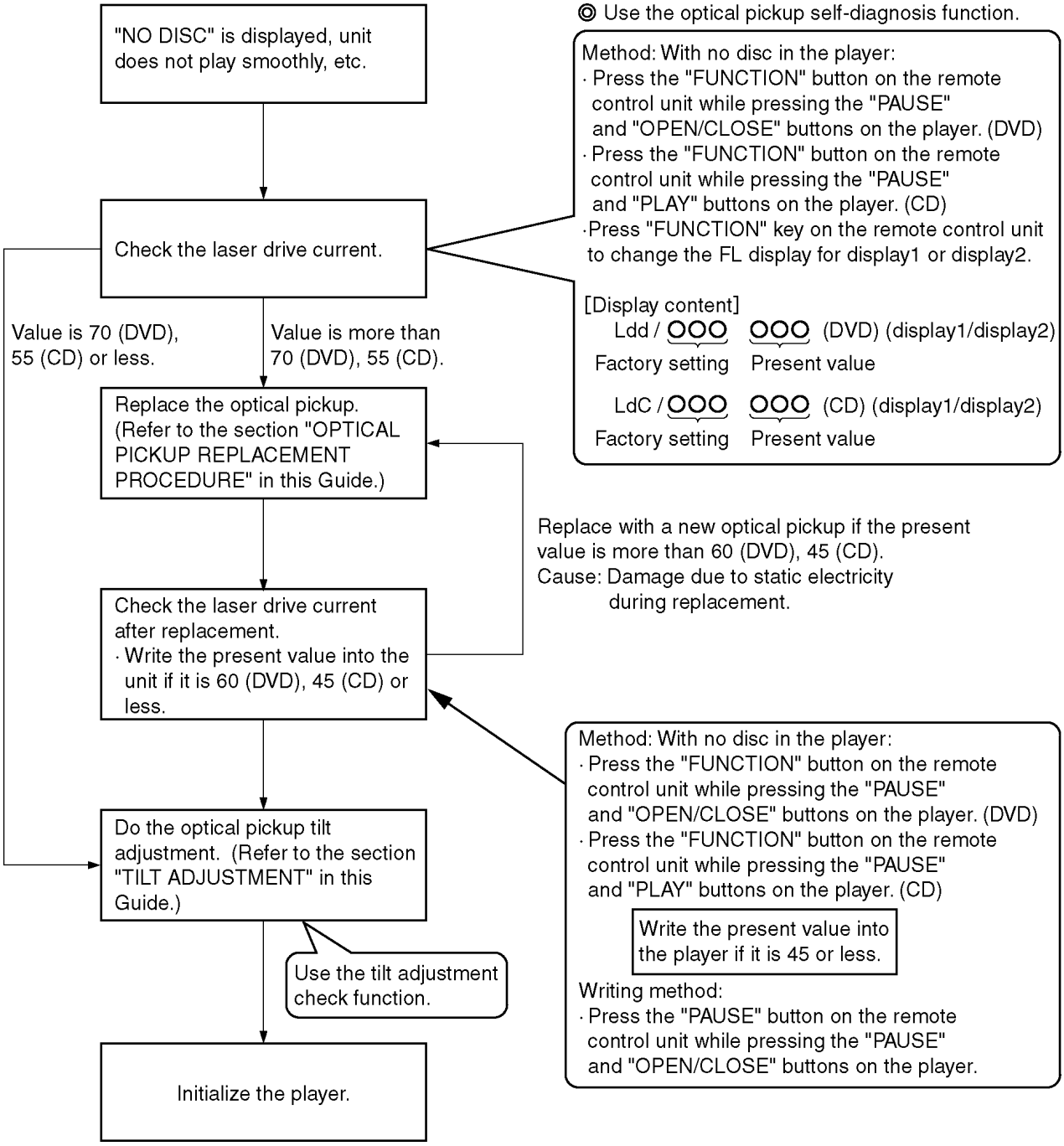

9.2. Service Mode Table 1

The service modes can be activated by pressing various button combination on the player and remote control unit.

Player buttons	Remote control unit buttons	Application	Note
PAUSE + OPEN/CLOSE	0	Displaying the UHF display F_ _ _	Refer to section 9.3. Self-Diagnosis Function.
	5	Jitter check, tilt adjustment *Display shows J_xxx/yyy_zz "yyy" and "zz" shown to the right have nothing to do with the jitter value. "yyy" is the error counter, while "zz" is the focus drive value. Refer to section 11.4. for Optical Pickup Tilt Adjustment Procedure.	Refer to section 11.4. Optical Pickup Tilt Adjustment
	6	Checking the region numbers and broadcast system	
	7	Checking the program version	Check the IC8651 FLASH ROM program.
	9	Lighting Confirmation Function of Display Tube	
	FUNCTION	Checking the laser drive current	Refer to section 8 Optical Pickup Replacement Procedure.
	PAUSE	Writing the laser drive current value after replacing the optical pickup (do not use for anything other than optical pickup replacement)	
PAUSE QUICK OSD OPEN/CLOSE		Initializing the DVD player (restoring factory preset settings)	Refer to section 9.5. Initializing the DVD player.

9.3. DVD Self Diagnostic Function-Error Code

Error Code	Error Content	Additional error explanation	Defect 1	Defect 2	Defect 3	Defect 4
	U, H error					
U11	Focus error					
U15	Unfinalized DVD-R					
U70-1	HDMI/DVI non-HDCP compliance	Occurs when connection is HDMI/DVI and the picture receiver is not compliant with HDCP. HDCP: Copyright protection technology Digital video signal encryption method				
U70-2	HDMI/DVI EDID reading error	Occurs when connection is HDMI/DVI and EDID data for the picture receiver cannot be read.				
U70-3	HDMI/DVI authentication error	Occurs when connection is HDMI/DVI and authentication of the picture receiver (using HDCP) failed.				
H01	Tray loading error					
H02	Spindle servo error	(Spindle servo, DV3.2 (IC8001) SP motor, CLV servo error)				
H03	Traverse servo error					
H04	Tracking servo error					
H05	Seek error					
H06	Power error	Cannot switch off the power because of the panel and system computer communication error				
H07	Spindle motor drive error		Spindle motor ass'y			
	DSC related					
F500	DSC error	DV3.2 (IC8001) stops in the occurence of servo error (starup, focus error, etc)	Optical pickup	DV3.2 (IC8001)	servo drive	
F501	DSC not Ready	DSC-system computer communication error (Communication failure caused by idling of DSC)	DV3.2 (IC8001)			
F502	DSC Time out error	Similar disposal as F500	Optical pickup	DV3.2 (IC8001)	servo drive	
F503	DSC communication Failure	Communication error (result error occured although communication command was sent)	DV3.2 (IC8001)	EEPROM (IC8611)		
F505	DSC Attention error	Similar disposal as F500	Optical pickup	DV3.2 (IC8001)	servo drive	
F506	Invalid media	Disc is flipped over, TOC unreadable, incompatible disc	DISC	DV3.2 (IC8001)		
	ODC related					
F600	Access failure to management information caused by demodulation error	Operation stopped because navigation data is not accessible caused by the demodulation defect	DV3.2 (IC8001)			
F601	Indeterminate sector ID requested	Operation stopped caused by the request to access abnormal ID data	DV3.2 (IC8001)			

Error Code	Error Content	Additional error explanation	Defect 1	Defect 2	Defect 3	Defect 4
F602	Access failure to LEAD-IN caused by demodulation error	LEAD IN data unreadable				
F603	Access failure to KEYDET caused by demodulation error	Access failure to CSS data of disc				
F610	ODC abnormality	No permission for command execution	DV3.2 (IC8001)			
F611	6626 QCODE don't read Error	Access failure to seek address in CD series	DV3.2 (IC8001)			
F612	No CRC OK for a specific time	Access failure to ID data in DVD series	DV3.2 (IC8001)			
F630	No reply to KEY DET enquiry	(for internal use only)				
F631	CPPM KEY DET is not available till the FILE terminal	(CPPM file system is unreadable caused by scratches)	DISC	CPPM (*1)		
F632	CPPM KEY DET is not available	Been revoked or falsified	DISC	EEPROM (IC8611)	CPPM (*1)	
	Disc code					
F103	Illegal highlight Position	Big possibility of disc specification violation during highlight display	DISC			
	HIC Error					
F4FF	Force initialize failure (time out)		EEPROM (IC8611)	DV3.2 (IC8001)		
	Micro computer error					
F700	MBX overflow	When replying message to disc manager				
F701	Message command does not end	Next message is sent before replying to disc manager				
F702	Message command changes	Message is changed before it is sent as a reply to disc manager				
F880	Task number is not appropriate	Message coming from a non-existing task				
F890	Sending message when message is being sent to AV task	Sending message to AV task				
F891	Message couldn't be sent to AV task	Begin sending message to AV task				
F893	FROM falsification		FROM (IC8651)	DV3.2 (IC8001)		
F894	EEPROM abnormality		EEPROM (IC8611)	Serial communication on Ione		
F895	Language area abnormality	Firm version agreement check for factory preset setting failure prevention	FROM (IC8651)			
F896	No existence model	Firm version agreement check for factory preset setting failure prevention				
F897	Initialize is not completed	Initialize completion check for factory preset setting failure prevention				
F898	Disagreement of hardware and software	Unsuitable combination of AV DECORDER, SDRAM and FLASH ROM (firmware)				
F8A0	Message command is not appropriate	Begin sending message to AV task				

Note:

An error code will be canceled if a power supply is turned OFF.

*1: CPPM is the copy guard function beforehand written in the disk for protection of copyrights.

9.4. Last Error Code saved during NO PLAY

Error code	Error Content	System computer	Setting task	System computer internal error code
F0BF	6) Cannot playback because physical layer is not recoginizable	PCND_NOPLAY PHYSICAL 0x50	DriveManager	0xDOBF
F0C0	8) DVD: Cannot playback because it is not DVD Video/Adio/VR	PCND_NOPLAY VIDEO 0x70	DiscManager	0xDOC0
F0C1	9) DVD: Prohibited by the restricted region code	PCND_NOPLAY RCD 0x80	DiscManager	0xDOC1
F0C2	A) DVD: PAL restricted playback	PCND_NOPLAY PAL 0x90	DiscManager	0xDOC2
F0C3	B) DVD: Parental lock setting prohibits the playback of the entire title	PCND_NOPLAY PTL 0xA0	DiscManager	0xDOC3
F0C4	C) VCD: Prohibited because it is in PHOTO CD fromat	PCND_NOPLAY PHOTO CD 0xB0	DiscManager	0xDOC4
F0C5	VCD/CD: Prohibited because it is CDROM without CD-DA	PCND_NOPLAY CDROM 0xC0	DiscManager	0xDOC5

9.5. Service mode table 2

Pressing various button combinations on the player and remote control unit can activate the service modes.

Item	Player mode and button combination	Function	Display	Cancellation method
Jitter check	In STOP mode within disc, press PAUSE and OPEN/CLOSE buttons on the player, and "5" button on the remote control unit. (Press "FL SELECT" key on the remote control unit to change the FL display for Display1 or Display2.)	Jitter check Jitter rate is measured and displayed. Measurement is repeatedly done in the cycle of one second. Read error counter starts from zero upon mode setting. When target block data failed to be read out, the counter advances by one increment. When the failure is caused by minor error, it may be corrected when retried to enable successful reading. In this case, the counter advances by one. When the error persists even after retry, the counter may jump by two or more.	J _xxx/yyy_zz(display1/display2) └ Focus drive value └ Read error counter └ Jitter rate └ Jitter check mode Jitter rate is shown in decimal notation to one place of decimal. Focus drive value is shown in hexadecimal notation.	Press STOP or OPEN/CLOSE button.
Error code check	In STOP (no disc) mode, press PAUSE and OPEN/CLOSE buttons on the player, and "0" button on the remote control unit. * With pointing of cursor up and down on display, the panel controller switches serial number of history and sends out the command accordingly.	Error code check The latest error code stored in EEPROM is displayed.	Error code (play_err) is expressed in the following convention. Error code = 0 x DAXX is expressed: → nn UXX Error code = 0 x DBXX is expressed: → nn HXX Error code = 0 x DXXX is expressed: → nn FXXX Error code = 0 x C000 is expressed: → nn F--- * "nn" denotes the serial number of history.(01～20) * "xx" denotes the error code.	Cancelled automatically 5 seconds later.
Initial setting of laser drive current	In STOP (no disc) mode, press PAUSE and OPEN/CLOSE buttons on the player, and PAUSE button on the remote control unit. (Press "FL SELECT" key on the remote control unit to change the FL display for Display1or Display2.)	Initial setting of laser drive currentInitial current value for each of DVD laser and CD laser is separately saved in EEPROM.	LdO/034_028(display1/display2) └ DVD laser current measurement └ CD laser current measurement └ Laser current measurement mode The value denotes the current in decimal notation. The above example shows the initial current is 34mA and 28mA for DVD laser and CD laser respectively when the laser is witched on.	Cancelled automatically 5 seconds later.
DVD laser drive current measurement	In STOP (no disc) mode, press PAUSE and OPEN/CLOSE buttons on the player, and FUNCTION button on the remote control unit. (Press "FL SELECT" key on the remote control unit to change the FL display for Display1 or Display2.)	DVD laser drive current measurement ·DVD laser drive current is measured and the result is displayed together with the initial value stored in EEPROM. After the measurement, DVD laser emission is kept on. It is turned off when POWER key is switched off. (It is also turned off when POWER button on the player is switched off.)	Ldd/034_032(display1/display2) └ Measured current └ Initial current stored in EEPROM └ DVD laser current measurement mode The value denotes the current in decimal notation. The above example shows the initial current is 34mA and the measured value is 32mA.	Cancelled automatically 5 seconds later.
ADSC internal RAM data check	In STOP (no disc) mode, press PAUSE and OPEN/CLOSE buttons on the player, and RETURN button on the remote control unit. (Press "FL SELECT" key on the remote control unit to change the FL display for Display1 or Display2.)	ADSC internal RAM data check ·ADSC internal RAM data is read out and displayed. Change the address with CLEAR key operation to show the data for 11 addresses.	A_FbO/A_0000(display1/display2) └ RAM data for specified address └ Address └ ADSC internal RAM data check mode The value is shown in hexadecimal notation. The above example shows the data in ADSC address DFAh is 6901h.	Press STOP or OPEN/CLOSE button.
Servo process display	In STOP (no disc) mode, press PAUSE and PLAY buttons on the player, and "7" button on the remote control unit.	Servo process display The servo process from STOP to ACCESS is displayed.	————	Pull out the AC cord.
CD laser drive current measurement	In STOP (no disc) mode, press PAUSE and PLAY buttons on the player, and FUNCTION button on the remote control unit. (Press "FL SELECT" key on the remote control unit to change the FL display for Display1 or Display2.)	CD laser drive current measurement CD laser drive current is measured and the result is displayed together with the initial value stored in EEPROM. After the measurement, CD laser emission is kept on. It is turned off when POWER key is switched off. (It is also turned off when POWER button on the player is switched off.)	LdC/028_026(display1/display2) └ Measured current └ Initial current stored in EEPROM └ CD laser current measurement mode The value denotes the current in decimal notation. The above example shows the initial current is 28mA and the measured value is 26mA.	Cancelled automatically 5 seconds later.

Item	Player mode and button combination	Function	Display	Cancellation method
Version display	In STOP (no disc) mode, press PAUSE and OPEN/CLOSE buttons on the player, and "7" button on the remote control unit. (Press "FL SELECT" key on the remote control unit to change the FL display for Display1 or Display2.)	Version display	srrr/xxyzzz(display1/display2) System controller release number System controller model number System controller generation Panel controller release number Panel controller model number ※ When check this item, connect this player to monitor TV and check with watching the display shown on the monitor.	Cancelled automatically 5 seconds later.
Lighting of display tube	In STOP (no disc) mode, press PAUSE and OPEN/CLOSE buttons on the player, and "9" button on the remote control unit.	Lighitng of display tube	———————	Repeat the same operation.
Dealer's lock	In STOP mode, press STOP button on the player, and POWER button on the remote control unit for 1 second or longer.	Dealer's lock The lock is switched ON or OFF. When dealer's lock is ON, it prohibits switching off of the secondary power and tray opening. When the lock is switched, its ON/OFF status is stored in EEPROM.	· "LOC" sign appears when dealer's lock is switched on, or when secondary power key or tray opening key is pressed while the lock is on. ·"UNLOC" sign appears when dealer's lock is switched off.	Repeat the same operation.
Initialization	In STOP (no disc) mode, press PAUSE, QUICK OSD and OPEN/CLOSE buttons on the player for 3 seconds or longer.	Initialization User settings are cancelled and player is initialized to factory setting.	"Inl"	
Region display	In STOP (no disc) mode, press PAUSE and OPEN/CLOSE buttons on the player, and "6" button on the remote control unit.	Region display	wxyzzz Panel controller jumper information N: NTSC / 6: PAL60 N: noPAL / P: PAL Region No.	Cancelled automatically 5 seconds later.

Item	Player mode and button combination	Function	Display	Cancellation method
Timer 1 check	In STOP (no disc) mode, press PAUSE and PLAY buttons on the player, and "5" button on the remote control unit. (Press "FL SELECT" key on the remote control unit to change the FL display for Display1 or Display2.	Timer 1 check Laser operation timer Operation time is measured separately for DVD laser and CD laser.	t11234/5678(display1/display2) Shown to the display1 is DVD laser time, and to the display2 CD laser time. Time is shown in 4 digits of decimal notation in a unit of 10 hours. "0000" will follow "9999".	Cancelled automatically 5 seconds later.
Timer 1 reset	While displaying Timer 1 data, press STOP and PLAY buttons on the player, and "5" button on the remote control unit. (Press "FL SELECT" key on the remote control unit to change the FL display for Display1 or Display2.	Timer 1 reset Laser operation timer Operation time of both DVD laser and CD laser is reset all at once.	t10000/0000(display1/display2)	Cancelled automatically 5 seconds later.
Timer 2 check	In STOP (no disc) mode, press PAUSE and PLAY buttons on the player, and "6" button on the remote control unit. (Press "FL SELECT" key on the remote control unit to change the FL display for Display1 or Display2.	Timer 2 check Spindle motor operation timer	t21234/5(display1/display2) Time is shown in 5 digits of decimal notation in a unit of 10 hours. "00000" will follow "99999".	Cancelled automatically 5 seconds later.
Timer 2 reset	While displaying Timer 2 data, press STOP and PLAY buttons on the player and "6" button on the remote control unit. (Press "FL SELECT" key on the remote control unit to change the FL display for Display1 or Display2.	Timer 2 reset Spindle motor operation timer	t20000/0(display1/display2)	Cancelled automatically 5 seconds later.

9.6. Sales demonstration lock function

This function prevents discs from being lost when the unit is used for sales demonstrations by disabling the disc eject function. "LOC" is displayed on the unit, and ordinary operation is disabled.

9.6.1. Setting

The sales demonstration lock is set by simultaneously pressing STOP button on the player and POWER button on the remote control unit for 1 second or longer.

9.6.2. Cancellation

The lock can be cancelled by the same procedure as used in setting. ("UNLOC" is displayed on cancellation. Disconnecting the power cable from power outlet does not cancel the lock.)

9.7. Handling After Completing Repairs

Use the following procedure after completing repairs.

9.7.1. Method

Confirm that the power is turned on:

1. Press the "OPEN/CLOSE" button to close the tray.

2. Press the "POWER" button to turn off the power.

3. Disconnect the power plug from the outlet.

9.7.2. Precautions

Do not disconnect the power plug from the outlet with the tray still open, then close the tray manually.

10 SERVICE PRECAUTIONS

10.1. Recovery after the dvd player is repaired

- When FROM or module P.C.B. is replaced, carry out the recovery processing to optimize the drive.

  Playback the recovery disk to process the recovery automatically.
- Recovery disc [Product number: RFKZD03R005] (RFKZD03R004 can not be recovered as a partial item.

  So use the new recovery disc, RFKZD03R005.)
- Performing recovery
  1. Load the recovery disc RFKZD03R005 on to the player and run it.
  2. Recovery is performed automatically. When it is finished, a message appears on the screen.
  3. Remove the recovery disc.
  4. Turn off the power.

Note:

This unit requires no initialization process carried out after the traditional DVD players were repaired.

When the recovery measures are taken, the customer setting will return to the factory setting as same as the procedure described in item of "Initialization" in 9.5. is carried out. Write down the contents of the setting before recovery processing, and reset the player.

10.2. Firmware version-up of the DVD player

- The firmware of the DVD player may be renewed to improve the quality including operationability and playerbility to the substandard discs. processing to optimize the drive.

  The recovery disc has also firmware version-up.
- After version-up, recovery processing is executed automatically.
- Part number of the recovery disc for version-up will be noticed when it is supplied.
- Updating firmware
  1. Load the recovery disc that is supplied to the player and run it.
  2. Firmware version of the player is automatically checked. Appropriate message appears whenever necessary.
  3. Using remote controller´s cursor key, select whether version updating is to be done or not. (Selection of Yes/No)
  4. a. If Yes is selected, version updating is performed.

     b. If No is selected, only recovery is performed.
  5. a. When updating is finished, remove the disc according to the message appearing on the screen.

     b. Remove the disc according to the message appearing on the screen.
  6. Turn off the power.

Note:

If the AC power supply is shut out during version-up due to a power failure, the version-up is improperly carried out.

In such a case, replace the FROM and carry out the version-up again.

11 ADJUSTMENT PROCEDURES

11.1. Service Tools and Equipment

Application	Name	Number
Tilt adjustment	DVD test disc	DVDT-S15 or DVDT-S01
	TORX screw driver (T6)	Available on sales route. (T6) or RFKZ0185
Inspection	Extension cable (module P.C.B. to mother P.C.B.)	VUC8026
	Extension cable (module P.C.B. to mother P.C.B.)	RFKZ0106
Others	Hanarl	VFK1784
	Grease	RFKXPG641
	Drysurf	RFKXGUD24
Confirmation	CD test disc	PVCD-K06 or any other commercially available disc
	VCD test disc	PVCD-K06 or any other commercially available disc
	Recovery disc	RFKZD03R005

11.2. Important points in adjustment

11.2.1. Important points in optical adjustment

・Before starting optical adjustment, be sure to take anti-static measures.

・Optical pickup tilt adjustment is needed after replacement of the following components.

1. Optical pickup unit
2. Spindle motor unit
3. Optical pickup peripheral parts (such as rail)

Notes

Adjustment is generally unnecessary after replacing other parts of the traverse unit. However, make adjustment if there is a noticeable degradation in picture quality. Optical adjustments cannot be made inside the optical pickup. Adjustment isgenerally unnecessary after replacing the traverse unit.

11.2.2. Important points in electrical adjustment

・Follow the adjustment procedures described in this Manual.

11.3. Storing and Handling Test Discs

・Surface precision is vital for DVD test discs. Be sure to store and handle them carefully.

1. Do not place discs directly onto the workbench, etc., after use.
2. Handle discs carefully in order to maintain their flatness. Place them into their case after use and store them vertically. Store discs in a cool place where they are not exposed to direct sunlight or air from air conditioners.
3. Accurate adjustment will not be possible if the disc is warped when placed on a surface made of glass, etc. If this happens, use a new test disc to make optical adjustments.
4. If adjustment is done using a warped disc, the adjustment will be incorrect and some discs will not be playable.

11.4. Optical adjustment

11.4.1. Optical pickup tilt adjustment

Measurement point	Adjustment point	Mode	Disc
	Tangential adjustment screw Tilt adjustment screw	T01 (inner periphery) play T30 (central periphery) play T43 (outer periphery) play	DVDR-S15 or DVDT-S01
Measuring equipment		Adjustment value	
None (Main unit display for servicing is used.)		Adjust to the minimum jitter value.	

11.4.1.1. Adjustment procedure

1. While pressing PAUSE and OPEN/CLOSE buttons on the main unit, press "5" on the remote control unit.
2. Confirm that "J_xxx/yyy_zz" is shown on the front display.

   For your information:

   "yyy" and "zz" shown to the right have nothing to do with the jitter value. "yyy" is the error counter, while "zz" is the focus drive value.

   Note:

   Jitter value appears on the front display.
3. Play test disc T30 (central periphery).
4. Adjust tangential adjustment screw so that the jitter value is minimized.
5. Play test disc T30 (central periphery).
6. Adjust tilt adjustment screw 1 so that the jitter value is minimized.
7. Play test disc T30 (central periphery).
8. Adjust tilt adjustment screw 2 so that the jitter value is minimized.
9. Repeat adjusting tilt adjustment screws 1 and 2 alternately until the jitter value is minimized.
10. Finally please reproduce T01 (inner periphery) and T43 (outer periphery) and check the jitter value. (Please readjust, when the jitter value is extremely different.)

11.4.1.2. Important points

1. Make tangential adjustment first, and then make tilt adjustment.
2. Repeat adjusting two or three times to find the optimum point.
3. Finish the procedure with tilt adjustment.

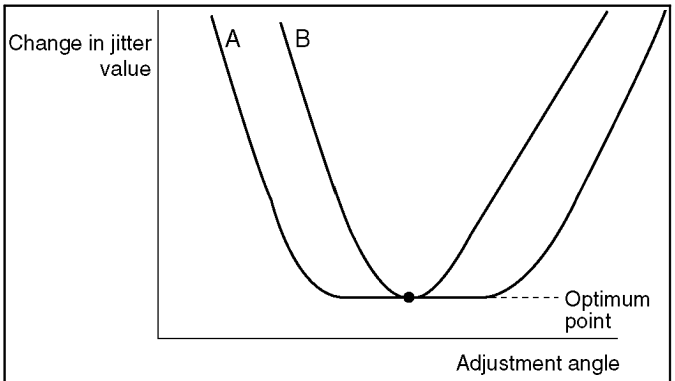

Jitter value depends on the model:
1. If the jitter value changes like B, the optimum point is easy to find.
2. If the jitter value changes like A, set the optimum point near the middle.

Note:

When FFC has covered the adjustment screw, please insert a screwdriver, evading FFC(s).

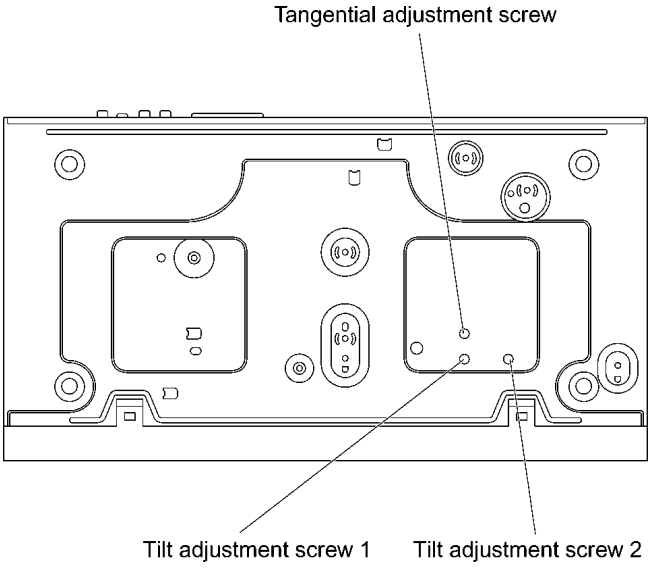

11.4.1.3. Check after adjustment

Play test disc or any other disc to make sure there is no picture degradation in the inner, middle and outer peripheries, and no audio skipping. After adjustment is finished, lock each adjustment screw in position using screw lock.

11.4.1.4. Procedure for screw lock

Please perform a screw lock in which by the side of the tip or head of an adjustment screw.

<When a screw lock is performed to the tip part side of an adjustment screw>

1. After adjustment, remove top panel.
2. After pulling out a tray to the position which does not become obstructive,remove clamper plate.
3. Fix adjustment screw with screw lock.
4. After fixing, reassemble clamper plate and top panel.

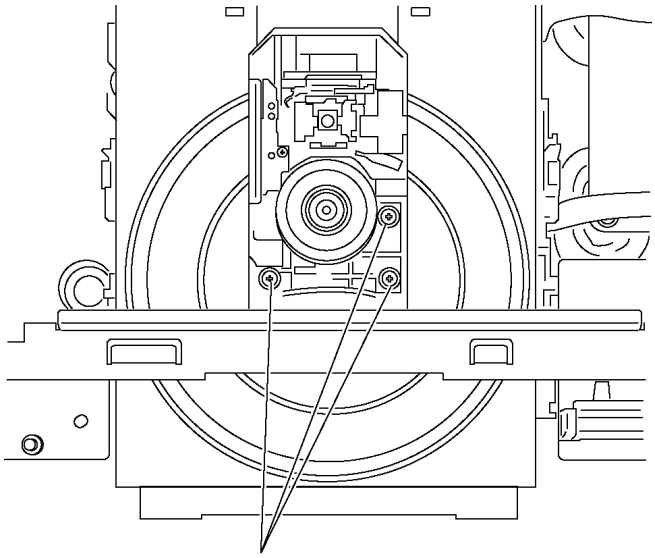

Screw lock
(adjustment screw)

<When a screw lock is performed to the head side of an adjustment screw>

1. After adjustment, remove top panel, front panel, rear panel and mechanism unit in this sequence.
2. Lay the mechanism unit upside down, and fix adjustment scwer with screw lock.
3. After fixing, reassemble mechanism unit, rear panel, front panel and top panel.

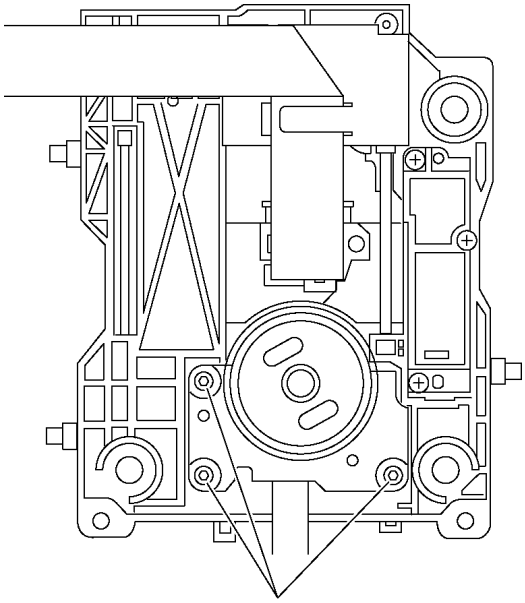

Screw lock
(adjustment screw)

It is also possible to perform screw lock on the head of an adjustment screw after an adjustment end using an injector etc. from the hole at the bottom of a product (hole of bottom chassis), without decomposing.

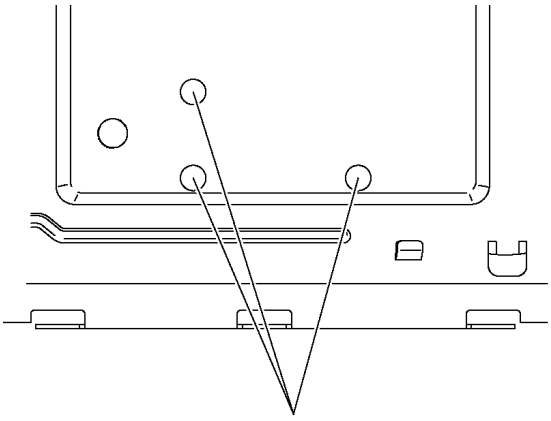

Hole of bottoom chassis

12 ABBREVIATIONS

INITIAL/LOGO		ABBREVIATIONS
A	A0~UP	ADDRESS
	ACLK	AUDIO CLOCK
	AD0~UP	ADDRESS BUS
	ADATA	AUDIO PES PACKET DATA
	ALE	ADDRESS LATCH ENABLE
	AMUTE	AUDIO MUTE
	AREQ	AUDIO PES PACKET REQUEST
	ARF	AUDIO RF
	ASI	SERVO AMP INVERTED INPUT
	ASO	SERVO AMPOUTPUT
	ASYNC	AUDIO WORD DISTINCTION SYNC
B	BCK	BIT CLOCK (PCM)
	BCKIN	BIT CLOCK INPUT
	BDO	BLACK DROP OUT
	BLKCK	SUB CODE BLOCK CLOCK
	BOTTOM	CAP. FOR BOTTOM HOLD
	BYP	BYPATH
	BYTCK	BYTE CLOCK
C	CAV	CONSTANT ANGULAR VELOCITY
	CBDO	CAP. BLACK DROP OUT
	CD	COMPACT DISC
	CDSCK	CD SERIAL DATA CLOCK
	CDSRDATA	CD SERIAL DATA
	CDRF	CD RF (EFM) SIGNAL
	CDV	COMPACT DISC-VIDEO
	CHNDATA	CHANNEL DATA
	CKSL	SYSTEM CLOCKSELECT
	CLV	CONSTANT LINEAR VELOCITY
	COFTR	CAP. OFF TRACK
	CPA	CPU ADDRESS
	CPCS	CPU CHIP SELECT
	CPDT	CPU DATA
	CPUADR	CPU ADDRESS LATCH
	CPUADT	CPU ADDRESS DATA BUS
	CPUIRQ	CPU INTERRUPT REQUEST
	CPRD	CPU READ ENABLE
	CPWR	CPU WRITE ENABLE
	CS	CHIPSELECT
	CSYNCIN	COMPOSITE SYNC IN
	CSYNCOUT	COMPOSITE SYNC OUT
D	DACCK	D/A CONVERTER CLOCK
	DEEMP	DEEMPHASIS BIT ON/OFF
	DEMPH	DEEMPHASIS SWITCHING
	DIG0~UP	FL DIGIT OUTPUT
	DIN	DATA INPUT
	DMSRCK	DM SERIAL DATA READ CLOCK
	DMUTE	DIGITAL MUTE CONTROL
	DO	DROP OUT
	DOUT0~UP	DATAOUTPUT
	DRF	DATA SLICE RF (BIAS)
	DRPOUT	DROP OUT SIGNAL
	DREQ	DATA REQUEST
	DRESP	DATA RESPONSE
	DSC	DIGITAL SERVO CONTROLLER
	DSLF	DATA SLICE LOOP FILTER
	DVD	DIGITAL VIDEO DISC

INITIAL/LOGO		ABBREVIATIONS
E	EC	ERROR TORQUE CONTROL
	ECR	ERROR TORQUE CONTROL REFERENCE
	ENCSEL	ENCODER SELECT
	ETMCLK	EXTERNAL M CLOCK (81MHz/40.5MHz)
	ETSCLK	EXTERNAL S CLOCK (54MHz)
F	FBAL	FOCUS BALANCE
	FCLK	FRAME CLOCK
	FE	FOCUS ERROR
	FFI	FOCUS ERROR AMP INVERTED INPUT
	FEO	FOCUS ERROR AMP OUTPUT
	FG	FREQUENCY GENERATOR
	FSC	FREQUENCY SUB CARRIER
	FSCK	FS (384 OVER SAMPLING) CLOCK
G	GND	COMMON GROUNDING (EARTH)
H	HA0~UP	HOST ADDRESS
	HD0~UP	HOST DATA
	HINT	HOST INTERRUPT
	HRXW	HOST READ/WRITE
I	IECOUT	IEC958 FORMAT DATA OUTPUT
	IPFRAG	INTERPOLATION FLAG
	IREF	I (CURRENT) REFERENCE
	ISEL	INTERFACE MODE SELECT
L	LDON	LASER DIODE CONTROL
	LPC	LASER POWER CONTROL
	LRCK	L CH/R CH DISTINCTION CLOCK
M	MA0~UP	MEMORY ADDRESS
	MCK	MEMORY CLOCK
	MCKI	MEMORY CLOCK INPUT
	MCLK	MEMORY SERIAL COMMAND CLOCK
	MDATA	MEMORY SERIAL COMMAND DATA
	MDQ0~UP	MEMORY DATA INPUT/OUTPUT
	MDQM	MEMORY DATA I/O MASK
	MLD	MEMORYSERIAL COMMAND LOAD
	MPEG	MOVING PICTURE EXPERTS GROUP
O	ODC	OPTICAL DISC CONTROLLER
	OFTR	OFF TRACKING
	OSCI	OSCILLATOR INPUT
	OSCO	OSCILLATOR OUTPUT
	OSD	ON SCREEN DISPLAY
P	P1~UP	PORT
	PCD	CD TRACKING PHASE DIFFERENCE
	PCK	PLL CLOCK
	PDVD	DVD TRACKING PHASE DIFFERENCE
	PEAK	CAP. FOR PEAK HOLD
	PLLCLK	CHANNEL PLL CLOCK
	PLLOK	PLL LOCK
	PWMCTL	PWM OUTPUT CONTROL
	PWMDA	PULSE WAVE MOTOR DRIVEA
	PWMOA, B	PULSE WAVE MOTOR OUT A, B

INITIAL/LOGO		ABBREVIATIONS
R	RE	READ ENABLE
	RFENV	RF ENVELOPE
	RFO	RF PHASE DIFFERENCE OUTPUT
	RS	(CD-ROM) REGISTER SELECT
	RSEL	RF POLARITY SELECT
	RST	RESET
	RSV	RESERVE
S	SBI0, 1	SERIAL DATA INPUT
	SBO0	SERIAL DATA OUTPUT
	SBT0, 1	SERIAL CLOCK
	SCK	SERIAL DATA CLOCK
	SCKR	AUDIO SERIAL CLOCK RECEIVER
	SCL	SERIAL CLOCK
	SCLK	SERIAL CLOCK
	SDA	SERIAL DATA
	SEG0~UP	FL SEGMENT OUTPUT
	SELCLK	SELECTCLOCK
	SEN	SERIAL PORT ENABLE
	SIN1, 2	SERIAL DATA IN
	SOUT1, 2	SERIAL DATA OUT
	SPDI	SERIAL PORT DATA INPUT
	SPDO	SERIAL PORT DATA OUTPUT
	SPEN	SERIAL PORT R/W ENABLE
	SPRCLK	SERIAL PORT READ CLOCK
	SPWCLK	SERIAL PORT WRITE CLOCK
	SQCK	SUB CODE Q CLOCK
	SQCX	SUBCODE Q DATA READ CLOCK
	SRDATA	SERIAL DATA
	SRMADR	SRAM ADDRESS BUS
	SRMDT0~7	SRAM DATA BUS 0~7
	SS	START/STOP
	STAT	STATUS
	STCLK	STREAM DATA CLOCK
	STD0~UP	STREAM DATA
	STENABLE	STREAM DATA INPUT ENABLE
	STSEL	STREAM DATA POLARITY SELECT
	STVALID	STREAM DATAVALIDITY
	SUBC	SUB CODE SERIAL
	SBCK	SUB CODE CLOCK
	SUBQ	SUB CODE Q DATA
	SYSCLK	SYSTEM CLOCK
T	TE	TRACKING ERROR
	TIBAL	BALANCE CONTROL
	TID	BALANCE OUTPUT 1
	TIN	BALANCE INPUT
	TIP	BALANCE INPUT
	TIS	BALANCE OUTPUT 2
	TPSN	OP AMP INPUT
	TPSO	OP AMP OUTPUT
	TPSP	OP AMP INVERTED INPUT
	TRCRS	TRACK CROSSSIGNAL
	TRON	TRACKING ON
	TRSON	TRAVERSE SERVO ON

INITIAL/LOGO		ABBREVIATIONS
V	VBLANK	V BLANKING
	VCC	COLLECTOR POWER SUPPLY VOLTAGE
	VCDCONT	VIDEO CD CONTROL (TRACKING BALANCE)
	VDD	DRAIN POWER SUPPLY VOLTAGE
	VFB	VIDEO FEED BACK
	VREF	VOLTAGE REFERENCE
	VSS	SOURCE POWER SUPPLYVOLTAGE
W	WAIT	BUS CYCLE WAIT
	WDCK	WORD CLOCK
	WEH	WRITE ENABLE HIGH
	WSR	WORD SELECT RECEIVER
X	X	X´ TAL
	XALE	X ADDRESS LATCH ENABLE
	XAREQ	X AUDIO DATA REQUEST
	XCDROM	X CD ROM CHIP SELECT
	XCS	X CHIP SELECT
	XCSYNC	X COMPOSITE SYNC
	XDS	X DATA STROBE
	XHSYNCO	X HORIZONTAL SYNC OUTPUT
	XHINT	XH INTERRUPTREQUEST
	XI	X´ TAL OSCILLATOR INPUT
	XINT	X INTERRUPT
	XMW	X MEMORY WRITE ENABLE
	XO	X´ TAL OSCILLATOR OUTPUT
	XRE	X READ ENABLE
	XSRMCE	X SRAM CHIP ENABLE
	XSRMOE	X SRAM OUTPUT ENABLE
	XSRMWE	X SRAM WRITE ENABLE
	XVCS	X V-DEC CHIPSELECT
	XVDS	X V-DEC CONTROL BUS STROBE
	XVSYNCO	X VERTICAL SYNC OUTPUT

13 VOLTAGE CHART

Note:

- Circuit voltage and waveform described herein shall be regarded as reference information when probing defect point, because it may differ from an actual measuring value due to difference of measuring instrument and its measuring condition and product itself.

13.1. MOTHER P.C.B.

Ref No.	IC1021									IC1101				IC1151						
MODE	1	2	3	4	5	6	7	9		1	2	3		1	2	3	4	5		
PLAY	0	-0.1	-0.1	-0.1	-0.1	-0.1	-0.1	0		2.5	0	3.3		11.5	3.2	9	0	0		
STOP	0	-0.1	-0.1	-0.1	-0.1	-0.1	-0.1	0		2.5	0	3.3		10.3	0	0	0	0		
Ref No.	IC1195																			
MODE	1	2	3	4	5															
PLAY	3.2	3.3	5.1	0	0															
STOP	5.1	0	4.3	3.3	3.3															
Ref No.	IC3501																			
MODE	1	2	3	4	5	6	7	8	9	10	11	12	13	14	15	16				
PLAY	4.9	2.3	0	1.7	0	1.2	0	2.6	2.7	0	3.8	3.8	4.1	1.6	1.5	2.3				
STOP	0	0	0	0	0	0.3	0	0.3	0.3	0	0	0	0	0	0.1	0				
Ref No.	IC3502							IC3802												
MODE	1	2	3	4	5	6		1	2	3	4	5	6							
PLAY	3.1	1.9	4.9	1.8	0	3.9		2.5	0	0	0	2.5	4.9							
STOP	0	0	0	0	0	0		0	0	0	0	0	0							
Ref No.	IC3811																			
MODE	1	2	3	4	5	6	7	8	9	10	11	12	13	14	15	16	17	18	19	20
PLAY	4.9	3.1	0	2.1	4.9	0..5	0	1.5	2.2	4.9	2.5	0	2.1	3.1	2.1	4.8	2.2	2.3	0	0
STOP	4.9	3.1	0	2.2	0	0	0	0	2.2	4.9	2.2	0	2.2	3.1	2.1	4.9	2.2	2.2	0	2.2
Ref No.	IC3811																			
MODE	21	22	23	24	25	26	27	28	29	30	31	32								
PLAY	2.2	0.4	0	0	0.7	0	0	0	0	0	0	2.2								
STOP	2.2	0	0	2.2	0	0	0	0	0	1.4	4.9	2.3								
Ref No.	IC4301									IC4302										
MODE	1	2	3	4	5	6	7	8		1	2	3	4	5	6	7	8			
PLAY	2.5	2.4	2.4	-9	2.4	2.4	2.5	12		2.4	2.4	2.4	-9	2.4	0	0	11.3			
STOP	2.5	2.5	2.4	-8.9	2.5	2.5	2.5	12		2.5	2.5	2.4	-8.9	2.5	2.5	2.5	12			
Ref No.	IC4303									IC4304										
MODE	1	2	3	4	5	6	7	8		1	2	3	4	5	6	7	8			
PLAY	2.4	2.4	2.4	-9	2.4	0	2.4	11.4		2.4	2.4	2.4	-9	2.4	0	0	11.4			
STOP	2.4	2.4	2.4	-8.9	2.4	2.4	2.4	12		2.4	2.5	2.4	-8.9	2.4	2.4	2.5	12			
Ref No.	IC6001																			
MODE	1	2	3	4	5	6	7	8	9	10	11	12	13	14	15	16	17	18	19	20
PLAY	0	1.1	0.4	3.1	3.3	3.3	3.3	3.3	1.6	1.5	0	0	0	0	0	3.3	1.6	3.3	0	3.3
STOP	0	1	0.4	0.6	3.3	3.3	3.3	3.3	1.7	1.5	0	0	3.3	0	3.3	1.7	1.6	3.3	3.3	0
Ref No.	IC6001																			
MODE	21	22	23	24	25	26	27	28	29	30	31	32	33	34	35	36	37	38	39	40
PLAY	0	3.3	3.6	0	3.3	0	0	3.3	-1.8	3.3	3.2	3.3	3.3	0	0	-8.4	-8.5	-8.5	-8.5	-8.5
STOP	3.1	0.7	0.1	3.1	0	3.1	0	3.2	3.3	3.3	-1.9	-1.8	-2.5	3.2	-2.4	3.2	-6.7	-6.6	-3.3	-6.6
Ref No.	IC6001																			
MODE	41	42	43	44	45	46	47	48	49	50	51	52	53	54	55	56	57	58	59	60
PLAY	0	-8.6	-8.5	-8.5	-8.5	-8.6	-8.5	-8.5	-8.6	-8.6	-8.7	-8.7	-8.7	-8.7	-8.7	0	0	0	0	0
STOP	-3	-3	-3	0	-6	0	-9.5	-9.5	-6.6	-6.3	-6.3	-6.3	0	0	-3.1	-3.1	-9.6	3.2	2.9	2.3
Ref No.	IC6001					IC6021				Q1051					Q1115					
MODE	61	62	63	64		1	2	3		1	2	3	4		1	2	3	4	5	6
PLAY	0	0	0	0		1.7	5	0		5.1	0	0	-0.2		5	5	0	5.1	5	5
STOP	0	0	1.2	0		1.7	5	0		0	0	0	0		5	5	0	5.1	5	5
Ref No.	Q3801				Q3821							Q3851				Q3852				
MODE	B	C	E		1	2	3	4	5	6		B	C	E		B	C	E		
PLAY	12.1	11.4	11.9		0	4.2	4.9	0	0	0		0	0	-5.9		0	0	-5.9		
STOP	12.6	11.9	12.5		0	4.2	4.9	0	0.6	0		0	0	0.7		0	0	0.7		
Ref No.	Q4302				Q4422				Q4423				Q4601				Q4611			
MODE	B	C	E		B	C	E		B	C	E		B	C	E		B	C	E	
PLAY	4	0	0		0	0	-5.8		0	0	-5.9		0	0	0		0	0	-5.9	
STOP	0	0	0		0	0	0.7		0	0	0.7		0	0	0.7		0	0	0	
Ref No.	Q4621				Q4622				Q4631				Q4632				Q4641			
MODE	B	C	E		B	C	E		B	C	E		B	C	E		B	C	E	
PLAY	0	0	-5.9		0	0	-9.7		0	0	-5.9		0	0	-9.7		0	0	0	
STOP	0	0	0.7		0	0	-9.5		0	0	0.8		0	0	-9.5		0	0	0	
Ref No.	Q4642				Q4651				Q4652				Q4751				Q4901			
MODE	B	C	E		B	C	E		B	C	E		B	C	E		1	2	3	
PLAY	0	0	0		0	0	0		0	0	0		5	1.8	2.5		12	12.3	11.4	
STOP	0	0	0		0	0	0.7		0	0	-9.5		5	1.8	2.5		12.6	12.6	12	
Ref No.	Q4911				Q6085				QR1115				QR3501				QR3502			
MODE	1	2	3		B	C	E		B	C	E		B	C	E		B	C	E	
PLAY	-9.7	-9.7	-9		-6.3	-6.4	-5.7		0	0	3.2		0	0	3.2		0	0	3.1	
STOP	-9.5	-9.6	-8.9		-6.2	-6.3	-5.6		0	0	3.2		0	0	3.2		0	0	3.1	
Ref No.	QR3821				QR3822				QR3823				QR4302							
MODE	B	C	E		B	C	E		B	C	E		B	C	E					
PLAY	12	0	0		0	0	4.8		11.2	11.2	0		1	0	0					
STOP	12.5	0	0		0	0	4.9		11.9	11.9	0		2.5	2.6	0					
Ref No.	QR4303							QR4306				QR4307				QR4308				
MODE	1	2	3	4	5	6		B	C	E		B	C	E		B	C	E		
PLAY	0	0	12.1	12	3.2	0		0.1	0	4		2.4	12	12		12	0	0		
STOP	0	0	12.7	12.6	3.2	0		2.6	0	0		2.4	12.6	12.6		12.6	0	0		
Ref No.	QR4901							QR4902												
MODE	1	2	3	4	5	6		1	2	3	4	5	6							
PLAY	0	3.2	12.1	12.2	0	0		-9.7	0	12	12.2	12	-9.7							
STOP	0	3.2	12.6	12.7	0	0		-9.6	0	12.6	-9.6	12.6	-9.6							

13.2. MODULE P.C.B.

Ref No.	IC3901																			
MODE	1	2	3	4	5	6	7	8	9	10	11	12	13	14	15	16	17	18	19	20
PLAY	0	0.6	0	0	0	0	0	0	0	3.3	1.5	0	3.3	3.3	0	3.3	3.3	1.3	0	3.3
STOP	1.6	0	0	3.3	3.3	3.3	0	0	0	0	2.7	0	3.2	0	3.3	3.2	0	3.3	1.3	3.3
Ref No.	IC3901																			
MODE	21	22	23	24	25	26	27	28	29	30	31	32	33	34	35	36	37	38	39	40
PLAY	0	0	0	0	0	0	3.3	1.5	0	0	0	1.7	2	0	0	0	0	0	0	0
STOP	0	0	0	0	0	0	0	0	0	0	0	0	2.1	0	0	0	0	0	0	0
Ref No.	IC3901																			
MODE	41	42	43	44	45	46	47	48	49	50	51	52	53	54	55	56	57	58	59	60
PLAY	0	0	3.3	0	3.3	3.3	3.3	1.5	0	3.3	3.3	0	1.5	3.3	1.5	3.3	0	0	0	1.2
STOP	0	0	3.3	0	0	0	0	3.3	1.5	0	3.3	0	1.5	1.5	3.3	0	3.3	1.5	3.3	3.3
Ref No.	IC3901																			
MODE	61	62	63	64	65	66	67	68	69	70	71	72	73	74	75	76	77	78	79	80
PLAY	1.2	0	0	1.2	1.2	2.8	0	3.3	1.9	0	0	3.3	0	0	0	0	0	0	0	0.5
STOP	3.3	3.3	3.3	0	1.2	3.3	1.2	3.3	0	2.8	3.3	0	1.9	2.5	0	0	0	0	0	3.3
Ref No.	IC3901																			
MODE	81	82	83	84	85	86	87	88	89	90	91	92	93	94	95	96	97	98	99	100
PLAY	0	0	0	0	0.9	2.3	3.3	0	0	0	0	0	0	0	0	0	0	0	0	0
STOP	0	0	0	0	0	0	3.3	0	0	0	1.5	1.5	1.5	0	0	0	3.3	0	0	0
Ref No.	IC3901																			
MODE	101	102	103	104	105	106	107	108	109	110	111	112	113	114	115	116	117	118	119	120
PLAY	3.3	1.5	0	0	0	0	0	0	0	0	0	0	0	0	0	0	0	0	0	0
STOP	0	0	0	0	2.6	0	0	0	0	0	1.5	1.5	0	0	0	0	0	0	0	0.5
Ref No.	IC3901																			
MODE	121	122	123	124	125	126	127	128	129	130	131	132	133	134	135	136	137	138	139	140
PLAY	3.3	0	0	0	0	0	0	0	0	0	1.5	0	0	0	0	3.3	0	0	0	0
STOP	0	3.3	0	0	0	0	0	0	0	0	0	0	0	0.3	1.6	0	0	0	0	0
Ref No.	IC3901																			
MODE	141	142	143	144	145	146	147	148	149	150	151	152	153	154	155	156	157	158	159	160
PLAY	0	0	0	0	3.3	1.5	1	0.7	0	0	1	0	2.2	2.2	0	0	0	0	0	1.8
STOP	0	0	0	1.6	0	0	0	0	3.3	1.5	1	2.3	0	0	3.3	1.5	1	0.7	2.3	2.3
Ref No.	IC3901					IC3952														
MODE	161	162	163	164		1	2	3	4	5	6									
PLAY	1.3	1.5	1.7	0		1.3	0.1	8.3	9	0	5.1									
STOP	1.2	1.8	1.4	0		1.3	0	8.3	9	0	5.1									
Ref No.	IC8001																			
MODE	1	2	3	4	5	6	7	8	9	10	11	12	13	14	15	16	17	18	19	20
PLAY	1	1.6	1.6	1.7	0	3.3	1.2	1.3	1	1	1.2	1	1	1.2	0	3.3	0	1.3	0	1.2
STOP	0.8	0.8	0.9	1.1	0	3.3	1	1.3	0.9	0.9	0.7	0.9	0.7	1.2	0	3.3	1	1.9	0	1.2
Ref No.	IC8001																			
MODE	21	22	23	24	25	26	27	28	29	30	31	32	33	34	35	36	37	38	39	40
PLAY	1.2	0.3	1	2.7	1.5	0.9	2.2	1	1.2	0.8	3.3	3.3	0	3.3	3.3	1	2.1	1.9	1.4	1.3
STOP	0.3	0.6	3	1.7	1.3	2.6	1.3	1.6	0.6	0	3	0	3.3	3.3	2.4	2.4	0.9	0.9	2.4	1.2
Ref No.	IC8001																			
MODE	41	42	43	44	45	46	47	48	49	50	51	52	53	54	55	56	57	58	59	60
PLAY	2	1.2	0	1.2	3.3	0	3.3	3.3	0	0	0	3.3	3	3.3	3.3	3.3	0	3.3	3.3	0
STOP	2.2	1.1	0	1.2	3.3	0	0	3.3	0	0	0	3.3	3	3.3	3.3	0	0	3.3	3.3	0
Ref No.	IC8001																			
MODE	61	62	63	64	65	66	67	68	69	70	71	72	73	74	75	76	77	78	79	80
PLAY	3.2	1.6	3.3	0	0	1.8	1.6	0	3.3	3.3	0	0	0	0	0	0	0	0	0	0
STOP	3.3	1.6	0	0	0	1.7	1.6	0	0	3.3	0	3.3	3.3	0	3.3	0	0	0	0	0
Ref No.	IC8001																			
MODE	81	82	83	84	85	86	87	88	89	90	91	92	93	94	95	96	97	98	99	100
PLAY	0	0	1.2	0	0.9	2.3	0	1.8	0	0.1	0	3.2	2	2	0	1.8	1.6	1.6	1.6	1.6
STOP	0	0	1.2	3.2	0.9	0	0	1.8	0	0.1	1.8	3.2	2.1	2	1.8	1.8	1.6	1.6	1.6	1.6
Ref No.	IC8001																			
MODE	101	102	103	104	105	106	107	108	109	110	111	112	113	114	115	116	117	118	119	120
PLAY	1.9	1.4	0.2	0.1	0.2	2.1	3.2	0	2.2	1.6	2.5	0	2.3	2.3	2.3	2.3	3.2	0	3.2	0
STOP	1.9	1.4	0	0.1	0	0.1	3.2	0	2.2	1.6	2.2	2.2	0	2.2	2.2	2.2	3.2	0	3.2	0
Ref No.	IC8001																			
MODE	121	122	123	124	125	126	127	128	129	130	131	132	133	134	135	136	137	138	139	140
PLAY	1.8	2.5	1.6	1.7	0	1.6	1.7	3.3	0.8	0.9	0.4	3.3	2.2	0	1.1	2.2	0	0.4	0.9	0
STOP	2	1.6	1.6	1.6	0	1.6	1.6	3.3	0.8	0.9	0.4	3.2	2.2	1	1	2.2	0	1.4	0.8	0
Ref No.	IC8001																			
MODE	141	142	143	144	145	146	147	148	149	150	151	152	153	154	155	156	157	158	159	160
PLAY	3.3	3.3	0	1.6	0	1.6	3.2	0	0	0	0	1.6	0	3.3	0	1.6	0	1.2	3	3.1
STOP	3.3	3.3	0	1.6	0	1.6	3.2	0	0	0	0	1.6	0	3.3	0	1.6	0	1.2	3	3.1
Ref No.	IC8001																			
MODE	161	162	163	164	165	166	167	168	169	170	171	172	173	174	175	176	177	178	179	180
PLAY	2.8	3.1	2.9	3	0	3.3	3.1	3	3	3.2	3	3	0	3.3	3.1	3	3.1	2.9	2.9	2.8
STOP	2.9	3.2	2.9	3.1	0	3.3	3.1	3.1	3	3.3	3.1	3	0	3.3	3.2	3	3.1	2.9	2.9	0
Ref No.	IC8001																			
MODE	181	182	183	184	185	186	187	188	189	190	191	192	193	194	195	196	197	198	199	200
PLAY	3.2	0	1.6	3.3	1.6	0	1.2	3.2	0	3.2	3.2	0	0	0	0	3.3	3.3	0	0	1.5
STOP	3.2	0	1.6	3.2	1.6	0	1.2	3.2	3.2	3.1	3.2	0	2.4	0	0	3.3	1.6	0	0	1.6
Ref No.	IC8001																			
MODE	201	202	203	204	205	206	207	208	209	210	211	212	213	214	215	216	217	218	219	220
PLAY	0	1.8	0	0	3.2	0	0.2	1.4	1.5	0	1.2	1.4	2.6	2.6	1.5	1.4	0	1.2	0	3.3
STOP	0.1	0	0.3	0	3.3	1.6	0.3	1.5	0.6	0	1.2	1.6	2.7	2.6	1.2	1.1	1.6	0	0	0
Ref No.	IC8001																			
MODE	221	222	223	224	225	226	227	228	229	230	231	232	233	234	235	236	237	238	239	240
PLAY	1.2	0	0	0.5	0.2	0	0.5	0.5	1.8	1.2	0	1.2	3.3	0.3	1.2	0	0	0	3.3	1.5
STOP	3.2	0	0	1.4	0	0	0	0	3.3	0	0	1.6	0	3.3	1.6	1.2	0	0	1.2	1.4
Ref No.	IC8001																			
MODE	241	242	243	244	245	246	247	248	249	250	251	252	253	254	255	256				
PLAY	0.9	3.3	0	1.5	0	0	0.3	1	0	0	0.5	3.3	1.2	0	0	0				
STOP	1.6	0	1.6	0	0	3.3	1.2	0	0	0	0	0	3.3	1.2	0	0				
Ref No.	IC8051																			
MODE	1	2	3	4	5	6	7	8	9	10	11	12	13	14	15	16	17	18	19	20
PLAY	3.3	0	0	3.1	0	0	3	0	3.3	0	3	0	0	3.3	0	3.3	3.3	3.2	2.2	1.4
STOP	0	3.2	3.3	0	3.1	0	3.2	0	3.3	0	3	0	0	0	3.3	0	0	0	0	0

Ref No.	IC8051																			
MODE	21	22	23	24	25	26	27	28	29	30	31	32	33	34	35	36	37	38	39	40
PLAY	0	0	0	0	0	1.5	2.7	0	0	0	0	1.5	0	0	0	3.3	0	2.9	0	0
STOP	0	0	0	0	0	0	0	0	0	1.6	0	0	0	0	0	3.3	1.6	0	0	0
Ref No.	IC8051																			
MODE	41	42	43	44	45	46	47	48	49	50	51	52	53	54						
PLAY	0	0	0	0	3	0	3	0	0	0	2.8	0	0	0						
STOP	3.2	3.3	3.2	0	0	3	0	0	0	1.8	1.2	0	0	0						
Ref No.	IC8111									IC8151										
MODE	1	2	3	4	5	6	7	8		1	2	3	4	5						
PLAY	3.3	0	0	1.9	4.7	0	0	5		3	5	1.2	1.2	0						
STOP	0	0	0	0	3.2	3.3	0	0		3	5	1.2	1.2	0						
Ref No.	IC8251																			
MODE	1	2	3	4	5	6	7	8	9	10	11	12	13	14	15	16	17	18	19	20
PLAY	0	1.6	3.3	3.3	1.7	0	0	9	4.3	4.2	4.3	4	3.6	4.9	2.5	2.3	2.5	0.3	4	0
STOP	3.3	1.6	0	0	1.2	0	0	9	0	4.3	0	4.3	3.9	3.9	2.5	2.5	2.5	0	0	9
Ref No.	IC8251																			
MODE	21	22	23	24	25	26	27	28												
PLAY	0	0	1.7	0	2.2	2.2	2	1.6												
STOP	5	1.6	1.9	0	2	1.6	1.7	1.6												
Ref No.	IC8421																			
MODE	1	2	3	4	5	6	7	8	9	10	11	12	13	14	15	16	17	18	19	20
PLAY	0	0	2.9	3.3	1.6	0	0	0	0	0	0	0	0	0	2.4	2.4	4.9	0	2.4	2.3
STOP	0	0	0	0	1.6	0	1.7	0	4.9	0	0	0	0	0	2.4	2.4	4.9	0	2.4	2.4
Ref No.										IC8601						IC8606				
MODE	21	22	23	24	25	26	27	28		1	2	3	4		1	2	3	4	5	
PLAY	2.4	2.4	4.9	0	2.4	2.4	2.4	0		3.3	1	0	0		3.3	3.4	0	0	0	
STOP	2.4	2.4	4.9	0	2.5	2.4	0	0		3.3	1.2	0	0		0	3.3	0	0	0	
Ref No.	IC8611																			
MODE	1	2	3	4	5	6	7	8												
PLAY	0	0	0	0	3.2	0	0	3.4												
STOP	0	0	0	0	3.2	3.3	0	3.3												
Ref No.	IC8651																			
MODE	1	2	3	4	5	6	7	8	9	10	11	12	13	14	15	16	17	18	19	20
PLAY	1.3	0.4	0	0	0	0	0	0	0	0	0	0	0	0	1.7	0	0	0	0	0
STOP	1.2	0.3	0	2.2	1	1.2	0	2.4	0	1.4	0	3.3	3.3	3.3	3.3	1.8	2.2	0	0	2.1
Ref No.	IC8651																			
MODE	21	22	23	24	25	26	27	28	29	30	31	32	33	34	35	36	37	38	39	40
PLAY	0	3.3	3.3	3.3	0	0	0	3.3	0	3.3	3.3	3.3	0	0	0	3.3	0	3.3	0	1.5
STOP	0	1.8	2.3	2.6	1.3	0	0	0	1	1	1	1	0.9	1	0.9	3.3	3.3	1	0.9	1
Ref No.	IC8651									IC8701						IC8901				
MODE	41	42	43	44	45	46	47	48		1	2	3	4	5		1	2	3	4	5
PLAY	1.2	0	0	0	0	0	0	3.3		0	1.6	0	0	3.3		3.3	3.3	0	3.3	0
STOP	0.9	1	1	1	0.9	0	3.3	3.2		0	1.6	0	0	3.3		3.3	0	0	3.3	3.3
Ref No.	Q3901				Q3902				Q3903				Q8551				Q8552			
MODE	B	C	E		B	C	E		B	C	E		B	C	E		B	C	E	
PLAY	4.2	0	0		5.1	3.3	3.3		5	3.4	3.3		5	0	0		0	5	5	
STOP	2.1	0	-1.3		5	3.3	3.3		5	3.4	3.4		5	0	0		0	5	5	
Ref No.	Q8561				Q8562				QR8111							QR8420				
MODE	B	C	E		B	C	E		1	2	3	4	5	6		B	C	E		
PLAY	3.7	1.3	1.9		2.3	4.4	3.7		0	0	1.3	0	0	4.7		0	0	3.3		
STOP	5	0	0		0	5	5		0	0	1.2	0	0	4.7		0	0	3.3		
Ref No.	QR8571																			
MODE	B	C	E																	
PLAY	3.3	3.3	0																	
STOP	-2	3.3	3.3																	

14 BLOCK DIAGRAM

Note:

Circuit voltage and waveform described herein shall be regarded as reference information when probing defect point, because it may differ from an actual measuring value due to difference of measuring instrument and its measuring condition and product itself.

14.1. OVERALL BLOCK DIAGRAM

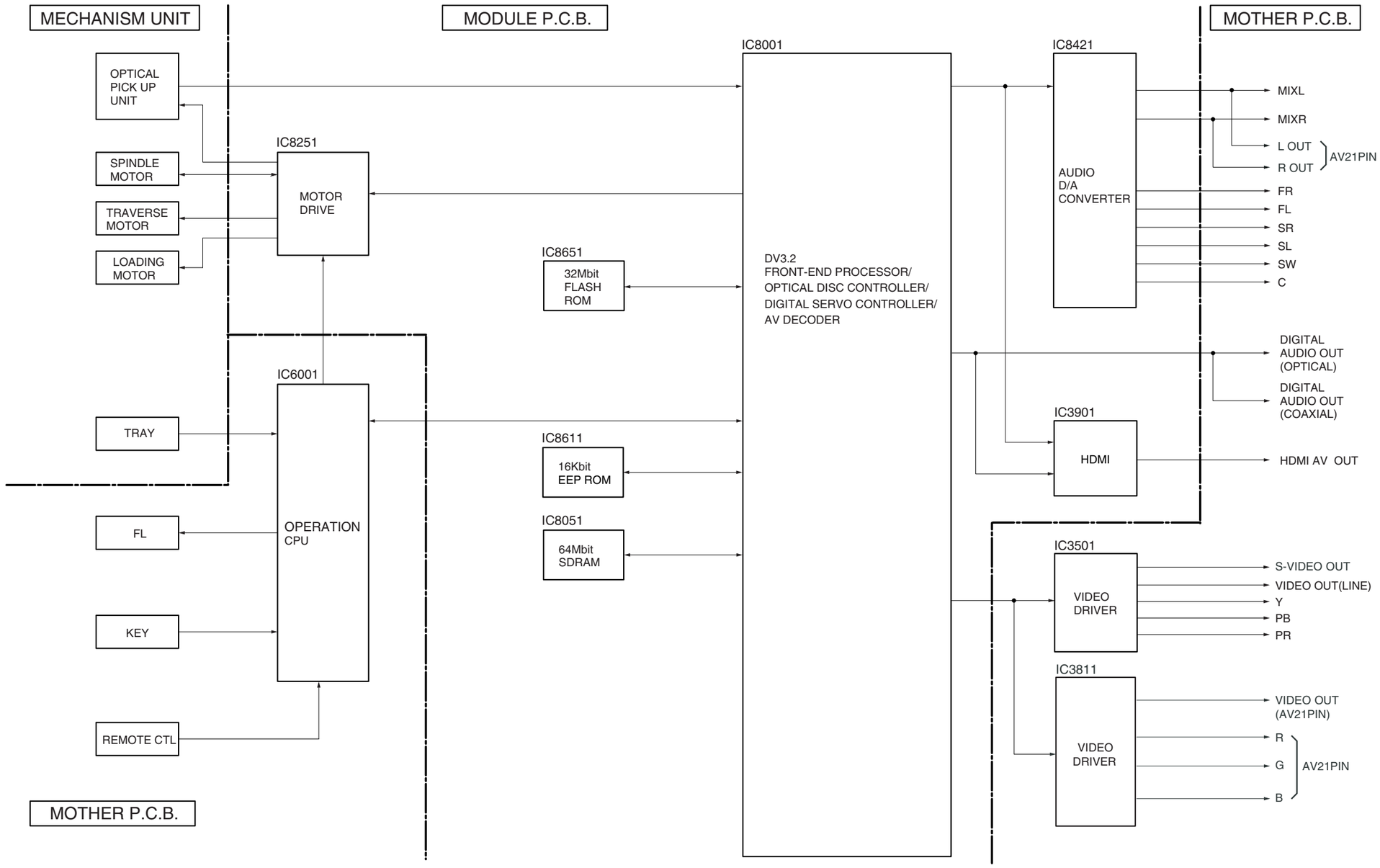

DVD-S52E/EB/EG
OVERALL BLOCK DIAGRAM

14.2. POWER SUPPLY BLOCK DIAGRAM

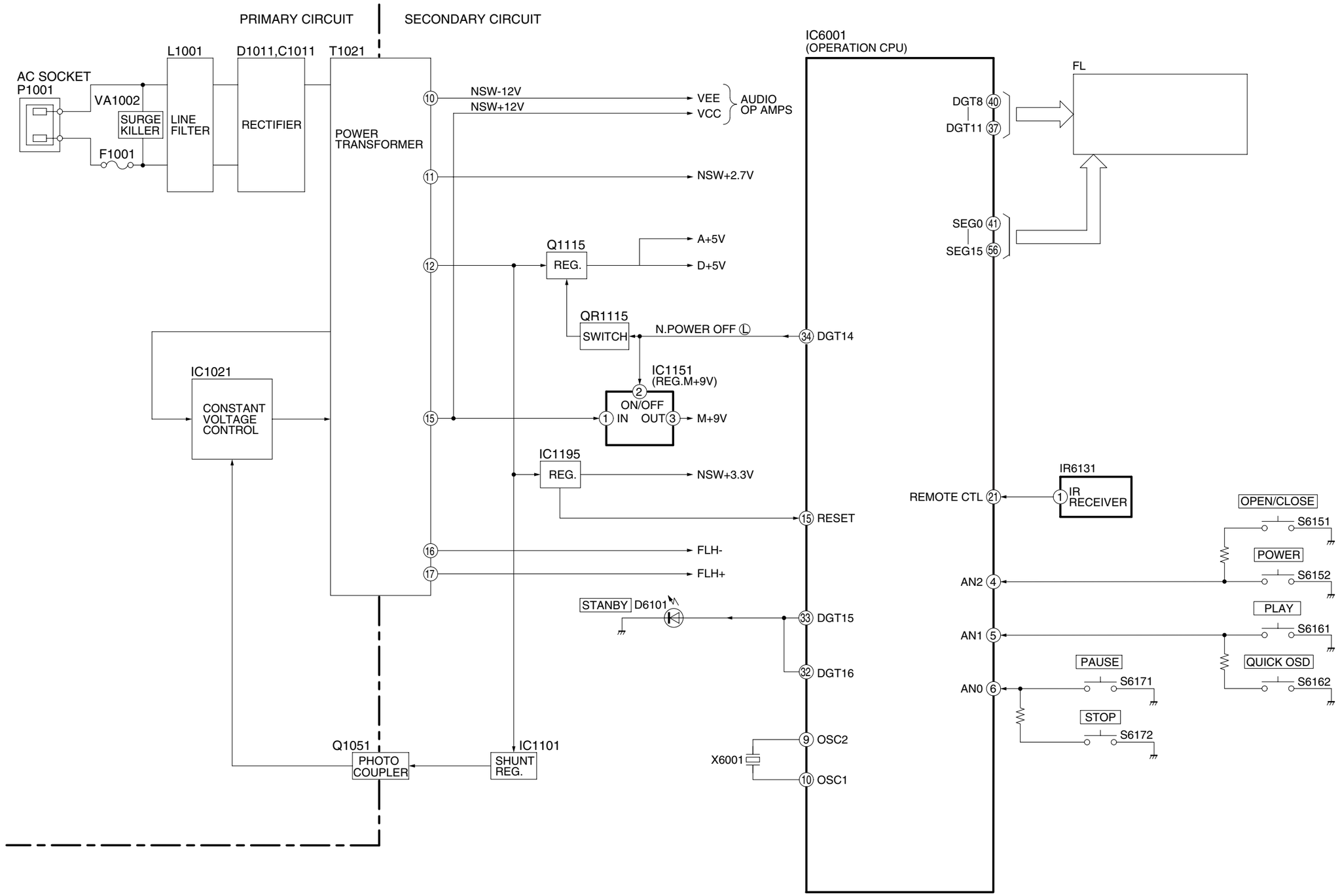

DVD-S52E/EB/EG
POWER SUPPLY BLOCK DIAGRAM

14.3. SERVO BLOCK DIAGRAM

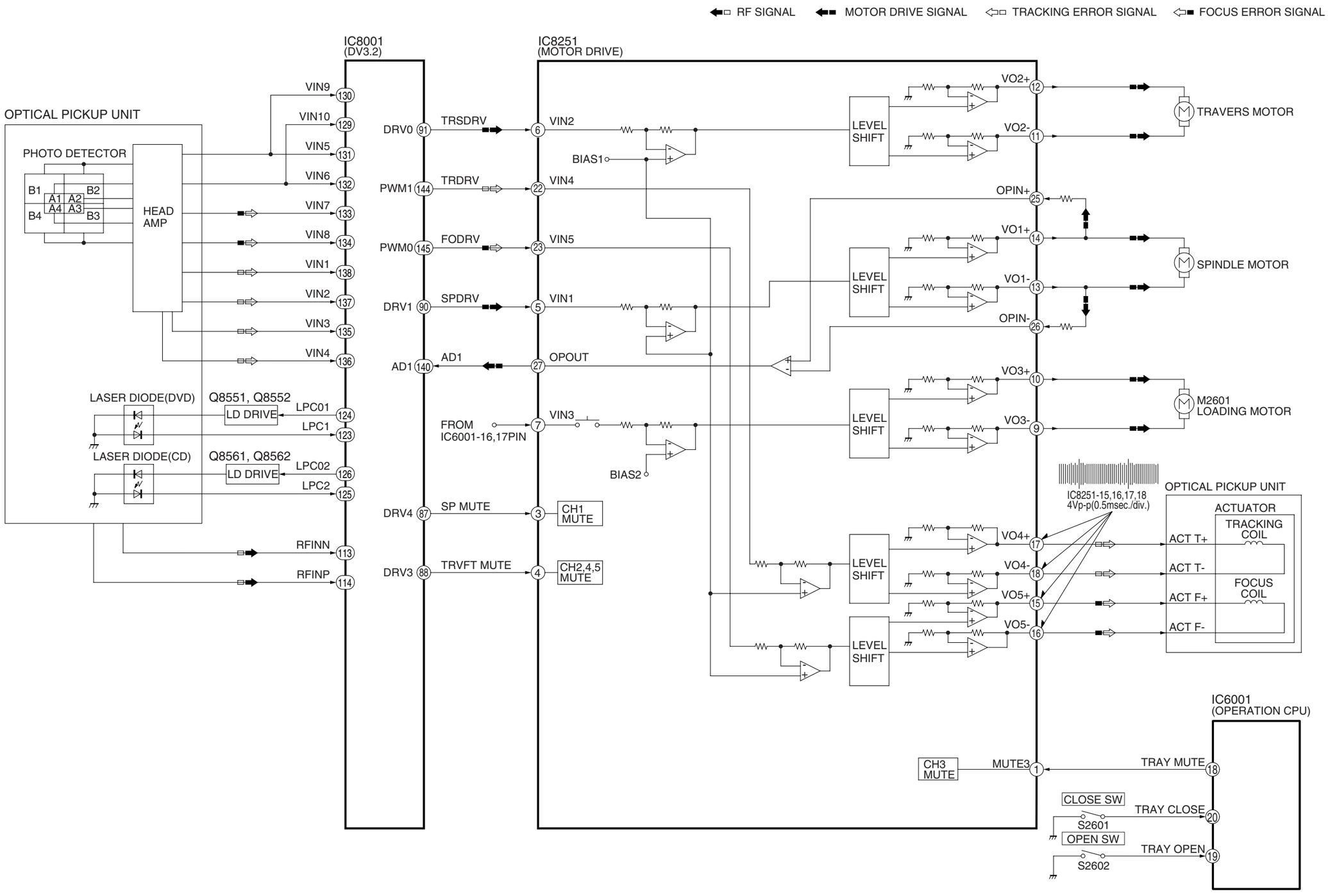

DVD-S52E/EB/EG
SERVO BLOCK DIAGRAM

14.4. VIDEO BLOCK DIAGRAM

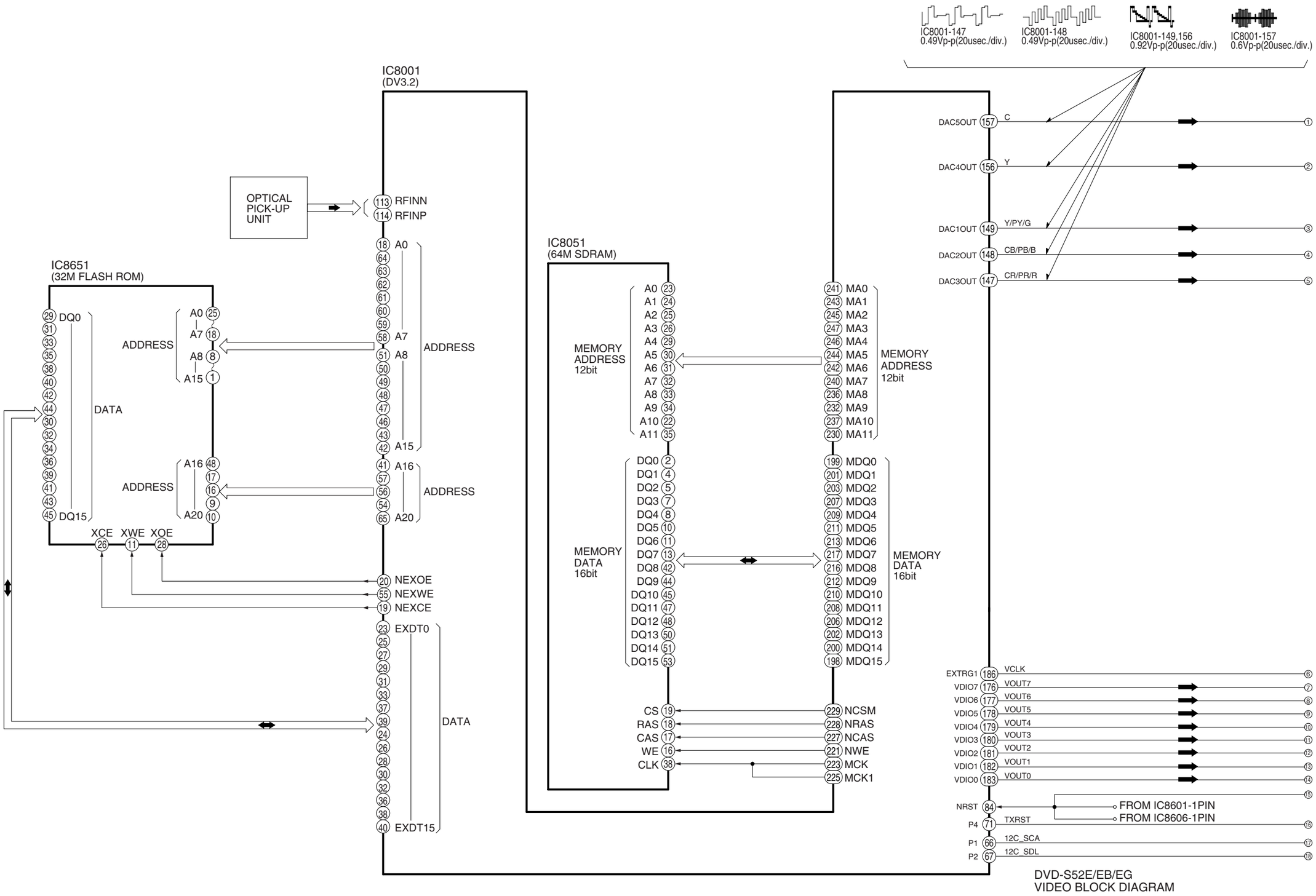

DVD-S52E/EB/EG
VIDEO BLOCK DIAGRAM

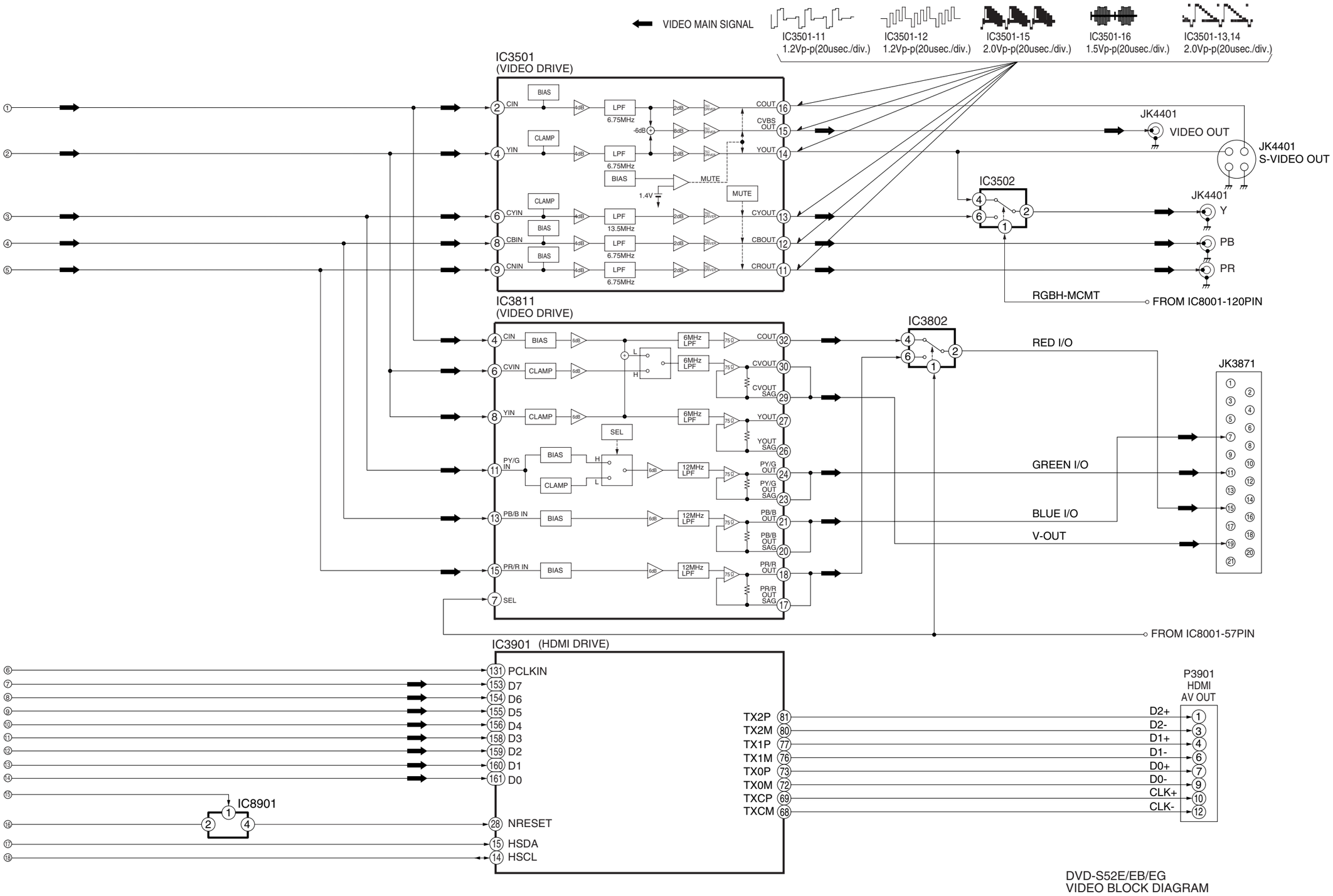

DVD-S52E/EB/EG
VIDEO BLOCK DIAGRAM

14.5. AUDIO BLOCK DIAGRAM

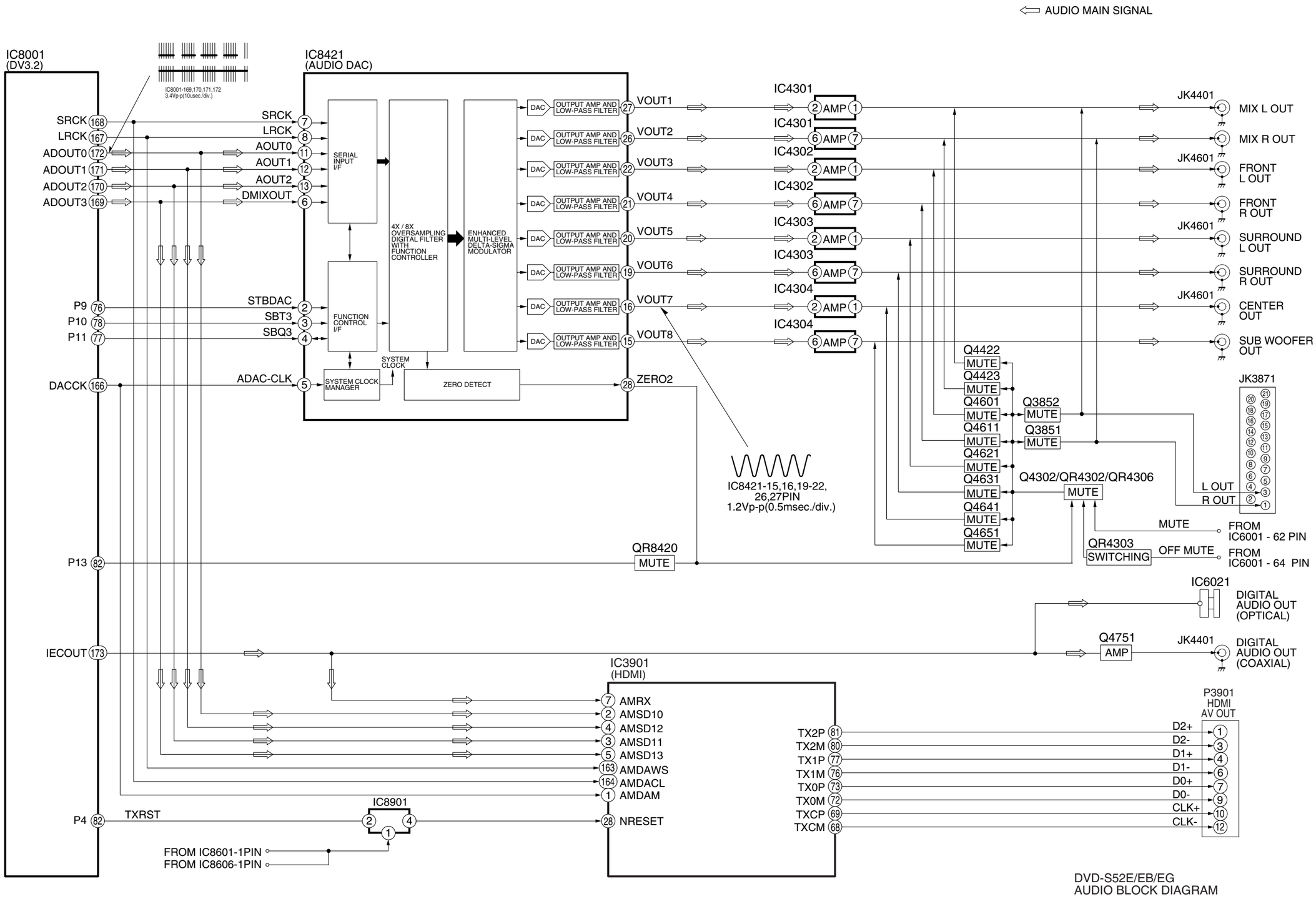

DVD-S52E/EB/EG
AUDIO BLOCK DIAGRAM

15 INTERCONNECTION SCHEMATIC DIAGRAM & SCHEMATIC DIAGRAM NOTES

15.1. INTERCONNECTION SCHEMATIC DIAGRAM

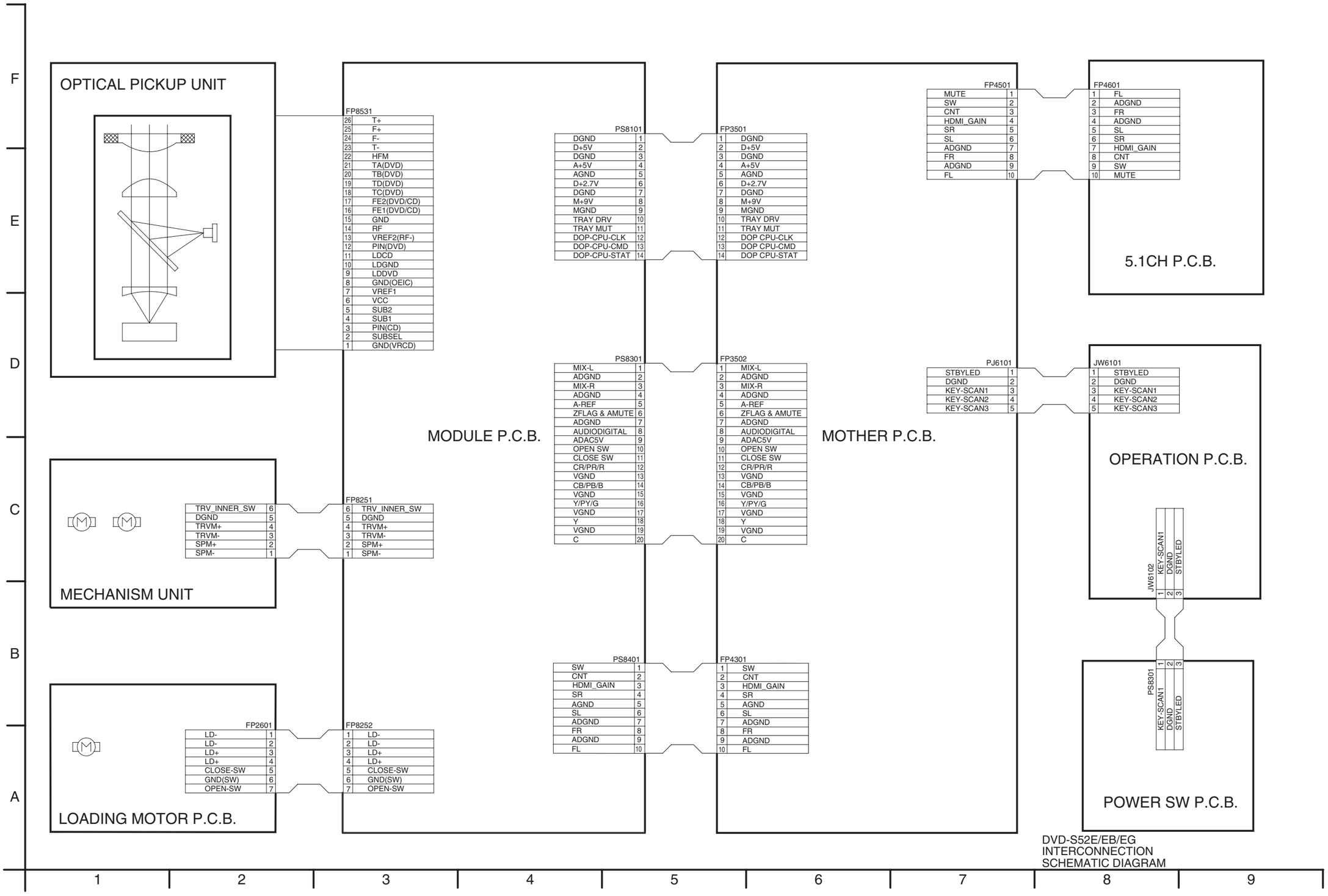

DVD-S52E/EB/EG
INTERCONNECTION
SCHEMATIC DIAGRAM

15.2. SCHEMATIC DIAGRAM NOTES

This schematic diagram may be modified at any time with the development of new technology.

Important safety notice:

Components identified by ⚠ mark have special characteristics important for safety.

Furthermore, special parts which have purpose of fire-retardant (resistors), high-quality sound (capacitors), low-noise (resistors), etc. are used. When replacing any of components, be sure to use only manufacture´s specified parts shownin theparts list.

Important safety notice:

There are special components used in this equipment which are important for safety.

These parts are marked by ⚠ in the schematic diagrams. It is essential that these critical parts should be replaced with manufacturer's specified parts to prevent shock, fire, or other hazards. Do not modify the original designwithout permission of manufacturer.

Caution!

IC and LSI are sensitive to static electricity.

Secondary trouble can be prevented by taking care during repair.

Cover the parts boxes made of plastics with aluminum foil.

Ground the soldering iron.

Put a conductive mat on the work table.

Do not touch the legs of IC or LSI with the fingers directly.

16 SCHEMATIC DIAGRAM

16.1. POWER SUPPLY SECTION (MOTHER P.C.B. (1 / 2)) SCHEMATIC DIAGRAM

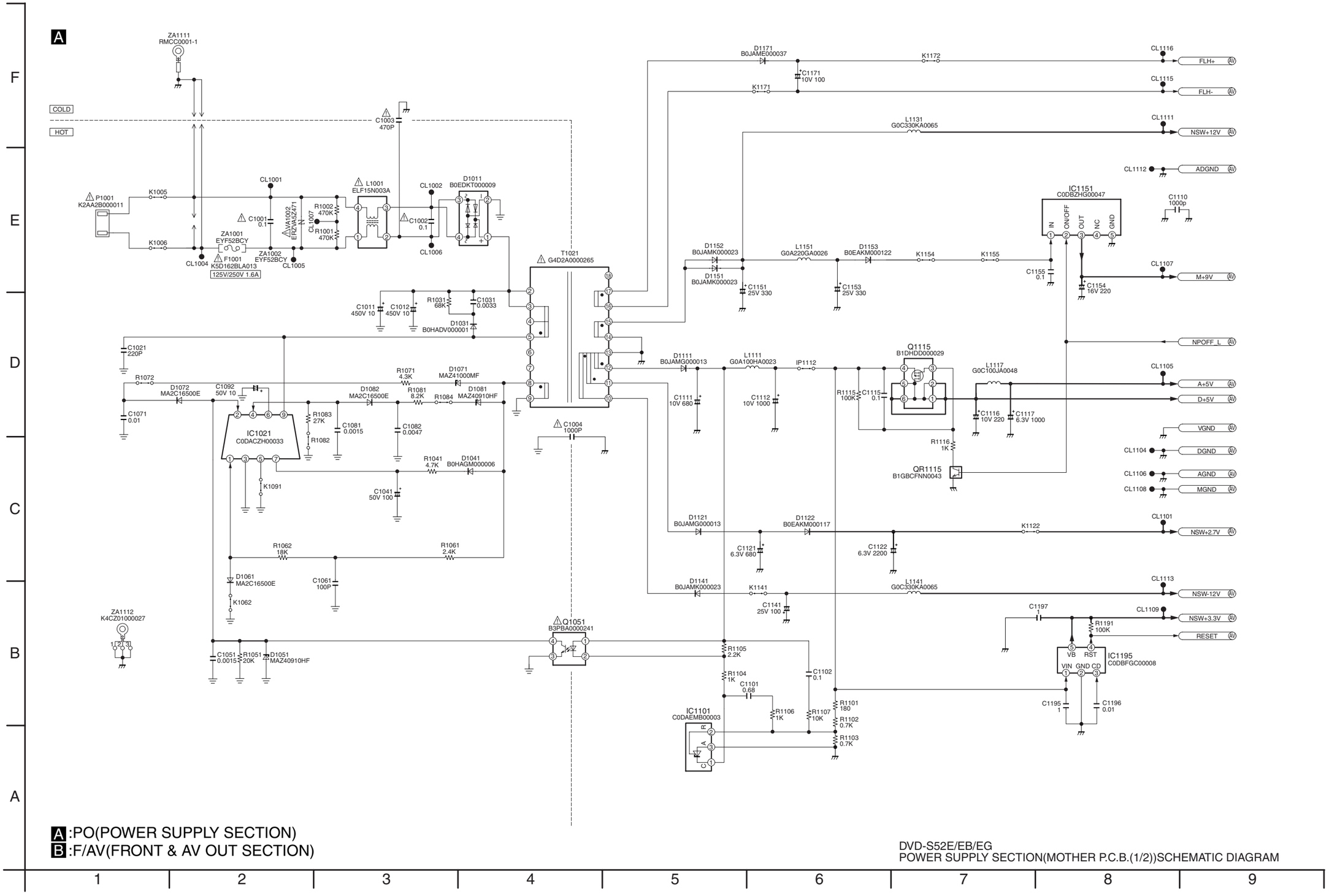

A :PO(POWER SUPPLY SECTION)
B :F/AV(FRONT & AV OUT SECTION)

DVD-S52E/EB/EG
POWER SUPPLY SECTION(MOTHER P.C.B.(1/2))SCHEMATIC DIAGRAM

16.2. FRONT & AV OUT SECTION (MOTHER P.C.B. (2 / 2)) SCHEMATIC DIAGRAM

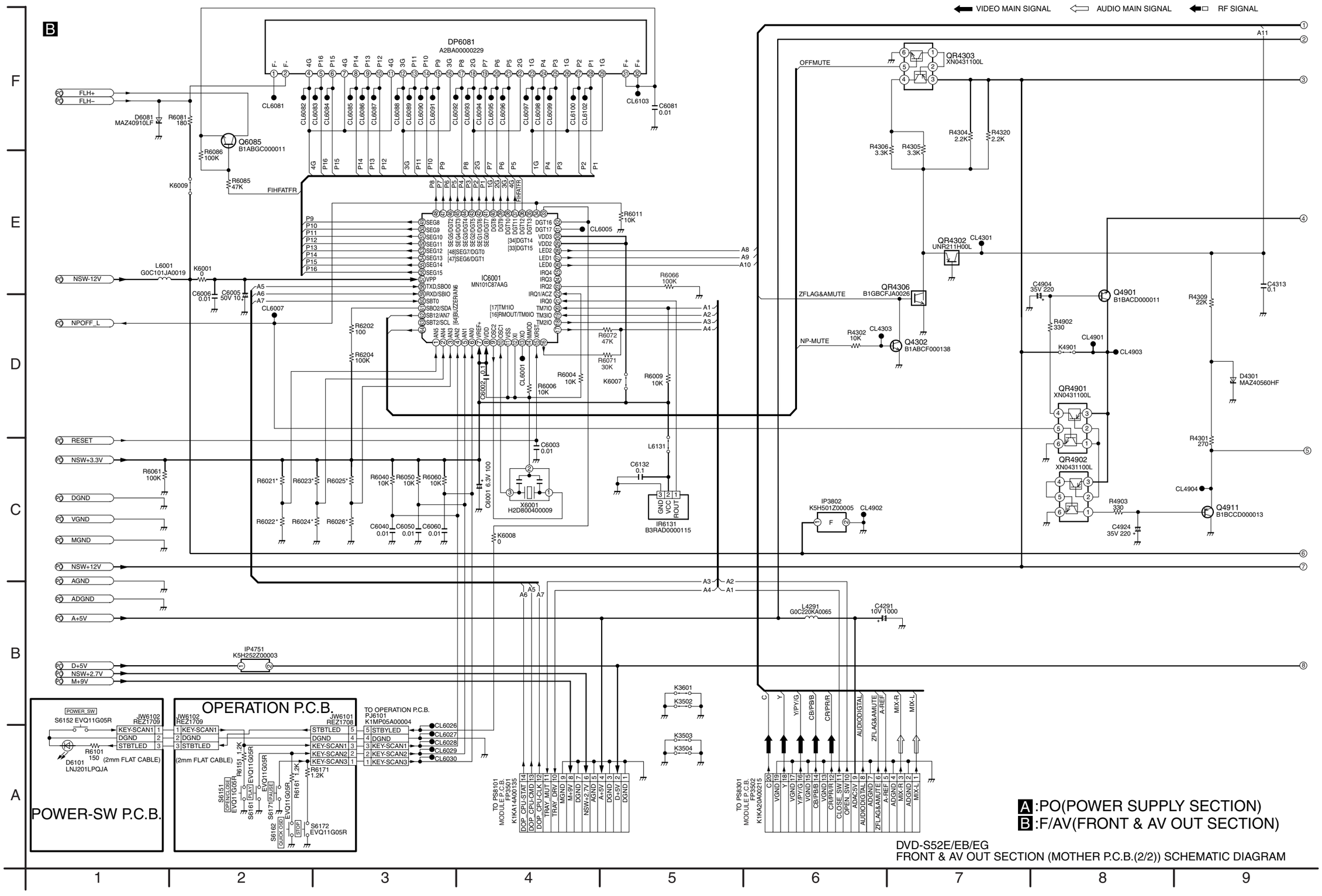

DVD-S52E/EB/EG
FRONT & AV OUT SECTION (MOTHER P.C.B.(2/2)) SCHEMATIC DIAGRAM

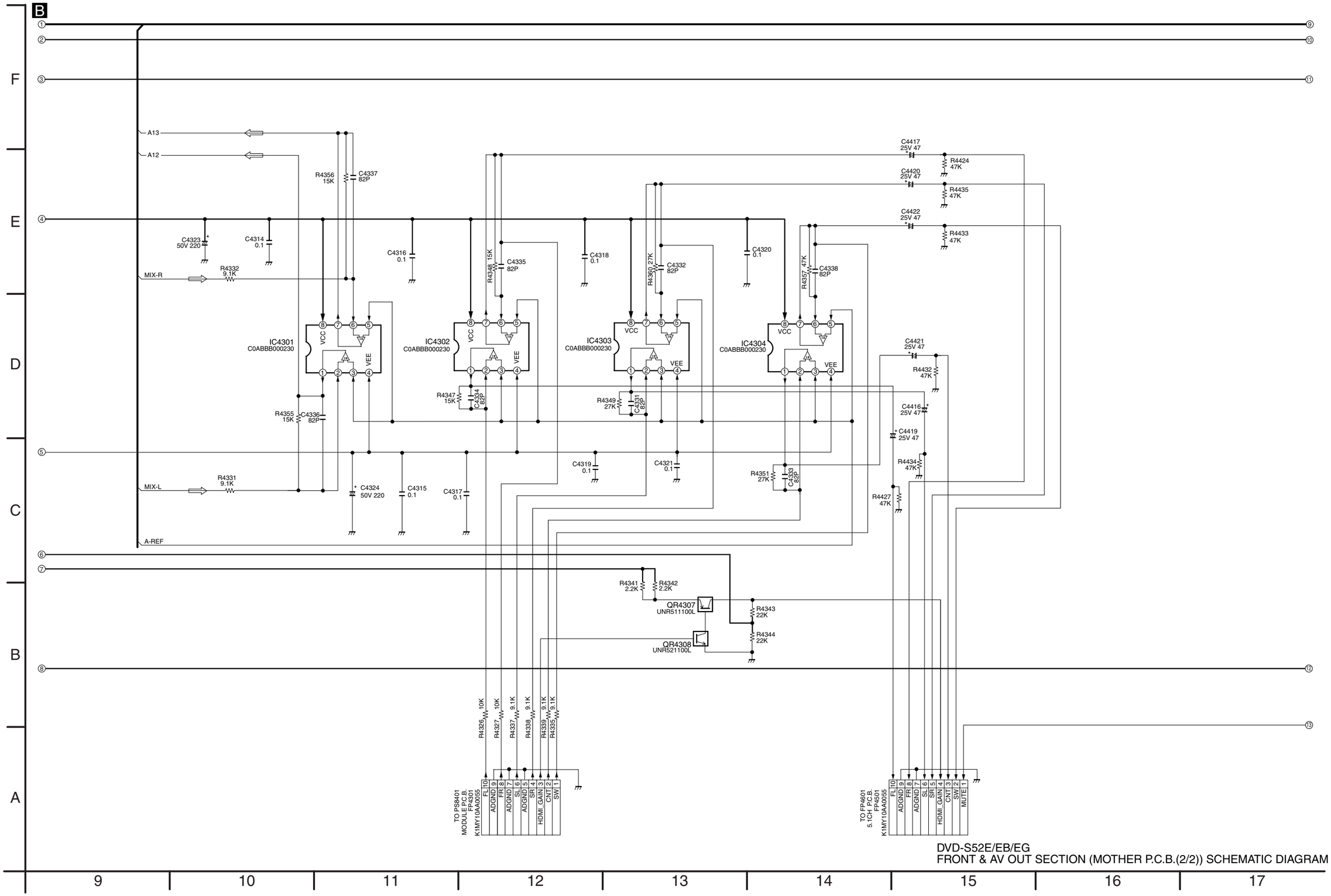

DVD-S52E/EB/EG
FRONT & AV OUT SECTION (MOTHER P.C.B.(2/2)) SCHEMATIC DIAGRAM

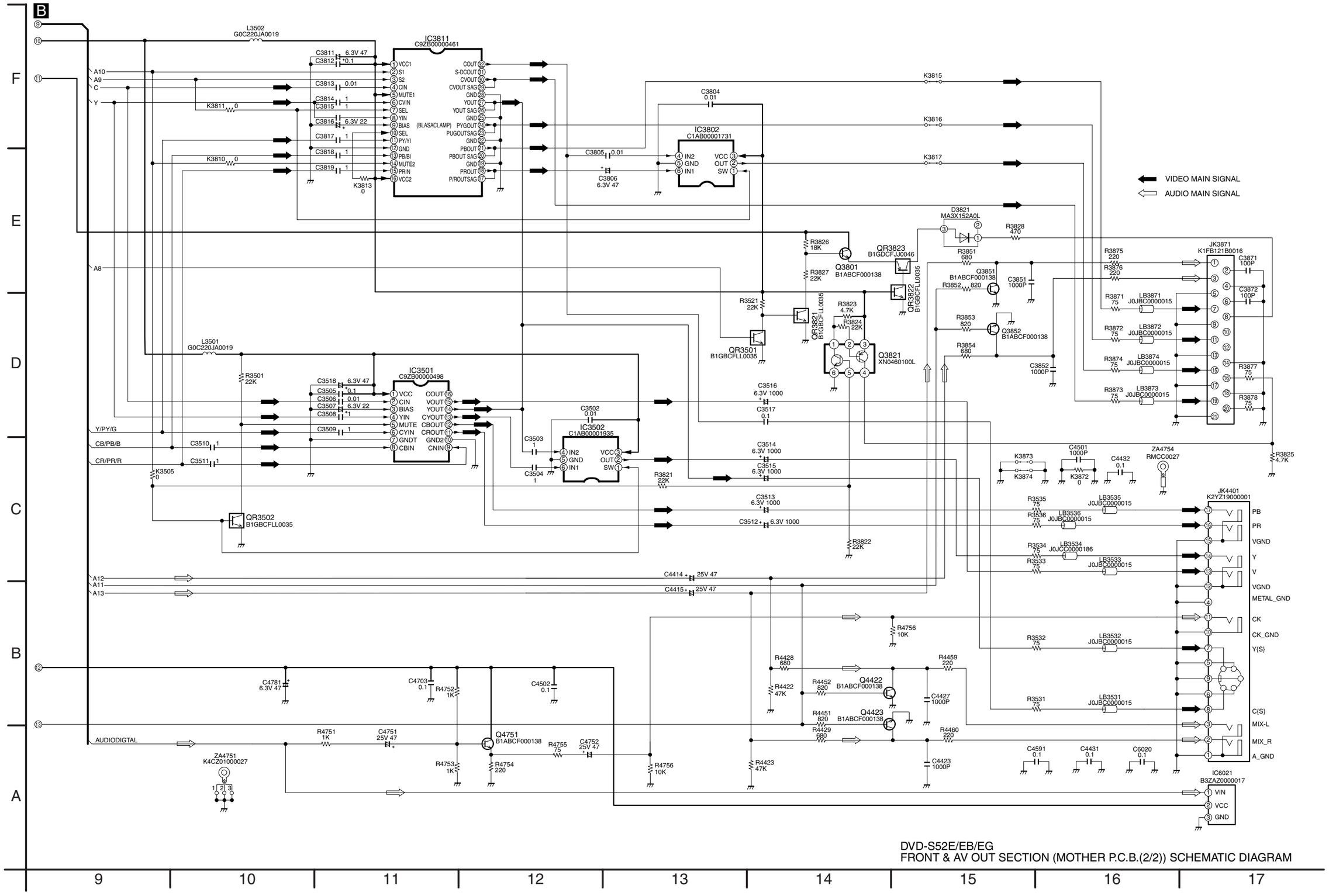

DVD-S52E/EB/EG
FRONT & AV OUT SECTION (MOTHER P.C.B.(2/2)) SCHEMATIC DIAGRAM

16.3. MODULE SCHEMATIC DIAGRAM

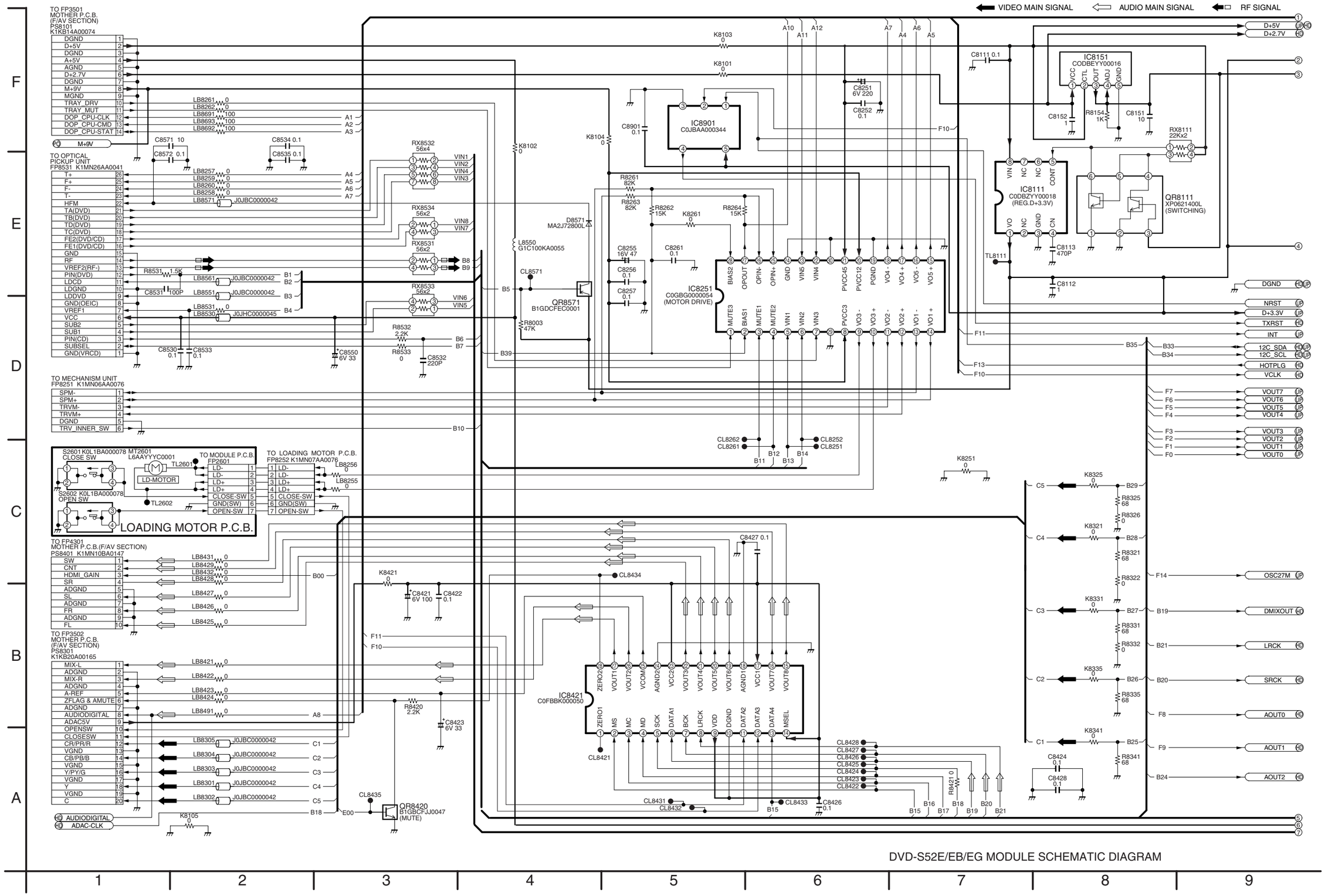

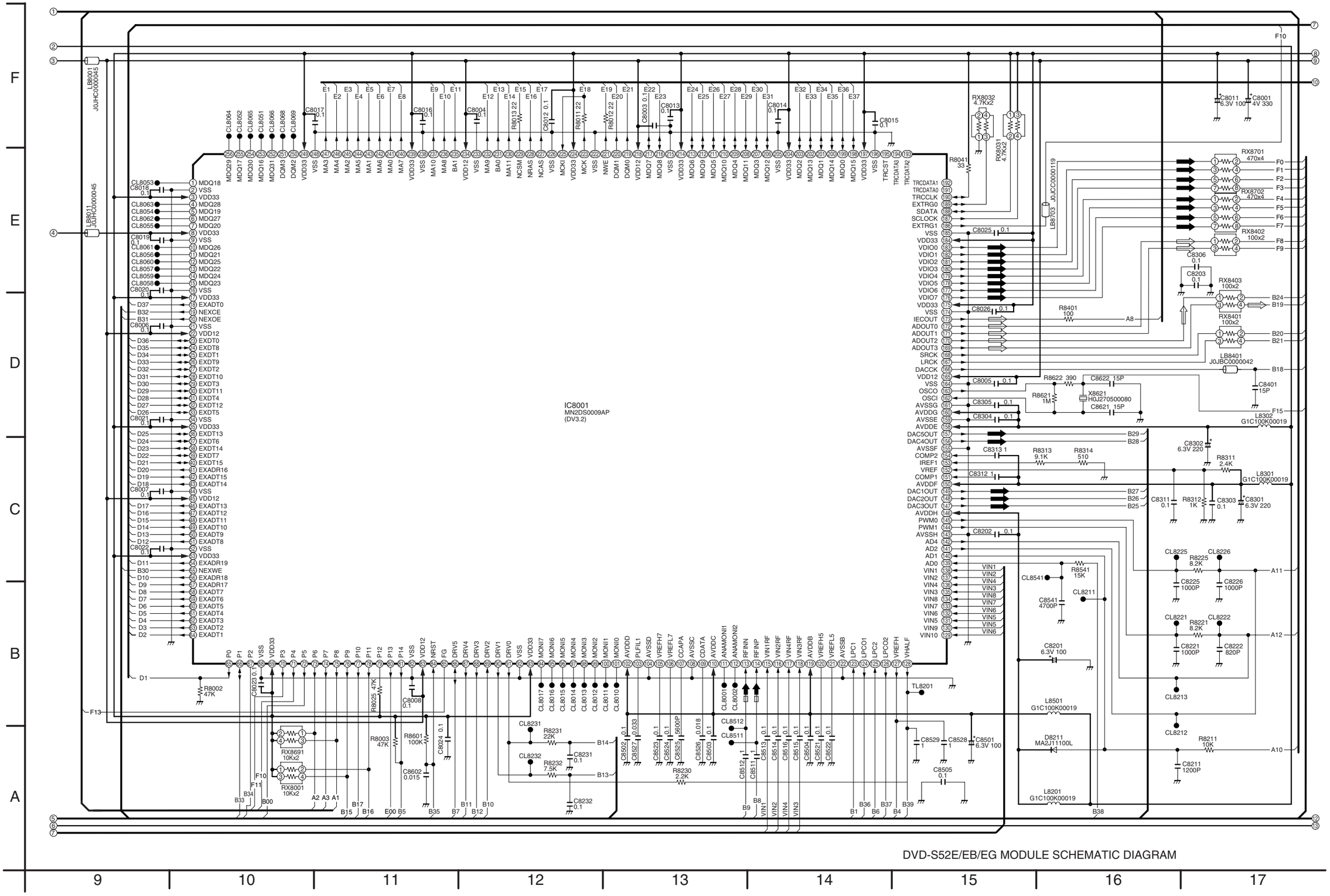

DVD-S52E/EB/EG MODULE SCHEMATIC DIAGRAM

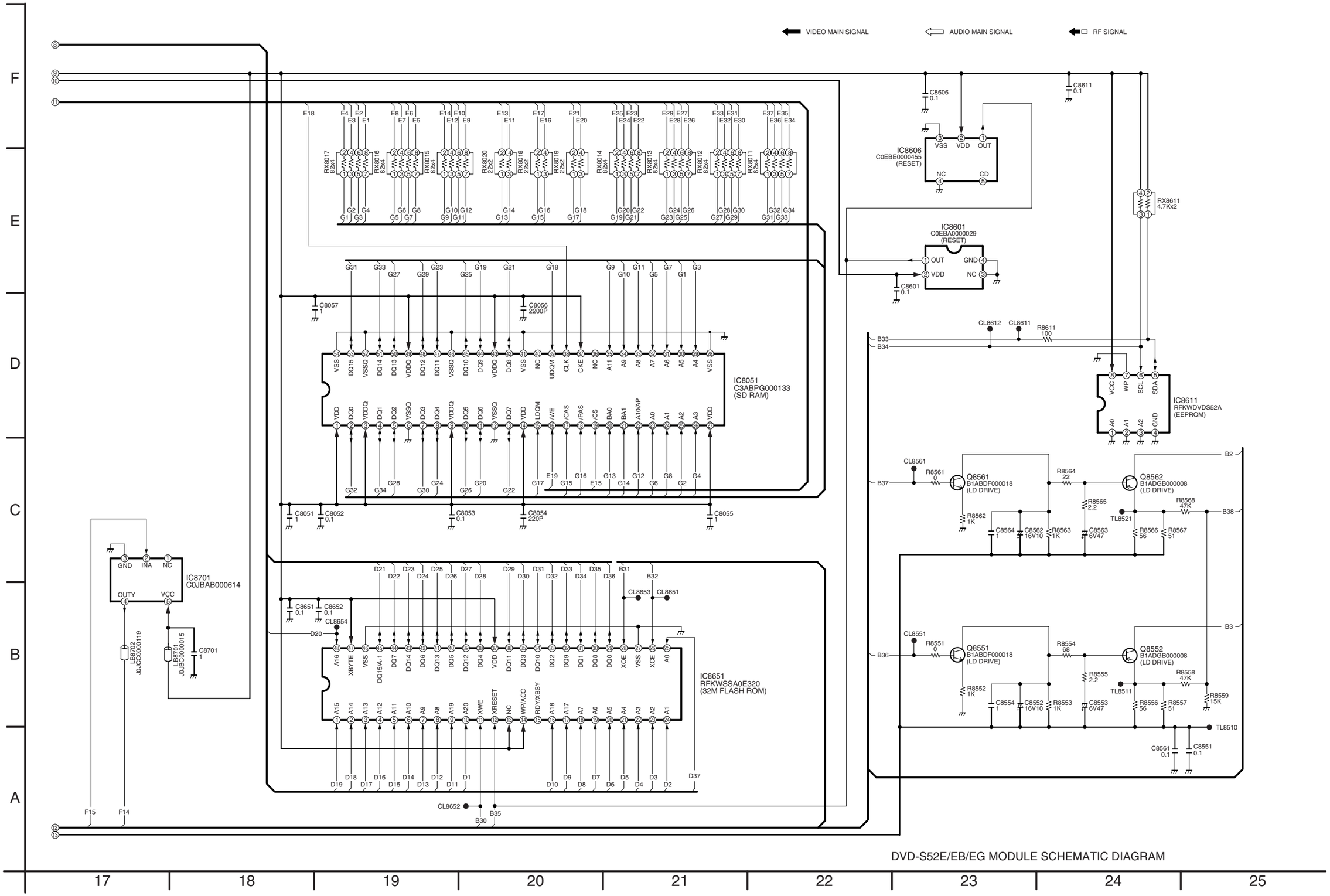
VIDEO MAIN SIGNAL
AUDIO MAIN SIGNAL
RF SIGNAL
IC8051
C3ABPG000133
(SD RAM)
IC8651
RFKWSSA0E320
(32M FLASH ROM)
IC8701
C0JBAB000614
IC8606
C0EBE0000455
(RESET)
IC8601
C0EBA0000029
(RESET)
IC8611
RFKWDVDS52A
(EEPROM)
Q8561
B1ABDF000018
(LD DRIVE)
Q8562
B1ADGB000008
(LD DRIVE)
Q8551
B1ABDF000018
(LD DRIVE)
Q8552
B1ADGB000008
(LD DRIVE)
DVD-S52E/EB/EG MODULE SCHEMATIC DIAGRAM

16.4. HDMI SCHEMATIC DIAGRAM

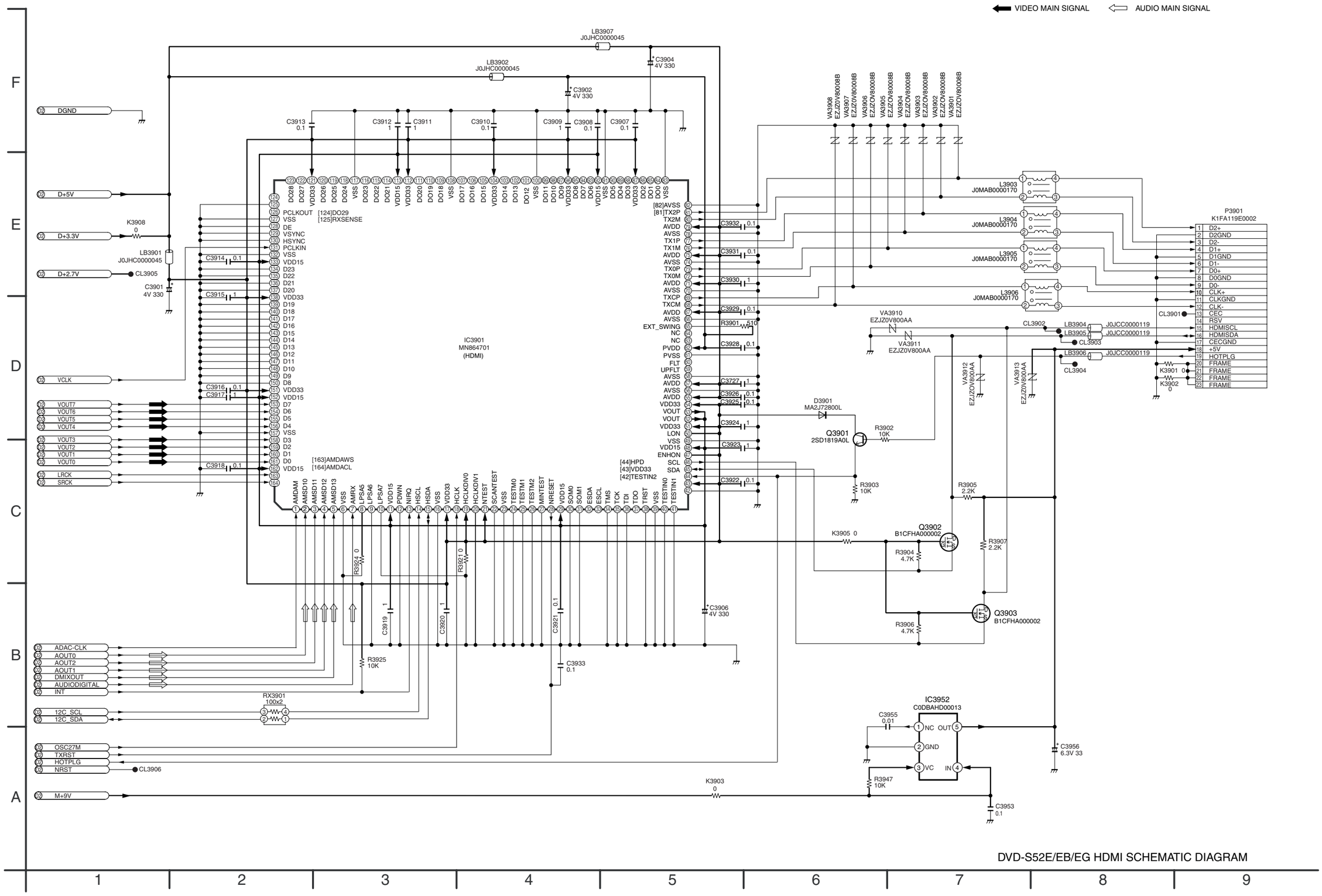

DVD-S52E/EB/EG HDMI SCHEMATIC DIAGRAM

16.5. 5.1CH SCHEMATIC DIAGRAM

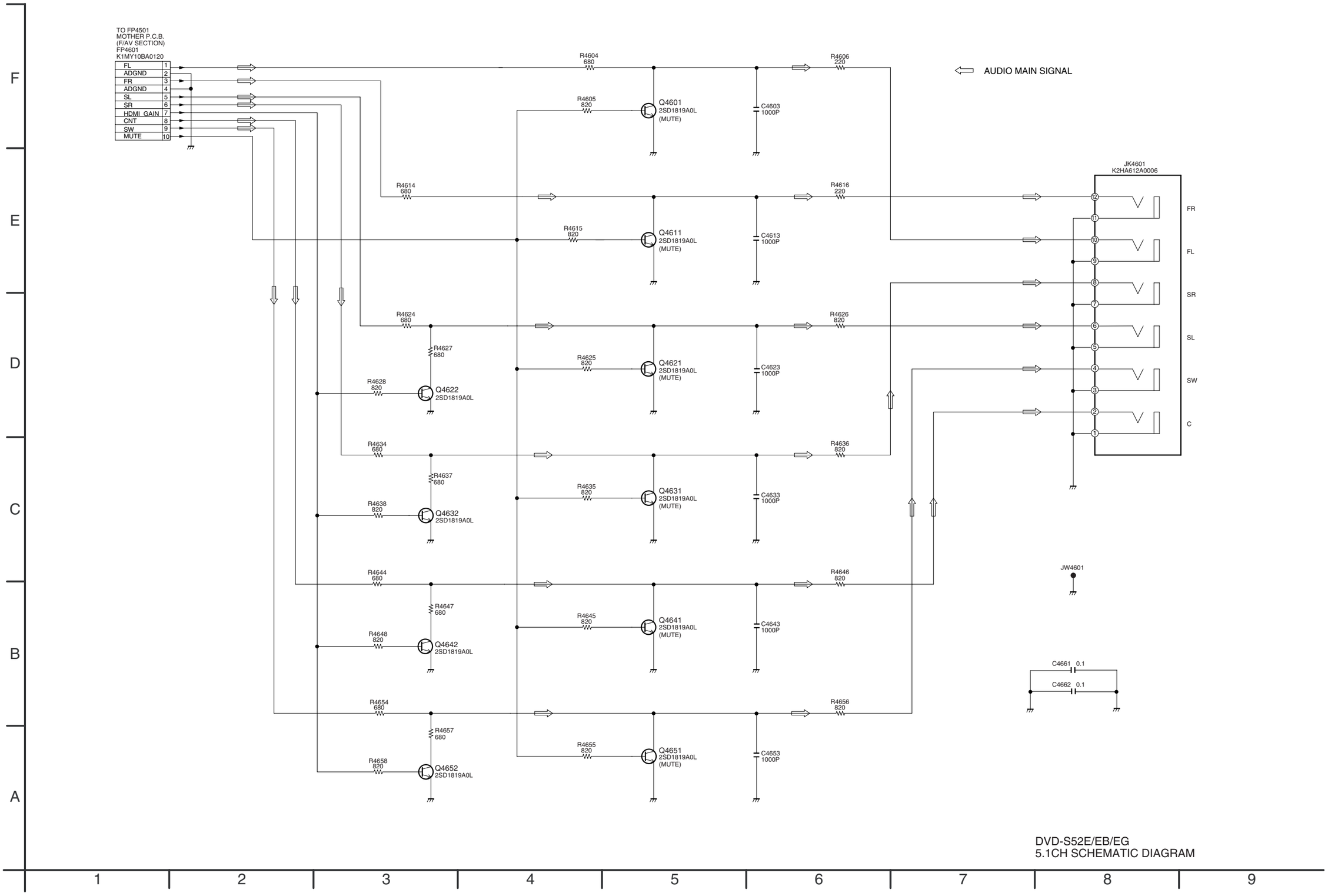

17 PRINT CIRCUIT BOARD

17.1. MOTHER P.C.B.

MOTHER P.C.B.

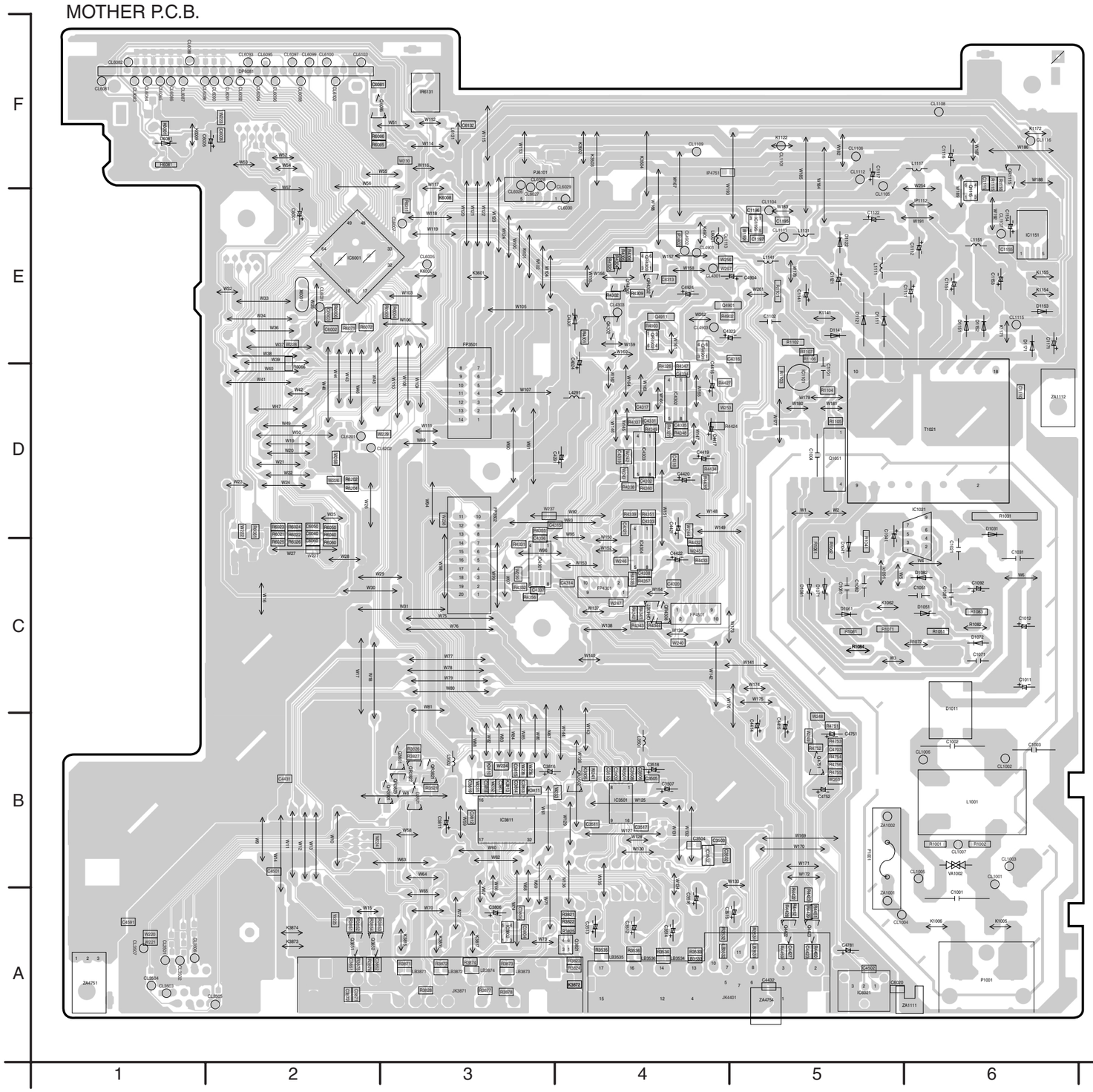

OPERATION P.C.B.

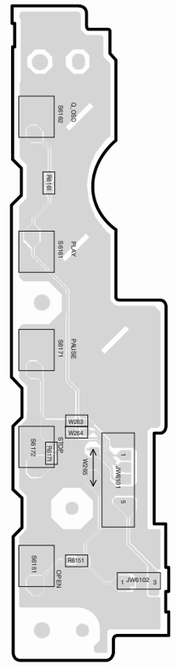

POWER SW P.C.B.

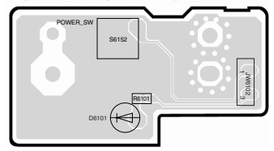

5.1 CH P.C.B.

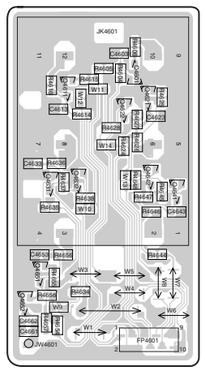

DVD-S52E/EB/EG
MOTHER P.C.B.(VEP76126D)
OPERATION P.C.B.(VEP70131A)
POWER SW P.C.B.(VEP70132A)
5.1CH P.C.B.(VEP74106A)

17.2. MOTHER P.C.B. ADDRESS INFORMATION

MOTHER P.C.B. AND 5.1CH P.C.B.

Transistor	
Q1051	D-5
Q1115	E-6
Q3801	B-3
Q3821	A-4
Q3851	A-2
Q3852	A-2
Q4302	E-4
Q4422	A-5
Q4423	A-5
Q4601	B-8
Q4611	B-8
Q4621	B-8
Q4622	B-8
Q4631	B-8
Q4632	B-8
Q4641	B-8
Q4642	B-8
Q4651	B-8
Q4652	B-8
Q4751	B-5
Q4901	E-4
Q4911	E-4
Q6085	F-3

Transistor-resistor	
QR1115	F-6
QR3501	B-3
QR3502	B-4
QR3821	B-3
QR3822	B-3
QR3823	B-3
QR4302	E-4
QR4303	E-4
QR4306	E-4
QR4307	C-4
QR4308	C-4
QR4901	E-4
QR4902	E-4

Inntegrated Circuit	
IC1021	C-6
IC1101	D-5
IC1151	E-6
IC1195	E-5
IC3501	B-4
IC3502	B-4
IC3802	A-3
IC3811	B-3
IC4301	C-3
IC4302	D-4
IC4303	D-4
IC4304	C-4
IC6001	E-2
IC6021	A-5

Test Point	
CL1001	B-6
CL1002	B-6
CL1003	B-6
CL1004	A-6
CL1005	B-6
CL1006	B-6
CL1007	B-6
CL1101	F-5
CL1104	E-5
CL1105	E-5
CL1106	F-5
CL1107	E-6
CL1108	F-6
CL1109	F-4
CL1111	E-5
CL1112	F-5
CL1113	E-4
CL1115	E-6
CL1116	E-6
CL3501	A-1
CL3502	A-1
CL3503	A-1
CL3504	A-1
CL3505	A-1
CL3506	A-1
CL3507	A-1
CL4301	E-4
CL4303	E-4
CL4901	E-4
CL4902	E-4
CL4903	E-4
CL6001	E-2
CL6005	E-3
CL6007	E-3
CL6026	F-3
CL6027	F-3
CL6028	F-3
CL6029	F-3
CL6030	E-4
CL6081	F-1
CL6082	F-1
CL6083	F-1
CL6084	F-1
CL6085	F-1
CL6086	F-1
CL6087	F-1
CL6088	F-1
CL6089	F-1
CL6090	F-2
CL6091	F-2
CL6092	F-2
CL6093	F-2
CL6094	F-2
CL6095	F-2
CL6096	F-2
CL6097	F-2
CL6098	F-2
CL6099	F-2
CL6100	F-2
CL6102	F-2
CL6103	F-2
CL6201	D-2
CL6202	D-2
JW4601	A-8

Connector	
FP3501	D-3
FP3502	C-3
FP4301	C-4
FP4501	C-4
FP4601	A-8
P1001	A-6
PJ6101	E-6
JK3871	A-3
JK4401	A-4
JK4601	B-8

Transformer	
T1021	D-6

ADDRESS INFORMATION

17.3. MODULE P.C.B. (1/2)

MODULE P.C.B. (1/2)

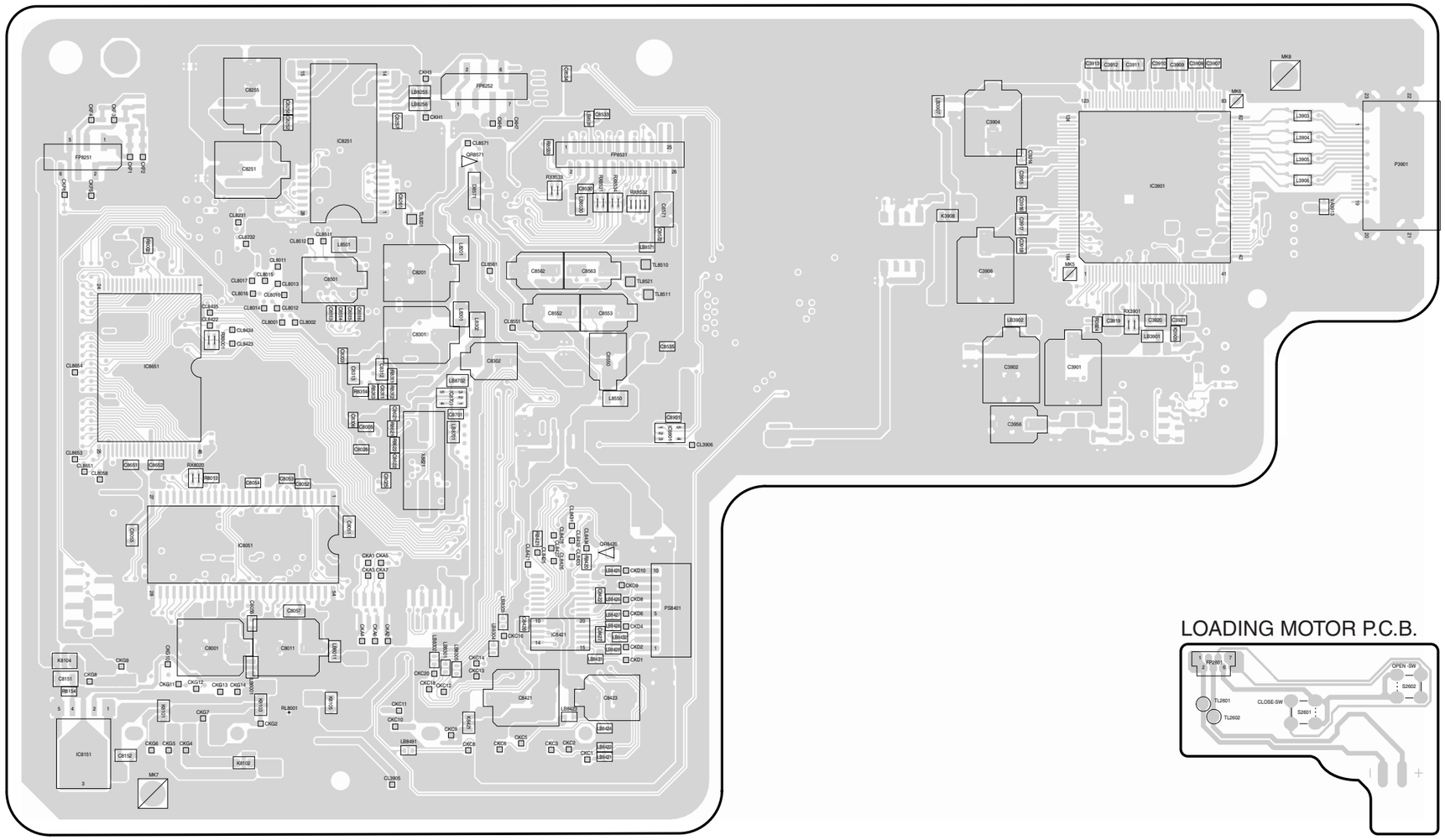

LOADING MOTOR P.C.B.

(COMPONENT SIDE)

DVD-S52E/EB/EG
MODULE P.C.B.(1/2)(VEP76136BT)
LOADING MOTOR P.C.B.(VEP70114A-1)

17.4. MODULE P.C.B. (2/2)

MODULE P.C.B. (2/2)

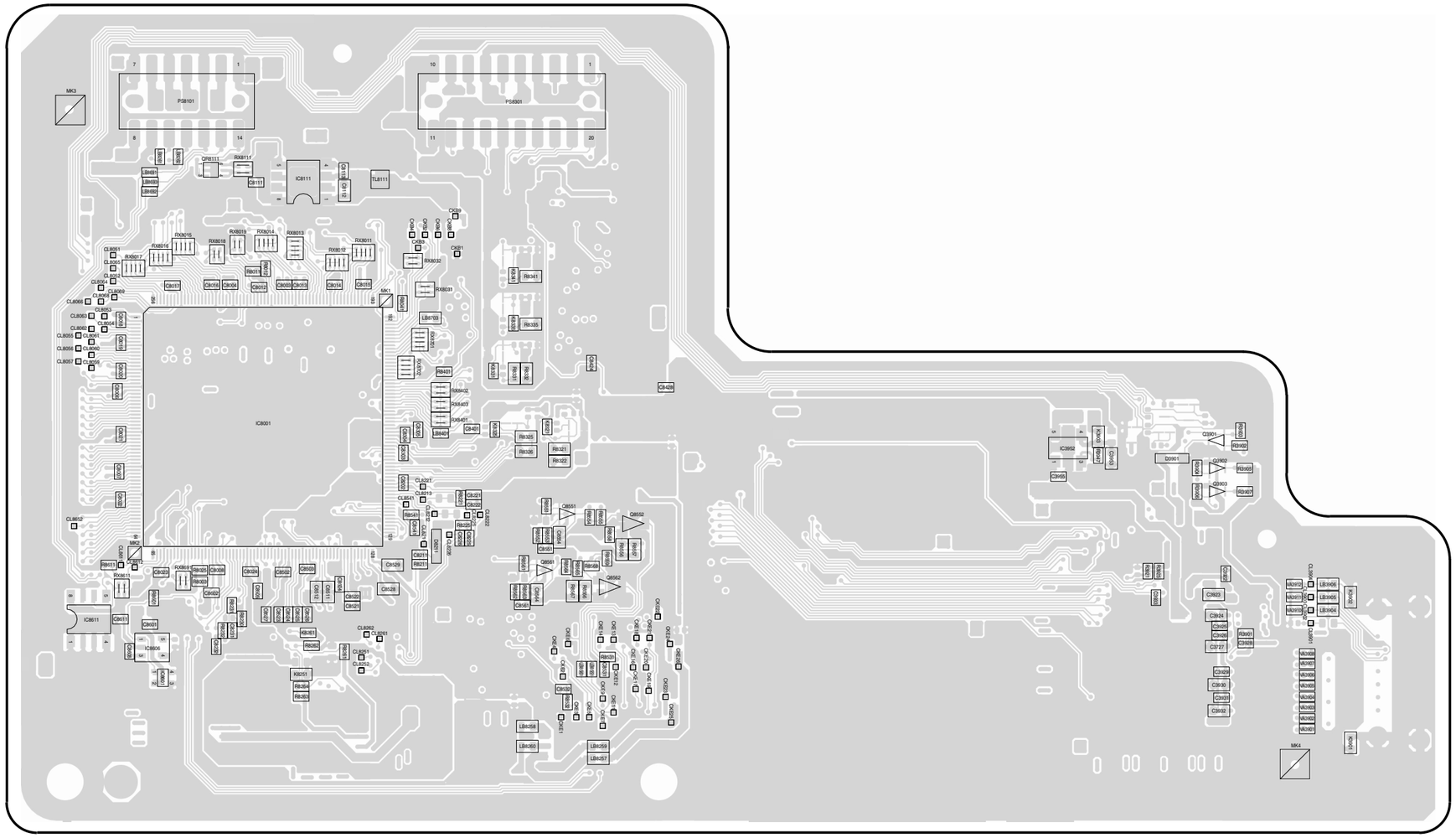

(FOIL SIDE)

DVD-S52E/EB/EG
MODULE P.C.B.(2/2)(VEP76136BT)

17.5. MODULE P.C.B. ADDRESS INFORMATION

MODULE P.C.B.

Transistor		
Q3901	C-8	F
Q3902	C-8	F
Q3903	C-8	F
Q8551	C-4	F
Q8552	C-5	F
Q8561	C-4	F
Q8562	C-5	F
Transistor-resistor		
QR8111	E-2	F
QR8420	C-5	C
QR8571	E-4	C
Inntegrated Circuit		
IC3901	E-7	C
IC3952	C-7	F
IC8001	D-3	F
IC8051	C-3	C
IC8111	E-3	F
IC8151	B-2	C
IC8251	E-3	C
IC8421	B-4	C
IC8601	B-2	F
IC8606	B-2	F
IC8611	C-2	F
IC8651	D-2	C
IC8701	D-4	C
IC8901	C-5	C
Test Point		
CKA1	C-3	C
CKA2	B-3	C
CKA3	C-3	C
CKA4	B-3	C
CKA5	C-3	C
CKA6	B-3	C
CKA7	C-3	C
CKB1	D-4	F
CKB2	D-4	F
CKB3	D-4	F
CKB4	D-4	F
CKB6	D-4	F
CKB8	D-4	F
CKB9	E-4	F
CKC1	B-4	C
CKC2	B-4	C
CKC3	B-4	C
CKC5	B-4	C
CKC6	B-4	C
CKC8	B-4	C
CKC9	B-4	C
CKC10	B-3	C
CKC11	B-3	C
CKC12	B-4	C
CKC13	B-4	C
CKC14	B-4	C
CKC16	B-4	C
CKC18	B-4	C
CKC20	B-4	C
CKD1	B-5	C
CKD2	B-5	C
CKD4	C-5	C
CKD6	C-5	C
CKD8	C-5	C
CKD9	C-5	C
CKD10	C-5	C
CKE1	B-4	F
CKE2	B-4	F
CKE3	B-4	F
CKE4	B-4	F
CKE5	B-4	F
CKE6	B-4	F
CKE7	B-4	F
CKE9	B-4	F
CKE11	B-5	F
CKE12	B-5	F
CKE13	B-5	F
CKE14	B-4	F
CKE16	B-5	F
CKE16	B-5	F
CKE17	B-5	F
CKE18	B-5	F
CKE19	B-5	F
CKE20	B-5	F
CKE21	B-5	F
CKE22	C-5	F
CKE23	B-5	F
CKE24	B-5	F
CKE25	B-5	F
CKE26	B-5	F
CKF1	E-2	C
CKF2	E-2	C
CKF3	E-2	C
CKF4	E-2	C
CKF5	E-2	C
CKF6	E-2	C
CKG2	B-3	C
CKG4	B-2	C
CKG5	B-2	C
CKG6	B-2	C
CKG7	B-2	C
CKG8	B-2	C
CKG9	B-2	C
CKG10	B-2	C
CKG11	B-2	C
CKG12	B-2	C
CKG13	B-3	C
CKG14	B-3	C

ADDRESS INFORMATION
C.....COMPONENT SIDE
F.....FOIL SIDE

MODULE P.C.B.

Test Point		
CKH1	E-4	C
CKH3	E-4	C
CKH5	E-4	C
CKH7	E-4	C
CL3901	C-8	F
CL3902	C-8	F
CL3903	C-8	F
CL3904	C-8	F
CL3905	B-5	F
CL3906	C-5	C
CL8001	D-3	C
CL8002	D-3	C
CL8010	D-3	C
CL8011	D-3	C
CL8012	D-3	C
CL8013	D-3	C
CL8014	D-3	C
CL8015	D-3	C
CL8016	D-3	C
CL8017	D-3	C
CL8051	D-2	F
CL8052	D-2	F
CL8053	D-2	F
CL8054	D-2	F
CL8055	D-2	F
CL8056	D-2	F
CL8057	D-2	F
CL8058	C-2	C
CL8059	D-2	F
CL8060	D-2	F
CL8061	D-2	F
CL8062	D-2	F
CL8063	D-2	F
CL8064	D-2	F
CL8065	D-2	F
CL8066	D-2	F
CL8068	D-2	F
CL8069	D-2	F
CL8211	C-4	F
CL8212	C-4	F
CL8213	C-4	F
CL8221	C-4	F
CL8222	C-4	F
CL8225	C-4	F
CL8226	C-4	F
CL8231	E-2	C
CL8232	D-3	C
CL8251	B-3	F
CL8252	B-3	F
CL8261	B-3	F
CL8262	B-3	F
CL8421	C-4	C
CL8422	D-2	C
CL8423	D-3	C
CL8424	D-3	C
CL8425	C-4	C
CL8426	C-4	C
CL8427	C-4	C
CL8428	C-4	C
CL8431	C-4	C
CL8432	C-4	C
CL8433	C-4	C
CL8434	C-4	C
CL8435	D-2	C
CL8511	D-3	C
CL8512	D-3	C
CL8541	C-4	C
CL8551	D-4	C
CL8561	D-4	C
CL8571	E-4	C
CL8611	C-2	F
CL8612	C-2	F
CL8651	C-2	C
CL8652	C-2	F
CL8653	C-2	C
CL8654	D-2	C
RL8001	B-3	C
TL8111	E-3	F
TL8201	E-4	C
TL8510	D-5	C
TL8511	D-5	C
TL8521	D-5	C
Connector		
FP8251	E-2	C
FP8252	E-4	C
FP8531	E-5	C
P3901	E-8	C
PS8101	E-2	F
PS8301	E-4	F
PS8401	C-5	C

18 EXPLODED VIEWS

18.1. CASING PARTS & MECHANISM SECTION EXPLODED VIEW

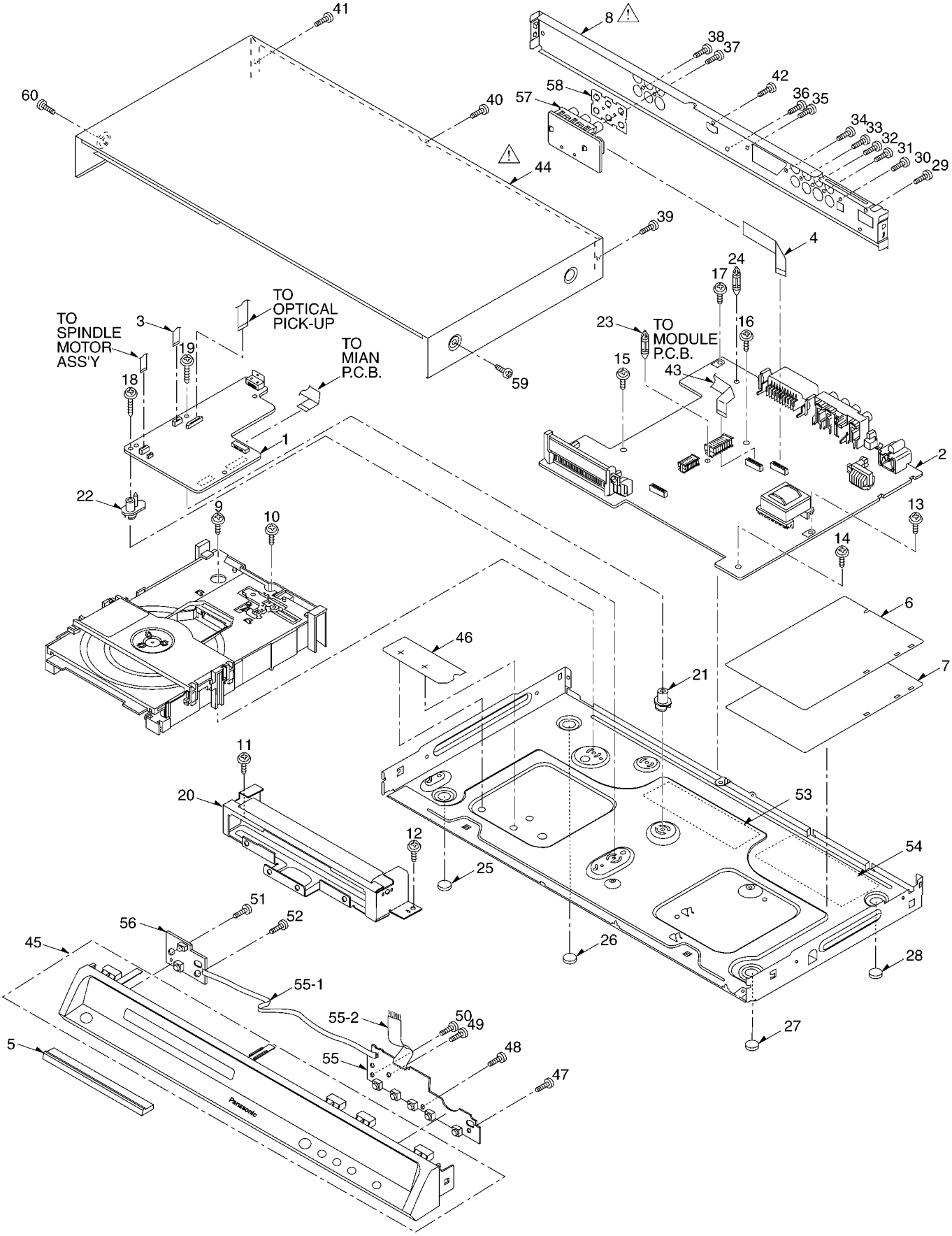

18.2. MECHANISM SECTION EXPLODED VIEW

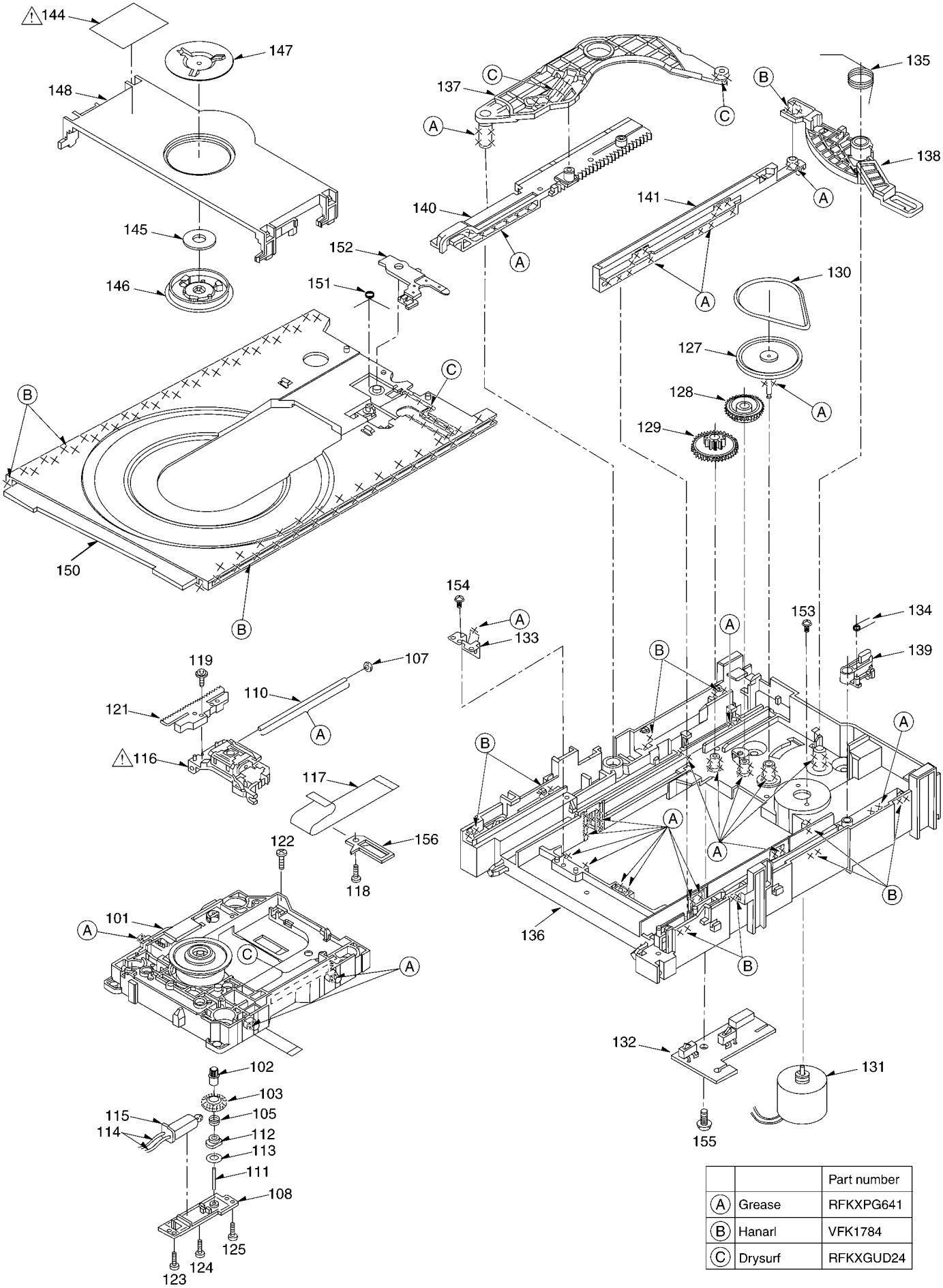

		Part number
A	Grease	RFKXPG641
B	Hanarl	VFK1784
C	Drysurf	RFKXGUD24

18.3. PACKING & ACCESSORIES SECTION EXPLODED VIEW

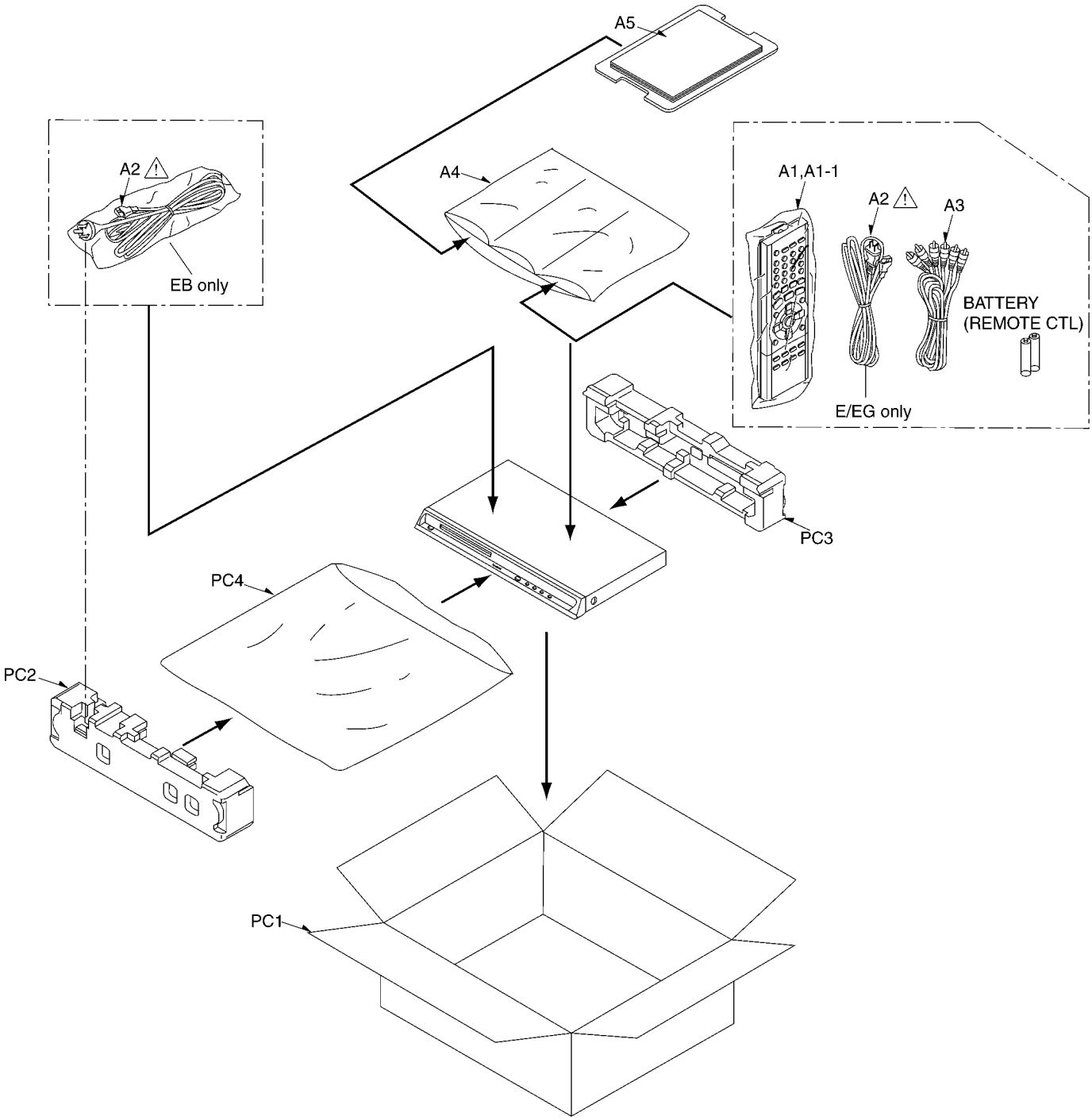

19 REPLACEMENT PARTS LIST

Notes:

*Important safety notice:

Components identified by ⚠ mark have special characteristics important for safety.

Furthermore, special parts which have purposes of fire-retardant (resistors), high-quality sound (capacitors), low-noise (resistors), etc. are used.

When replacing any of components, be sure to use only manufacture's specified parts shown in the parts list.

*Warning: This product uses a laser diode. Refer to caution statements.

*Capacity values are in microfarads (μF) unless specified otherwise, P=Pico-farads (pF), F=Farads (F).

*Resistance values are in ohms, unless specified otherwise, 1K=1,000 (OHM), 1M=1,000k (OHM).

*The marking (RTL) indicates the retention time is limited for this item. After the discontinuation of this assembly in production, it will no longer be available.

*"(IA)-(ID)", marks in Remarks indicate languages of instruction manuals. [(IA): English, (IB): Polish, (IC): German/Italian/French, (ID): Dutch/Swedish/Danish.]

*All parts except parts mentioned [SPC] in the Remarks column are supplied by PAVCSG.

*Parts mentioned [SPC] are supplied by PAVC-CSG.

Ref. No.	Part No.	Part Name & Description	Pcs	Remarks
1	VEP76136BT	MODULE P.C.B.	1	(RTL)
2	VEP76126D	MOTHER P.C.B.	1	(RTL)
3	REZ1710	FFC(7P)	1	
4	REZ1722	FFC(10P)	1	
5	RGKC0068A	TRAY TOP	1	
6	RGQC0037	INSULATION SHEET	1	
7	RGQC0037	INSULATION SHEET	1	
8	RGRC0022C-A1	REAR PANEL	1	E/EG ⚠
8	RGRC0022C-B1	REAR PANEL	1	EB ⚠
9	RHD30101-1J	SCREW	1	
10	RHD30101-1J	SCREW	1	
11	RHD30111-3J	SCREW	1	
12	RHD30111-3J	SCREW	1	
13	RHD30111-3J	SCREW	1	
14	RHD30111-3J	SCREW	1	
15	RHD30111-3J	SCREW	1	
16	RHD30111-3J	SCREW	1	
17	RHD30111-3J	SCREW	1	
18	RHDC0023-J	SCREW	1	
19	RHDC0023-J	SCREW	1	
20	RGQC0038	FRONT ANGLE	1	
21	RMNC0016	PCB SUPPORT(A)	1	
22	RMNC0017	PCB SUPPORT(B)	1	
23	RMNC0019	PCB SUPPORT	1	
24	RMNC0019	PCB SUPPORT	1	
25	RKA0130-K	FOOT RUBBER	1	
26	RKA0130-K	FOOT RUBBER	1	
27	RKA0130-K	FOOT RUBBER	1	
28	RKA0130-K	FOOT RUBBER	1	
29	VHD0690-1	SCREW	1	
30	VHD0690-1	SCREW	1	
31	VHD0690-1	SCREW	1	
32	VHD0690-1	SCREW	1	
33	VHD0690-1	SCREW	1	
34	VHD0690-1	SCREW	1	
35	VHD0690-1	SCREW	1	
36	VHD0690-1	SCREW	1	
37	VHD0690-1	SCREW	1	
38	VHD0690-1	SCREW	1	
39	VHD0690-1	SCREW	1	
40	VHD0690-1	SCREW	1	
41	VHD0690-1	SCREW	1	
42	XSB3+8FN	SCREW	1	
43	REZ1721	FFC(10P)	1	
44	RKMC0012-S	TOP PANEL	1	(S) ⚠
44	RKMC0012-K	TOP PANEL	1	(K) ⚠
45	RFKGDVDS52BS	FRONT PANEL ASS'Y	1	(S)
45	RFKGDVDS52BK	FRONT PANEL ASS'Y	1	(K)
46	RGQC0054	DUSTPROOF SHEET	1	
47	RHD26046	SCREW	1	
48	RHD26046	SCREW	1	
49	RHD26046	SCREW	1	
50	RHD26046	SCREW	1	
51	RHD26046	SCREW	1	
52	RHD26046	SCREW	1	
53	RQLCA0327	HDCD LABEL	1	
54	RQLCA0468	DTS LABEL	1	
55	VEP70131A	FRONT P.C.B.	1	(RTL)
55-1	REZ1709	CABLE (3P)	1	
55-2	REZ1708	CABLE (5P)	1	
56	VEP70132A	SW P.C.B.	1	(RTL)
57	VEP74106A	5.1CH P.C.B.	1	(RTL)
58	RMCC0034	EARTH PLATE	1	
59	RHD30007-1SJ	SCREW	1	(S)
59	RHD30007-K2	SCREW	1	(K)
60	RHD30007-1SJ	SCREW	1	(S)
60	RHD30007-K2	SCREW	1	(K)
101	RXQ1327-1	SPINDLE MOTOR ASS'Y	1	
102	RDG0557	PINION SHAFT	1	
103	RDG0558	BEVEL GEAR	1	
105	RMB0713-1	THRUST SPRING	1	
107	RMG0617-H	CUSHION RUBBER(A)	1	
108	RMQ1112	MOTOR COVER	1	
110	RMS0788	GUIDE SHAFT	1	
111	RMS0798	GEAR SHAFT	1	
112	RMX0233	THRUST WASHER	1	
113	RMX0247	WASHER	1	
114	RWJ6702042	MOTOR CABLE	1	
115	RXQ0946	TRAVERSE MOTOR ASS'Y	1	
116	RAF3114A-CG	OPTICAL PICK-UP	1	⚠
117	REZ1686-1	FFC	1	
118	RHD14112-J	SCREW	1	
119	RHD17046-1	SCREW	1	
121	RMM0261	OPU DRIVE RACK	1	
122	VHD1224-1	SCREW	1	
123	VHD1224-1	SCREW	1	
124	VHD1224-1	SCREW	1	
125	VHD1224-1	SCREW	1	
127	RDG0597	PULLEY GEAR	1	
128	RDG0548	RELAY GEAR	1	
129	RDG0549	DRIVE GEAR	1	
130	RDV0070	BELT	1	
131	REM0132	LOADING MOTOR ASS'Y	1	
132	VEP70114A-1	MOTOR P.C.B.	1	(RTL)
133	RMC0387	SUPPORT SPRING	1	
134	RME0351	LOCK LEVER SPRING	1	
135	RMEC0350	CHANGE LEVER SPRING	1	
136	RMK0616-1	MECHA CHASSIS ASS'Y	1	
137	RML0680-1	DRIVE ARM	1	
138	RML0628	CHANGE LEVER	1	
139	RML0629	LOCK LEVER	1	
140	RMM0283	DRIVE RACK	1	

Ref. No.	Part No.	Part Name & Description	Pcs	Remarks
141	RMM0284	SUB RACK	1	
144	RQLCA0141	LASER CAUTION LABEL	1	⚠
145	JSMC0048	MAGNET	1	
146	RMR1685-X	CLAMPER	1	
147	RMA1890	MAGNET HOLDER	1	
148	RMR1686-K	CLAMP PLATE	1	
150	RGQ0417-K	TRAY	1	
151	RME0353-1	TRAY SLIDER SPRING	1	
152	RML0631	TRAY SLIDER	1	
153	XQN17+C25FJ	SCREW	1	
154	XTB26+6GFJ	SCREW	1	
155	XTN2+6GFJ	SCREW	1	
156	RMQ1280	FFC HOLDER PIECE	1	
A1	EUR7631200R	REMOTE CONTROL ASS'Y	1	
A1-1	UR76EC3103A	BATTERY COVER	1	
A2	K2CQ2CA00006	AC CORD	1	E/EG ⚠
A2	K2CT3CA00004	AC CORD	1	EB ⚠
A3	K2KA6BA00004	AV CORD	1	
A4	RPFC0042	POLYETHYLENE BAG(F.B.)	1	
A5	RQT8519-B	OPERATING INSTRUCTIONS	1	E/EB (IA)
A5	RQT8518-E	OPERATING INSTRUCTIONS	1	E (IB)
A5	RQT8516-D	OPERATING INSTRUCTIONS	1	EG (IC)
A5	RQT8517-H	OPERATING INSTRUCTIONS	1	EG (ID)
C1001	F0CAF104A024	0.1U	1	⚠
C1002	F0CAF104A024	0.1U	1	⚠
C1003	ECKMNA471MBV	470P	1	⚠
C1004	ECKMNA102MEV	1000P	1	⚠
C1011	ECA2WHG100E	450V 10U	1	
C1012	ECA2WHG100E	450V 10U	1	
C1021	F1A3D221A010	2000V 220P	1	
C1031	F1B3A332A008	1000V 0.0033U	1	
C1041	F2A1H1010044	50V 100U	1	
C1051	ECQB1H152JF4	50V 0.0015U	1	
C1061	ECQB1H101KF4	50V 100P	1	
C1071	ECQB1H103JF4	50V 0.01U	1	
C1081	ECQB1H152JF4	50V 0.0015U	1	
C1082	ECQB1H472JF4	50V 0.0047U	1	
C1092	F2A1H100A003	50V 10U	1	
C1101	ECQV1H684JL2	50V 0.68U	1	
C1102	ECQB1H104JF4	50V 0.1U	1	
C1110	F1H1H102A798	50V 1000P	1	
C1111	F2A1A681A539	10V 680U	1	
C1112	F2A1A102A206	10V 1000U	1	
C1115	ECJ1ZF1C104Z	16V 0.1U	1	
C1116	F2A1A221A501	10V 220U	1	
C1117	F2A0J102A247	6.3V 1000U	1	
C1121	F2A0J681A550	6.3V 680U	1	
C1122	F2A0J222A522	6.3V 2200U	1	
C1141	F2A1E1010067	25V 100U	1	
C1151	F2A1E3310051	25V 330U	1	
C1153	F2A1E331A550	25V 330U	1	
C1154	F2A1C221A236	16V 220U	1	
C1155	ECJ1VB1E104K	25V 0.1U	1	
C1171	F2A1A1010072	10V 100U	1	
C1195	ECJ1VB1A105K	10V 1U	1	
C1196	ECJ1VB1H103K	50V 0.01U	1	
C1197	ECJ1VB1A105K	10V 1U	1	
C3502	F1H1H103A798	50V 0.01U	1	
C3503	ECJ1VB1C105K	16V 1U	1	
C3504	ECJ1VB1C105K	16V 1U	1	
C3505	F1H1C104A065	16V 0.1U	1	
C3506	F1H1H103A798	50V 0.01U	1	
C3507	F2A0J220A245	6.3V 22U	1	
C3508	ECJ1VB0J105K	6.3V 1U	1	
C3509	ECJ1VB0J105K	6.3V 1U	1	

Ref. No.	Part No.	Part Name & Description	Pcs	Remarks
C3510	ECJ1VB0J105K	6.3V 1U	1	
C3511	ECJ1VB0J105K	6.3V 1U	1	
C3512	F2A0J102A247	6.3V 1000U	1	
C3513	F2A0J102A247	6.3V 1000U	1	
C3514	F2A0J102A247	6.3V 1000U	1	
C3515	F2A0J102A247	6.3V 1000U	1	
C3516	F2A0J102A247	6.3V 1000U	1	
C3517	F1H1C104A065	16V 0.1U	1	
C3518	F2A0J470A245	6.3V 47U	1	
C3727	ECJ1VB0J105K	6.3V 1U	1	
C3804	F1H1H103A798	50V 0.01U	1	
C3805	F1H1H103A798	50V 0.01U	1	
C3806	F2A0J470A245	6.3V 47U	1	
C3811	F2A0J470A245	6.3V 47U	1	
C3812	ECJ1VB1C104K	16V 0.1U	1	
C3813	F1H1H103A798	50V 0.01U	1	
C3814	ECJ1VB1C105K	16V 1U	1	
C3815	ECJ1VB1C105K	16V 1U	1	
C3816	F2A0J220A245	6.3V 22U	1	
C3817	ECJ1VB1C105K	16V 1U	1	
C3818	ECJ1VB1C105K	16V 1U	1	
C3819	ECJ1VB1C105K	16V 1U	1	
C3851	ECJ1VC1H102J	50V 1000P	1	
C3852	ECJ1VC1H102J	50V 1000P	1	
C3871	F1H1H101A799	50V 100P	1	
C3872	F1H1H101A799	50V 100P	1	
C3901	F2G0G331A012	4V 330U	1	
C3902	F2G0G331A012	4V 330U	1	
C3904	F2G0G331A012	4V 330U	1	
C3906	F2G0G331A012	4V 330U	1	
C3907	F1G1A104A014	10V 0.1U	1	
C3908	F1G1A104A014	10V 0.1U	1	
C3909	ECJ1VB0J105K	6.3V 1U	1	
C3910	F1G1A104A014	10V 0.1U	1	
C3911	ECJ1VB0J105K	6.3V 1U	1	
C3912	ECJ1VB0J105K	6.3V 1U	1	
C3913	F1G1A104A014	10V 0.1U	1	
C3914	F1G1A104A014	10V 0.1U	1	
C3915	ECJ1VB0J105K	6.3V 1U	1	
C3916	F1G1A104A014	10V 0.1U	1	
C3917	ECJ1VB0J105K	6.3V 1U	1	
C3918	F1G1A104A014	10V 0.1U	1	
C3919	ECJ1VB0J105K	6.3V 1U	1	
C3920	ECJ1VB0J105K	6.3V 1U	1	
C3921	F1G1A104A014	10V 0.1U	1	
C3922	F1G1A104A014	10V 0.1U	1	
C3923	ECJ1VB0J105K	6.3V 1U	1	
C3924	ECJ1VB0J105K	6.3V 1U	1	
C3925	F1G1A104A014	10V 0.1U	1	
C3926	F1G1A104A014	10V 0.1U	1	
C3928	F1G1A104A014	10V 0.1U	1	
C3929	F1G1A104A014	10V 0.1U	1	
C3930	ECJ1VB0J105K	6.3V 1U	1	
C3931	F1G1A104A014	10V 0.1U	1	
C3932	ECJ1VB0J105K	6.3V 1U	1	
C3933	F1G1A104A014	10V 0.1U	1	
C3953	ECJ1VB0J105K	6.3V 1U	1	
C3955	ECJ0EB1C103K	16V 0.01U	1	
C3956	EEE0JA330WR	6.3V 33U	1	
C4291	F2A1A102A206	10V 1000U	1	
C4313	F1H1C104A090	16V 0.1U	1	
C4314	F1H1C104A090	16V 0.1U	1	
C4315	F1H1C104A090	16V 0.1U	1	
C4316	F1H1C104A090	16V 0.1U	1	
C4317	F1H1C104A090	16V 0.1U	1	
C4318	F1H1C104A090	16V 0.1U	1	
C4319	F1H1C104A090	16V 0.1U	1	
C4320	F1H1C104A090	16V 0.1U	1	
C4321	F1H1C104A090	16V 0.1U	1	
C4323	F2A1H221A236	50V 220U	1	
C4324	F2A1H221A236	50V 220U	1	
C4331	F1H1H820A799	50V 82P	1	
C4332	F1H1H820A799	50V 82P	1	

Ref. No.	Part No.	Part Name & Description	Pcs	Remarks
C4333	F1H1H820A799	50V 82P	1	
C4334	F1H1H820A799	50V 82P	1	
C4335	F1H1H820A799	50V 82P	1	
C4336	F1H1H820A799	50V 82P	1	
C4337	F1H1H820A799	50V 82P	1	
C4338	F1H1H820A799	50V 82P	1	
C4414	F2A1E470A205	25V 47U	1	
C4415	F2A1E470A205	25V 47U	1	
C4416	F2A1E470A205	25V 47U	1	
C4417	F2A1E470A205	25V 47U	1	
C4419	F2A1E470A205	25V 47U	1	
C4420	F2A1E470A205	25V 47U	1	
C4421	F2A1E470A205	25V 47U	1	
C4422	F2A1E470A205	25V 47U	1	
C4423	ECJ1VC1H102J	50V 1000P	1	
C4427	ECJ1VC1H102J	50V 1000P	1	
C4431	F1H1C104A090	16V 0.1U	1	
C4432	F1H1C104A065	16V 0.1U	1	
C4501	F1H1H102A798	50V 1000P	1	
C4502	F1H1C104A065	16V 0.1U	1	
C4591	F1H1C104A090	16V 0.1U	1	
C4603	F1H1H102A799	50V 1000P	1	
C4613	F1H1H102A799	50V 1000P	1	
C4623	F1H1H102A799	50V 1000P	1	
C4633	F1H1H102A799	50V 1000P	1	
C4643	F1H1H102A799	50V 1000P	1	
C4653	F1H1H102A799	50V 1000P	1	
C4661	F1H1C104A065	16V 0.1U	1	
C4662	F1H1C104A065	16V 0.1U	1	
C4703	F1H1C104A065	16V 0.1U	1	
C4751	F2A1E470A205	25V 47U	1	
C4752	F2A1E470A205	25V 47U	1	
C4781	F2A0J470A599	6.3V 47U	1	
C4904	F2A1V221A082	35V 220U	1	
C4924	F2A1V221A082	35V 220U	1	
C6001	F2A0J101A245	6.3V 100U	1	
C6002	F1H1C104A065	16V 0.1U	1	
C6003	F1H1H103A798	50V 0.01U	1	
C6005	F2A1H100A601	50V 10U	1	
C6006	F1H1H103A798	50V 0.01U	1	
C6020	F1H1C104A065	16V 0.1U	1	
C6040	ECJ1VF1H103Z	50V 0.01U	1	
C6050	ECJ1VF1H103Z	50V 0.01U	1	
C6060	ECJ1VF1H103Z	50V 0.01U	1	
C6081	F1H1H103A798	50V 0.01U	1	
C6132	F1H1C104A065	16V 0.1U	1	
C8001	F2G0G331A012	4V 330U	1	
C8003	ECJ0EF1C104Z	16V 0.1U	1	
C8004	ECJ0EF1C104Z	16V 0.1U	1	
C8005	ECJ0EF1C104Z	16V 0.1U	1	
C8006	ECJ0EF1C104Z	16V 0.1U	1	
C8007	ECJ0EF1C104Z	16V 0.1U	1	
C8008	ECJ0EF1C104Z	16V 0.1U	1	
C8011	F2G0J101A066	6.3V 100U	1	
C8012	ECJ0EF1C104Z	16V 0.1U	1	
C8013	ECJ0EF1C104Z	16V 0.1U	1	
C8014	ECJ0EF1C104Z	16V 0.1U	1	
C8015	ECJ0EF1C104Z	16V 0.1U	1	
C8016	ECJ0EF1C104Z	16V 0.1U	1	
C8017	ECJ0EF1C104Z	16V 0.1U	1	
C8018	ECJ0EF1C104Z	16V 0.1U	1	
C8019	ECJ0EF1C104Z	16V 0.1U	1	
C8020	ECJ0EF1C104Z	16V 0.1U	1	
C8021	ECJ0EF1C104Z	16V 0.1U	1	
C8022	ECJ0EF1C104Z	16V 0.1U	1	
C8023	ECJ0EF1C104Z	16V 0.1U	1	
C8024	ECJ0EF1C104Z	16V 0.1U	1	
C8025	ECJ0EF1C104Z	16V 0.1U	1	
C8026	ECJ0EF1C104Z	16V 0.1U	1	
C8051	ECJ1VB0J105K	6.3V 1U	1	
C8052	F1G1A104A014	10V 0.1U	1	
C8053	ECJ0EF1C104Z	16V 0.1U	1	
C8054	ECJ0EC1H221J	50V 220P	1	

Ref. No.	Part No.	Part Name & Description	Pcs	Remarks
C8055	ECJ1VB0J105K	6.3V 1U	1	
C8056	ECJ0EB1E222K	25V 2200P	1	
C8057	ECJ1VB0J105K	6.3V 1U	1	
C8111	F1G1A104A014	10V 0.1U	1	
C8112	ECJ1VB0J105K	6.3V 1U	1	
C8113	ECJ0EB1E471K	25V 470P	1	
C8151	ECJ2FB0J106K	6.3V 10U	1	
C8152	ECJ1VB1C105K	16V 1U	1	
C8201	F2G0J101A066	6.3V 100U	1	
C8202	F1G1A104A014	10V 0.1U	1	
C8203	F1G1A104A014	10V 0.1U	1	
C8211	ECJ0EB1E122K	25V 1200P	1	
C8221	ECJ0EB1E102K	25V 1000P	1	
C8222	F1G1E821A056	25V 820P	1	
C8225	ECJ0EB1E102K	25V 1000P	1	
C8226	ECJ0EB1E102K	25V 1000P	1	
C8231	F1G1A104A014	10V 0.1U	1	
C8232	F1G1A104A014	10V 0.1U	1	
C8251	F2G0J221A065	6.3V 220U	1	
C8252	ECJ0EF1C104Z	16V 0.1U	1	
C8255	F2G1C470A076	16V 47U	1	
C8256	ECJ0EF1C104Z	16V 0.1U	1	
C8257	ECJ0EF1C104Z	16V 0.1U	1	
C8261	ECJ0EF1C104Z	16V 0.1U	1	
C8301	F2G0J221A031	6.3V 220U	1	
C8302	F2G0J330A031	6.3V 220U	1	
C8303	F1G1A104A014	10V 0.1U	1	
C8304	F1G1A104A014	10V 0.1U	1	
C8305	F1G1A104A014	10V 0.1U	1	
C8306	F1G1A104A014	10V 0.1U	1	
C8311	F1G1A104A014	10V 0.1U	1	
C8312	ECJ1VB0J105K	6.3V 1U	1	
C8313	ECJ1VB0J105K	6.3V 1U	1	
C8401	F1G1H150A542	50V 15P	1	
C8421	F2G0J101A083	6.3V 100U	1	
C8422	ECJ0EF1C104Z	16V 0.1U	1	
C8423	F2G0J330A083	6.3V 33U	1	
C8424	ECJ0EF1C104Z	16V 0.1U	1	
C8426	ECJ0EF1C104Z	16V 0.1U	1	
C8427	ECJ0EF1C104Z	16V 0.1U	1	
C8428	ECJ0EF1C104Z	16V 0.1U	1	
C8501	F2G0J101A031	6.3V 100U	1	
C8502	ECJ0EF1C104Z	16V 0.1U	1	
C8503	ECJ0EF1C104Z	16V 0.1U	1	
C8504	ECJ0EF1C104Z	16V 0.1U	1	
C8505	ECJ0EF1C104Z	16V 0.1U	1	
C8511	ECJ1VB0J105K	6.3V 1U	1	
C8512	ECJ1VB0J105K	6.3V 1U	1	
C8513	F1G1A104A014	10V 0.1U	1	
C8514	F1G1A104A014	10V 0.1U	1	
C8515	F1G1A104A014	10V 0.1U	1	
C8516	F1G1A104A014	10V 0.1U	1	
C8521	F1G1A104A014	10V 0.1U	1	
C8522	F1G1A104A014	10V 0.1U	1	
C8523	ECJ0EF1C104Z	16V 0.1U	1	
C8524	ECJ0EF1C104Z	16V 0.1U	1	
C8525	F1G1C562A040	16V 5600P	1	
C8526	F1G1C183A004	16V 0.018U	1	
C8527	ECJ0EB1A333K	10V 0.033U	1	
C8528	ECJ1VB0J105K	6.3V 1U	1	
C8529	ECJ1VB0J105K	6.3V 1U	1	
C8530	ECJ0EF1C104Z	16V 0.1U	1	
C8531	F1G1H1010005	50V 100P	1	
C8532	ECJ0EC1H221J	50V 220P	1	
C8533	ECJ0EF1C104Z	16V 0.1U	1	
C8534	F1G1A104A014	10V 0.1U	1	
C8535	F1G1A104A014	10V 0.1U	1	
C8541	ECJ0EB1E472K	25V 4700P	1	
C8550	F2G0J330A031	6.3V 33U	1	
C8551	ECJ0EF1C104Z	16V 0.1U	1	
C8552	F2G1C100A072	16V 10U	1	
C8553	F2G0J470A031	6.3V 47U	1	
C8554	ECJ1VB0J105K	6.3V 1U	1	

Ref. No.	Part No.	Part Name & Description	Pcs	Remarks
C8561	ECJ0EF1C104Z	16V 0.1U	1	
C8562	F2G1C100A072	16V 10U	1	
C8563	F2G0J470A031	6.3V 47U	1	
C8564	ECJ1VB0J105K	6.3V 1U	1	
C8571	F1K1A1060017	10V 10U	1	
C8572	ECJ0EF1C104Z	16V 0.1U	1	
C8601	ECJ0EF1C104Z	16V 0.1U	1	
C8602	ECJ0EB1C153K	16V 0.015U	1	
C8606	ECJ0EF1C104Z	16V 0.1U	1	
C8611	ECJ0EF1C104Z	16V 0.1U	1	
C8621	F1G1H150A542	50V 15P	1	
C8622	F1G1H150A542	50V 15P	1	
C8651	ECJ0EF1C104Z	16V 0.1U	1	
C8652	ECJ0EF1C104Z	16V 0.1U	1	
C8701	F1G1A104A014	10V 0.1U	1	
C8901	ECJ0EF1C104Z	16V 0.1U	1	
D1011	B0EDKT000009	DIODE	1	
D1031	B0HADV000001	DIODE	1	
D1041	B0HAGM000006	DIODE	1	
D1051	MAZ40910HF	DIODE	1	
D1061	MA2C16500E	DIODE	1	
D1071	MAZ41000MF	DIODE	1	
D1072	MA2C16500E	DIODE	1	
D1081	MAZ40910HF	DIODE	1	
D1082	MA2C16500E	DIODE	1	
D1111	B0JAMG000013	DIODE	1	
D1121	B0JAMG000013	DIODE	1	
D1122	B0EAKM000117	DIODE	1	
D1141	B0JAMK000023	DIODE	1	
D1151	B0JAMK000023	DIODE	1	
D1152	B0JAMK000023	DIODE	1	
D1153	B0EAKM000122	DIODE	1	
D1171	B0JAME000037	DIODE	1	
D3821	MA3X152A0L	DIODE	1	
D3901	MA2J72800L	DIODE	1	
D4301	MAZ40560HF	DIODE	1	
D6081	MAZ40910LF	ZENER DIODE	1	
D6101	LNJ201LPQJA	LED	1	
D8211	MA2J11100L	DIODE	1	
D8571	MA2J72800L	DIODE	1	
DP6081	A2BA00000229	FL DISPLAY	1	
F1001	K5D162BLA013	FUSE	1	⚠
FP2601	K1MN07B00009	7PIN JACK	1	
FP3501	K1KA14A00135	CONNECTOR(MALE) 14P	1	
FP3502	K1KA20A00215	CONNECTOR(MALE) 20P	1	
FP4301	K1MY10AA0055	JACK	1	
FP4501	K1MY10AA0055	JACK	1	
FP4601	K1MY10BA0120	JACK	1	
FP8251	K1MN06AA0076	JACK	1	
FP8252	K1MN07AA0076	JACK	1	
FP8531	K1MN26AA0041	JACK	1	
IC1021	C0DACZH00033	IC	1	
IC1101	C0DAEMB00003	IC	1	
IC1151	C0DBZHG00047	IC	1	
IC1195	C0DBFGC00008	IC	1	
IC3501	C9ZB00000498	IC	1	
IC3502	C1AB00001935	IC	1	
IC3802	C1AB00001731	IC	1	
IC3811	C9ZB00000461	IC	1	
IC3901	MN864701	IC	1	
IC3952	C0DBAHD00013	IC	1	
IC4301	C0ABBB000230	IC	1	
IC4302	C0ABBB000230	IC	1	
IC4303	C0ABBB000230	IC	1	
IC4304	C0ABBB000230	IC	1	
IC6001	MN101C87AAG	IC	1	

Ref. No.	Part No.	Part Name & Description	Pcs	Remarks
IC6021	B3ZAZ0000017	IC	1	
IC8001	MN2DS0009AP	IC	1	
IC8051	C3ABPG000133	IC	1	
IC8111	C0DBZYY00018	IC	1	
IC8151	C0DBEYY00016	IC	1	
IC8251	C0GBG0000054	IC	1	
IC8421	C0FBBK000050	IC	1	
IC8601	C0EBA0000029	IC	1	
IC8606	C0EBE0000455	IC	1	
IC8611	RFKWDVDS52A	IC(EEPROM)	1	
IC8651	RFKWSSA0E320	FLASH IC	1	[SPC]
IC8701	C0JBAB000614	IC	1	
IC8901	C0JBAA000344	IC	1	
IP3802	K5H501Z00005	IC PROTECTOR	1	
IP4751	K5H252Z00003	IC PROTECTOR	1	
IR6131	B3RAD0000115	REMOTE RECEIVING SENSOR	1	
JK3871	K1FB121B0016	JACK	1	
JK4401	K2YZ19000001	JACK AUDIO VIDEO OUT	1	
JK4601	K2HA612A0006	5.1CH AV JACK	1	
K3505	ERJ3GEY0R00V	1/10W 0	1	
K3810	ERJ3GEY0R00V	1/10W 0	1	
K3811	ERJ3GEY0R00V	1/10W 0	1	
K3813	ERJ3GEY0R00V	1/10W 0	1	
K3872	ERJ3GEY0R00V	1/10W 0	1	
K3901	ERJ3GEY0R00V	1/10W 0	1	
K3902	ERJ3GEY0R00V	1/10W 0	1	
K3903	ERJ3GEY0R00V	1/10W 0	1	
K3905	ERJ2GE0R00X	1/16W 0	1	
K3908	ERJ3GEY0R00V	1/10W 0	1	
K6001	ERJ3GEY0R00V	1/10W 0	1	
K6008	ERJ3GEY0R00V	1/10W 0	1	
K8101	ERJ3GEY0R00V	1/10W 0	1	
K8102	ERJ3GEY0R00V	1/10W 0	1	
K8103	ERJ3GEY0R00V	1/10W 0	1	
K8104	ERJ6GEY0R00V	1/10W 0	1	
K8105	ERJ3GEY0R00V	1/10W 0	1	
K8251	ERJ3GEY0R00V	1/10W 0	1	
K8261	ERJ2GE0R00X	1/16W 0	1	
K8321	ERJ2GE0R00X	1/16W 0	1	
K8325	ERJ2GE0R00X	1/16W 0	1	
K8331	ERJ2GE0R00X	1/16W 0	1	
K8335	ERJ2GE0R00X	1/16W 0	1	
K8341	ERJ2GE0R00X	1/16W 0	1	
K8421	ERJ3GEY0R00V	1/10W 0	1	
L1001	ELF15N003A	NOISE FILTER	1	⚠
L1111	G0A100HA0023	COIL 10UH	1	
L1117	G0C100JA0048	COIL 10UH	1	
L1131	G0C330KA0065	COIL 33UH	1	
L1141	G0C330KA0065	COIL 33UH	1	
L1151	G0A220GA0026	COIL 22UH	1	
L3501	G0C220JA0019	COIL 22UH	1	
L3502	G0C220JA0019	COIL 22UH	1	
L3903	J0MAB0000170	COIL	1	
L3904	J0MAB0000170	COIL	1	
L3905	J0MAB0000170	COIL	1	
L3906	J0MAB0000170	COIL	1	
L4291	G0C220KA0065	COIL 22UH	1	
L6001	G0C101JA0019	COIL 100UH	1	
L8201	G1C100K00019	CHIP INDUCTOR	1	
L8301	G1C100K00019	CHIP INDUCTOR	1	
L8302	G1C100K00019	CHIP INDUCTOR	1	
L8501	G1C100K00019	CHIP INDUCTOR	1	
L8550	G1C100KA0055	CHIP INDUCTOR 10UH	1	
LB3531	J0JBC0000015	COIL	1	
LB3532	J0JBC0000015	COIL	1	

Ref. No.	Part No.	Part Name & Description	Pcs	Remarks
LB3533	J0JBC0000015	COIL	1	
LB3534	J0JCC0000186	COIL	1	
LB3535	J0JBC0000015	COIL	1	
LB3536	J0JBC0000015	COIL	1	
LB3871	J0JBC0000015	COIL	1	
LB3872	J0JBC0000015	COIL	1	
LB3873	J0JBC0000015	COIL	1	
LB3874	J0JBC0000015	COIL	1	
LB3901	J0JHC0000045	COIL	1	
LB3902	J0JHC0000045	COIL	1	
LB3904	J0JCC0000119	COIL	1	
LB3905	J0JCC0000119	COIL	1	
LB3906	J0JCC0000119	COIL	1	
LB3907	J0JHC0000045	COIL	1	
LB8001	J0JHC0000045	COIL	1	
LB8011	J0JHC0000045	COIL	1	
LB8255	ERJ3GEY0R00V	1/10W 0	1	
LB8256	ERJ3GEY0R00V	1/10W 0	1	
LB8257	ERJ3GEY0R00V	1/10W 0	1	
LB8258	ERJ3GEY0R00V	1/10W 0	1	
LB8259	ERJ3GEY0R00V	1/10W 0	1	
LB8260	ERJ3GEY0R00V	1/10W 0	1	
LB8261	ERJ2GE0R00X	1/16W 0	1	
LB8262	ERJ2GE0R00X	1/16W 0	1	
LB8301	J0JBC0000042	COIL	1	
LB8302	J0JBC0000042	COIL	1	
LB8303	J0JBC0000042	COIL	1	
LB8304	J0JBC0000042	COIL	1	
LB8305	J0JBC0000042	COIL	1	
LB8401	J0JBC0000042	COIL	1	
LB8421	ERJ2GE0R00X	1/16W 0	1	
LB8422	ERJ2GE0R00X	1/16W 0	1	
LB8423	ERJ2GE0R00X	1/16W 0	1	
LB8424	ERJ2GE0R00X	1/16W 0	1	
LB8425	ERJ2GE0R00X	1/16W 0	1	
LB8426	ERJ2GE0R00X	1/16W 0	1	
LB8427	ERJ2GE0R00X	1/16W 0	1	
LB8428	ERJ2GE0R00X	1/16W 0	1	
LB8429	ERJ2GE0R00X	1/16W 0	1	
LB8431	ERJ2GE0R00X	1/16W 0	1	
LB8432	ERJ2GE0R00X	1/16W 0	1	
LB8491	ERJ2GE0R00X	1/16W 0	1	
LB8530	J0JHC0000045	COIL	1	
LB8531	ERJ2GE0R00X	1/16W 0	1	
LB8551	J0JBC0000042	COIL	1	
LB8561	J0JBC0000042	COIL	1	
LB8571	J0JBC0000042	COIL	1	
LB8691	ERJ2GEJ101X	1/16W 100	1	
LB8692	ERJ2GEJ101X	1/16W 100	1	
LB8693	ERJ2GEJ101X	1/16W 100	1	
LB8701	J0JBC0000015	COIL	1	
LB8702	J0JCC0000119	COIL	1	
LB8703	J0JCC0000119	COIL	1	
P1001	K2AA2B000011	AC JACK	1	⚠
P3901	K1FA119E0002	HDMI JACK	1	
PC1	RPGC0413	PACKING CASE	1	EG (S)
PC1	RPGC0414	PACKING CASE	1	EG (K)
PC1	RPGC0415	PACKING CASE	1	E (S)
PC1	RPGC0416	PACKING CASE	1	E (K)
PC1	RPGC0417	PACKING CASE	1	EB
PC2	RPNC0110A-1	CUSHION(A)	1	
PC3	RPNC0110B-1	CUSHION(B)	1	
PC4	RPFC0071-B	POLYETHYLENE BAG	1	
PJ6101	K1MP05A00004	JACK	1	
PS8101	K1KB14A00074	CONNECTOR(14P)	1	
PS8301	K1KB20A00165	CONNECTOR(20P)	1	
PS8401	K1MN10BA0147	JACK	1	
Q1051	B3PBA0000241	TRANSISTOR	1	⚠

Ref. No.	Part No.	Part Name & Description	Pcs	Remarks
Q1115	B1DHDD000029	TRANSISTOR	1	
Q3801	B1ABCF000138	TRANSISTOR	1	
Q3821	XN0460100L	TRANSISTOR	1	
Q3851	B1ABCF000138	TRANSISTOR	1	
Q3852	B1ABCF000138	TRANSISTOR	1	
Q3901	2SD1819A0L	CRYSTAL CHIP TRANSISTOR	1	
Q3902	B1CFHA000002	TRANSISTOR	1	
Q3903	B1CFHA000002	TRANSISTOR	1	
Q4302	B1ABCF000138	TRANSISTOR	1	
Q4422	B1ABCF000138	TRANSISTOR	1	
Q4423	B1ABCF000138	TRANSISTOR	1	
Q4601	2SD1819A0L	TRANSISTOR	1	
Q4611	2SD1819A0L	TRANSISTOR	1	
Q4621	2SD1819A0L	TRANSISTOR	1	
Q4622	2SD1819A0L	TRANSISTOR	1	
Q4631	2SD1819A0L	TRANSISTOR	1	
Q4632	2SD1819A0L	TRANSISTOR	1	
Q4641	2SD1819A0L	TRANSISTOR	1	
Q4642	2SD1819A0L	TRANSISTOR	1	
Q4651	2SD1819A0L	TRANSISTOR	1	
Q4652	2SD1819A0L	TRANSISTOR	1	
Q4751	B1ABCF000138	TRANSISTOR	1	
Q4901	B1BACD000011	TRANSISTOR	1	
Q4911	B1BCCD000013	TRANSISTOR	1	
Q6085	B1ABGC000011	TRANSISTOR	1	
Q8551	B1ABDF000018	TRANSISTOR	1	
Q8552	B1ADGB000008	TRANSISTOR	1	
Q8561	B1ABDF000018	TRANSISTOR	1	
Q8562	B1ADGB000008	TRANSISTOR	1	
QR1115	B1GBCFNN0043	TRANSISTOR	1	
QR3501	B1GBCFLL0035	TRANSISTOR	1	
QR3502	B1GBCFLL0035	TRANSISTOR	1	
QR3821	B1GBCFLL0035	TRANSISTOR	1	
QR3822	B1GBCFLL0035	TRANSISTOR	1	
QR3823	B1GDCFJJ0046	TRANSISTOR	1	
QR4302	UNR211H00L	TRANSISTOR	1	
QR4303	XN0431100L	TRANSISTOR	1	
QR4306	B1GBCFJA0026	TRANSISTOR	1	
QR4307	UNR511100L	TRANSISTOR	1	
QR4308	UNR521100L	CRYSTAL CHIP TRANSISTOR	1	
QR4901	XN0431100L	TRANSISTOR	1	
QR4902	XN0431100L	TRANSISTOR	1	
QR8111	XP0621400L	TRANSISTOR	1	
QR8420	B1GBCFJJ0047	TRANSISTOR	1	
QR8571	B1GDCFEC0001	TRANSISTOR	1	
R1001	ERDS2FJ474T	1/4W 470K	1	
R1002	ERDS2FJ474T	1/4W 470K	1	
R1031	ERG2SJ683P	2W 68K	1	
R1041	ERX12SJ4R7E	1/2W 4.7	1	
R1051	D1AA2002A005	1/4W 20K	1	
R1061	ERDS2TJ242T	1/4W 2.4K	1	
R1062	ERDS2TJ183T	1/4W 18K	1	
R1071	EROS2THF4301	1/4W 4.3K	1	
R1081	EROS2THF8201	1/4W 8.2K	1	
R1083	D1AA2702A005	1/4W 27K	1	
R1101	ERDS2TJ181T	1/4W 180	1	
R1102	D1AA4701A006	1/4W 0.7K	1	
R1103	D1AA4701A006	1/4W 0.7K	1	
R1104	ERJ6GEYJ102V	1/10W 1K	1	
R1105	ERJ3GEYJ222V	1/10W 2.2K	1	
R1106	ERJ3GEYJ102V	1/10W 1K	1	
R1107	ERJ3GEYJ103V	1/10W 10K	1	
R1115	ERJ3GEYJ104V	1/10W 100K	1	
R1116	ERJ3GEYJ102V	1/10W 1K	1	
R1191	ERJ3GEYJ104V	1/10W 100K	1	
R3501	ERJ3GEYJ223V	1/10W 22K	1	
R3521	ERJ3GEYJ223V	1/10W 22K	1	
R3531	ERJ3GEYJ750V	1/10W 75	1	
R3532	ERJ3GEYF750V	1/10W 75	1	

Ref. No.	Part No.	Part Name & Description	Pcs	Remarks
R3533	ERJ3GEYF750V	1/10W 75	1	
R3534	ERJ3GEYF750V	1/10W 75	1	
R3535	ERJ3GEYJ750V	1/10W 75	1	
R3536	ERJ3GEYJ750V	1/10W 75	1	
R3821	ERJ3GEYJ223V	1/10W 22K	1	
R3822	ERJ3GEYJ223V	1/10W 22K	1	
R3823	ERJ3GEYJ472V	1/10W 4.7K	1	
R3824	ERJ3GEYJ223V	1/10W 22K	1	
R3825	ERJ3GEYJ472V	1/10W 4.7K	1	
R3826	ERJ3GEYJ183V	1/10W 18K	1	
R3827	ERJ3GEYJ223V	1/10W 22K	1	
R3828	ERJ3GEYJ471V	1/10W 470	1	
R3851	ERJ3GEYJ681V	1/10W 680	1	
R3852	ERJ3GEYJ821V	1/10W 820	1	
R3853	ERJ3GEYJ821V	1/10W 820	1	
R3854	ERJ3GEYJ681V	1/10W 680	1	
R3871	ERJ3GEYF750V	1/10W 75	1	
R3872	ERJ3GEYF750V	1/10W 75	1	
R3873	ERJ3GEYF750V	1/10W 75	1	
R3874	ERJ3GEYF750V	1/10W 75	1	
R3875	ERJ3GEYJ221V	1/10W 220	1	
R3876	ERJ3GEYJ221V	1/10W 220	1	
R3877	ERJ3GEYJ750V	1/10W 75	1	
R3878	ERJ3GEYJ750V	1/10W 75	1	
R3901	ERJ2GEJ511X	1/16W 510	1	
R3902	ERJ2GEJ103X	1/16W 10K	1	
R3903	ERJ2GEJ103X	1/16W 10K	1	
R3904	ERJ2GEJ472X	1/16W 4.7K	1	
R3905	ERJ2GEJ222X	1/16W 2.2K	1	
R3906	ERJ2GEJ472X	1/16W 4.7K	1	
R3907	ERJ2GEJ222X	1/16W 2.2K	1	
R3921	ERJ2GE0R00X	1/16W 0	1	
R3924	ERJ2GE0R00X	1/16W 0	1	
R3925	ERJ2GEJ103X	1/16W 10K	1	
R3947	ERJ2GEJ103X	1/16W 10K	1	
R4301	ERJ3GEYJ271V	1/10W 270	1	
R4302	ERJ3GEYJ103V	1/10W 10K	1	
R4304	ERJ3GEYJ222V	1/10W 2.2K	1	
R4305	ERJ3GEYJ332V	1/10W 3.3K	1	
R4306	ERJ3GEYJ332V	1/10W 3.3K	1	
R4309	ERJ3GEYJ223V	1/10W 22K	1	
R4320	ERJ3GEYJ222V	1/10W 2.2K	1	
R4326	D0HB103ZA002	1/10W 10K	1	
R4327	D0HB103ZA002	1/10W 10K	1	
R4331	D0HB912ZA002	1/10W 9.1K	1	
R4332	D0HB912ZA002	1/10W 9.1K	1	
R4335	ERJ3GEYJ912V	1/10W 9.1K	1	
R4337	D0HB912ZA002	1/10W 9.1K	1	
R4338	D0HB912ZA002	1/10W 9.1K	1	
R4339	ERJ3GEYJ912V	1/10W 9.1K	1	
R4341	ERJ3GEYJ222V	1/10W 2.2K	1	
R4342	ERJ3GEYJ222V	1/10W 2.2K	1	
R4343	ERJ3GEYJ223V	1/10W 22K	1	
R4344	ERJ3GEYJ223V	1/10W 22K	1	
R4347	D0HB153ZA002	1/10W 15K	1	
R4348	D0HB153ZA002	1/10W 15K	1	
R4349	ERJ3GEYJ273V	1/10W 27K	1	
R4351	ERJ3GEYJ273V	1/10W 27K	1	
R4355	D0HB153ZA002	1/10W 15K	1	
R4356	D0HB153ZA002	1/10W 15K	1	
R4357	ERJ3GEYJ473V	1/10W 47K	1	
R4360	ERJ3GEYJ273V	1/10W 27K	1	
R4422	ERJ3GEYJ473V	1/10W 47K	1	
R4423	ERJ3GEYJ473V	1/10W 47K	1	
R4424	ERJ3GEYJ473V	1/10W 47K	1	
R4427	ERJ3GEYJ473V	1/10W 47K	1	
R4428	ERJ3GEYJ681V	1/10W 680	1	
R4429	ERJ3GEYJ681V	1/10W 680	1	
R4432	ERJ3GEYJ473V	1/10W 47K	1	
R4433	ERJ3GEYJ473V	1/10W 47K	1	
R4434	ERJ3GEYJ473V	1/10W 47K	1	
R4435	ERJ3GEYJ473V	1/10W 47K	1	
R4451	ERJ3GEYJ821V	1/10W 820	1	

Ref. No.	Part No.	Part Name & Description	Pcs	Remarks
R4452	ERJ3GEYJ821V	1/10W 820	1	
R4459	ERJ3GEYJ221V	1/10W 220	1	
R4460	ERJ3GEYJ221V	1/10W 220	1	
R4604	ERJ3GEYJ681V	1/10W 680	1	
R4605	ERJ3GEYJ821V	1/10W 820	1	
R4606	ERJ3GEYJ221V	1/10W 220	1	
R4614	ERJ3GEYJ681V	1/10W 680	1	
R4615	ERJ3GEYJ821V	1/10W 820	1	
R4616	ERJ3GEYJ221V	1/10W 220	1	
R4624	ERJ3GEYJ681V	1/10W 680	1	
R4625	ERJ3GEYJ821V	1/10W 820	1	
R4626	ERJ3GEYJ821V	1/10W 820	1	
R4627	ERJ3GEYJ681V	1/10W 680	1	
R4628	ERJ3GEYJ821V	1/10W 820	1	
R4634	ERJ3GEYJ681V	1/10W 680	1	
R4635	ERJ3GEYJ821V	1/10W 820	1	
R4636	ERJ3GEYJ821V	1/10W 820	1	
R4637	ERJ3GEYJ681V	1/10W 680	1	
R4638	ERJ3GEYJ821V	1/10W 820	1	
R4644	ERJ3GEYJ681V	1/10W 680	1	
R4645	ERJ3GEYJ821V	1/10W 820	1	
R4646	ERJ3GEYJ821V	1/10W 820	1	
R4647	ERJ3GEYJ681V	1/10W 680	1	
R4648	ERJ3GEYJ821V	1/10W 820	1	
R4654	ERJ3GEYJ681V	1/10W 680	1	
R4655	ERJ3GEYJ821V	1/10W 820	1	
R4656	ERJ3GEYJ821V	1/10W 820	1	
R4657	ERJ3GEYJ681V	1/10W 680	1	
R4658	ERJ3GEYJ821V	1/10W 820	1	
R4751	ERJ3GEYJ102V	1/10W 1K	1	
R4752	ERJ3GEYJ102V	1/10W 1K	1	
R4753	ERJ3GEYJ102V	1/10W 1K	1	
R4754	ERJ3GEYJ221V	1/10W 220	1	
R4755	ERJ3GEYJ750V	1/10W 75	1	
R4756	ERJ3GEYJ103V	1/10W 10K	1	
R4902	ERJ6GEYJ331V	1/10W 330	1	
R4903	ERJ6GEYJ331V	1/10W 330	1	
R6004	ERJ3GEYJ103V	1/10W 10K	1	
R6006	ERJ3GEYJ103V	1/10W 10K	1	
R6009	ERJ3GEYJ103V	1/10W 10K	1	
R6011	ERJ3GEYJ103V	1/10W 10K	1	
R6021	ERJ3GEYJ103V	1/10W 10K	1	
R6022	ERJ3GEY0R00V	1/10W 0	1	
R6023	ERJ3GEYJ103V	1/10W 10K	1	
R6024	ERJ3GEYJ472V	1/10W 4.7K	1	
R6025	ERJ3GEYJ103V	1/10W 10K	1	
R6026	ERJ3GEYJ122V	1/10W 1.2K	1	
R6040	ERJ3GEYJ103V	1/10W 10K	1	
R6050	ERJ3GEYJ103V	1/10W 10K	1	
R6060	ERJ3GEYJ103V	1/10W 10K	1	
R6061	ERJ3GEYJ104V	1/10W 100K	1	
R6066	ERJ3GEYJ104V	1/10W 100K	1	
R6071	ERJ3GEYJ303V	1/10W 30K	1	
R6072	ERJ3GEYJ473V	1/10W 47K	1	
R6081	ERQ14AJW181E	1/4W 180	1	
R6085	ERJ3GEYJ822V	1/10W 47K	1	
R6086	ERJ3GEYJ104V	1/10W 100K	1	
R6101	ERJ3GEYJ151V	1/10W 150	1	
R6151	ERJ3GEYJ122V	1/10W 1.2K	1	
R6161	ERJ3GEYJ122V	1/10W 1.2K	1	
R6171	ERJ3GEYJ122V	1/10W 1.2K	1	
R6202	ERJ3GEYJ101V	1/10W 100	1	
R6204	ERJ3GEYJ104V	1/10W 100K	1	
R8002	ERJ2GEJ473X	1/16W 47K	1	
R8003	ERJ2GEJ473X	1/16W 47K	1	
R8011	ERJ2GEJ220X	1/16W 22	1	
R8012	ERJ2GEJ220X	1/16W 22	1	
R8013	ERJ2GEJ220X	1/16W 22	1	
R8025	ERJ2GEJ473X	1/16W 47K	1	
R8041	ERJ2GEJ330X	1/16W 33	1	
R8154	ERJ2RHD102X	1/16W 1K	1	
R8211	ERJ2GEJ103X	1/16W 10K	1	
R8221	ERJ2GEJ822X	1/16W 8.2K	1	

Ref. No.	Part No.	Part Name & Description	Pcs	Remarks
R8225	ERJ2GEJ822X	1/16W 8.2K	1	
R8230	ERJ2GEJ222X	1/16W 2.2K	1	
R8231	ERJ2GEJ223X	1/16W 22K	1	
R8232	ERJ2GEJ752X	1/16W 7.5K	1	
R8261	ERJ2GEJ823X	1/16W 82K	1	
R8262	ERJ2GEJ153X	1/16W 15K	1	
R8263	ERJ2GEJ823X	1/16W 82K	1	
R8264	ERJ2GEJ153X	1/16W 15K	1	
R8311	ERJ2RHD242X	1/16W 2.4K	1	
R8312	ERJ2RHD102X	1/16W 1K	1	
R8313	ERJ2RHD912X	1/16W 9.1K	1	
R8314	ERJ2GEJ511X	1/16W 510	1	
R8321	ERJ3RED680V	1/10W 68	1	
R8322	ERJ3GEY0R00V	1/10W 0	1	
R8325	ERJ3RED680V	1/10W 68	1	
R8326	ERJ3GEY0R00V	1/10W 0	1	
R8331	ERJ3RED680V	1/10W 68	1	
R8332	ERJ3GEY0R00V	1/10W 0	1	
R8335	ERJ3RED680V	1/10W 68	1	
R8341	ERJ3RED680V	1/10W 68	1	
R8401	ERJ2GEJ101X	1/16W 100	1	
R8420	ERJ2GEJ222X	1/16W 2.2K	1	
R8421	ERJ2GE0R00X	1/16W 0	1	
R8531	ERJ2GEJ152X	1/16W 1.5K	1	
R8532	ERJ2GEJ222X	1/16W 2.2K	1	
R8533	ERJ2GE0R00X	1/16W 0	1	
R8541	ERJ2GEJ153X	1/16W 15K	1	
R8551	ERJ2GE0R00X	1/16W 0	1	
R8552	ERJ2GEJ102X	1/16W 1K	1	
R8553	ERJ2GEJ102X	1/16W 1K	1	
R8554	ERJ2GEJ680X	1/16W 68	1	
R8555	ERJ2GEJ2R2X	1/16W 2.2	1	
R8556	ERJ3GEYJ560V	1/10W 56	1	
R8557	ERJ3GEYJ510V	1/10W 51	1	
R8558	ERJ2GEJ473X	1/16W 47K	1	
R8559	ERJ2GEJ153X	1/16W 15K	1	
R8561	ERJ2GE0R00X	1/16W 0	1	
R8562	ERJ2GEJ102X	1/16W 1K	1	
R8563	ERJ2GEJ102X	1/16W 1K	1	
R8564	ERJ2GEJ220X	1/16W 22	1	
R8565	ERJ2GEJ2R2X	1/16W 2.2	1	
R8566	ERJ3GEYJ560V	1/10W 56	1	
R8567	ERJ3GEYJ510V	1/10W 51	1	
R8568	ERJ2GEJ473X	1/16W 47K	1	
R8601	ERJ2GEJ104X	1/16W 100K	1	
R8611	ERJ2GEJ101X	1/16W 100	1	
R8621	ERJ2GEJ105X	1/16W 1M	1	
R8622	ERJ2RHD391X	1/16W 390	1	
RX3901	D1H410120001	RESISTOR-RESISTOR	1	
RX8001	D1H410320002	RESISTOR-RESISTOR	1	
RX8011	D1H88204A024	RESISTOR-RESISTOR	1	
RX8012	D1H88204A024	RESISTOR-RESISTOR	1	
RX8013	D1H88204A024	RESISTOR-RESISTOR	1	
RX8014	D1H88204A024	RESISTOR-RESISTOR	1	
RX8015	D1H88204A024	RESISTOR-RESISTOR	1	
RX8016	D1H88204A024	RESISTOR-RESISTOR	1	
RX8017	D1H88204A024	RESISTOR-RESISTOR	1	
RX8018	D1H422020001	RESISTOR-RESISTOR	1	
RX8019	D1H422020001	RESISTOR-RESISTOR	1	
RX8020	D1H422020001	RESISTOR-RESISTOR	1	
RX8031	D1H447220001	RESISTOR-RESISTOR	1	
RX8032	D1H447220001	RESISTOR-RESISTOR	1	
RX8111	D1H422320002	RESISTOR-RESISTOR	1	
RX8401	D1H410120001	RESISTOR-RESISTOR	1	
RX8402	D1H410120001	RESISTOR-RESISTOR	1	
RX8403	D1H410120001	RESISTOR-RESISTOR	1	
RX8531	D1H456020001	RESISTOR-RESISTOR	1	
RX8532	D1H85604A024	RESISTOR-RESISTOR	1	
RX8533	D1H456020001	RESISTOR-RESISTOR	1	
RX8534	D1H456020001	RESISTOR-RESISTOR	1	
RX8611	D1H447220001	RESISTOR-RESISTOR	1	
RX8691	D1H410320002	RESISTOR-RESISTOR	1	

Ref. No.	Part No.	Part Name & Description	Pcs	Remarks
RX8701	D1H84714A024	RESISTOR-RESISTOR	1	
RX8702	D1H84714A024	RESISTOR-RESISTOR	1	
S2601	K0L1BA000078	SWITCH	1	
S2602	K0L1BA000078	SWITCH	1	
S6151	EVQ11G05R	SWITCH	1	
S6152	EVQ11G05R	SWITCH	1	
S6161	EVQ11G05R	SWITCH	1	
S6162	EVQ11G05R	SWITCH	1	
S6171	EVQ11G05R	SWITCH	1	
S6172	EVQ11G05R	SWITCH	1	
T1021	G4D2A0000265	TRANSFORMER	1	⚠
VA1002	ERZVA5Z471	TRANSIENT/SURGE ABSORBER	1	⚠
VA3901	EZJZ0V80008B	VARIABLE RESISTOR	1	
VA3902	EZJZ0V80008B	VARIABLE RESISTOR	1	
VA3903	EZJZ0V80008B	VARIABLE RESISTOR	1	
VA3904	EZJZ0V80008B	VARIABLE RESISTOR	1	
VA3905	EZJZ0V80008B	VARIABLE RESISTOR	1	
VA3906	EZJZ0V80008B	VARIABLE RESISTOR	1	
VA3907	EZJZ0V80008B	VARIABLE RESISTOR	1	
VA3908	EZJZ0V80008B	VARIABLE RESISTOR	1	
VA3910	EZJZ0V800AA	VARIABLE RESISTOR	1	
VA3911	EZJZ0V800AA	VARIABLE RESISTOR	1	
VA3912	EZJZ0V800AA	VARIABLE RESISTOR	1	
VA3913	EZJZ0V800AA	VARIABLE RESISTOR	1	
W9	ERJ3GEY0R00V	1/20W 0	1	
W10	ERJ3GEY0R00V	1/20W 0	1	
W11	ERJ3GEY0R00V	1/20W 0	1	
W12	ERJ3GEY0R00V	1/20W 0	1	
W13	ERJ3GEY0R00V	1/20W 0	1	
W14	ERJ3GEY0R00V	1/20W 0	1	
W220	ERJ3GEY0R00V	1/20W 0	1	
W221	ERJ3GEY0R00V	1/20W 0	1	
W222	ERJ3GEY0R00V	1/20W 0	1	
W223	ERJ3GEY0R00V	1/20W 0	1	
W224	ERJ3GEY0R00V	1/20W 0	1	
W225	ERJ3GEY0R00V	1/20W 0	1	
W226	ERJ3GEY0R00V	1/20W 0	1	
W227	ERJ3GEY0R00V	1/20W 0	1	
W228	ERJ3GEY0R00V	1/20W 0	1	
W229	ERJ3GEY0R00V	1/20W 0	1	
W230	ERJ3GEY0R00V	1/20W 0	1	
W231	ERJ3GEY0R00V	1/20W 0	1	
W232	ERJ3GEY0R00V	1/20W 0	1	
W233	ERJ3GEY0R00V	1/20W 0	1	
W234	ERJ3GEY0R00V	1/20W 0	1	
W235	ERJ3GEY0R00V	1/20W 0	1	
W236	ERJ3GEY0R00V	1/20W 0	1	
W237	ERJ3GEY0R00V	1/20W 0	1	
W238	ERJ3GEY0R00V	1/20W 0	1	
W239	ERJ3GEY0R00V	1/20W 0	1	
W240	ERJ3GEY0R00V	1/20W 0	1	
W241	ERJ3GEY0R00V	1/20W 0	1	
W242	ERJ3GEY0R00V	1/20W 0	1	
W243	ERJ3GEY0R00V	1/20W 0	1	
W244	ERJ3GEY0R00V	1/20W 0	1	
W245	ERJ3GEY0R00V	1/20W 0	1	
W246	ERJ3GEY0R00V	1/20W 0	1	
W247	ERJ3GEY0R00V	1/20W 0	1	
W248	ERJ3GEY0R00V	1/20W 0	1	
W249	ERJ3GEY0R00V	1/20W 0	1	
W250	ERJ3GEY0R00V	1/20W 0	1	
W253	ERJ3GEY0R00V	1/20W 0	1	
W256	ERJ3GEY0R00V	1/20W 0	1	
W257	ERJ3GEY0R00V	1/20W 0	1	
W258	ERJ3GEY0R00V	1/20W 0	1	
W263	ERJ3GEY0R00V	1/10W 0	1	
W264	ERJ3GEY0R00V	1/10W 0	1	

Ref. No.	Part No.	Part Name & Description	Pcs	Remarks
X6001	H2D800400009	CERAMIC OSCILLATOR	1	
X8621	H0J270500080	CRYSTAL OSCILLECTOR	1	
ZA1001	EYF52BCY	FUSE BRACKET	1	
ZA1002	EYF52BCY	FUSE BRACKET	1	
ZA1111	RMCC0001-1	EARTH SPRING	1	
ZA1112	K4CZ01000027	TERMINAL	1	
ZA4751	K4CZ01000027	TERMINAL	1	
ZA4754	RMCC0027	TERMINAL	1	