ORDER NO.CHM0608042CE

Service Manual

DVD Player

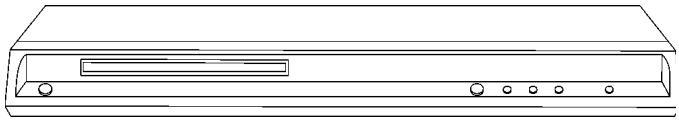

DVD-S325EE
DVD-S325GC
DVD-S325GCA
DVD-S325GCS
DVD-S325GCU

DL4.5 Mechanism Series

Color

(S).....Silver Type

Specifications

Power supply: AC230 V, 50 Hz (DVD-S325EE)
AC110-240 V, 50/60 Hz (DVD-S325GC/GCA/GCS/GCU)

Power consumption: 9 W (DVD-S325EE)
8 W (DVD-S325GC/GCA/GCS/GCU)

Power consumption in standby mode: approx. 1 W

Dimensions: 430 (W) × 251 (D) × 43 (H) mm

Mass: 2.2 kg (approx.)

Signal system: PAL 625/50, PAL 525/60, NTSC

Operating temperature range: + 5 to + 35 °C

Operating humidity range: 5 to 90 % RH (no condensation)

Discs played [8 cm (3") or 12 cm (5")]:

(1) DVD (DVD-Video, DivX*5,6)

(2) DVD-R (DVD-Video, MP3*2,6, JPEG*3,6, MPEG4/ASF*4,6, DivX*5,6)

(3) DVD-R DL (DVD-Video)

(4) DVD-RW (DVD-Video, MP3*2,6, JPEG*3,6, MPEG4/ASF*4,6, DivX*5,6)

(5) +R/+RW (Video)

(6) +R DL (Video)

(7) CD, CD-R/RW (CD-DA, Video CD, SVCD*1, MP3*2,6, JPEG*3,6, MPEG4*4,6, DivX*5,6)

*1 Conforming to IEC62107

*2 MPEG-1 Layer 3, MPEG-2 Layer 3

*3 Exif Ver2.1 JPEG Baseline files
Picture resolution: between 320 × 240 and 6144 × 4096 pixels (Sub sampling is 4:2:2 or 4:2:0)

*4 MPEG4 data recorded with the Panasonic SD multi cameras or DVD video recorders
Conforming to SD VIDEO specifications (ASF standard)/MPEG4 (Simple Profile) video system/G.726 audio system

*5 DivX 3.11, 4.x, 5.x
GMC (Global Motion Compensation) not supported.

*6 The total combined maximum number of recognizable audio, picture and video contents and groups: 1000 audio, picture and video contents and 256 groups.

Video output:

Output level: 1 Vp-p (75 Ω)

Output terminal: Pin jack (1 system)/AV (DVD-S325EE)
Pin jack (1 system) (DVD-S325GC/GCA/GCS/GCU)

S video output:

Y output level: 1 Vp-p (75 Ω)

C output level: NTSC: 0.286 Vp-p (75 Ω)
PAL: 0.300 Vp-p (75 Ω)

Output terminal: AV (DVD-S325EE)

Panasonic®

© 2006 Matsushita Electric Industrial CO., Ltd. All rights reserved. Unauthorized copying and distribution is a violation of law.

	S terminal (1 system)
	(DVD-S325GC/GCA/GCS/GCU)
Component video output:	[NTSC: 525(480)p/525(480)i,
	PAL: 625(576)p/625(576)i]
Y output level:	1 Vp-p (75 Ω)
P_B output level:	0.7 Vp-p (75 Ω)
P_R output level:	0.7 Vp-p (75 Ω)
Output terminal:	Pin jack (Y: green, P_B : blue,
	P_R : red)
Number of terminals:	1 system
RGB video output:	(DVD-S325EE)
R output level:	0.7 Vp-p (75 Ω)
G output level:	0.7 Vp-p (75 Ω)
B output level:	0.7 Vp-p (75 Ω)
Output terminal:	AV
Video performance:	
Horizontal resolution:	More than 500 lines
Video S/N ratio:	More than 65dB
Audio output:	
Output level:	2 Vrms (1 kHz, 0 dB)
Output terminal:	Pin jack/AV
	(DVD-S325EE)
	Pin jack
	(DVD-S325GC/GCA/GCS/GCU)
Number of terminals:	
2 channel:	1 system
Audio performance:	
(1) Frequency response:	
l DVD (linear audio):	4 Hz-22 kHz (48 kHz sampling)
	4 Hz-44 kHz (96 kHz sampling)
l CD audio:	4 Hz-20 kHz
(2) S / N ratio:	
l CD audio:	115 dB
(3) Dynamic range:	
l DVD (linear audio):	92 dB
l CD audio:	90 dB
(4) Total harmonic distortion:	
l CD audio:	0.003 %
Digital audio output:	
Coaxial digital output:	Pin jack
Pickup	
Wave length:	653 nm/790 nm
Laser power:	CLASS 1/CLASS 1M

Note:

Specifications are subject to change without notice.

Mass and dimensions are approximate.

Solder:

This model uses lead free solder (PbF).

Manufactured under license from Dolby Laboratories. “Dolby” and the double-D symbol are trademarks of Dolby Laboratories.

“DTS” and “DTS Digital Out” are trademarks of Digital Theater Systems, Inc.

This product incorporates copyright protection technology that is protected by method claims of certain U.S. patents and other intellectual property rights owned by Macrovision Corporation and other rights owners. Use of this copyright protection technology must be authorized by Macrovision Corporation, and is intended for home and other limited viewing uses only unless otherwise authorized by Macrovision Corporation. Reverse engineering or disassembly is prohibited.

MPEG Layer-3 audio decoding technology licensed from Fraunhofer IIS and Thomson multimedia.

This product is licensed under the MPEG-4 Visual patent portfolio license for the personal and non-commercial use of a consumer for (i) encoding video in compliance with the MPEG-4 Visual Standard (“MPEG-4 Video”) and/or (ii) decoding MPEG-4 Video that was encoded by a consumer engaged in a personal and non-commercial activity and/or was obtained from a video provider licensed by MPEG LA to provide MPEG-4 Video. No license is granted or shall be implied for any other use. Additional information including that relating to promotional, internal and commercial uses and licensing may be obtained from MPEG LA, LLC. See http://www.mpegla.com.

Official DivX® Certified product.
Plays all versions of DivX® video (including DivX®6) with standard playback of DivX® media files. DivX, DivX Certified, and associated logos are trademarks of DivX, Inc. and are used under license.

⚠ WARNING

This service information is designed for experienced repair technicians only and is not designed for use by the general public.
It does not contain warnings or cautions to advise non-technical individuals of potential dangers in attempting to service a product.
Products powered by electricity should be serviced or repaired only by experienced professional technicians. Any attempt to service or repair the product or products dealt with in this service information by anyone else could result in serious injury or death.

CONTENTS

Page

1 IMPORTANT SERVICE INFORMATION ---- **4**
1.1. Notes ---- 4
1.2. About DivX ---- 4
1.3. Manual for Customer ---- 5
2 SAFETY PRECAUTIONS ---- **6**
2.1. GENERAL GUIDELINES ---- 6
3 PREVENTION OF ELECTRO STATIC DISCHARGE (ESD) TO ELECTROSTATICALLY SENSITIVE (ES) DEVICES ---- **6**
4 PRECAUTION OF LASER DIODE ---- **7**
5 SERVICE CAUTION BASED ON LEGAL RESTRICTIONS ---- **7**
5.1. General description about Lead Free Solder (PbF) ---- 7
6 PREVENTION OF STATIC ELECTRICITY DISCHARGE ---- **9**
6.1. Grounding for electrostatic breakdown prevention ---- 9
6.2. Handling Precautions for Traverse Unit (Optical Pickup) ---- 9
7 DISASSEMBLING THE CASING AND CHECKING P.C.B.S ---- **10**
7.1. Disassembly Procedure ---- 10
7.2. Casing Parts and P.C.B. Positions ---- 10
7.3. Top Panel ---- 11
7.4. Front Panel ---- 11
7.5. Operation P.C.B. and Power SW P.C.B. ---- 11
7.6. Module P.C.B. ---- 11
7.7. Mechanism Unit ---- 11
7.8. Rear panel ---- 12
7.9. Mother P.C.B. ---- 12

7.10. Service Position ---- 13
8 ASSEMBLING AND DISASSEMBLING THE MECHANISM UNIT ---- 14
8.1. Disassembly Procedure ---- 14
8.2. Traverse Unit ---- 14
8.3. Tray ---- 15
8.4. Loading section ---- 16
8.5. Loading motor P.C.B. ---- 17
8.6. TRV Unit ---- 18
9 SELF-DIAGNOSIS FUNCTION AND SERVICE MODES ---- 21
9.1. Optical Pickup Breakdown Diagnosis ---- 21
9.2. Service Mode Table 1 ---- 22
9.3. DVD Self Diagnostic Function-Error Code ---- 22
9.4. Last Error Code saved during NO PLAY ---- 23
9.5. Service mode table 2 ---- 24
9.6. Sales demonstration lock function ---- 27
9.7. Handling After Completing Repairs ---- 27
10 SERVICE PRECAUTIONS ---- 28
10.1. Recovery after the DVD player is repaired. ---- 28
10.2. Firmware version-up of the DVD player ---- 28
11 ADJUSTMENT PROCEDURES ---- 29
11.1. Service Tools and Equipment ---- 29
11.2. Important points in electrical adjustment ---- 29
11.3. Storing and Handling Test Discs ---- 29
12 ABBREVIATIONS ---- 30
13 VOLTAGE CHART ---- 32
13.1. MOTHER P.C.B. ---- 32
13.2. MODULE P.C.B. ---- 33
14 BLOCK DIAGRAM ---- 35
14.1. OVERALL BLOCK DIAGRAM ---- 35
14.2. POWER SUPPLY BLOCK DIAGRAM ---- 36
14.3. SERVO BLOCK DIAGRAM ---- 37
14.4. VIDEO BLOCK DIAGRAM (DVD-S325EE) ---- 38
14.5. VIDEO BLOCK DIAGRAM (DVD-S325GC/GCA/GCS/GCU) ---- 40
14.6. AUDIO BLOCK DIAGRAM ---- 41
15 INTERCONNECTION SCHEMATIC DIAGRAM & SCHEMATIC DIAGRAM NOTES ---- 43
15.1. INTERCONNECTION SCHEMATIC DIAGRAM ---- 43
15.2. SCHEMATIC DIAGRAM NOTES ---- 44
16 SCHEMATIC DIAGRAM ---- 45
16.1. POWER SUPPLY SECTION (MOTHER P.C.B. (1 / 2)) SCHEMATIC DIAGRAM ---- 45
16.2. FRONT & AV OUT SECTION (MOTHER P.C.B. (2 / 2)) SCHEMATIC DIAGRAM (DVD-S325EE) ---- 46
16.3. FRONT & AV OUT SECTION (MOTHER P.C.B. (2 / 2)) SCHEMATIC DIAGRAM (DVD-S325GC/GCA/GCS/GCU) ---- 49
16.4. MODULE SCHEMATIC DIAGRAM ---- 52
17 PRINT CIRCUIT BOARD ---- 55
17.1. MOTHER P.C.B. (DVD-S325EE) ---- 55
17.2. MOTHER P.C.B. ADDRESS INFORMATION (DVD-S325EE) ---- 56
17.3. MOTHER P.C.B. (DVD-S325GC/GCA/GCS/GCU) ---- 57
17.4. MOTHER P.C.B. ADDRESS INFORMATION (DVD-S325GC/GCA/GCS/GCU) ---- 58
17.5. MODULE P.C.B. (1/2) ---- 59
17.6. MODULE P.C.B. (2/2) ---- 60
17.7. MODULE P.C.B. ADDRESS INFORMATION ---- 61
18 EXPLODED VIEWS ---- 63
18.1. CASING PARTS & MECHANISM SECTION EXPLODED VIEW ---- 63
18.2. MECHANISM SECTION EXPLODED VIEW ---- 64
18.3. PACKING & ACCESSORIES SECTION EXPLODED VIEW ---- 65
19 REPLACEMENT PARTS LIST ---- 66

1 IMPORTANT SERVICE INFORMATION

1.1. Notes

When you replace FLASH-ROM or exchange MODULE P.C.B., you have to take "Manual for customer" to the customer with unit. (also in the case of unit exchange)

Please take and use "Manual for customer" from below.

1. Come with MODULE P.C.B. or FLASH-ROM (Service part).
2. Make a photocopy section 1.3. "Manual for customer" on this service manual.

"Manual for customer" has important information for "DivX Video-on-Demand Service" user.
Please don´t forget take it to the customer with unit!

1.2. About DivX

1.2.1. DivX

A video compression format developed by DivXNetworks, Inc. that compresses video files without any considerable loss of video quality.

1.2.2. About DivX Video-on-Demand Content

DivX Video-on-Demand (VOD) content is encrypted for copyright protection. In order to play DivX VOD content on this unit, you first need to register the unit.
Follow the on line instructions for purchasing DivX VOD content to enter the unit's registration code and register the unit. For more information about DivX VOD, visit www.divx.com/vod.

Display the unit's registration code

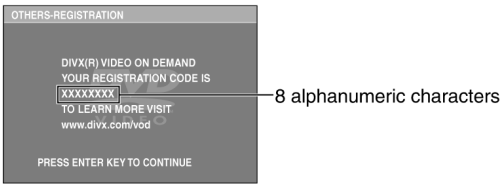

- We recommend that you make a note of this code for future reference.
- After playing DivX VOD content for the first time, another registration code is then displayed in "DivX Registration". Do not use this registration code to purchase DivX VOD content. If you use this code to purchase DivX VOD content, and then play the content on this unit, you will no longer be able to play any content that you purchased using the previous code.
- If you purchase DivX VOD content using a registration code different from this unit's code, you will not be able to play this content. ("AUTHORIZATION ERROR" is displayed.)

Regarding DivX content that can only be played a set number of times

Some DivX VOD content can only be played a set number of times. When you play this content, the remaining number of plays is displayed. You cannot play this content when the number of remaining plays is zero. ("RENTAL EXPIRED" is displayed.)

When playing this content

- The number of remaining plays is reduced by one if
  –you press [⏻] or [SETUP].
  –you press [■]. [Press [❚❚] to stop play.]
  –you press [|◀◀ ▶▶|] or [◀◀ ▶▶] etc. and arrive at another content or the start of the content being played.
- Resume function does not work.

1.3. Manual for Customer

Warning for Customers Who Use the DivX Video-on-Demand content.

1. The registration code has been changed for the repair of the product or the product exchange.

2. Obtain and register a new registration code, otherwise you will no longer be able to play DivX Video-on-Demand content.

3. Follow the procedure on the DivX Video-on-Demand web site to register at http://vod.divx.com/.

* If you do not use the DivX Video-on-Demand content, please ignore this warning.

2 SAFETY PRECAUTIONS

2.1. GENERAL GUIDELINES

1. When servicing, observe the original lead dress. If a short circuit is found, replace all parts which have been overheated or damaged by the short circuit.
2. After servicing, see to it that all the protective devices such as insulation barriers, insulation papers shields are properly installed.
3. After servicing, make the following leakage current checks to prevent the customer from being exposed to shock hazards.

2.1.1. LEAKAGE CURRENT COLD CHECK

1. Unplug the AC cord and connect a jumper between the two prongs on the plug.
2. Measure the resistance value, with an ohmmeter, between the jumpered AC plug and each exposed metallic cabinet part on the equipment such as screwheads, connectors, control shafts, etc. When the exposed metallic part has a return path to the chassis, the reading should be between 1MΩ and 5.2MΩ.
   When the exposed metal does not have a return path to the chassis, the reading must be ∞ .

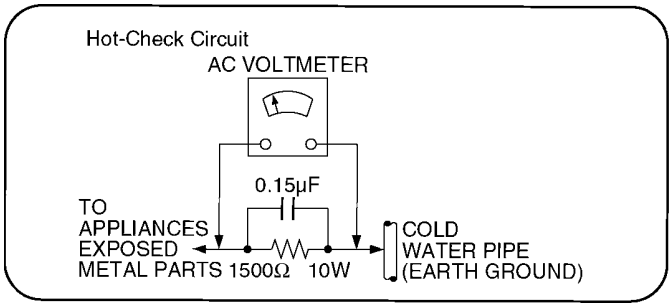

Figure 1

2.1.2. LEAKAGE CURRENT HOT CHECK (See Figure 1 .)

1. Plug the AC cord directly into the AC outlet. Do not use an isolation transformer for this check.
2. Connect a 1.5kΩ, 10 watts resistor, in parallel with a 0.15µF capacitors, between each exposed metallic part on the set and a good earth ground such as a water pipe, as shown in Figure 1.
3. Use an AC voltmeter, with 1000 ohms/volt or more sensitivity, to measure the potential across the resistor.
4. Check each exposed metallic part, and measure the voltage at each point.
5. Reverse the AC plug in the AC outlet and repeat each of the above measurements.
6. The potential at any point should not exceed 0.75 volts RMS. A leakage current tester (Simpson Model 229 or equivalent) may be used to make the hot checks, leakage current must not exceed 1/2 milliamp. In case a measurement is outside of the limits specified, there is a possibility of a shock hazard, and the equipment should be repaired and rechecked before it is returned to the customer.

3 PREVENTION OF ELECTRO STATIC DISCHARGE (ESD) TO ELECTROSTATICALLY SENSITIVE (ES) DEVICES

Some semiconductor (solid state) devices can be damaged easily by static electricity. Such components commonly are called Electrostatically Sensitive (ES) Devices. Examples of typical ES devices are integrated circuits and some field-effect transistors and semiconductor "chip" components. The following techniques should be used to help reduce the incidence of component damage caused by electro static discharge (ESD).

1. Immediately before handling any semiconductor component or semiconductor-equipped assembly, drain off any ESD on your body by touching a known earth ground. Alternatively, obtain and wear a commercially available discharging ESD wrist strap, which should be removed for potential shock reasons prior to applying power to the unit under test.
2. After removing an electrical assembly equipped with ES devices, place the assembly on a conductive surface such as alminum foil, to prevent electrostatic charge build up or exposure of the assembly.
3. Use only a grounded-tip soldering iron to solder or unsolder ES devices.
4. Use only an anti-static solder removal device. Some solder removal devices not classified as "anti-static (ESD protected)" can generate electrical charge sufficient to damage ES devices.
5. Do not use freon-propelled chemicals. These can generate electrical charges sufficient to damage ES devices.
6. Do not remove a replacement ES device from its protective package until immediately before you are ready to install it. (Most replacement ES devices are packaged with leads electrically shorted together by conductive foam, alminum foil or comparable conductive material).
7. Immediately before removing the protective material from the leads of a replacement ES device, touch the protective material to the chassis or circuit assembly into which the device will be installed.

Caution

Be sure no power is applied to the chassis or circuit, and observe all other safety precautions.

8. Minimize bodily motions when handling unpackaged replacement ES devices. (Otherwise hamless motion such as the brushing together of your clothes fabric or the lifting of your foot from a carpeted floor can generate static electricity (ESD) sufficient to damage an ES device).

4 PRECAUTION OF LASER DIODE

CAUTION:

This product utilizes a laser diode with the unit turned “on”, invisible laser radiation is emitted from the pickup lens.
Wave length: 653 nm/790 nm
Maximum output radiation power from pickup: 100 μ W/VDE
Laser radiation from the pickup lens is safety level,but be sure the followings:

1. Do not disassemble the optical pickup unit, since radiation from exposed laser diode is dangerous.
2. Do not adjust the variable resistor on the pickup unit. It was already adjusted.
3. Do not look at the focus lens using optical instruments.
4. Recommend not to look at pickup lens for a long time.

DVD-S325EE

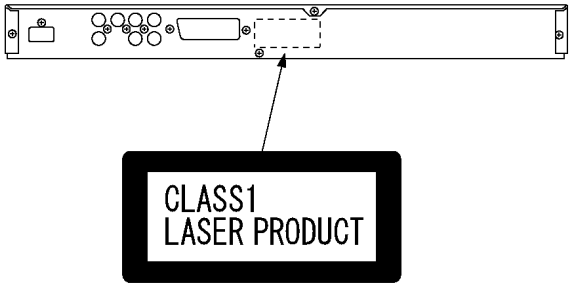

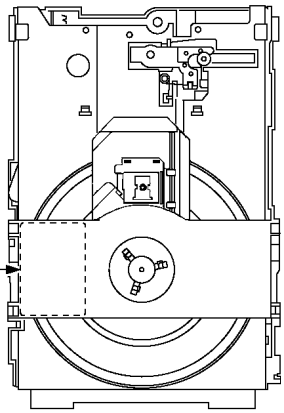

DVD-S325GC/GCA/GCS/GCU

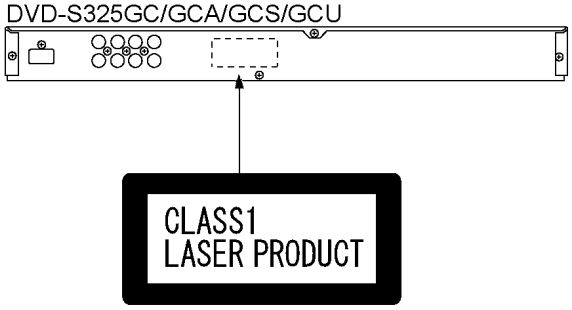

CAUTION!
THIS PRODUCT UTILIZES A LASER.
USE OF CONTROLS OR ADJUSTMENTS OR PERFORMANCE OF PROCEDURES OTHER THAN THOSE SPECIFIED HEREIN MAY RESULT IN HAZARDOUS RADIATION EXPOSURE.

5 SERVICE CAUTION BASED ON LEGAL RESTRICTIONS

5.1. General description about Lead Free Solder (PbF)

The lead free solder has been used in the mounting process of all electrical components on the printed circuit boards used for this equipment in considering the globally environmental conservation.

The normal solder is the alloy of tin (Sn) and lead (Pb). On the other hand, the lead free solder is the alloy mainly consists of tin (Sn), silver (Ag) and Copper (Cu), and the melting point of the lead free solder is higher approx.30°C (86°F) more than that of the normal solder.

Definition of PCB Lead Free Solder being used

The letter of "PbF" is printed either foil side or components side on the PCB using the lead free solder. (See right figure)	PbF

Service caution for repair work using Lead Free Solder (PbF)

- The lead free solder has to be used when repairing the equipment for which the lead free solder is used. (Definition: The letter of “PbF” is printed on the PCB using the lead free solder.)
- To put lead free solder, it should be well molten and mixed with the original lead free solder.
- Remove the remaining lead free solder on the PCB cleanly for soldering of the new IC.
- Since the melting point of the lead free solder is higher than that of the normal lead solder, it takes the longer time to melt the lead free solder.
- Use the soldering iron (more than 70W) equipped with the temperature control after setting the temperature at 350±30°C (662±86°F).

Recommended Lead Free Solder (Service Parts Route.)

The following 3 types of lead free solder are available through the service parts route.

- RFKZ03D01K----------(0.3mm 100g Reel)
- RFKZ06D01K----------(0.6mm 100g Reel)
- RFKZ10D01K----------(1.0mm 100g Reel)

Note

* Ingredient: tin (Sn) 96.5%, silver (Ag) 3.0%, Copper (Cu) 0.5%, Cobalt (Co) / Germanium (Ge) 0.1 to 0.3%

6 PREVENTION OF STATIC ELECTRICITY DISCHARGE

The laser diode in the traverse unit (optical pickup) may brake down due to static electricity of clothes or human body. Use due caution to electrostatic breakdown when servicing and handling the laser diode.

6.1. Grounding for electrostatic breakdown prevention

Some devices such as the DVD player use the optical pickup (laser diode) and the optical pickup will be damaged by static electricity in the working environment. Proceed servicing works under the working environment where grounding works is completed.

6.1.1. Worktable grounding

1. Put a conductive material (sheet) or iron sheet on the area where the optical pickup is placed, and ground the sheet.

6.1.2. Human body grounding

1. Use the anti-static wrist strap to discharge the static electricity form your body.

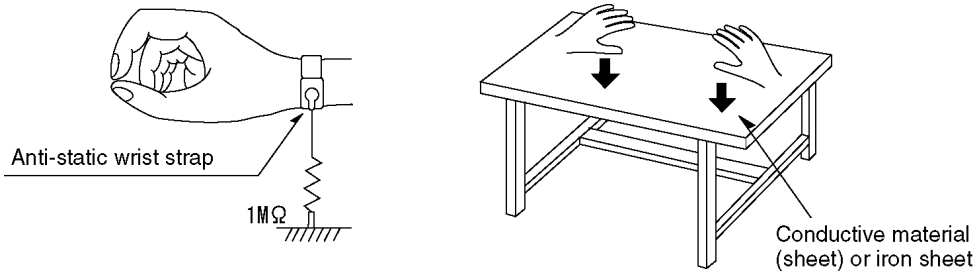

6.1.3. Handling of optical pickup

1. To keep the good quality of the optical pickup maintenance parts during transportation and before installation, the both ends of the laser diode are short-circuited. After replacing the parts with new ones, remove the short circuit according to the correct procedure. (See this Service Manual.)
2. Do not use a tester to check the laser diode for the optical pickup. Failure to do so will damage the laser diode due to the power supply in the tester.

6.2. Handling Precautions for Traverse Unit (Optical Pickup)

1. Do not give a considerable shock to the traverse unit (optical pickup) as it has an extremely high-precise structure.
2. When replacing the optical pickup, install the flexible cable and cut its short land with a nipper. See the optical pickup replacement procedure in this Service Manual. Before replacing the traverse unit, remove the short pin for preventing static electricity and install a new unit. Connect the connector as short times as possible.
3. The flexible cable may be cut off if an excessive force is applied to it. Use caution when handling the cable.
4. The half-fixed resistor for laser power adjustment cannot be adjusted. Do not turn the resistor.

7 DISASSEMBLING THE CASING AND CHECKING P.C.B.S

7.1. Disassembly Procedure

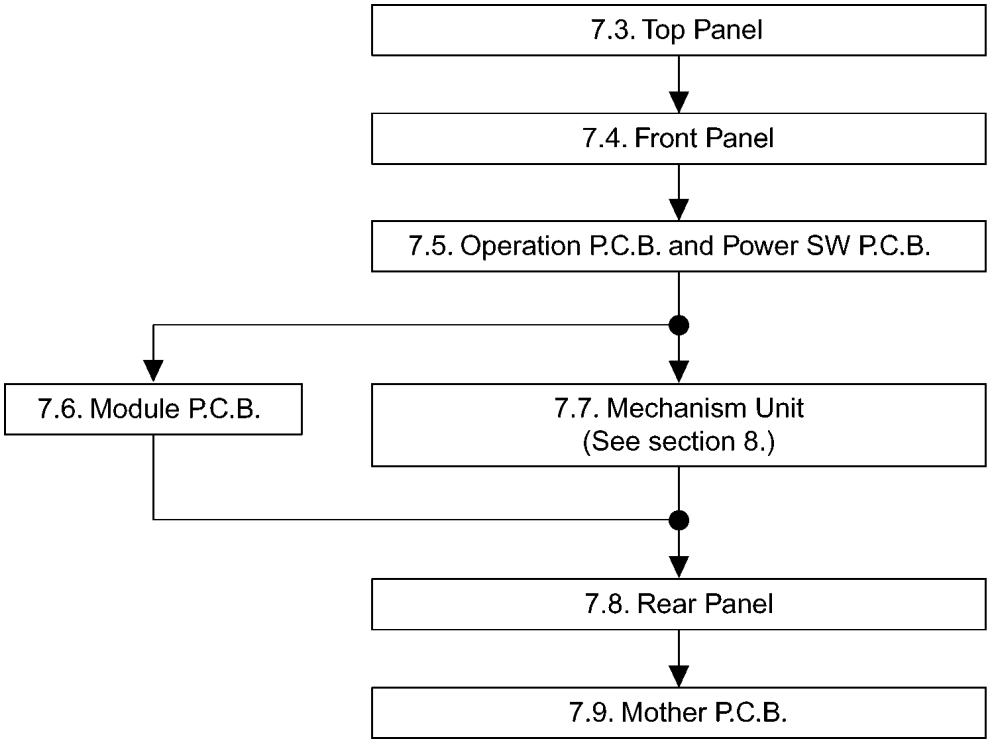

7.2. Casing Parts and P.C.B. Positions

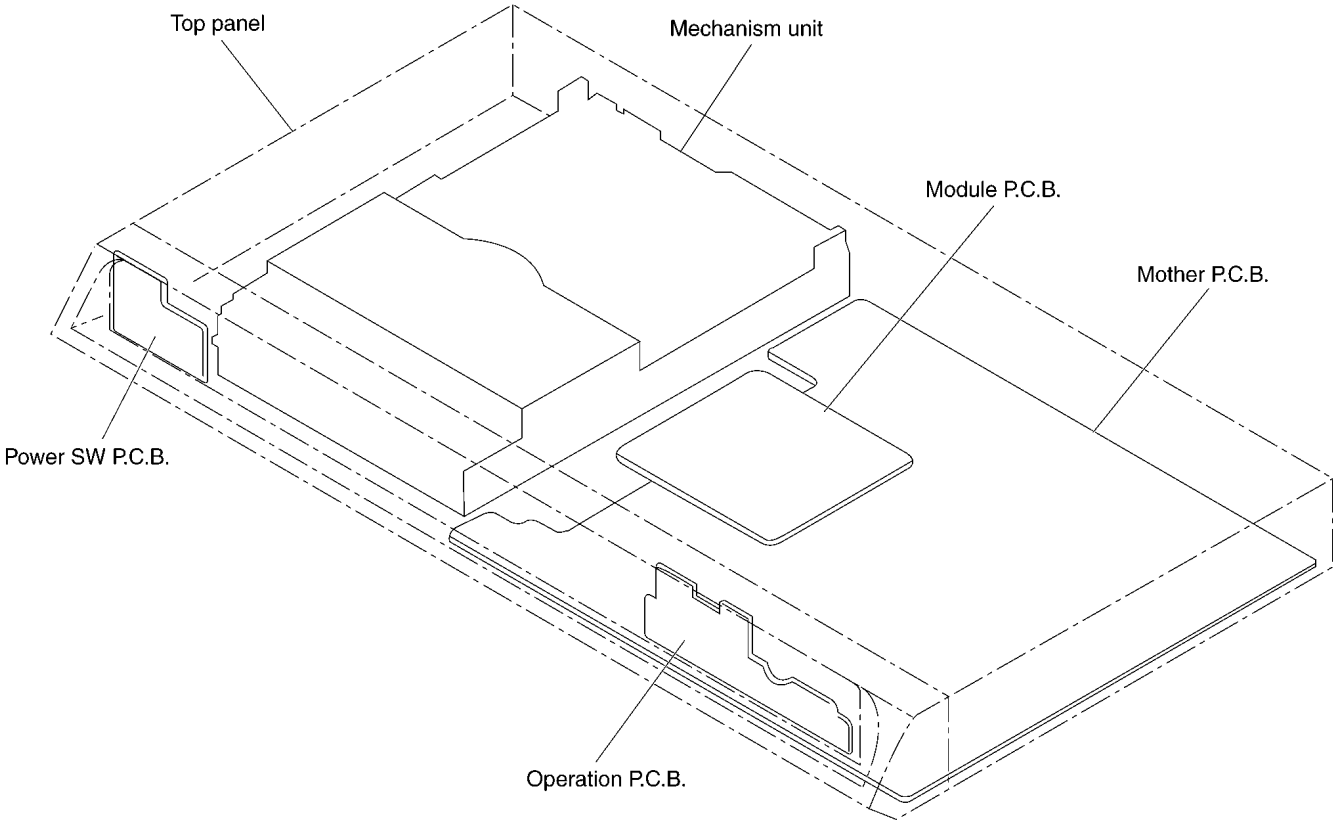

7.3. Top Panel

1. Unscrew the screws.

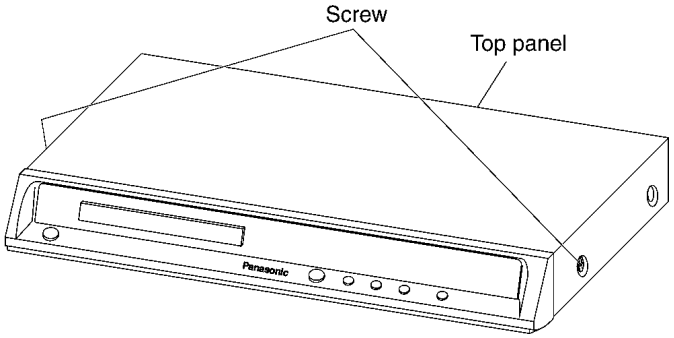

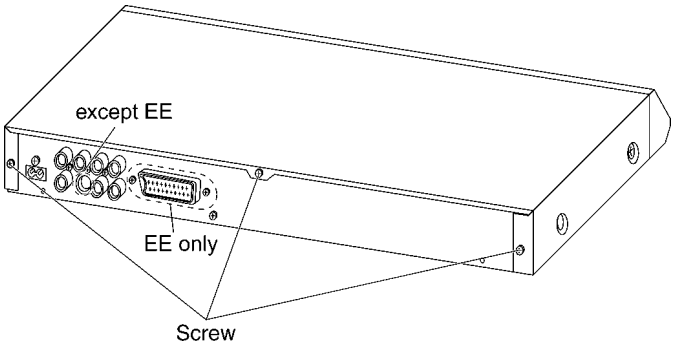

7.4. Front Panel

1. Release the tabs and connector.

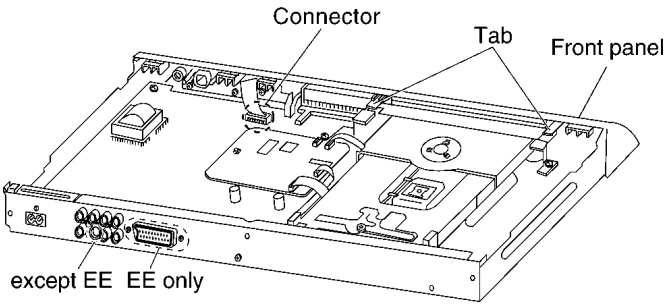

2. Release the tabs.

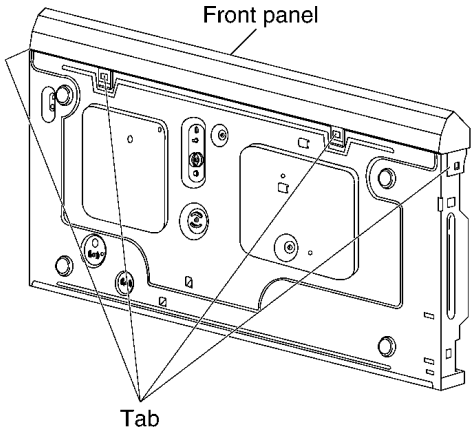

7.5. Operation P.C.B. and Power SW P.C.B.

1. Unscrew the screws.

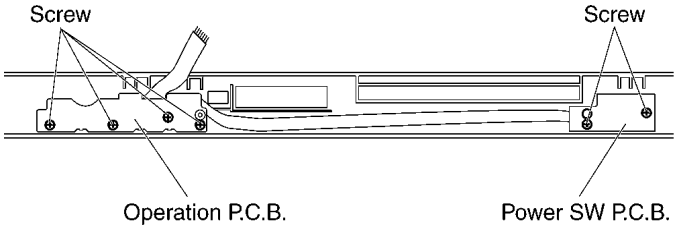

7.6. Module P.C.B.

1. Remove the connectors.
2. Unscrew the screws.
3. Press each tab with the nipper to module P.C.B. vertically.

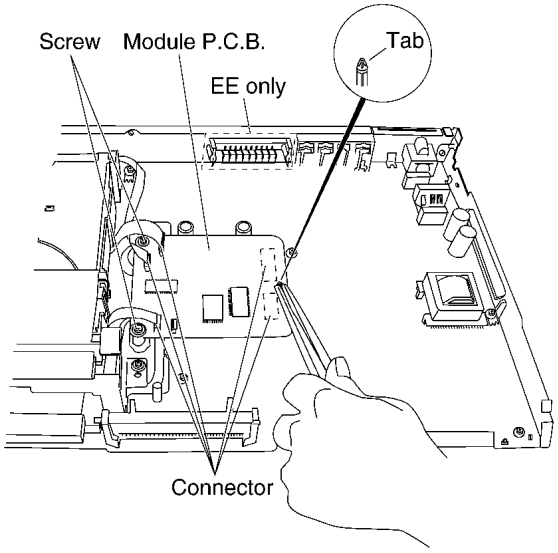

7.7. Mechanism Unit

1. Unscrew the screws.

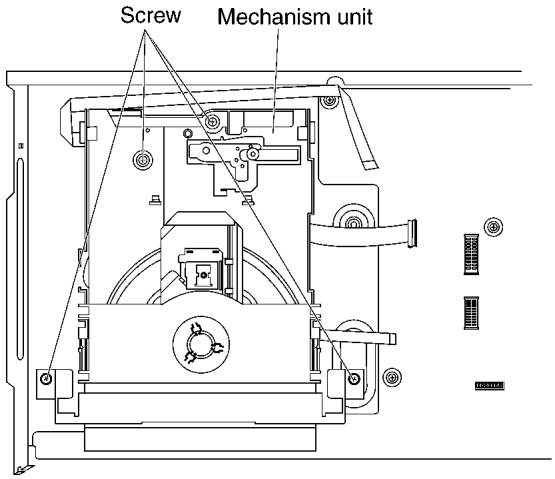

2. Release the tabs.

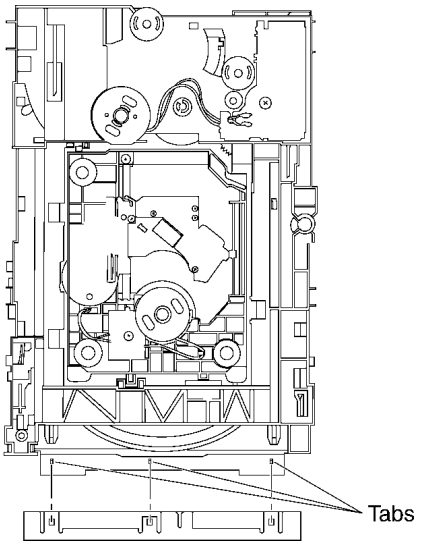

7.8. Rear panel

1. Unscrew the screws.
2. Release the tabs.

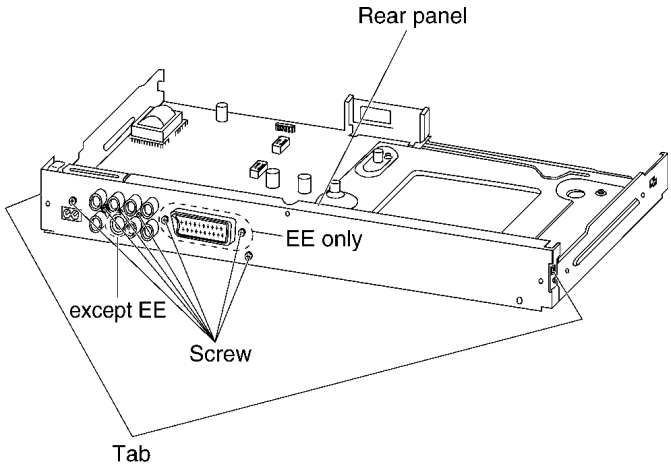

7.9. Mother P.C.B.

1. Unscrew the screws.

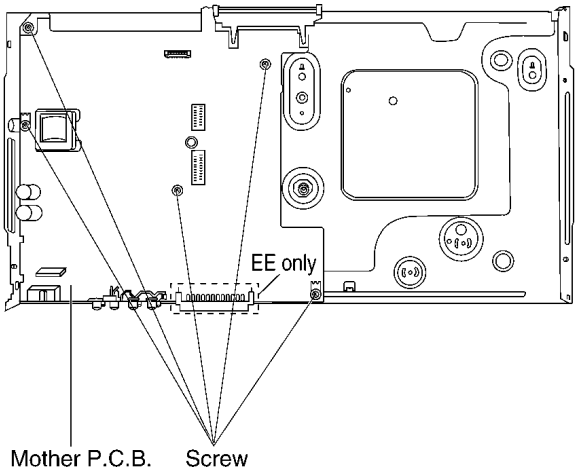

7.10. Service Position

7.10.1. Servicing position of the Module P.C.B.

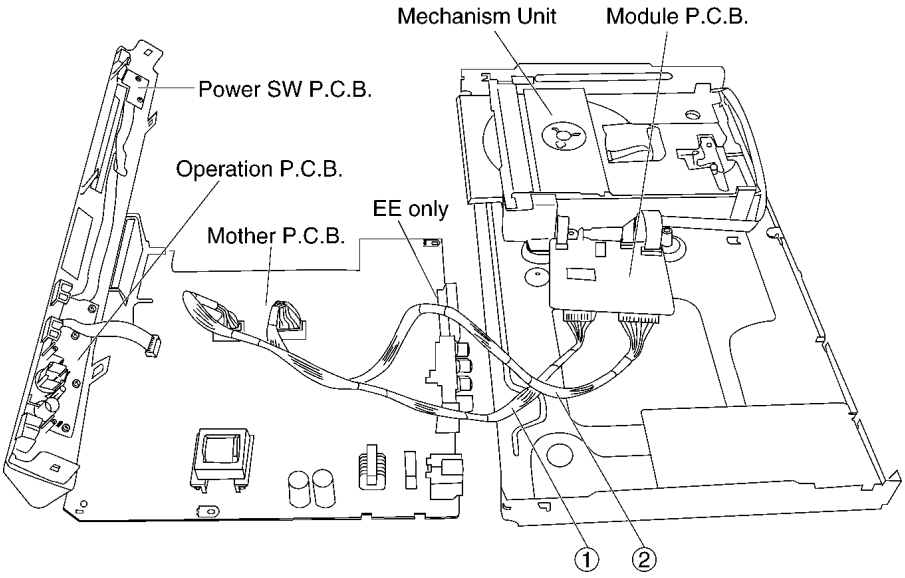

7.10.2. Servicing position of the Mother P.C.B.

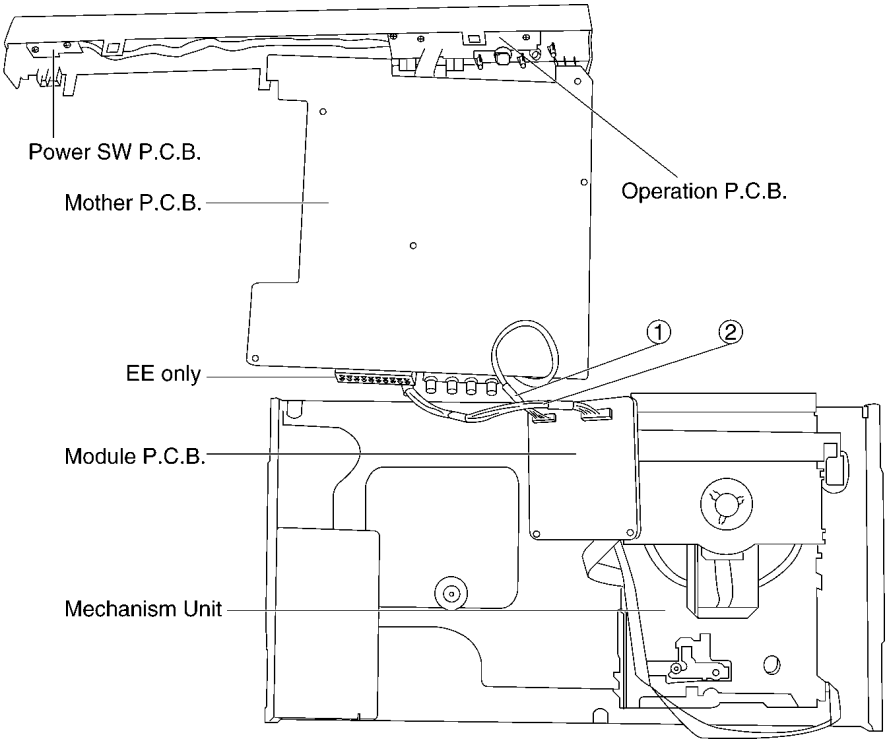

7.10.3. List of the Extension Cables

①	VUC8026	14pins	PS8101(Module P.C.B.) — FP3501(Mother P.C.B.)
②	RFKZ0106	20pins	PS8301(Module P.C.B.) — FP3502(Mother P.C.B.)

8 ASSEMBLING AND DISASSEMBLING THE MECHANISM UNIT

8.1. Disassembly Procedure

Disassembling the exterior part (See section 7.)

↓

8.2. Traverse unit

↓

8.3. Tray

↓

8.4. Loading section

↓

8.5. Loading motor P.C.B.

↓

8.6. TRV unit

8.2. Traverse Unit

1. Slide the lever (A) in the arrow direction (to the opposite side) till it stops.
2. Slide the lever (A) further by bending the tab at the right side of the lever A in the right direction. (The right groove opens and the boss becomes seen.)
3. Open the lever (B) to left. (The 2 grooves at the left side open.)

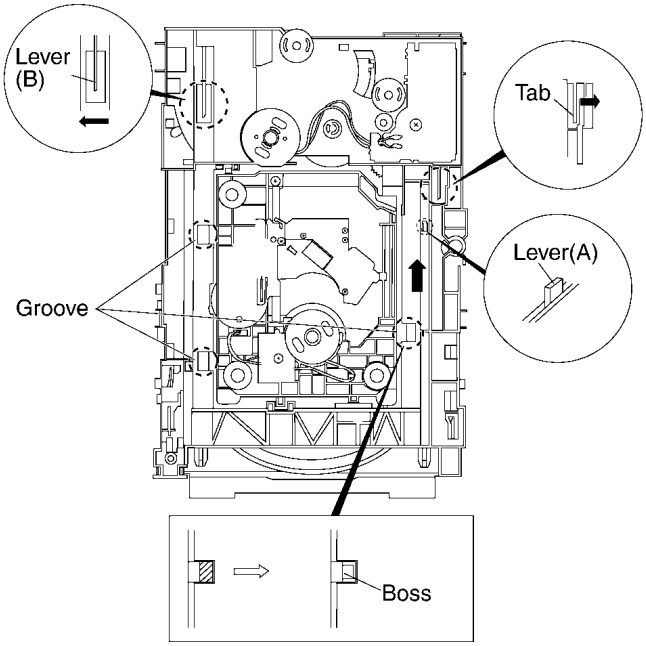

4. Remove the traverse unit.

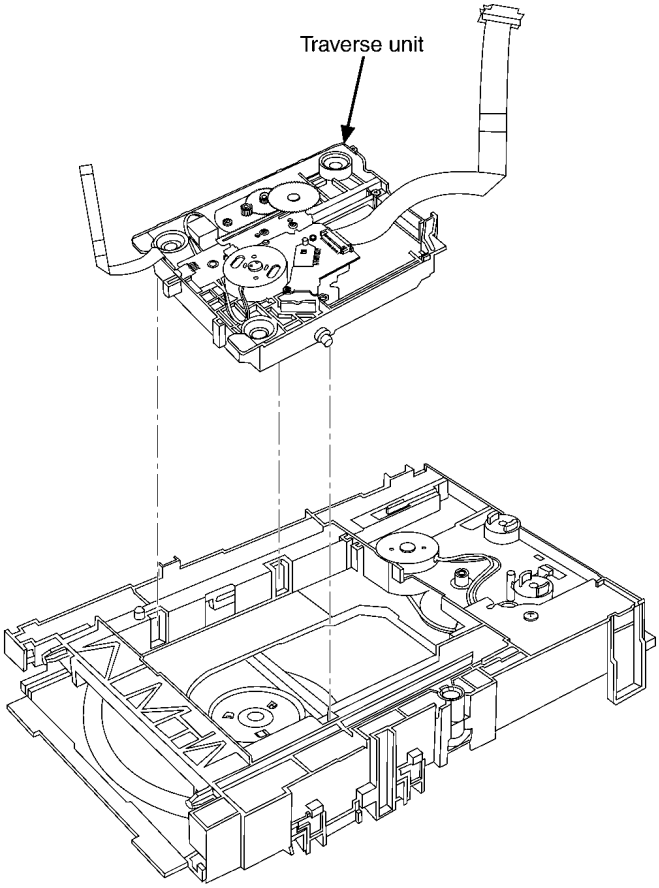

8.3. Tray

1. Slide the guide tray unit while pressing the stopper in the arrow direction, and remove the guide tray unit.

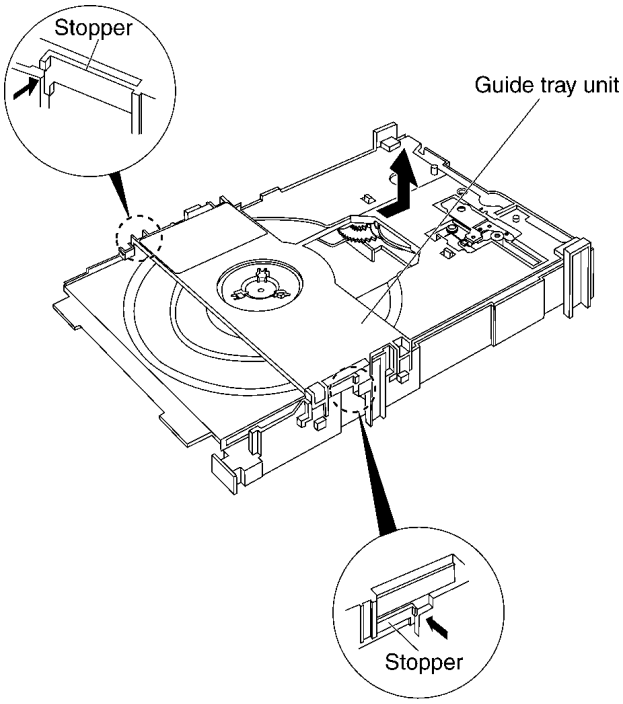

2. Raise the loading unit.
3. Slide the lever in the arrow direction till it stops and pull the tray out.

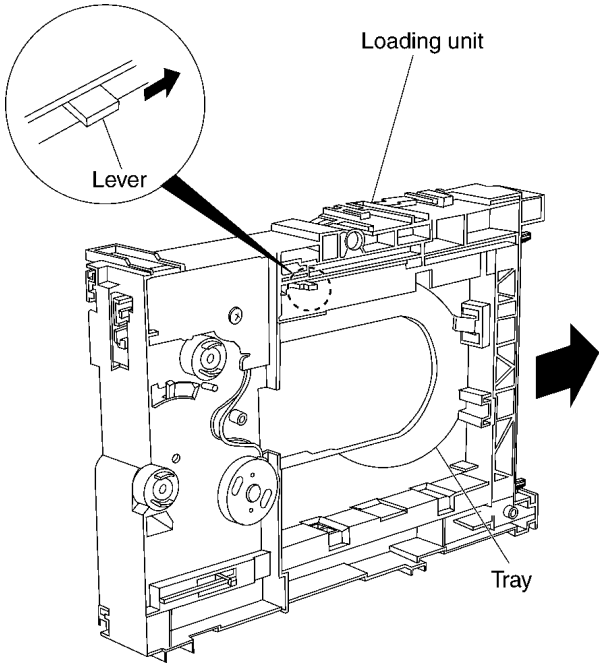

4. Spread the tabs at the both sides and pull the tray out. (The tray slides a little forward and stops.)

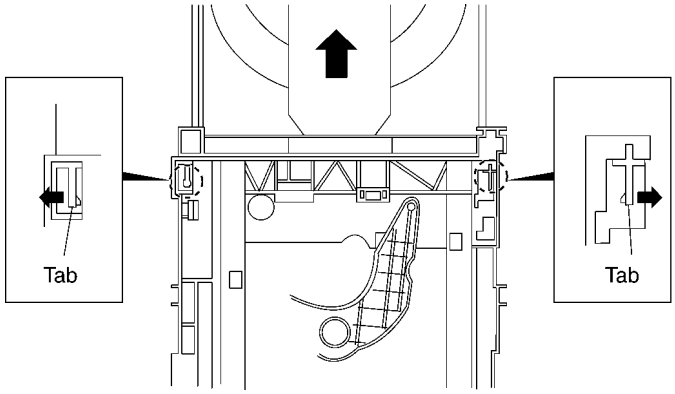

5. Remove the drive arm concave phase from the tray slider and tray.

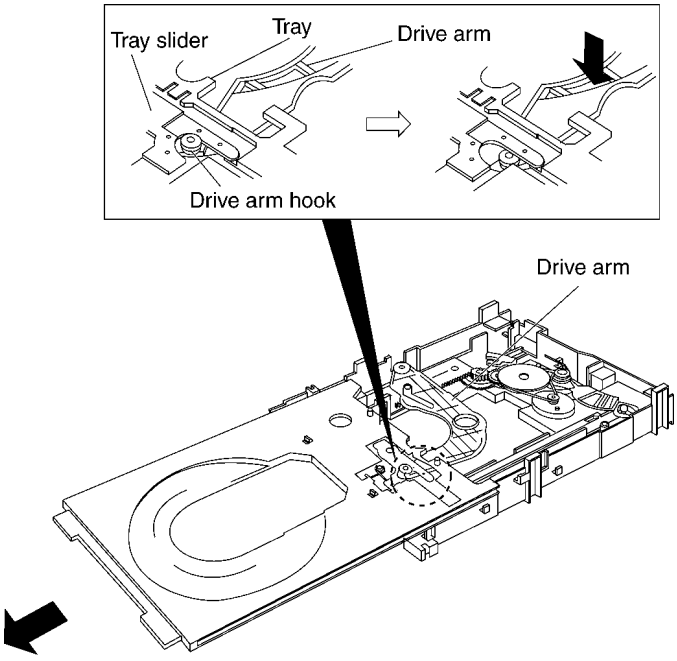

<Assembling the tray unit>

1. Insert a part of the tray into the unit sliding over the groove on the mechanical chassis unit.
2. Insert the tray to the point before the tab of the mechanical chassis unit.

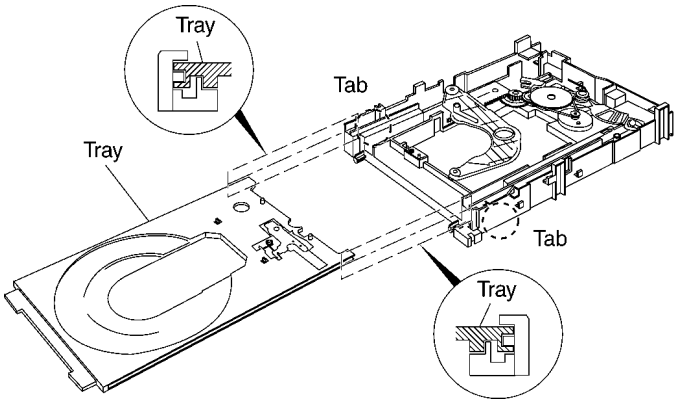

3. Hook the drive arm concave phase over the tray and the tray slider.
4. Press in the tray.

5. Make sure that the tray and the drive arm move smoothly.

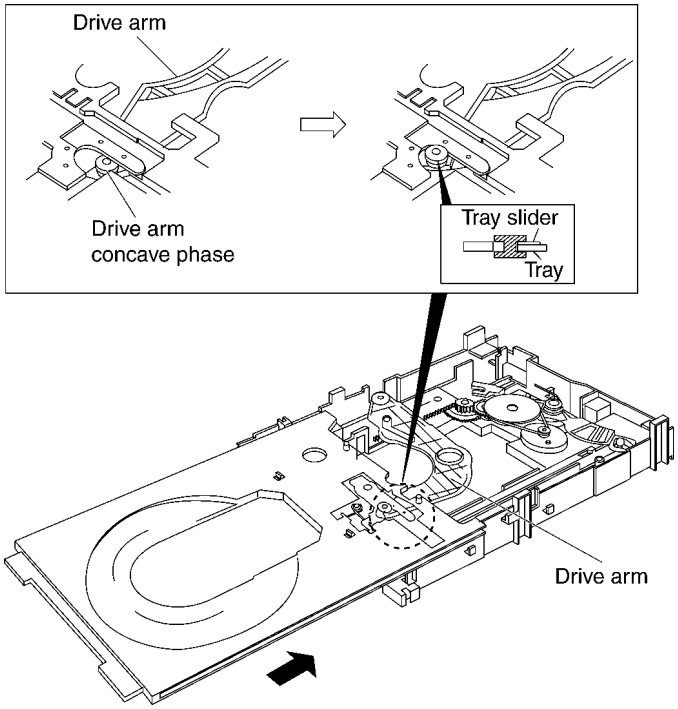

8.4. Loading section

1. Spread the tabs at the both sides and push out the drive arm shaft.

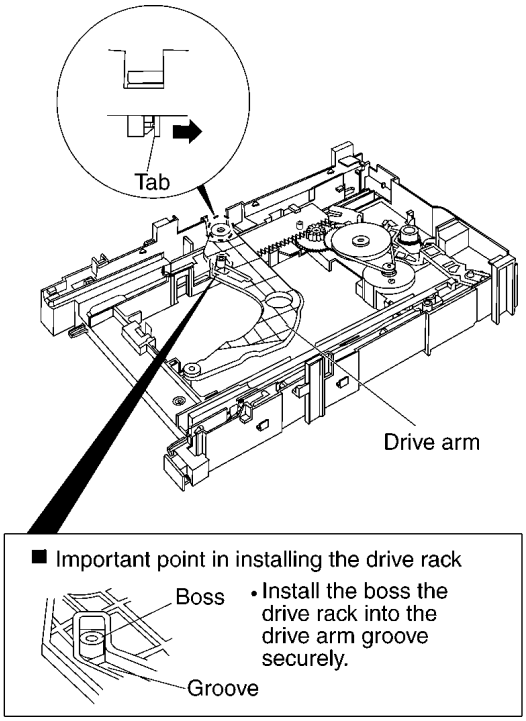

2. Hook the lock lever spring on the lock lever projection part temporarily.
3. Unlock the tab and remove the lock lever.

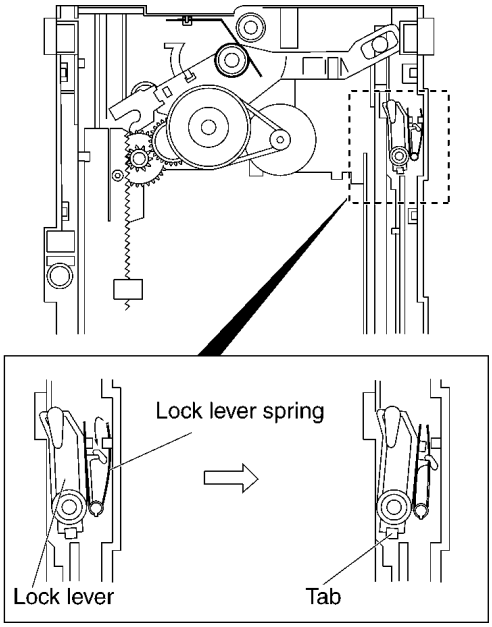

4. Remove the belt.
5. Unlock the tab and remove the pulley.
6. Remove the relay gear.

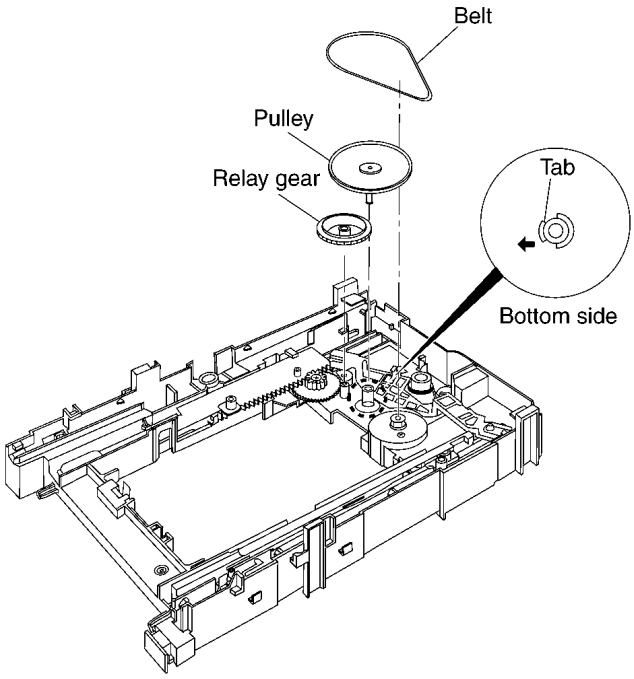

7. Turn the change lever in the arrow direction till it stops.
8. Hook the change lever spring on the change lever project part temporarily.

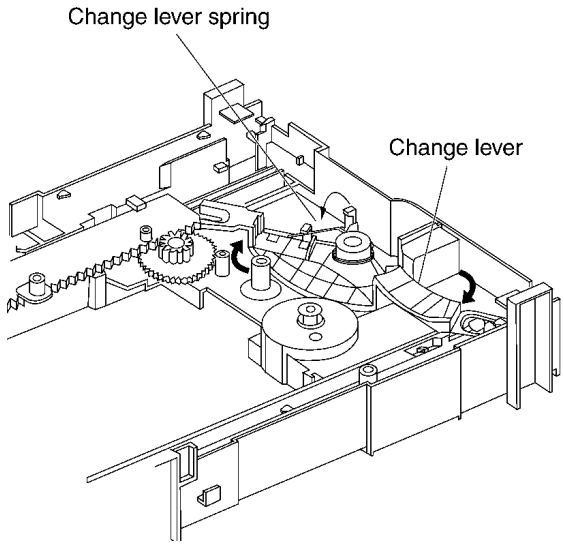

9. Pull the lever (B) in the bottom side to your side and remove the change lever.

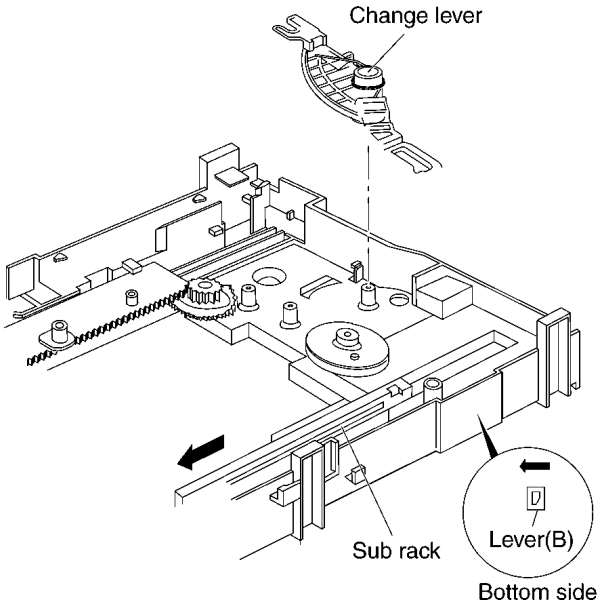

10. Remove the drive rack, the sub rack and the drive gear.

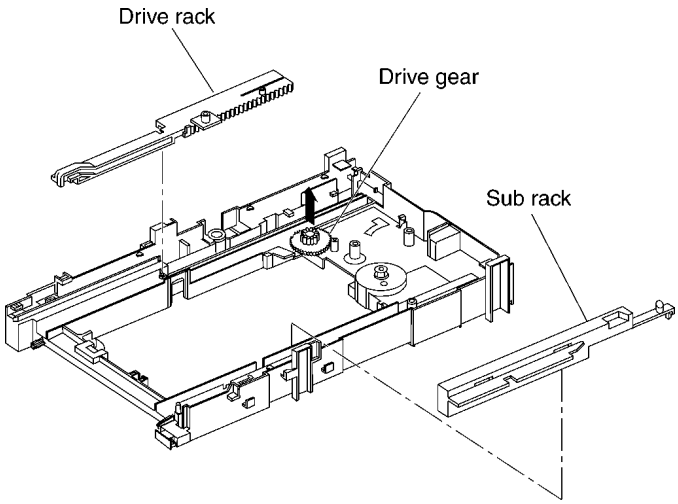

8.5. Loading motor P.C.B.

1. Unscrew the screws.

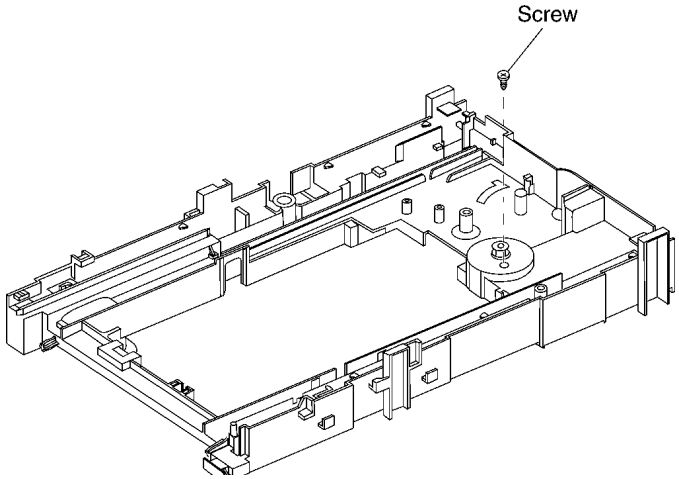

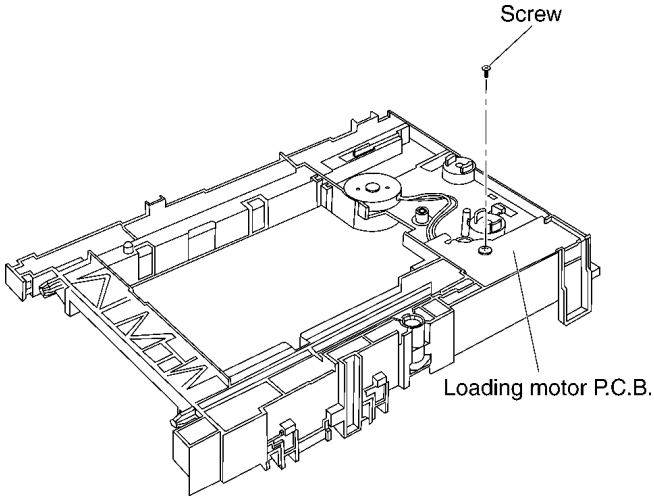

8.6. TRV Unit

8.6.1. Cautions to Be Taken in Handling the TRV Unit

The laser diode in the TRV unit may be damaged due to electrostatic discharge generating from clothes or human body. Use due caution to electrostatic discharge damage when servicing the laser diode.

1. Do not give a considerable shock to the TRV unit as it has an extremely high-precise structure.
2. To prevent the laser diode from the electrostatic discharge damage, the Intermediate FFC of the TRV unit removed from the PCB should be short-circuited with a short pin or a clip.
3. The Intermediate FFC may be cut off if an excessive force is applied to it. Use caution when handling the Intermediate FFC.

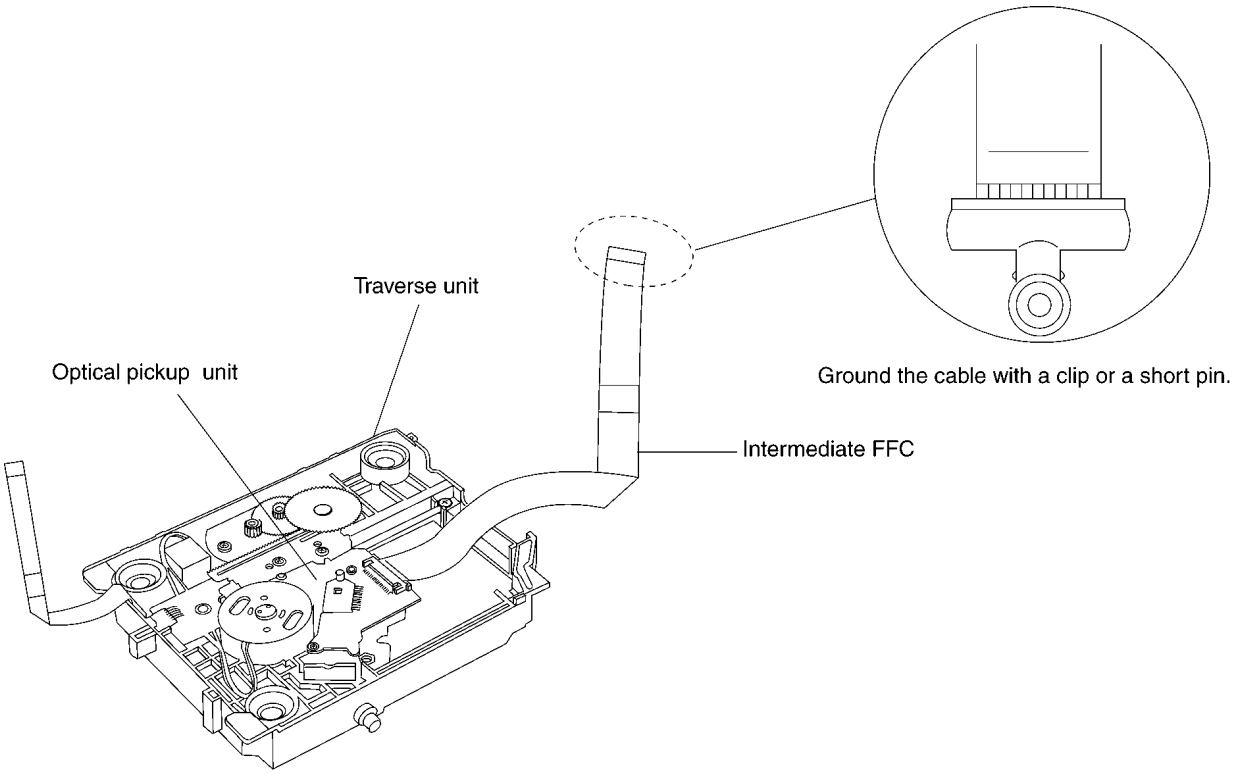

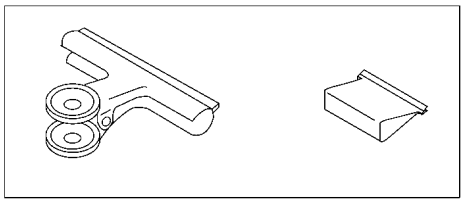

Clip or Short pin

8.6.2. Procedure for Disassembling the TRV Unit

Notice

1. This section aims to focus on the disassembling methods of some parts in the case that no damage is occurred to optical pickup units.
2. When the optical pickup unit is defective, the overall traverse unit needs replacement.
3. Please note that appropriate actions needs to be taken to prevent static damage.

Caution

Insert the short pin into the FFC of the optical pickup unit. (See “Caution to be taken in handling the TRV Unit”)

1. Before changing 22P FFC, please weld the short-circuit solder. (refer to Fig. A)

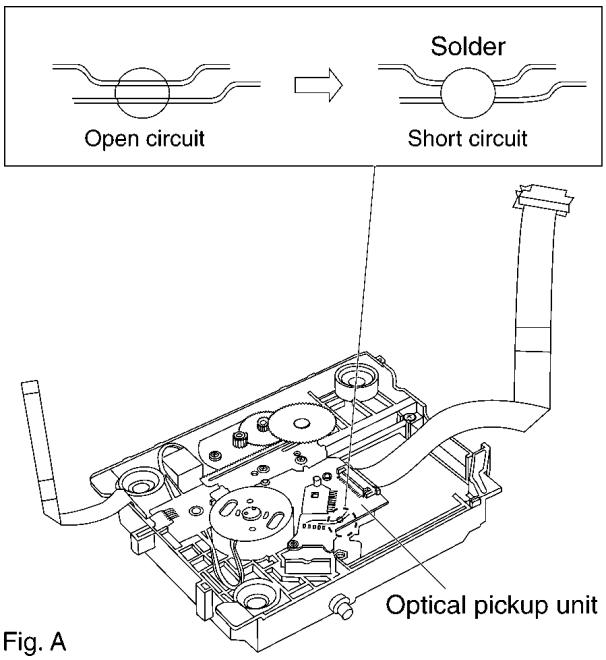

Fig. A

2. Remove the connecter, take out the 22P FFC.

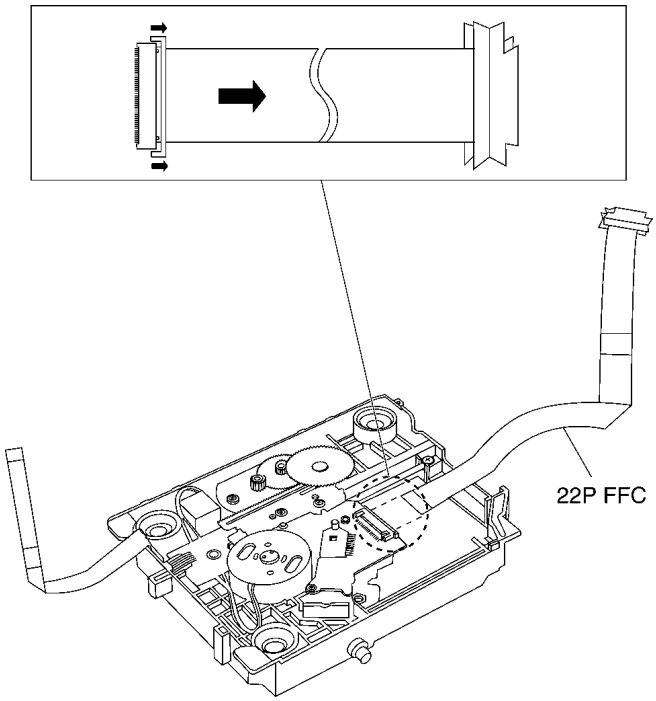

After changing the 22P FFC, please remove the solder. (refer to Fig. B)

3. Push the tabs on the back and remove the TRV Gear B and A.

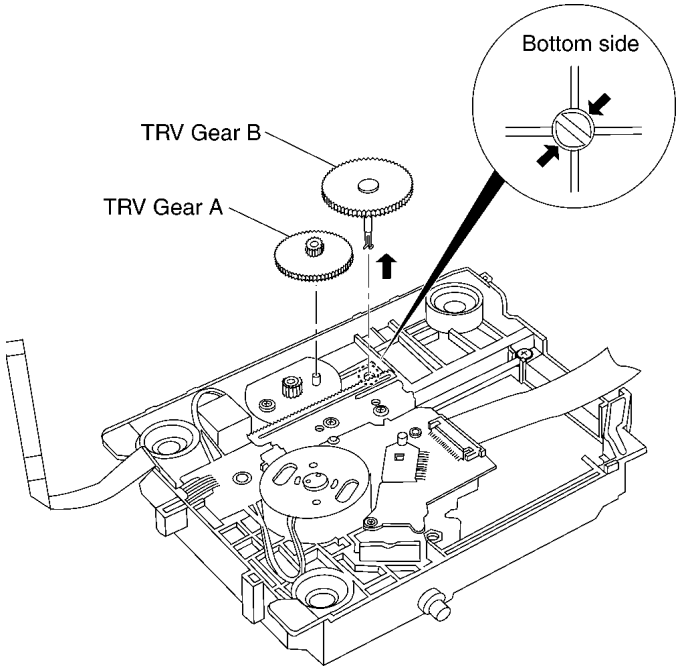

4. Unscrew the screws.
5. Remove the drive rack.

Caution

Do not dissemble drive rack fixing screws repeatly, otherwise the screws may hard to tighten and affect the accuracy of optical pickups consequently.

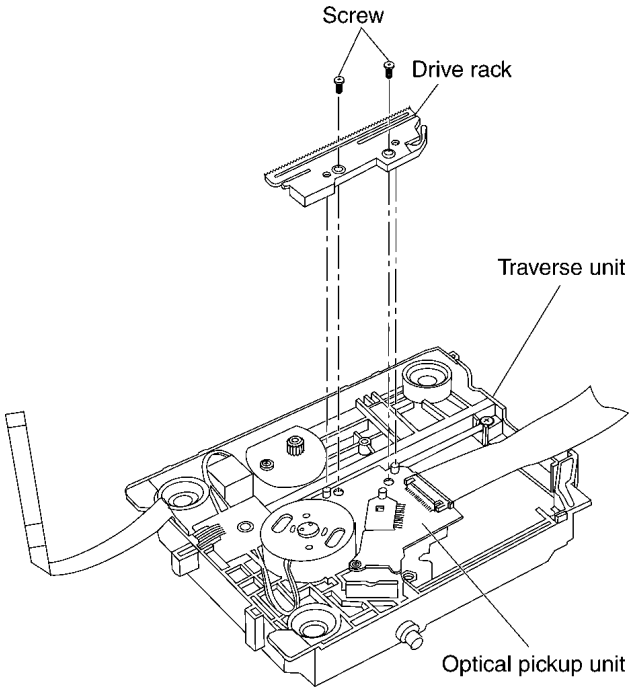

6. Remove the solders of the SP motor and the TRV motor.

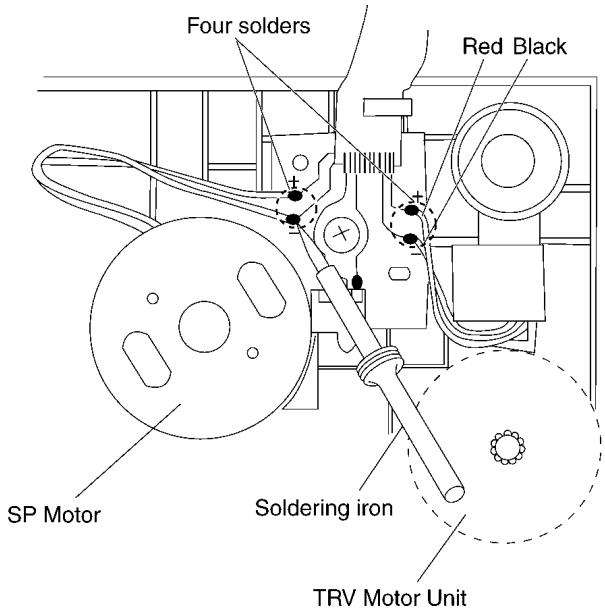

7. Unscrew the screws, then remove the TRV Motor and TRV SW P.C.B. Unit.

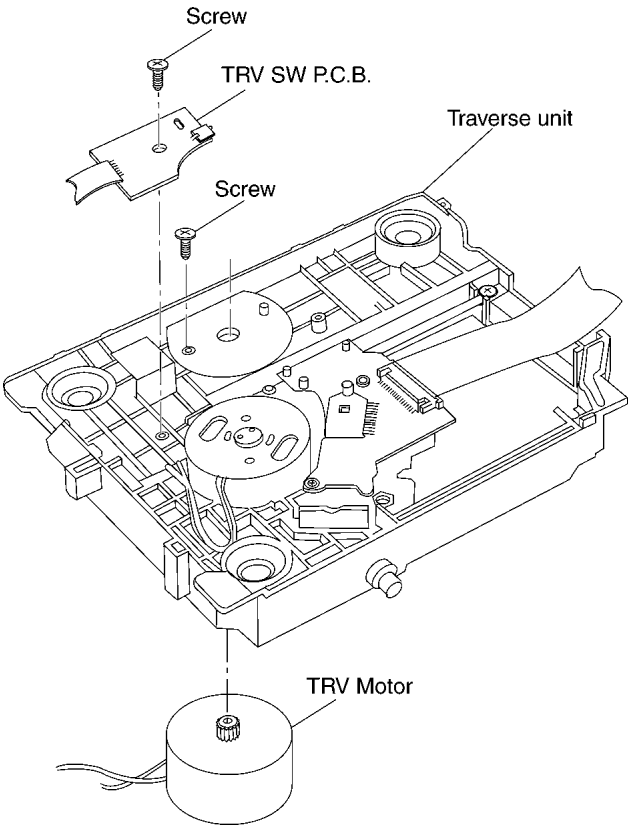

<Assembling the TRV unit>

1. After replacing the TRV Unit and connecting the 22P FFC, remove the solder on the optical pickup unit.

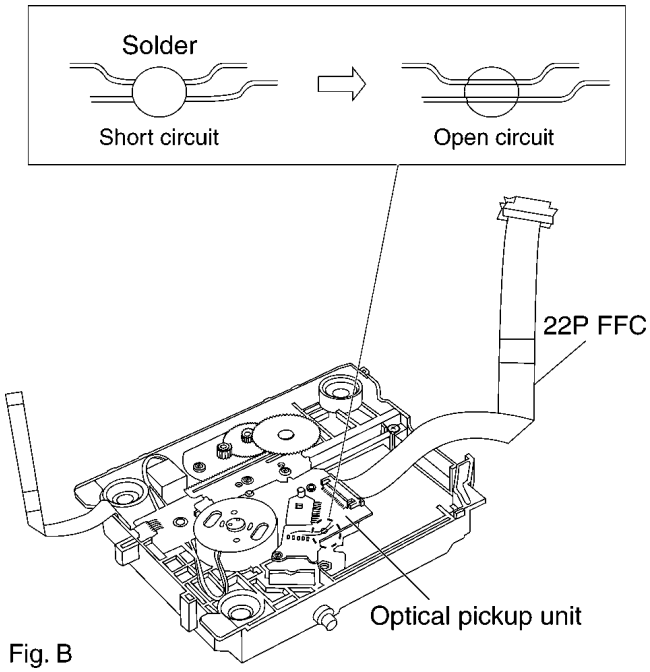

Fig. B

Caution

a. Do not give a considerable shock to the optical pickup unit as it has an extremely high-precise structure.

b. Do not touch the lens in the optical pickup unit.

2. The FFC is fixed as shown below.

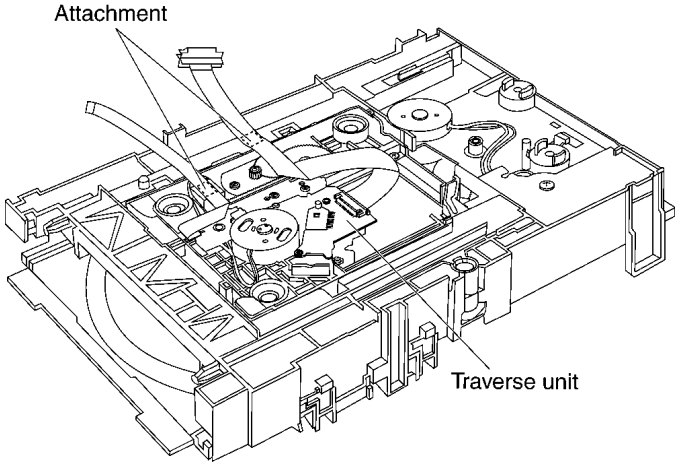

9 SELF-DIAGNOSIS FUNCTION AND SERVICE MODES

9.1. Optical Pickup Breakdown Diagnosis

The optical pickup self-diagnosis function has been included in this unit. When repairing, use the following procedure for effective Self-diagnosis. Be sure to use the self-diagnosis function before replacing the TRV Unit when "NO DISC" is displayed. As a guideline, you should replace the TRV Unit when the value of the laser drive current is more than 55.

Note:

Press the power button to turn on the power, and check the value within three minutes before the unit warms up. (Otherwise, the result will be incorrect.)

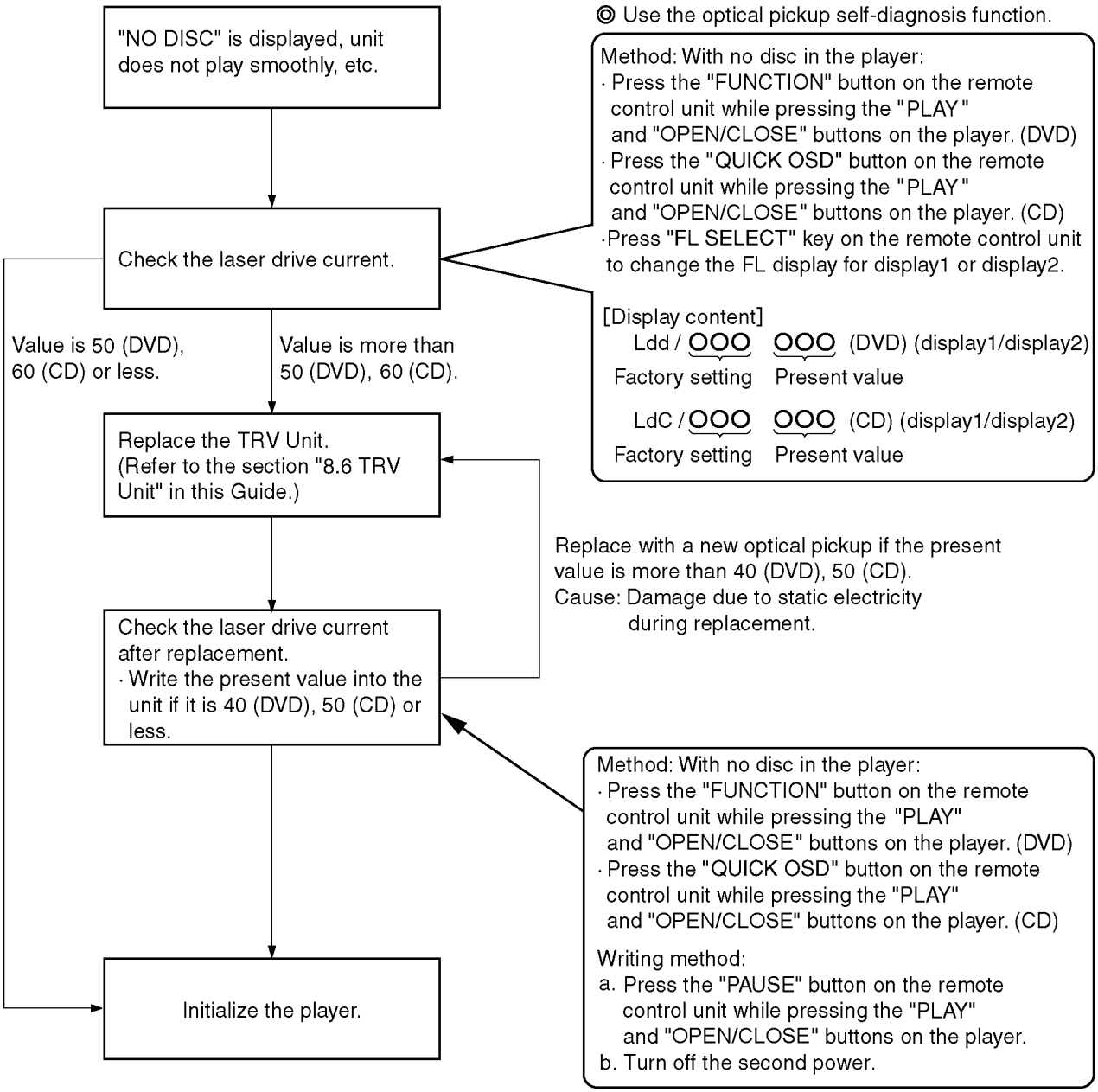

9.2. Service Mode Table 1

The service modes can be activated by pressing various button combination on the player and remote control unit. please carry out your operation based on the remote control supplied with Panasonic DVD player of previous models.

Player buttons	Remote control unit buttons	Application	Note
PLAY + OPEN/CLOSE	0	Displaying the UHF display F_ _ _	Refer to section 9.3. Self-Diagnosis Function (UHF Display).
	5	Jitter check, tilt adjustment *Display shows J_xxx/yyy_zz "yyy" and "zz" shown to the right have nothing to do with the jitter value. "yyy" is the error counter, while "zz" isthe focus drive value.	
	6	Checking the region numbers and broadcast system	
	7	Checking the program version	Check the IC8651 FLASH ROM program.
	9	Lighting Confirmation Function of Display Tube	
	FUNCTION	Checking the laser drive current	Refer to section 9.1. Optical Pickup Replacement Procedure.
	PAUSE	Writing the laser drive current value after replacing the optical pickup (do not use for anything other than optical pickup replacement)	
	POWER	Initializing the DVD player (restoring factory preset settings)	Refer to section 9.5. Initializing the DVD player.

9.3. DVD Self Diagnostic Function-Error Code

Error Code	Error Content	Additional error explanation	Defect 1	Defect 2	Defect 3	Defect 4
U11	Focus error	Focus coil, FE singal error	TRV Unit	DV5.0 (IC8001)		
H01	Tray loading error	LD motor error, DV5.0 (IC8001) error	LD Motor	IC8251		
H02	Spindle servo error	(Spindle servo, DV5.0 (IC8001) SP motor, CLV servo error)	LD Motor	DV5.0 (IC8001)		
H03	Traverse servo error	Traverse servo, DV5.0 (IC8001) , TRV motor error	TRV Motor	DV5.0 (IC8001)		
H04	Tracking servo error	Tracking coil, DV5.0 (IC8001) error	TRV Unit	DV5.0 (IC8001)		
H05	Seek error	TRV Motor, IC8251 error	TRV Motor	IC8251		
H07	Spindle motor drive error	SP motor current error, IC8251 error	TRV Unit	IC8251		
F893	FROM falsification	Firmware soft error, DV5.0 (IC8001) error	FROM (IC8651) (*1)	DV5.0 (IC8001)		
F895	Language area abnormality	Firm version agreement check for factory preset setting failure prevention	FROM (IC8651) (*1)			
F897	initialize is not completed	Initialize completion check for factory preset setting failure prevention				

Note:

An error code will be canceled if a power supply is turned OFF.

*1: When FROM or Module P.C.B. is replaced, be sure to write the present value into the player as the initial setting of laser drive current. (Refer to section 9.5 initial setting of laser drive current.)

Writing method :

a. Press the "PAUSE" button on the remote control unit while pressing the "PLAY" and "OPEN/CLOSE" buttons on the player.

b. Turn off the second power.

9.4. Last Error Code saved during NO PLAY

Error code	Error Content	Condition	Available buttons
F0C0	DVD : Cannot playback because it is not DVD Video	The DVD-ROM/-R/-RW/+R/+RW is not MP3/JPEG/DVD-Video format	POWER, OPEN/CLOSE
F0C1	DVD : Prohibited by the restricted region code	The region code of DVD is not right.	POWER, OPEN/CLOSE
F0C2	DVD : PAL restricted playback	When put the DVD-PAL disc into the NTSC only player	POWER, OPEN/CLOSE
F0C3	DVD : Parental lock setting prohibits the playback of the entire title	“LOCK ALL” of the DISC-RATINGS has been chose.	POWER, OPEN/CLOSE

9.5. Service mode table 2

Pressing various button combinations on the player and remote control unit can activate the service modes.

Please carry out your operation based on the remote control supplied with Panasonic DVD player of previous models.

Item	Player mode and button combination	Function	Display	Cancellation method
Jitter check	In PLAY mode, press PLAY and OPEN/CLOSE buttons on the player,and "5" button on the remote control unit. (Press "FL SELECT" key on the remote control unit to change the FL display for Display1 or Display2.)	Jitter check Jitter rate is measured and displayed. Measurement is repeatedly done in the cycle of one second. Read error counter starts from zero upon mode setting. When target block data failed to be read out, the counter advances by one increment. When the failure is caused by minor error, it may be corrected when retried to enable successful reading. In this case, the counter advances by one. When the error persists even after retry, the counter may jump by two or more.	J _xxx/yyy_zz(display1/display2) Focus drive value Read error counter Jitter rate Jitter check mode Jitter rate is shown in decimal notation to one place of decimal. Focus drive value is shown in hexadecimal notation.	Press STOP or OPEN/CLOSE button.
Error code check	In STOP (no disc) or PLAY mode, press PLAY and OPEN/CLOSE buttons on the player, and "0" button on the remote control unit. * With pointing of cursor up and down on display, the panel controller switches serial number of history and sends out the command accordingly.	Error code check The latest error code stored in FLASH ROM is displayed.	Error code (play_err) is expressed in the following convention. Error code = 0 x DAXX is expressed: → nn UXX Error code = 0 x DBXX is expressed: → nn HXX Error code = 0 x DXXX is expressed: → nn FXXX * "nn" denotes the serial number of history.(01～20) * "xx" denotes the error code.	Cancelled automatically 5 seconds later.
Initial setting of laser drive current	In STOP (no disc) mode, press PLAY and OPEN/CLOSE buttons on the player, and PAUSE button on the remote control unit. (Press "FL SELECT" key on the remote control unit to change the FL display for Display1or Display2.)	Initial setting of laser drive currentInitial current value for each of DVD laser and CD laser is separately saved in FLASH ROM.	LdO/034_032(display1/display2) DVD laser current measurement CD laser current measurement Laser current measurement mode The value denotes the current in decimal notation. The above example shows the initial current is 34mA and 28mA for DVD laser and CD laser respectively when the laser is witched on.	Cancelled automatically 5 seconds later.
DVD laser drive current measurement	In STOP (no disc) mode, press PLAY and OPEN/CLOSE buttons on the player, and FUNCTION button on the remote control unit. (Press "FL SELECT" key on the remote control unit to change the FL display for Display1 or Display2.)	DVD laser drive current measurement ·DVD laser drive current is measured and the result is displayed together with the initial value stored in FLASH ROM. After the measurement, DVD laser emission is kept on. It is turned off when POWER key is switched off. (It is also turned off when POWER button on the player is switched off.)	Ldd/034_032(display1/display2) Measured current Initial current stored in EEPROM DVD laser current measurement mode The value denotes the current in decimal notation. The above example shows the initial current is 34mA and the measured value is 32mA.	Cancelled automatically 5 seconds later.
CD laser drive current measurement	In STOP (no disc) mode, press PLAY and OPEN/CLOSE buttons on the player, and QUICK OSD button on the remote control unit. (Press "FL SELECT" key on the remote control unit to change the FL display for Display1 or Display2.)	CD laser drive current measurement CD laser drive current is measured and the result is displayed together with the initial value stored in FLASH ROM. After the measurement, CD laser emission is kept on. It is turned off when POWER key is switched off. (It is also turned off when POWER button on the player is switched off.)	LdC/028_026(display1/display2) Measured current Initial current stored in EEPROM CD laser current measurement mode The value denotes the current in decimal notation. The above example shows the initial current is 28mA and the measured value is 26mA.	Cancelled automatically 5 seconds later.

Item	Player mode and button combination	Function	Display	Cancellation method
Version display	In STOP (no disc) or PLAY mode, press PLAY and OPEN/CLOSE buttons on the player, and "7" button on the remote control unit. (Press "FL SELECT" key on the remote control unit to change the FL display for Display1 or Display2.)	Version display	xxx/y zzz(display1/display2) System controller release number System controller model number System controller generation ※ When check this item, connect this player to monitor TV and check with watching the display shown on the monitor.	Cancelled automatically 5 seconds later.
Lighting of display tube	In any mode, press PLAY and OPEN/CLOSE buttons on the player, and "9" button on the remote control unit.	Lighitng of display tube	———————	Repeat the same operation.
Dealer's lock	In PLAY mode, press PLAY and OPEN/CLOSE buttons on the player, and QUICK REPLAY button on the remote control unit.	Dealer's lock The lock is switched ON or OFF. When dealer's lock is ON, it prohibits switching off of the secondary power and tray opening. When the lock is switched, its ON/OFF status is stored in FLASH ROM.	· "LOC" sign appears when dealer's lock is switched on, or when secondary power key or tray opening key is pressed while the lock is on. ·"UNLOC" sign appears when dealer's lock is switched off.	Repeat the same operation.
Initialization	In STOP (no disc) mode, press PLAY, POWER and OPEN/CLOSE buttons on the player for 3 seconds or longer.	Initialization User settings are cancelled and player is initialized to factory setting.	"Ini"	
All reset	When initialization by the user is being performed, and "INI" is displayed on the FL, press PLAY and OPEN/CLOSE buttons on the player.	Initialization User settings are cancelled and player is initialized to factory setting. All of the error codes saved in the FROM are cancelled.	RESET	
Region display	In STOP (no disc) or PLAY mode, press PLAY and OPEN/CLOSE buttons on the player, and "6" button on the remote control unit.	Region display	x_yy_zz Panel controller jumper information N: NTSC / 6: PAL60 N: noPAL / P: PAL Region No.	Cancelled automatically 5 seconds later.

Item	Player mode and button combination	Function	Display	Cancellation method
Timer 1 check	In STOP (no disc) mode, press PLAY and OPEN/CLOSE buttons on the player, and "1" button on the remote control unit. (Press "FL SELECT" key on the remote control unit to change the FL display for Display1 or Display2.	Timer 1 check Laser operation timer Operation time is measured separately for DVD laser and CD laser.	t11234/5678(display1/display2) Shown to the display1 is DVD laser time, and to the display2 CD laser time. Time is shown in 4 digits of decimal notation in a unit of 10 hours. "0000" will follow "9999".	Cancelled automatically 5 seconds later.
Timer 1 reset	While displaying Timer 1 data, press PLAY and OPEN/CLOSE buttons on the player, and "2" button on the remote control unit. (Press "FL SELECT" key on the remote control unit to change the FL display for Display1 or Display2.	Timer 1 reset Laser operation timer Operation time of both DVD laser and CD laser is reset all at once.	t10000/0000(display1/display2)	Cancelled automatically 5 seconds later.
Timer 2 check	In STOP (no disc) mode, press PLAY and OPEN/CLOSE buttons on the player, and "3" button on the remote control unit. (Press "FL SELECT" key on the remote control unit to change the FL display for Display1 or Display2.	Timer 2 check Spindle motor operation timer	t21234/5(display1/display2) Time is shown in 5 digits of decimal notation in a unit of 1 hours. "00000" will follow "99999".	Cancelled automatically 5 seconds later.
Timer 2 reset	While displaying Timer 2 data, press PLAY and OPEN/CLOSE buttons on the player and "8"button on the remote control unit. (Press "FL SELECT" key on the remote control unit to change the FL display for Display1 or Display2.	Timer 2 reset Spindle motor operation timer	t20000/0(display1/display2)	Cancelled automatically 5 seconds later.

9.6. Sales demonstration lock function

This function prevents discs from being lost when the unit is used for sales demonstrations by disabling the disc eject function. "LOC" is displayed on the unit, and ordinary operation is disabled.

9.6.1. Setting

The sales demonstration lock is set by simultaneously pressing PLAY and OPEN/CLOSE buttons on the player and QUICK REPLAY button on the remote control unit for 1 second or longer.

9.6.2. Cancellation

The lock can be cancelled by the same procedure as used in setting. ("UNLOC" is displayed on cancellation. Disconnecting the power cable from power outlet does not cancel the lock.)

9.7. Handling After Completing Repairs

Use the following procedure after completing repairs.

9.7.1. Method

Confirm that the power is turned on:

1. Press the "OPEN/CLOSE" button to close the tray.

2. Press the "POWER" button to turn off the power.

3. Disconnect the power plug from the outlet.

9.7.2. Precautions

Do not disconnect the power plug from the outlet with the tray still open, then close the tray manually.

10 SERVICE PRECAUTIONS

10.1. Recovery after the DVD player is repaired.

- The DVD player requires no recovery process after it is repaired; therefore, there is no necessity of using recovery disc.
- Models that require no recovery process are listed as below(As of Feb.2006):

*DVD-K32
*DVD-S32
*DVD-K325
*DVD-S325
*DVD-S1

10.2. Firmware version-up of the DVD player

- The firmware of the DVD player may be renewed to improve the quality including operationability and playability to the substandard discs.

  Make sure to observe the following rules when performing version-up.

  Note:

  When FROM or module P.C.B. is replaced, carry out the process of firmware version-up.
- The latest firmware required for version-up can be downloaded from TSN-WEB [Support Information from NWBG-PAVC].

  When it is finished, use burning software to make up a version-up disc in the form of CD-R.

  Note:

  Do not modify the file name of downloaded data at random; keep the original file names for disc burning.

  Make sure to select normal format instead of image format.

  If you may not be able to complete a downloding from the TSN-WEB page, please obtain the file through your local Panasonic Service Organization.
- Updating firmware

1. Load the version-up disc that is supplied to the player and run it.
2. Firmware version of the player is automatically checked. Appropriate message appears whenever necessary.
3. Using remote controller's "ENTER" button or player´s "OPEN/CLOSE" button, select whether version updating is to be done or not according to the message appearing on the screen.
4. a. If "ENTER" is pushed, version updating is performed.

   b. If "OPEN/CLOSE" is pushed, version updating is cancelled.
5. a. When updating is finished, the player will restart. Remove the disc after the tray has opened automatically.

   b. Remove the disc.
6. a. Write the present value into the player as the initial setting of laser drive current. (Refer to section 9.5 initial setting of laser drive current .)
7. Turn off the power.

Note:

If the AC power supply is shut out during version-up due to a power failure, the version-up is improperly carried out.

In such a case, replace the FROM and carry out the version-up again.

11 ADJUSTMENT PROCEDURES

11.1. Service Tools and Equipment

Application	Name	Number
Inspection	Extension cable (module P.C.B. to mother P.C.B.)	VUC8026
	Extension cable (module P.C.B. to mother P.C.B.)	RFKZ0106
Others	Hanarl	VFK1784
	Grease	RFKXPG641
	Drysurf	RFKXGUD24
Confirmation	CD test disc	PVCD-K06 or any other commercially available disc
	VCD test disc	PVCD-K06 or any other commercially available disc
	DVD test disc	DVDT-S15 or DVDT-S01

11.2. Important points in electrical adjustment

・Follow the adjustment procedures described in this Manual.

11.3. Storing and Handling Test Discs

・Surface precision is vital for DVD test discs. Be sure to store and handle them carefully.

1. Do not place discs directly onto the workbench, etc., after use.
2. Handle discs carefully in order to maintain their flatness. Place them into their case after use and store them vertically. Store discs in a cool place where they are not exposed to direct sunlight or air from air conditioners.
3. Accurate adjustment will not be possible if the disc is warped when placed on a surface made of glass, etc. If this happens, use a new test disc to make optical adjustments.
4. If adjustment is done using a warped disc, the adjustment will be incorrect and some discs will not be playable.

12 ABBREVIATIONS

INITIAL/LOGO		ABBREVIATIONS
A	A0~UP	ADDRESS
	ACLK	AUDIO CLOCK
	AD0~UP	ADDRESS BUS
	ADATA	AUDIO PES PACKET DATA
	ALE	ADDRESS LATCH ENABLE
	AMUTE	AUDIO MUTE
	AREQ	AUDIO PES PACKET REQUEST
	ARF	AUDIO RF
	ASI	SERVO AMP INVERTED INPUT
	ASO	SERVO AMPOUTPUT
	ASYNC	AUDIO WORD DISTINCTION SYNC
B	BCK	BIT CLOCK (PCM)
	BCKIN	BIT CLOCK INPUT
	BDO	BLACK DROP OUT
	BLKCK	SUB CODE BLOCK CLOCK
	BOTTOM	CAP. FOR BOTTOM HOLD
	BYP	BYPATH
	BYTCK	BYTE CLOCK
C	CAV	CONSTANT ANGULAR VELOCITY
	CBDO	CAP. BLACK DROP OUT
	CD	COMPACT DISC
	CDSCK	CD SERIAL DATA CLOCK
	CDSRDATA	CD SERIAL DATA
	CDRF	CD RF (EFM) SIGNAL
	CDV	COMPACT DISC-VIDEO
	CHNDATA	CHANNEL DATA
	CKSL	SYSTEM CLOCKSELECT
	CLV	CONSTANT LINEAR VELOCITY
	COFTR	CAP. OFF TRACK
	CPA	CPU ADDRESS
	CPCS	CPU CHIP SELECT
	CPDT	CPU DATA
	CPUADR	CPU ADDRESS LATCH
	CPUADT	CPU ADDRESS DATA BUS
	CPUIRQ	CPU INTERRUPT REQUEST
	CPRD	CPU READ ENABLE
	CPWR	CPU WRITE ENABLE
	CS	CHIPSELECT
	CSYNCIN	COMPOSITE SYNC IN
	CSYNCOUT	COMPOSITE SYNC OUT
D	DACCK	D/A CONVERTER CLOCK
	DEEMP	DEEMPHASIS BIT ON/OFF
	DEMPH	DEEMPHASIS SWITCHING
	DIG0~UP	FL DIGIT OUTPUT
	DIN	DATA INPUT
	DMSRCK	DM SERIAL DATA READ CLOCK
	DMUTE	DIGITAL MUTE CONTROL
	DO	DROP OUT
	DOUT0~UP	DATAOUTPUT
	DRF	DATA SLICE RF (BIAS)
	DRPOUT	DROP OUT SIGNAL
	DREQ	DATA REQUEST
	DRESP	DATA RESPONSE
	DSC	DIGITAL SERVO CONTROLLER
	DSLF	DATA SLICE LOOP FILTER
	DVD	DIGITAL VIDEO DISC

INITIAL/LOGO		ABBREVIATIONS
E	EC	ERROR TORQUE CONTROL
	ECR	ERROR TORQUE CONTROL REFERENCE
	ENCSEL	ENCODER SELECT
	ETMCLK	EXTERNAL M CLOCK (81MHz/40.5MHz)
	ETSCLK	EXTERNAL S CLOCK (54MHz)
F	FBAL	FOCUS BALANCE
	FCLK	FRAME CLOCK
	FE	FOCUS ERROR
	FFI	FOCUS ERROR AMP INVERTED INPUT
	FEO	FOCUS ERROR AMP OUTPUT
	FG	FREQUENCY GENERATOR
	FSC	FREQUENCY SUB CARRIER
	FSCK	FS (384 OVER SAMPLING) CLOCK
G	GND	COMMON GROUNDING (EARTH)
H	HA0~UP	HOST ADDRESS
	HD0~UP	HOST DATA
	HINT	HOST INTERRUPT
	HRXW	HOST READ/WRITE
I	IECOUT	IEC958 FORMAT DATA OUTPUT
	IPFRAG	INTERPOLATION FLAG
	IREF	I (CURRENT) REFERENCE
	ISEL	INTERFACE MODE SELECT
L	LDON	LASER DIODE CONTROL
	LPC	LASER POWER CONTROL
	LRCK	L CH/R CH DISTINCTION CLOCK
M	MA0~UP	MEMORY ADDRESS
	MCK	MEMORY CLOCK
	MCKI	MEMORY CLOCK INPUT
	MCLK	MEMORY SERIAL COMMAND CLOCK
	MDATA	MEMORY SERIAL COMMAND DATA
	MDQ0~UP	MEMORY DATA INPUT/OUTPUT
	MDQM	MEMORY DATA I/O MASK
	MLD	MEMORYSERIAL COMMAND LOAD
	MPEG	MOVING PICTURE EXPERTS GROUP
O	ODC	OPTICAL DISC CONTROLLER
	OFTR	OFF TRACKING
	OSCI	OSCILLATOR INPUT
	OSCO	OSCILLATOR OUTPUT
	OSD	ON SCREEN DISPLAY
P	P1~UP	PORT
	PCD	CD TRACKING PHASE DIFFERENCE
	PCK	PLL CLOCK
	PDVD	DVD TRACKING PHASE DIFFERENCE
	PEAK	CAP. FOR PEAK HOLD
	PLLCLK	CHANNEL PLL CLOCK
	PLLOK	PLL LOCK
	PWMCTL	PWM OUTPUT CONTROL
	PWMDA	PULSE WAVE MOTOR DRIVEA
	PWMOA, B	PULSE WAVE MOTOR OUT A, B

INITIAL/LOGO		ABBREVIATIONS
R	RE	READ ENABLE
	RFENV	RF ENVELOPE
	RFO	RF PHASE DIFFERENCE OUTPUT
	RS	(CD-ROM) REGISTER SELECT
	RSEL	RF POLARITY SELECT
	RST	RESET
	RSV	RESERVE
S	SBI0, 1	SERIAL DATA INPUT
	SBO0	SERIAL DATA OUTPUT
	SBT0, 1	SERIAL CLOCK
	SCK	SERIAL DATA CLOCK
	SCKR	AUDIO SERIAL CLOCK RECEIVER
	SCL	SERIAL CLOCK
	SCLK	SERIAL CLOCK
	SDA	SERIAL DATA
	SEG0~UP	FL SEGMENT OUTPUT
	SELCLK	SELECTCLOCK
	SEN	SERIAL PORT ENABLE
	SIN1, 2	SERIAL DATA IN
	SOUT1, 2	SERIAL DATA OUT
	SPDI	SERIAL PORT DATA INPUT
	SPDO	SERIAL PORT DATA OUTPUT
	SPEN	SERIAL PORT R/W ENABLE
	SPRCLK	SERIAL PORT READ CLOCK
	SPWCLK	SERIAL PORT WRITE CLOCK
	SQCK	SUB CODE Q CLOCK
	SQCX	SUBCODE Q DATA READ CLOCK
	SRDATA	SERIAL DATA
	SRMADR	SRAM ADDRESS BUS
	SRMDT0~7	SRAM DATA BUS 0~7
	SS	START/STOP
	STAT	STATUS
	STCLK	STREAM DATA CLOCK
	STD0~UP	STREAM DATA
	STENABLE	STREAM DATA INPUT ENABLE
	STSEL	STREAM DATA POLARITY SELECT
	STVALID	STREAM DATAVALIDITY
	SUBC	SUB CODE SERIAL
	SBCK	SUB CODE CLOCK
	SUBQ	SUB CODE Q DATA
	SYSCLK	SYSTEM CLOCK
T	TE	TRACKING ERROR
	TIBAL	BALANCE CONTROL
	TID	BALANCE OUTPUT 1
	TIN	BALANCE INPUT
	TIP	BALANCE INPUT
	TIS	BALANCE OUTPUT 2
	TPSN	OP AMP INPUT
	TPSO	OP AMP OUTPUT
	TPSP	OP AMP INVERTED INPUT
	TRCRS	TRACK CROSSSIGNAL
	TRON	TRACKING ON
	TRSON	TRAVERSE SERVO ON

INITIAL/LOGO		ABBREVIATIONS
V	VBLANK	V BLANKING
	VCC	COLLECTOR POWER SUPPLY VOLTAGE
	VCDCONT	VIDEO CD CONTROL (TRACKING BALANCE)
	VDD	DRAIN POWER SUPPLY VOLTAGE
	VFB	VIDEO FEED BACK
	VREF	VOLTAGE REFERENCE
	VSS	SOURCE POWER SUPPLYVOLTAGE
W	WAIT	BUS CYCLE WAIT
	WDCK	WORD CLOCK
	WEH	WRITE ENABLE HIGH
	WSR	WORD SELECT RECEIVER
X	X	X´ TAL
	XALE	X ADDRESS LATCH ENABLE
	XAREQ	X AUDIO DATA REQUEST
	XCDROM	X CD ROM CHIP SELECT
	XCS	X CHIP SELECT
	XCSYNC	X COMPOSITE SYNC
	XDS	X DATA STROBE
	XHSYNCO	X HORIZONTAL SYNC OUTPUT
	XHINT	XH INTERRUPTREQUEST
	XI	X´ TAL OSCILLATOR INPUT
	XINT	X INTERRUPT
	XMW	X MEMORY WRITE ENABLE
	XO	X´ TAL OSCILLATOR OUTPUT
	XRE	X READ ENABLE
	XSRMCE	X SRAM CHIP ENABLE
	XSRMOE	X SRAM OUTPUT ENABLE
	XSRMWE	X SRAM WRITE ENABLE
	XVCS	X V-DEC CHIPSELECT
	XVDS	X V-DEC CONTROL BUS STROBE
	XVSYNCO	X VERTICAL SYNC OUTPUT

13 VOLTAGE CHART

Note:

- Circuit voltage and waveform described herein shall be regarded as reference information when probing defect point, because it may differ from an actual measuring value due to difference of measuring instrument and its measuring condition and product itself.

13.1. MOTHER P.C.B.

Ref No.	IC1021									IC1101				IC1151						
MODE	1	2	3	4	5	6	7	9		1	2	3		1	2	3	4	5		
PLAY	-0.5	-0.1	-0.5	-0.2	-0.6	-0.1	-0.1	-4		3.4	0	2.5		11	3.2	9	0	0		
STOP	-0.3	-0.1	-0.3	-0.2	0	-0.2	-0.2	-4		3.4	0	2.5		11.5	3.2	9	0	0		
Ref No.	IC1195				IC3501															
MODE	1	2	3		1	2	3	4	5	6	7	8	9	10	11	12	13	14	15	16
PLAY	5.1	0	3.3		4.9	2.3	2.4	1.7	2.6	1.7	0	2.3	2.3	0	0	2.3	1.6	1.6	1.6	2.3
STOP	5.1	0	3.3		4.9	2.3	2.5	1.7	2.6	1.7	0	2.3	2.3	0	2.3	2.3	1.6	1.6	1.5	2.3
Ref No.	IC3502(EE)							IC3802(EE)												
MODE	1	2	3	4	5	6		1	2	3	4	5	6							
PLAY	0	1.9	4.9	2.2	0	1.8		0	2.5	4.9	2.5	0	2.5							
STOP	0	0	4.9	1.8	0	1.8		0	2.5	5	2.5	0	2.5							
Ref No.	IC3811(EE)																			
MODE	1	2	3	4	5	6	7	8	9	10	11	12	13	14	15	16	17	18	19	20
PLAY	4.9	0	0	2.2	4.9	0.5	0	1.5	2.2	4.9	0.2	0	0.5	0	0.2	4.9	2.8	2.8	0	3.8
STOP	5	0	0	2.2	5	0	0	1.5	2.2	5	0.3	0	0.5	0	0.5	5	2.9	0	0	3.6
Ref No.	IC3811(EE)																			
MODE	21	22	23	24	25	26	27	28	29	30	31	32								
PLAY	3.7	0	3.8	3.7	0	1.3	1.5	0	1.4	1.4	0	2.3								
STOP	3.7	0	0	1.2	0	1.3	0	0	1.4	1.4	0	2.3								
Ref No.	IC4301																			
MODE	1	2	3	4	5	6	7	8												
PLAY	1.9	1.6	0	-9.4	1.6	1.6	1.9	11.7												
STOP	1.8	1.7	0	-9.4	1.6	1.6	1.9	12.2												
Ref No.	IC6001																			
MODE	1	2	3	4	5	6	7	8	9	10	11	12	13	14	15	16	17	18	19	20
PLAY	0	0	0	0	1.9	3.1	3.3	3.3	1.4	0	0	0	3.3	-9.1	-9.1	0	-6.9	-7	-6.9	-9
STOP	0	0	0	0	1.9	3.1	3.3	3.3	1.3	0	0	0	3.3	-4.5	-4.5	-4.5	-6.6	-6.7	-6.6	0
Ref No.	IC6001																			
MODE	21	22	23	24	25	26	27	28	29	30	31	32	33	34	35	36	37	38	39	40
PLAY	-4.3	-4.7	-9.1	0	-6.9	-9.1	0	0	-9.2	-9.2	-9.4	-9.4	-9.4	-9.4	-9.4	-9.3	-9.4	-9.4	-7.2	-7.1
STOP	-8.9	-8.9	-6.4	0	0	-2.3	-2.3	-4.5	-4.4	-9.1	-9.1	-8.9	-9	-9.1	-9.1	-9.1	-9.1	-9.1	-6.9	-6.9
Ref No.	IC6001					Q1051					Q1115							Q3801(EE)		
MODE	41	42	43	44		1	2	3	4		1	2	3	4	5	6		B	C	E
PLAY	-7.2	-7.1	3.3	0		5.1	4.1	-0.5	-0.5		5.1	5.1	0.1	5.1	5.1	5.1		5.9	11.9	6.5
STOP	-6.9	-6.9	3.3	0		5.1	4.1	-0.6	-0.6		5.1	5.1	0.1	5.1	5.1	5.1		6.2	12.2	6.8
Ref No.	Q3821(EE)							Q3851(EE)				Q3852(EE)				Q4422				
MODE	1	2	3	4	5	6		B	C	E		B	C	E		B	C	E		
PLAY	4.9	4.9	4.9	0	0	0		0	0	-5.9		0	0	-5.9		0	0	-5.9		
STOP	0	0	5	0	0	0		0	0	0.7		0	0	0.7		0	0	0.7		
Ref No.	Q4423				Q4751				Q6085				QR1115				QR3501(EE)			
MODE	B	C	E		B	C	E		B	C	E		B	C	E		B	C	E	
PLAY	0	0	-5.9		1.8	5.1	2.5		-6	-5.9	-5.3		0	0	3.2		0	2.8	0	
STOP	0	0	0.7		1.9	5.1	2.5		-5.8	-5.7	-5.1		0	0	3.2		0	2.8	0	
Ref No.	QR3502(EE)				QR3821(EE)				QR3822(EE)				QR3823(EE)				QR4302			
MODE	B	C	E		B	C	E		B	C	E		B	C	E		B	C	E	
PLAY	0	2.6	0		0	0	2.8		0	0	4.9		5.9	5.9	0		0	-5.9	0	
STOP	0	2.5	0		0	0	2.8		0	0	5		6.2	6.2	0		3.4	3.4	0	
Ref No.	QR4306				QR6001				QR6002				QR6003				QR6004			
MODE	B	C	E		B	C	E		B	C	E		B	C	E		B	C	E	
PLAY	0	0	2.8		0	0	3.2		3.3	3.3	0		3.3	3.3	0		-9.5	-9.5	3.3	
STOP	0	3.4	0		0	0	3.2		3.3	3.3	0		3.3	3.3	0		-9	3.3	3.3	
Ref No.	QR6101																			
MODE	B	C	E																	
PLAY	0	0.1	3.2																	
STOP	0	0.1	3.2																	

13.2. MODULE P.C.B.

Ref No.	IC8001																			
MODE	1	2	3	4	5	6	7	8	9	10	11	12	13	14	15	16	17	18	19	20
PLAY	0.8	0.8	0.5	0.4	0	3.3	0.5	0.5	0.5	0.5	0.5	0.5	0.5	0.5	0	3.3	0.5	0.5	0	1.2
STOP	1.5	1.4	1.4	0	0	3.3	1.4	1.4	1.4	1.4	1.4	1.4	1.4	1.4	0	0	1.4	1.4	0	1.2
Ref No.	IC8001																			
MODE	21	22	23	24	25	26	27	28	29	30	31	32	33	34	35	36	37	38	39	40
PLAY	0	0	0	0	3.3	0	3.3	3.3	0	3.3	3.3	0	3.3	0	0	0	3.3	1.7	0	0
STOP	0	0	0	0	0	0	0	0	0	0	3.3	0	3.3	0	0	0	0	0	0	3.3
Ref No.	IC8001																			
MODE	41	42	43	44	45	46	47	48	49	50	51	52	53	54	55	56	57	58	59	60
PLAY	3.3	3.3	0	1.2	3.3	3.3	3.3	0	0	0	0	3.3	3.3	0	3.3	1.3	0	3.3	3.3	0
STOP	3.3	0	0	1.2	3.3	0	0	0	0	0	0	3.3	3	3	3.3	1.3	0	3.3	3.3	0
Ref No.	IC8001																			
MODE	61	62	63	64	65	66	67	68	69	70	71	72	73	74	75	76	77	78	79	80
PLAY	3.3	1.6	3.3	0	0	1.8	1.6	0	3.3	3.3	0	0	0	0	0	0	0	0	0	0
STOP	3.3	1.6	0	0	3.3	1.7	1.6	0	3.3	3.3	0	3.3	3.3	0	3.3	0	0	0	0	0
Ref No.	IC8001																			
MODE	81	82	83	84	85	86	87	88	89	90	91	92	93	94	95	96	97	98	99	100
PLAY	0	0	1.2	0	0.9	2.3	0	1.8	0	0.1	0	3.2	2	2	0	1.8	1.6	1.6	1.6	1.6
STOP	0	0	1.2	3.2	0.9	0	0	1.8	0	0	1.7	1.7	2.1	2	1.8	2.1	1.6	1.6	1.6	0
Ref No.	IC8001																			
MODE	101	102	103	104	105	106	107	108	109	110	111	112	113	114	115	116	117	118	119	120
PLAY	1.9	1.4	0.2	0.1	0.2	2.2	3.2	0	2.2	1.6	2.2	2.2	2.2	2.2	2.2	2.2	3.2	0	0	0
STOP	0	1.6	0	0	0	0	3.2	0	2.2	1.6	2.2	2.2	2.2	2.2	2.2	2.2	3.2	0	3.2	0
Ref No.	IC8001																			
MODE	121	122	123	124	125	126	127	128	129	130	131	132	133	134	135	136	137	138	139	140
PLAY	1.8	2.5	1.6	1.7	0	1.6	1.7	3.3	0.8	0.9	0.4	3.3	2.2	0	1.1	2.2	0	0.4	0.9	0
STOP	2	1.6	1.6	1.6	0	1.6	1.6	3.3	0.8	0.9	0.4	3.2	2.2	1	1	2.2	0	1.4	0.8	0
Ref No.	IC8001																			
MODE	141	142	143	144	145	146	147	148	149	150	151	152	153	154	155	156	157	158	159	160
PLAY	3.3	3.3	0	1.6	0	1.6	3.2	0	0	0	0	1.6	0	3.3	1.5	1.6	0	1.5	3.3	3.1
STOP	3.3	3.3	0	1.6	0	1.6	3.2	0	0	0	0	1.6	0	3.3	1.5	1.6	0	1.2	0.9	3.1
Ref No.	IC8001																			
MODE	161	162	163	164	165	166	167	168	169	170	171	172	173	174	175	176	177	178	179	180
PLAY	2.9	3.2	2.9	3	0	3.3	3.1	3	3	3.2	3	3	0	3.3	3.1	3	3.1	2.9	2.9	2.8
STOP	2.9	3.2	3	3.3	0	3.3	3.1	3.1	3	3.3	3.1	3	0	3.3	3.2	3	3.1	2.9	2.9	0
Ref No.	IC8001																			
MODE	181	182	183	184	185	186	187	188	189	190	191	192	193	194	195	196	197	198	199	200
PLAY	3.2	0	1.6	3.3	1.6	0	1.2	3.2	0	3.2	3.2	0	0	0	0	3.3	3.3	0	0	1.5
STOP	3.2	0	1.6	3.2	1.6	0	1.2	3.2	3.2	3.1	3.2	0	0	0	0	3.3	0	0	0	1.5
Ref No.	IC8001																			
MODE	201	202	203	204	205	206	207	208	209	210	211	212	213	214	215	216				
PLAY	0	1.8	0	0	3.2	0	0.2	1.4	1.5	0	1.2	1.4	2.6	2.6	1.5	1.5				
STOP	0	1.6	0	0	3.3	1.6	0	1.6	1.6	0	0	0	3.3	3.3	1.5	1.5				
Ref No.	IC8051																			
MODE	1	2	3	4	5	6	7	8	9	10	11	12	13	14	15	16	17	18	19	20
PLAY	3.3	3.1	3.3	3.1	3.1	0	3.1	3.3	3.3	3	3	0	2.9	3.3	2.9	3.3	3.3	3.2	3.2	2.8
STOP	3.3	3.1	3.3	3.2	0	0	3.1	3.3	3.3	3	0	0	2.9	3.3	2.9	3.2	3.2	3.2	3.1	2.7
Ref No.	IC8051																			
MODE	21	22	23	24	25	26	27	28	29	30	31	32	33	34	35	36	37	38	39	40
PLAY	1.4	0	0	0	0	1.6	3.3	0	1.6	1.3	1.8	0	0	0	0	0	3.3	1.4	1	0
STOP	1.6	0	0	0.1	0	1.6	3.3	0	1.6	1.6	1.6	0	0	0	0	3.3	3.3	1.6	1	0
Ref No.	IC8051															IC8151				
MODE	41	42	43	44	45	46	47	48	49	50	51	52	53	54		1	2	3	4	5
PLAY	0	0.9	3.3	1	0.9	0	0.9	0.9	3.3	0.9	0.9	0	3	0		3.1	3.1	0	1.2	0.7
STOP	0	2	3.3	1.8	1.8	0	1.8	1.8	3.3	1.8	1.8	0	1.8	0		3.1	3.1	0	1.2	0.7
Ref No.	IC8251																			
MODE	1	2	3	4	5	6	7	8	9	10	11	12	13	14	15	16	17	18	19	20
PLAY	0	1.6	3.3	0	1.7	1.6	1.6	9	4.3	4.3	4.3	4.2	3.5	5	2.8	2.4	2.6	2.5	0	9
STOP	0	1.6	0	0	1.6	1.6	1.6	9	0	0	0	4.3	3.4	3.4	2.6	2.6	2.6	2.6	0	9
Ref No.	IC8251									IC8601					IC8606					
MODE	21	22	23	24	25	26	27	28		1	2	3	4		1	2	3	4	5	
PLAY	5	1.7	1.7	0	3.1	3.1	2.8	1.6		3.3	1.2	0	0		3.3	3.3	0	0	0	
STOP	5.1	1.6	1.6	0	2.4	2.4	1.6	1.6		3.3	1.2	0	0		3.3	3.3	0	0	0	
Ref No.	IC8651																			
MODE	1	2	3	4	5	6	7	8	9	10	11	12	13	14	15	16	17	18	19	20
PLAY	0.8	1.2	2.8	0	0	2.2	0	3.3	1.9	0	3.3	3.3	3.3	0	0.2	0	0	3.3	3.3	0
STOP	0.3	0.8	2.8	1.8	1.3	1.4	1.8	1.5	2.5	0	3.3	3.3	3.3	0	0	0	0	0	1.8	0
Ref No.	IC8651																			
MODE	21	22	23	24	25	26	27	28	29	30	31	32	33	34	35	36	37	38	39	40
PLAY	0	0	0	1.4	2.8	2.4	0	2.6	0	0	0	0	1	0	0	0	0	0	0	0
STOP	1.6	1.8	2.2	2.6	1.2	0	0	0	0	0.7	0	1.7	0.9	0	0	0	0	0.6	0	0
Ref No.	IC8651									Q8251				Q8252				Q8531		
MODE	41	42	43	44	45	46	47	48		B	C	E		B	C	E		B	C	E
PLAY	1.1	1.1	0	0	1.1	0	3.3	0		0	0	0		0	0	0.6		0	0	3.3
STOP	1.2	0	1.2	0	1.1	0	1.7	0		0	0	0		0	0	0.6		0	0	0
Ref No.	Q8532				Q8533					Q8551				Q8552				Q8561		
MODE	B	C	E		B	C	E		B	C	E		B	C	E		B	C	E	
PLAY	0	0	0		0	0	0.6		0	5	0		5	0	5		1.5	3.5	2.2	
STOP	0	0	5		0	5	0		0	5	0		5	0	5		0	5	0	
Ref No.	Q8562				QR8420															
MODE	B	C	E		B	C	E													
PLAY	4.2	1.8	3.6		0	0	0													
STOP	5	0	5		0	0	3.3													

14 BLOCK DIAGRAM

Note:

Circuit voltage and waveform described herein shall be regarded as reference information when probing defect point, because it may differ from an actual measuring value due to difference of measuring instrument and its measuring condition and product itself.

14.1. OVERALL BLOCK DIAGRAM

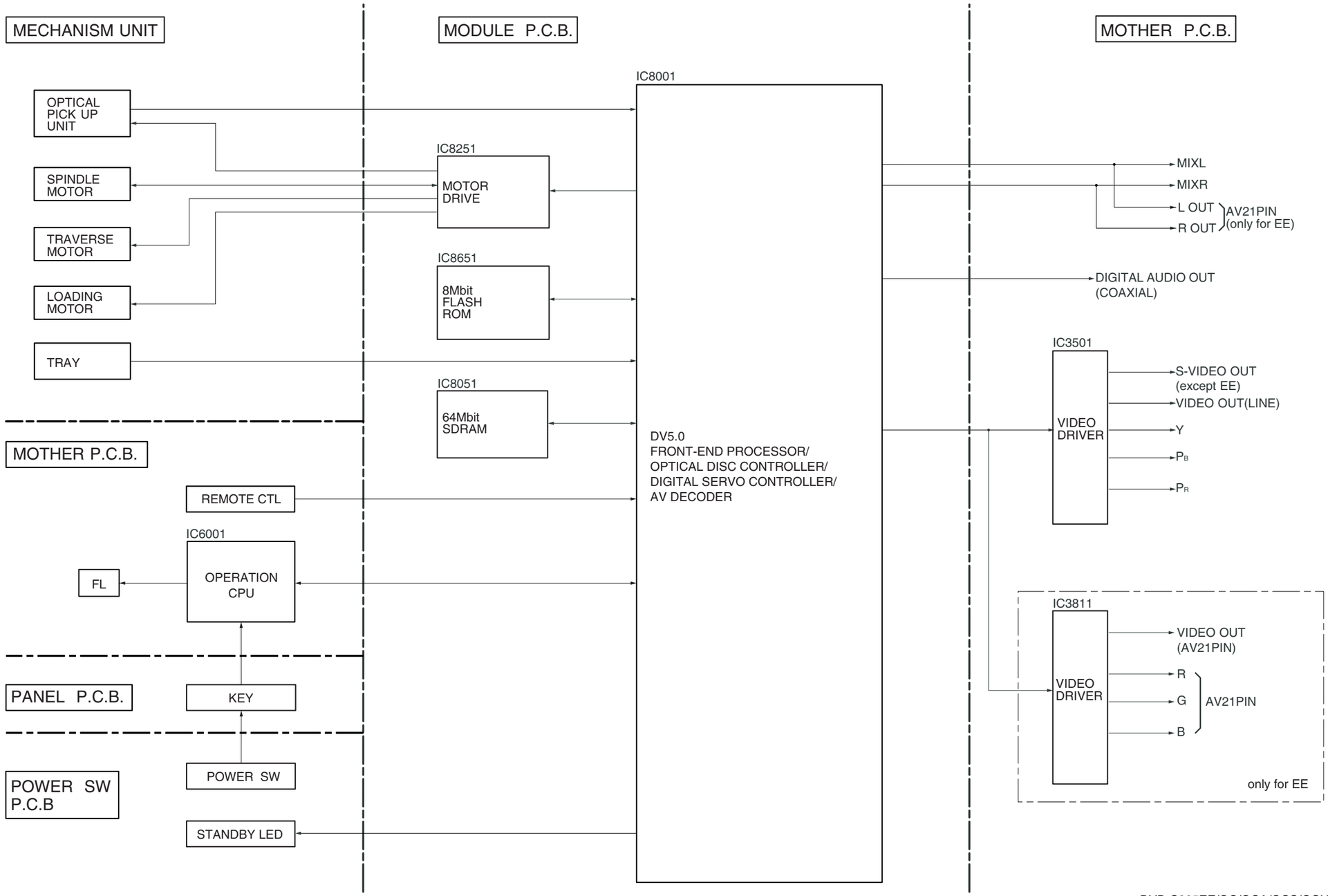

DVD-S325EE/GC/GCA/GCS/GCU
OVERALL BLOCK DIAGRAM

14.2. POWER SUPPLY BLOCK DIAGRAM

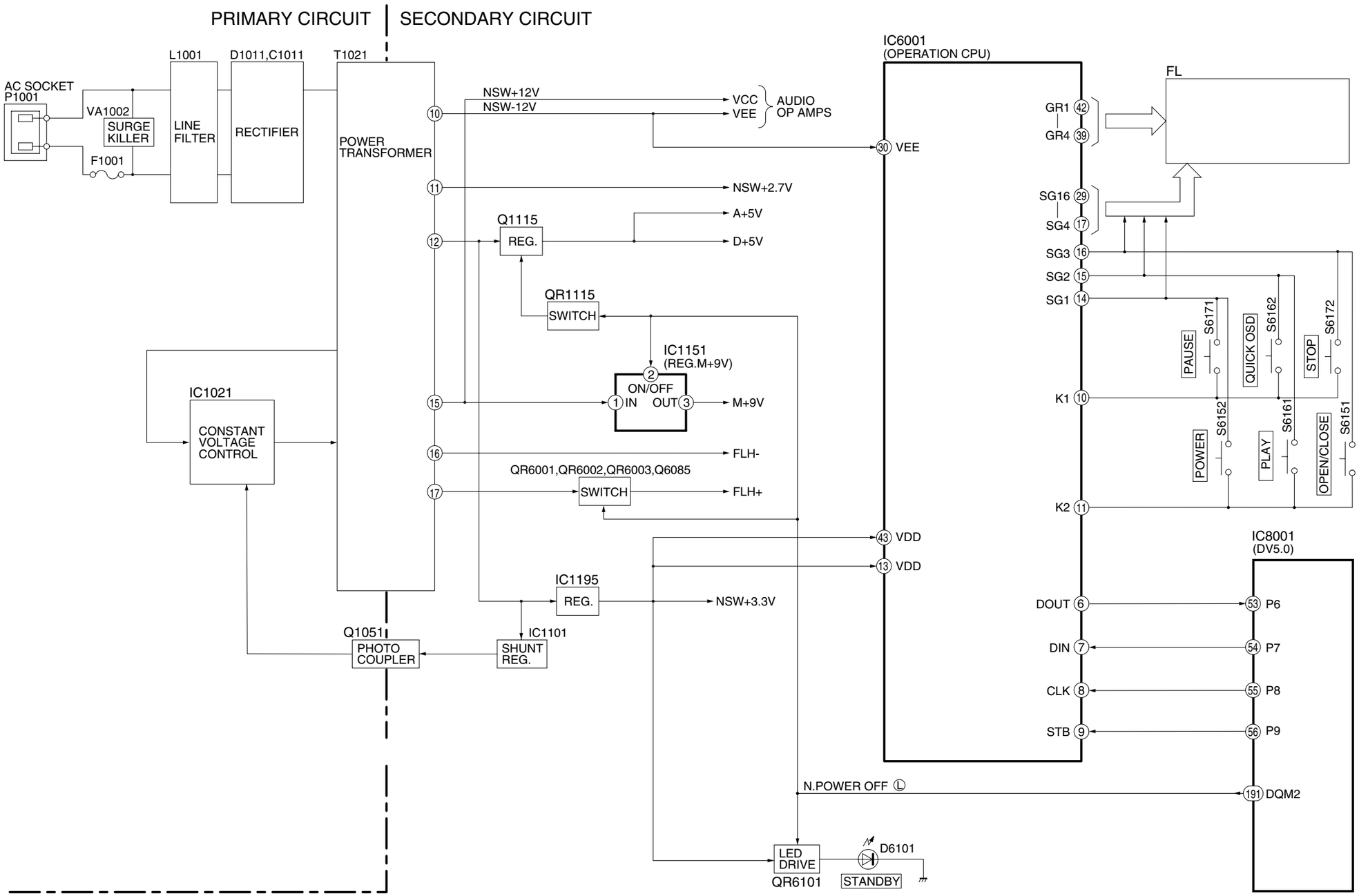

DVD-S325EE/GC/GCA/GCS/GCU
POWER SUPPLY BLOCK DIAGRAM

14.3. SERVO BLOCK DIAGRAM

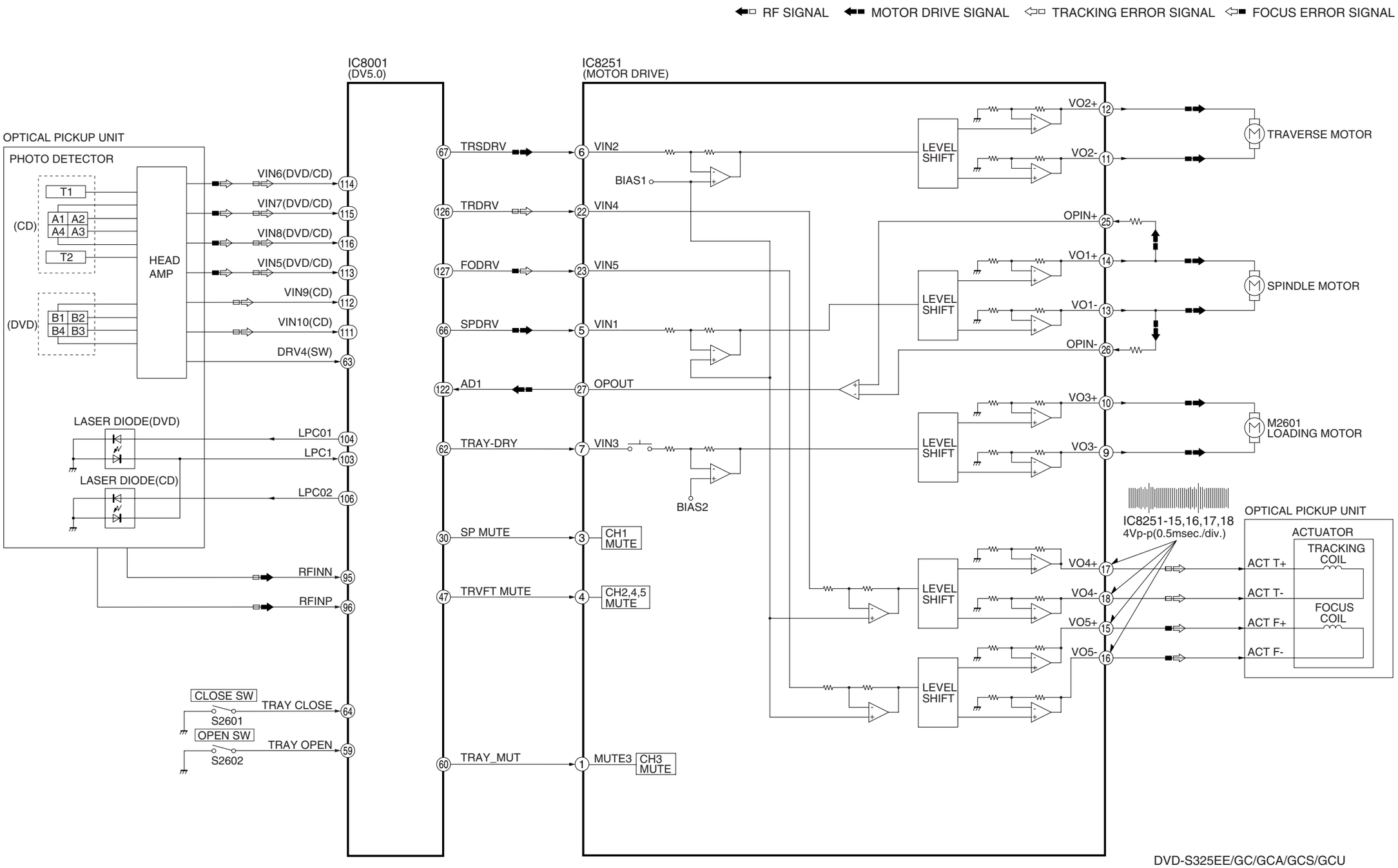

DVD-S325EE/GC/GCA/GCS/GCU
SERVO BLOCK DIAGRAM

14.4. VIDEO BLOCK DIAGRAM (DVD-S325EE)

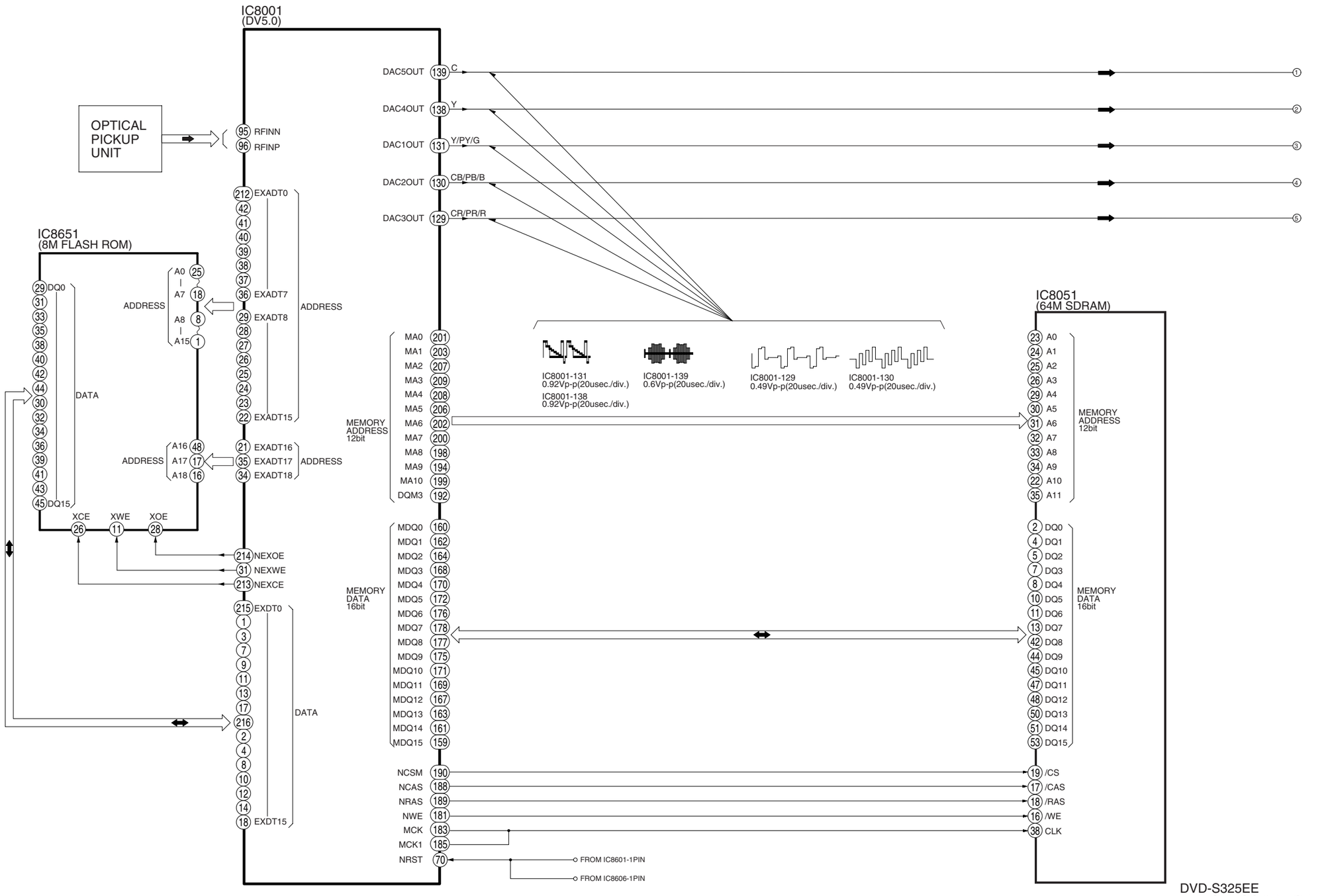

DVD-S325EE
VIDEO BLOCK DIAGRAM

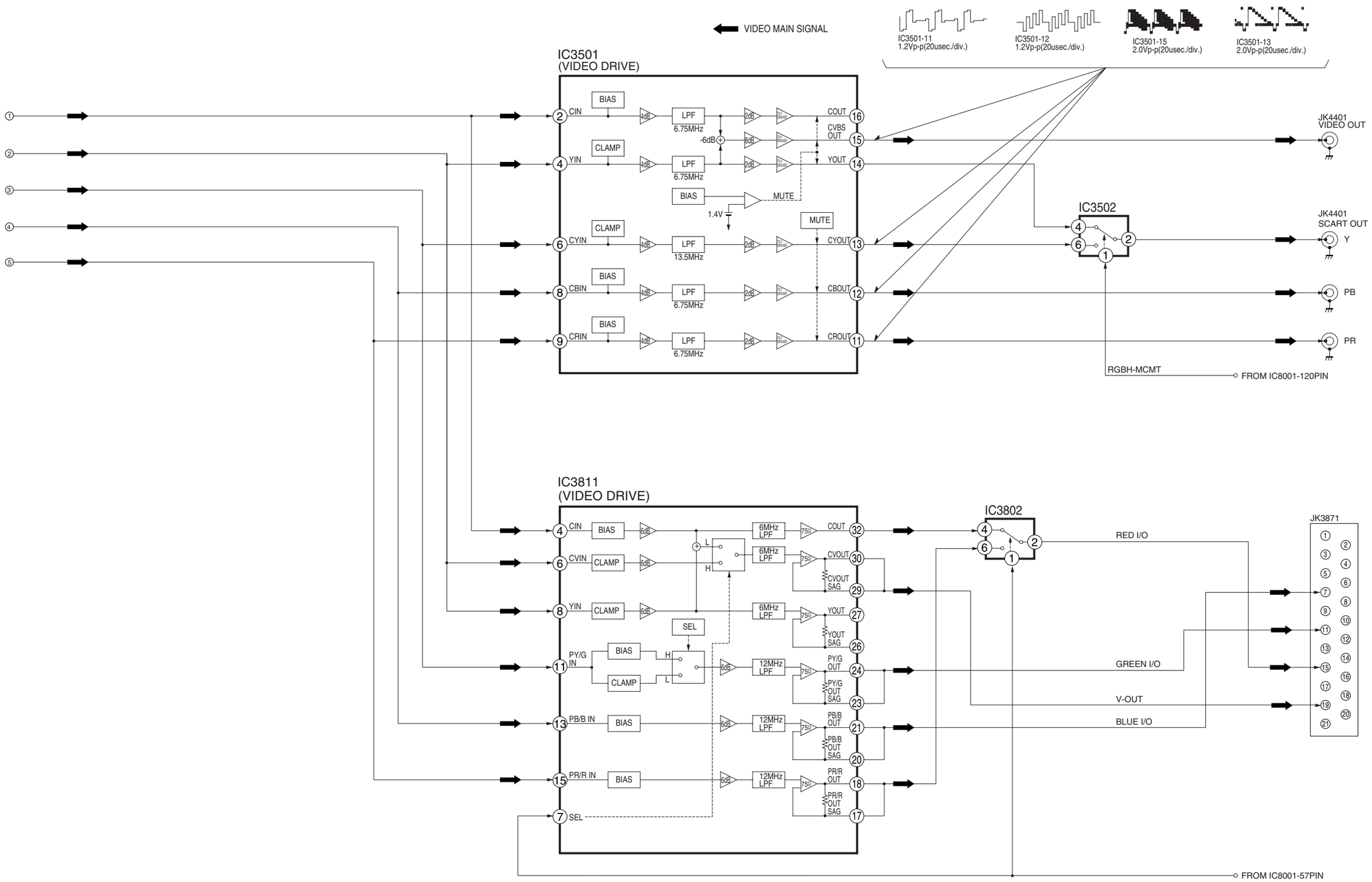

DVD-S325EE
VIDEO BLOCK DIAGRAM

14.5. VIDEO BLOCK DIAGRAM (DVD-S325GC/GCA/GCS/GCU)

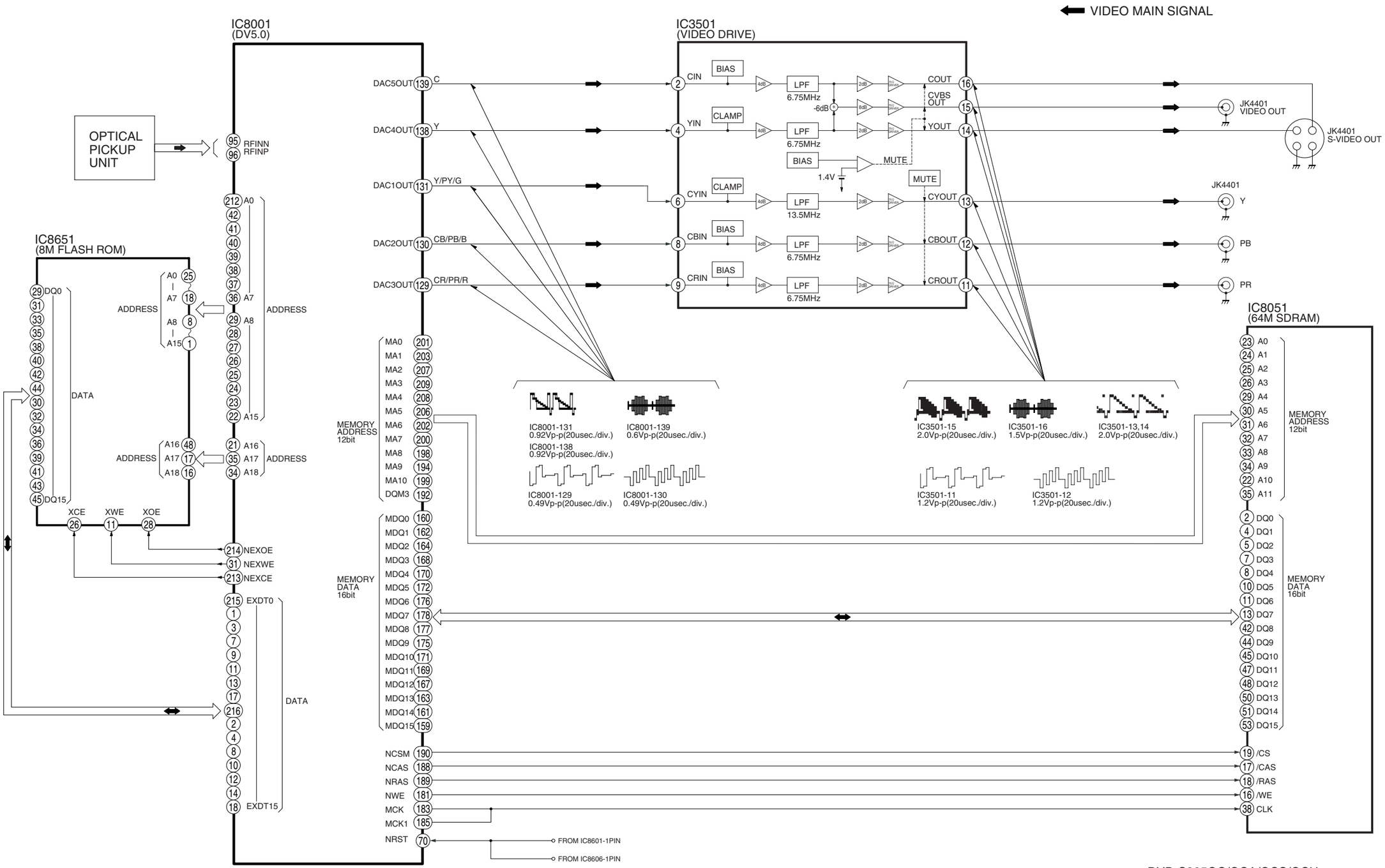

DVD-S325GC/GCA/GCS/GCU
VIDEO BLOCK DIAGR AM

14.6. AUDIO BLOCK DIAGRAM

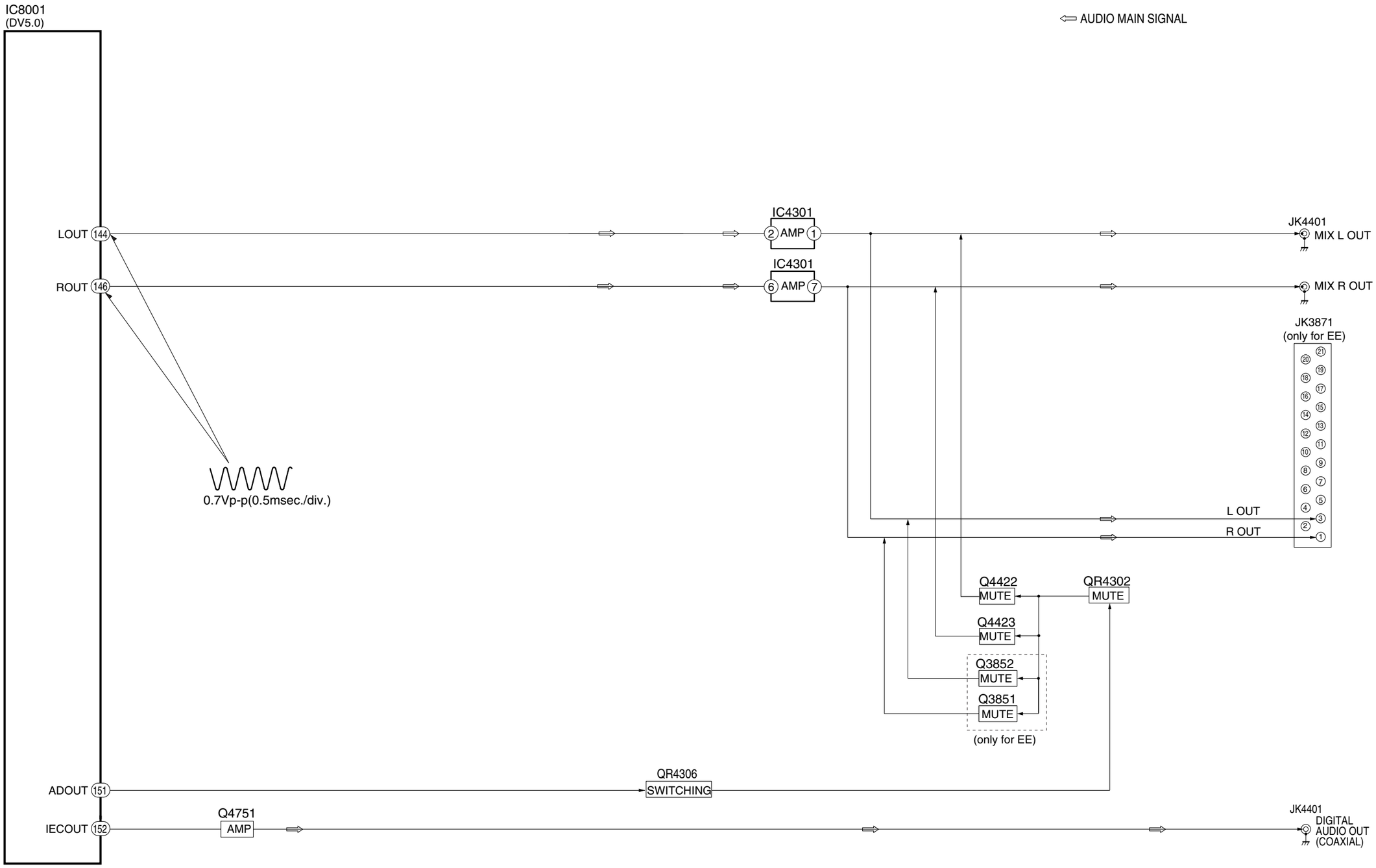

DVD-S325EE/GC/GCA/GCS/GCU
AUDIO BLOCK DIAGRAMA

15 INTERCONNECTION SCHEMATIC DIAGRAM & SCHEMATIC DIAGRAM NOTES

15.1. INTERCONNECTION SCHEMATIC DIAGRAM

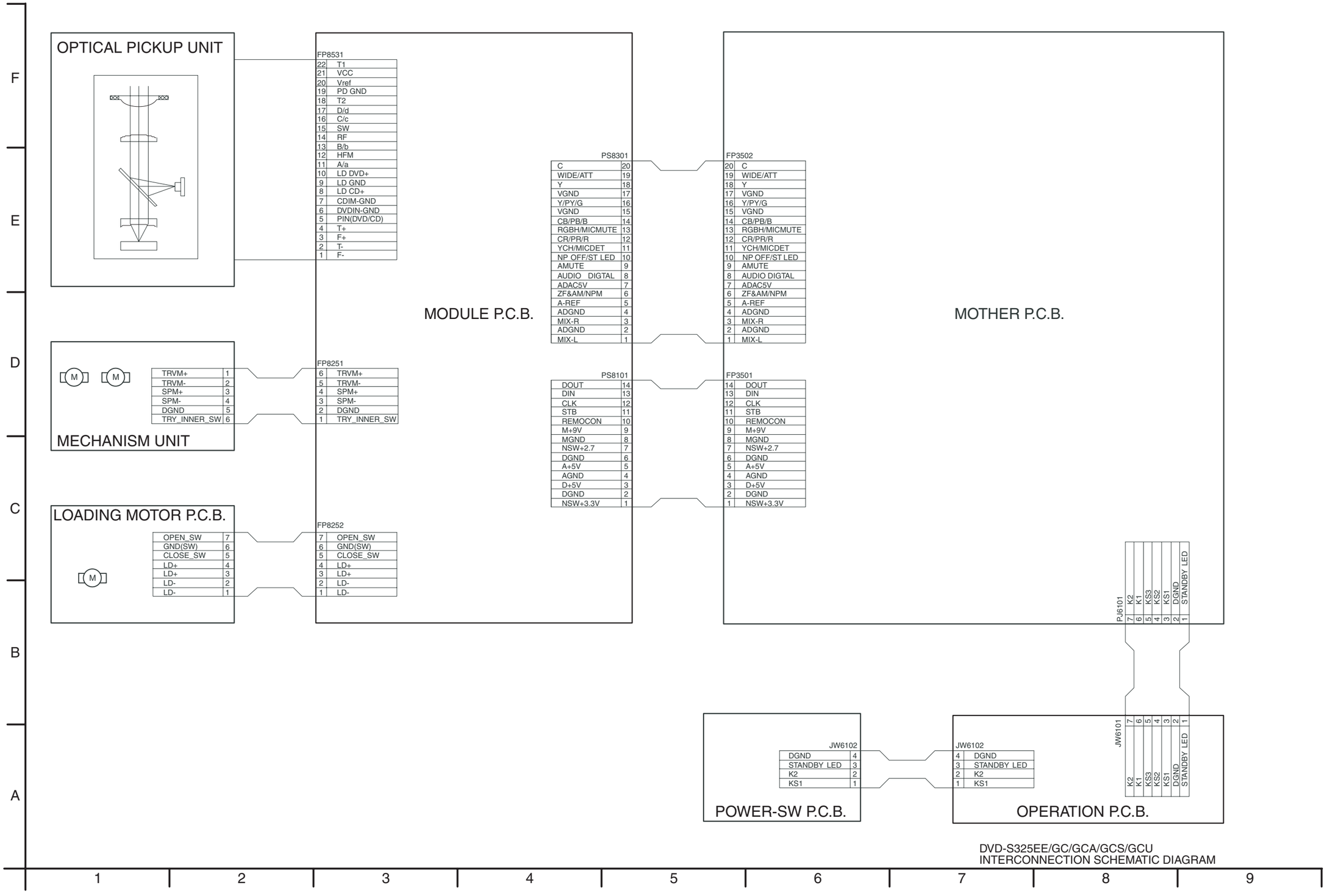

15.2. SCHEMATIC DIAGRAM NOTES

This schematic diagram may be modified at any time with the development of new technology.

Important safety notice:

Components identified by ⚠ mark have special characteristics important for safety.

Furthermore, special parts which have purpose of fire-retardant (resistors), high-quality sound (capacitors), low-noise (resistors), etc. are used. When replacing any of components, be sure to use only manufacture´s specified parts shownin theparts list.

Important safety notice:

There are special components used in this equipment which are important for safety.

These parts are marked by ⚠ in the schematic diagrams. It is essential that these critical parts should be replaced with manufacturer's specified parts to prevent shock, fire, or other hazards. Do not modify the original designwithout permission of manufacturer.

Caution!

IC and LSI are sensitive to static electricity.

Secondary trouble can be prevented by taking care during repair.

Cover the parts boxes made of plastics with aluminum foil.

Ground the soldering iron.

Put a conductive mat on the work table.

Do not touch the legs of IC or LSI with the fingers directly.

16 SCHEMATIC DIAGRAM

16.1. POWER SUPPLY SECTION (MOTHER P.C.B. (1 / 2)) SCHEMATIC DIAGRAM

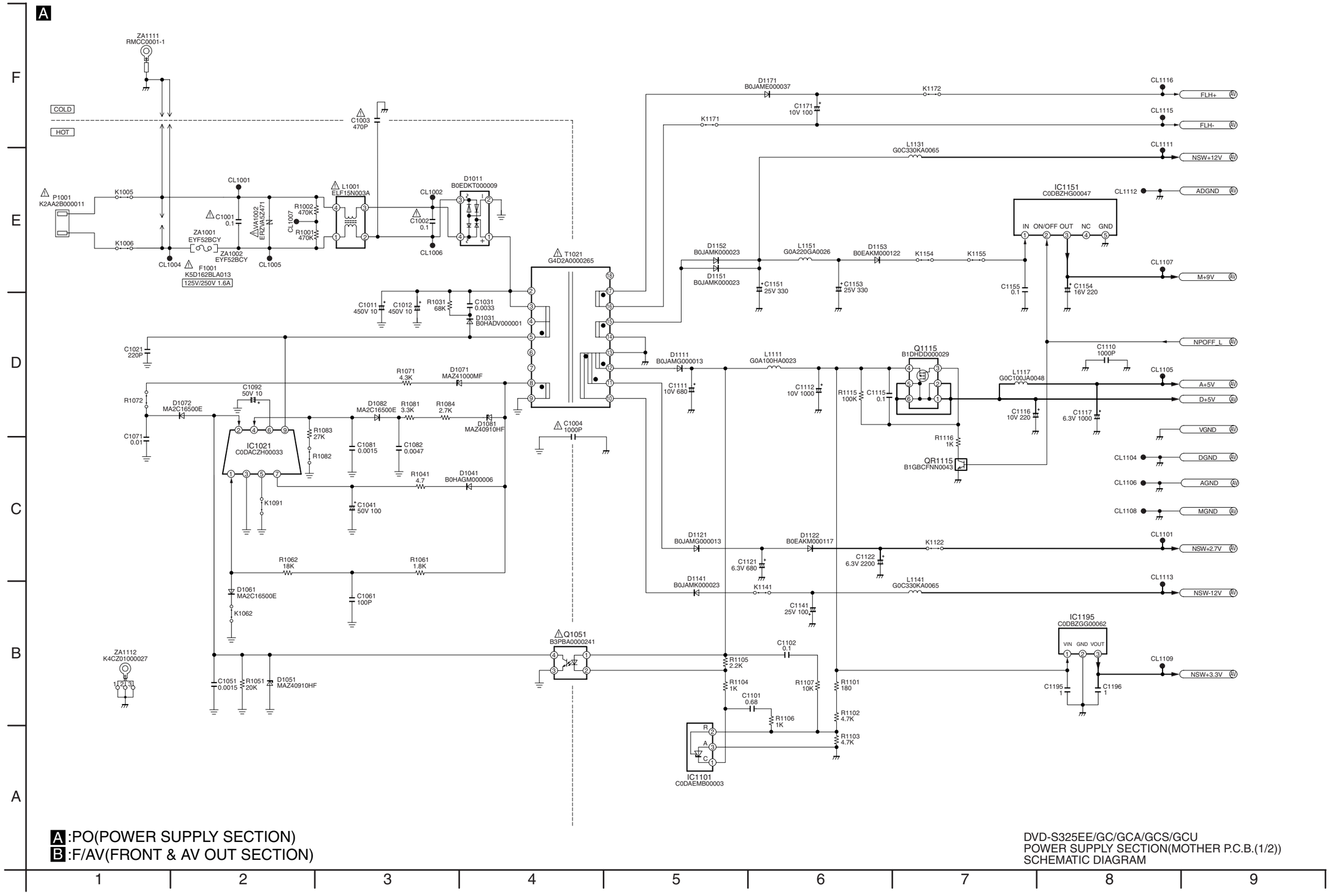

A :PO(POWER SUPPLY SECTION)
B :F/AV(FRONT & AV OUT SECTION)

DVD-S325EE/GC/GCA/GCS/GCU
POWER SUPPLY SECTION(MOTHER P.C.B.(1/2))
SCHEMATIC DIAGRAM

16.2. FRONT & AV OUT SECTION (MOTHER P.C.B. (2 / 2)) SCHEMATIC DIAGRAM (DVD-S325EE)

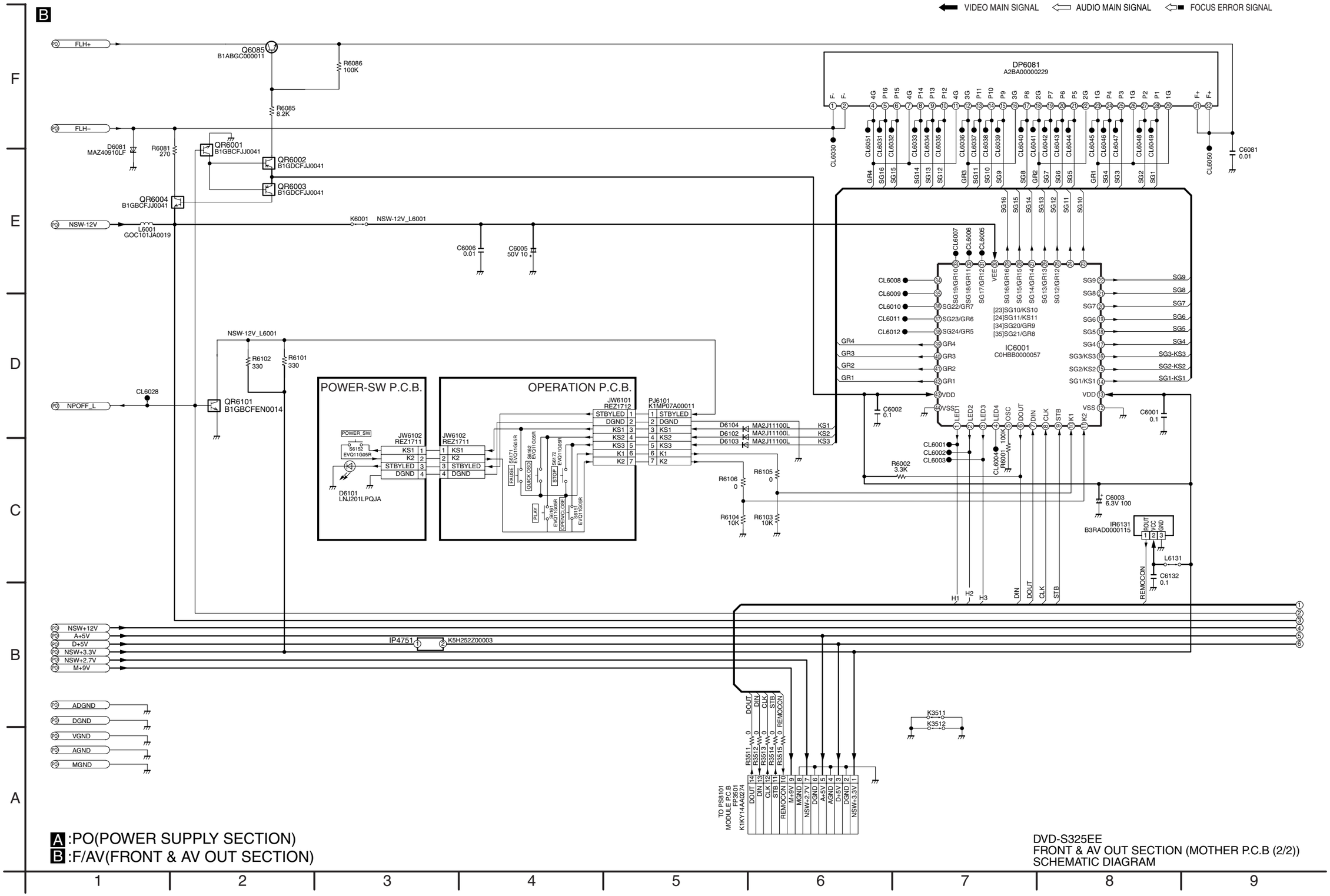

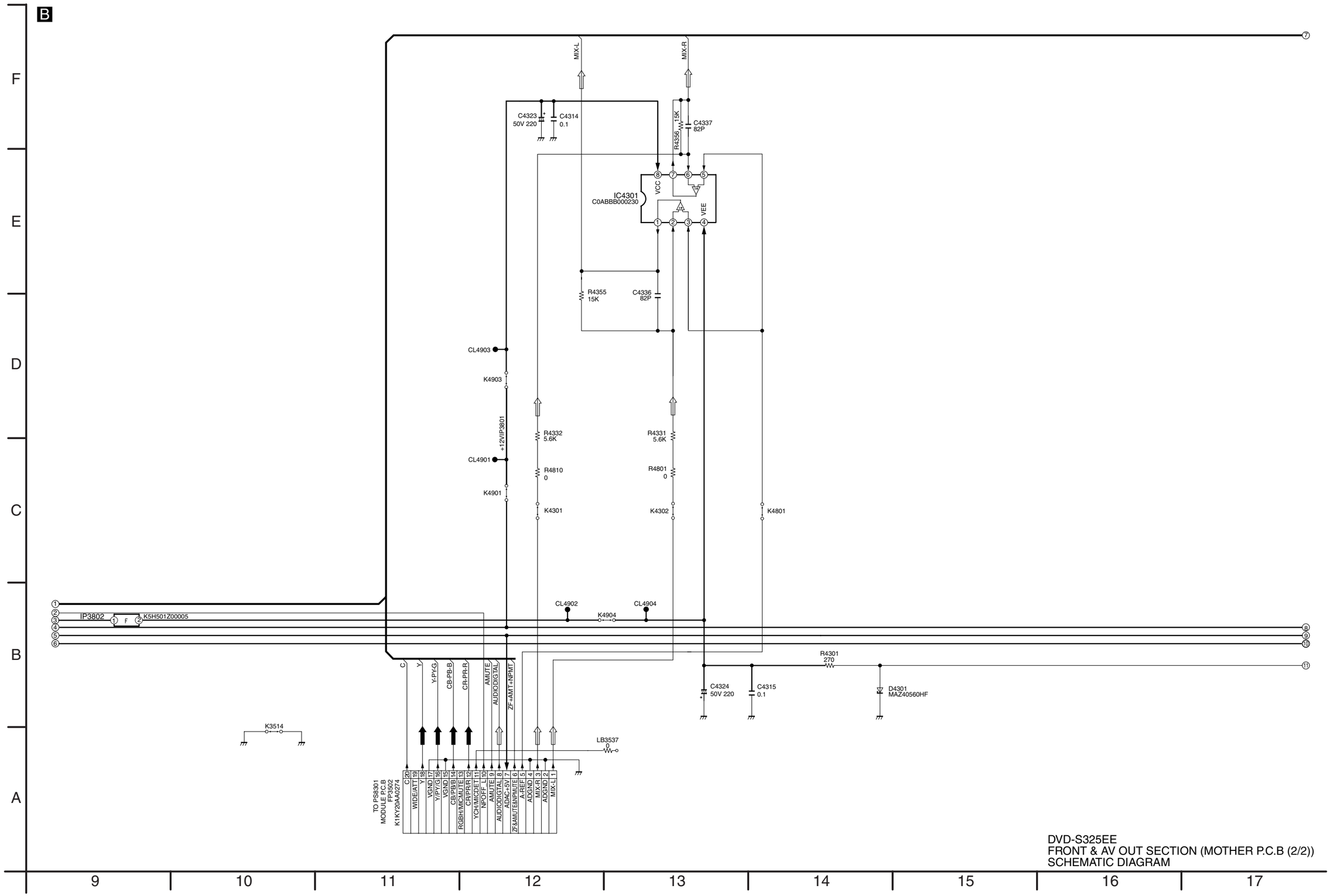
B
F
E
D
C
B
A
MIX-L
MIX-R
C4323
50V 220
C4314
0.1
R4356
15K
C4337
82P
IC4301
C0ABBB000230
VCC
VEE
R4355
15K
C4336
82P
CL4903
K4903
+12VIP3801
R4332
5.6K
R4331
5.6K
CL4901
R4810
0
R4801
0
K4901
K4301
K4302
K4801
CL4902
CL4904
K4904
IP3802
K5H501Z00005
R4301
270
C4324
50V 220
C4315
0.1
D4301
MAZ40560HF
K3514
LB3537
0
C
Y
Y-PY-G
CB-PB-B
CR-PR-R
AMUTE
AUDIODIGTAL
ZF+AMT+NPMT
TO PS8301
MODULE P.C.B
FP3502
K1KY20A0274
C
WIDE/ATT
Y
VGND
Y/PY/G
VGND
CB/PB/B
RGBH/MCMUTE
CR/PR/R
YCH/MCDET
NPOFF_L
AMUTE
AUDIODIGTAL
ADAC+5V
ZF&AMUTE&NPMUTE
A-REF
ADGND
MIX-R
ADGND
MIX-L
20
19
18
17
16
15
14
13
12
11
10
9
8
7
6
5
4
3
2
1
DVD-S325EE
FRONT & AV OUT SECTION (MOTHER P.C.B (2/2))
SCHEMATIC DIAGRAM
9
10
11
12
13
14
15
16
17

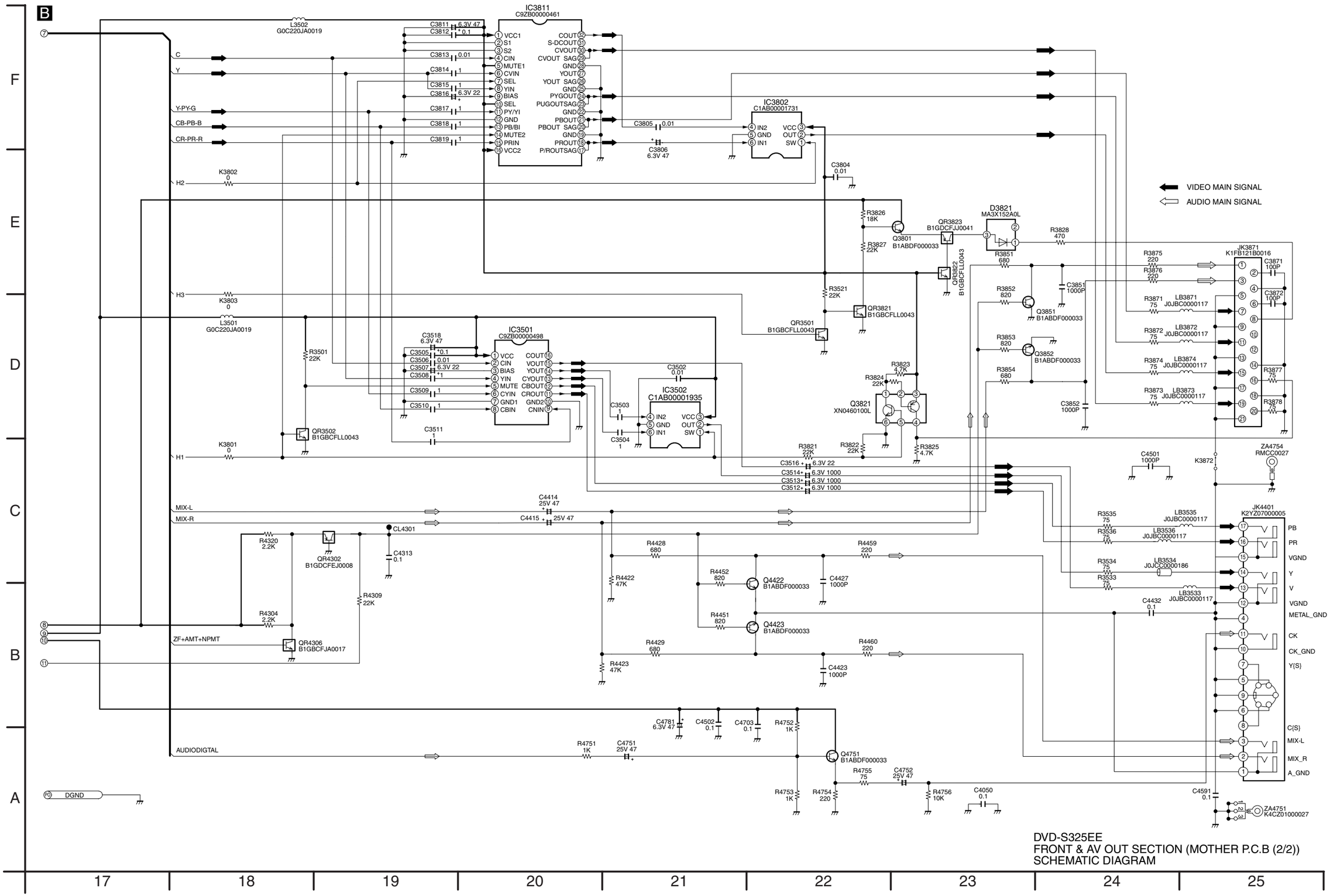
IC3811
C9ZB00000461
IC3802
C1AB00001731
IC3501
C9ZB00000498
IC3502
C1AB00001935
VIDEO MAIN SIGNAL
AUDIO MAIN SIGNAL
JK3871
K1FB121B0016
JK4401
K2YZ07000005
ZA4754
RMCC0027
ZA4751
K4CZ01000027
DGND
DVD-S325EE
FRONT & AV OUT SECTION (MOTHER P.C.B (2/2))
SCHEMATIC DIAGRAM

16.3. FRONT & AV OUT SECTION (MOTHER P.C.B. (2 / 2)) SCHEMATIC DIAGRAM (DVD-S325GC/GCA/GCS/GCU)

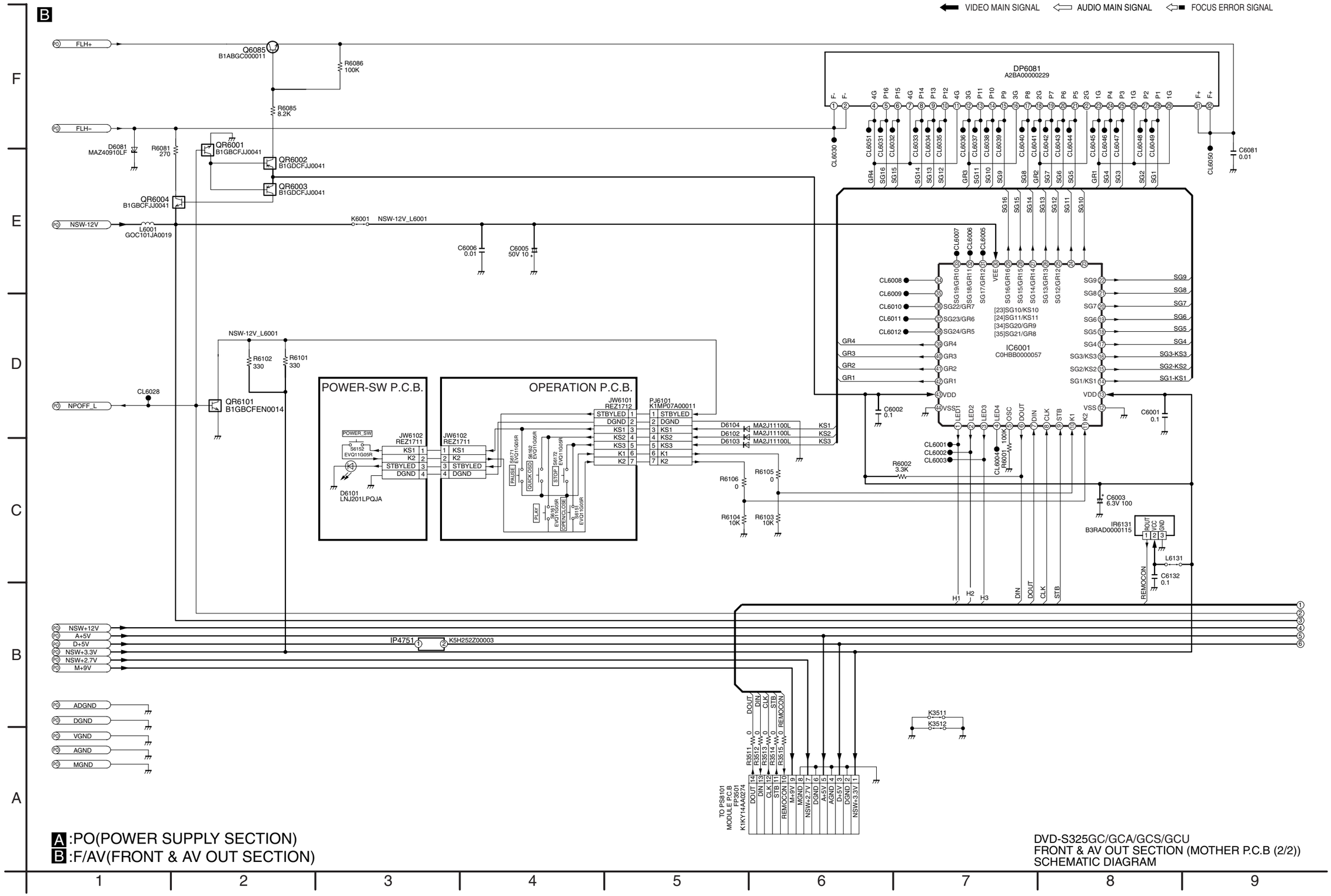

A :PO(POWER SUPPLY SECTION)
B :F/AV(FRONT & AV OUT SECTION)

DVD-S325GC/GCA/GCS/GCU
FRONT & AV OUT SECTION (MOTHER P.C.B (2/2))
SCHEMATIC DIAGRAM

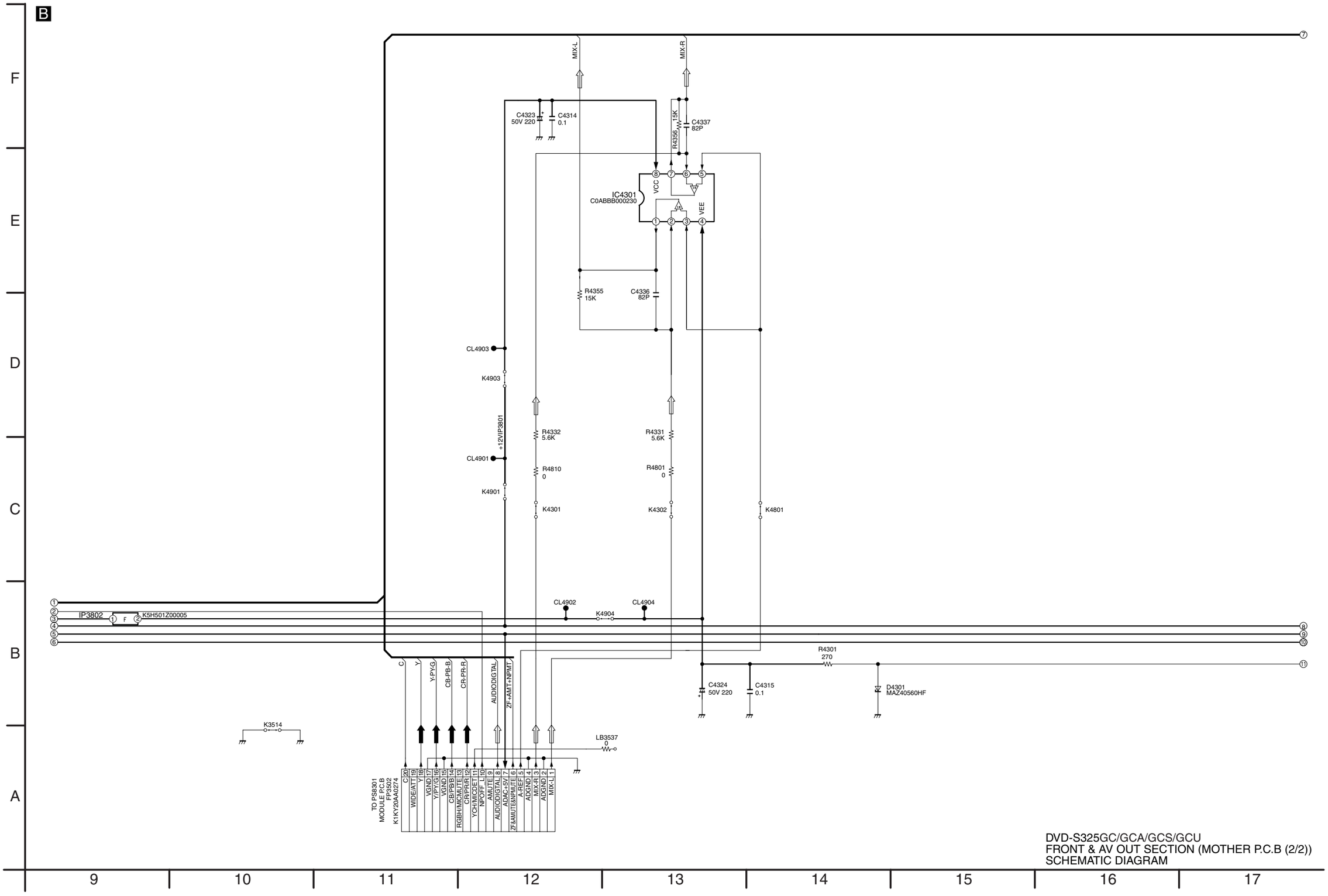

DVD-S325GC/GCA/GCS/GCU
FRONT & AV OUT SECTION (MOTHER P.C.B (2/2))
SCHEMATIC DIAGRAM

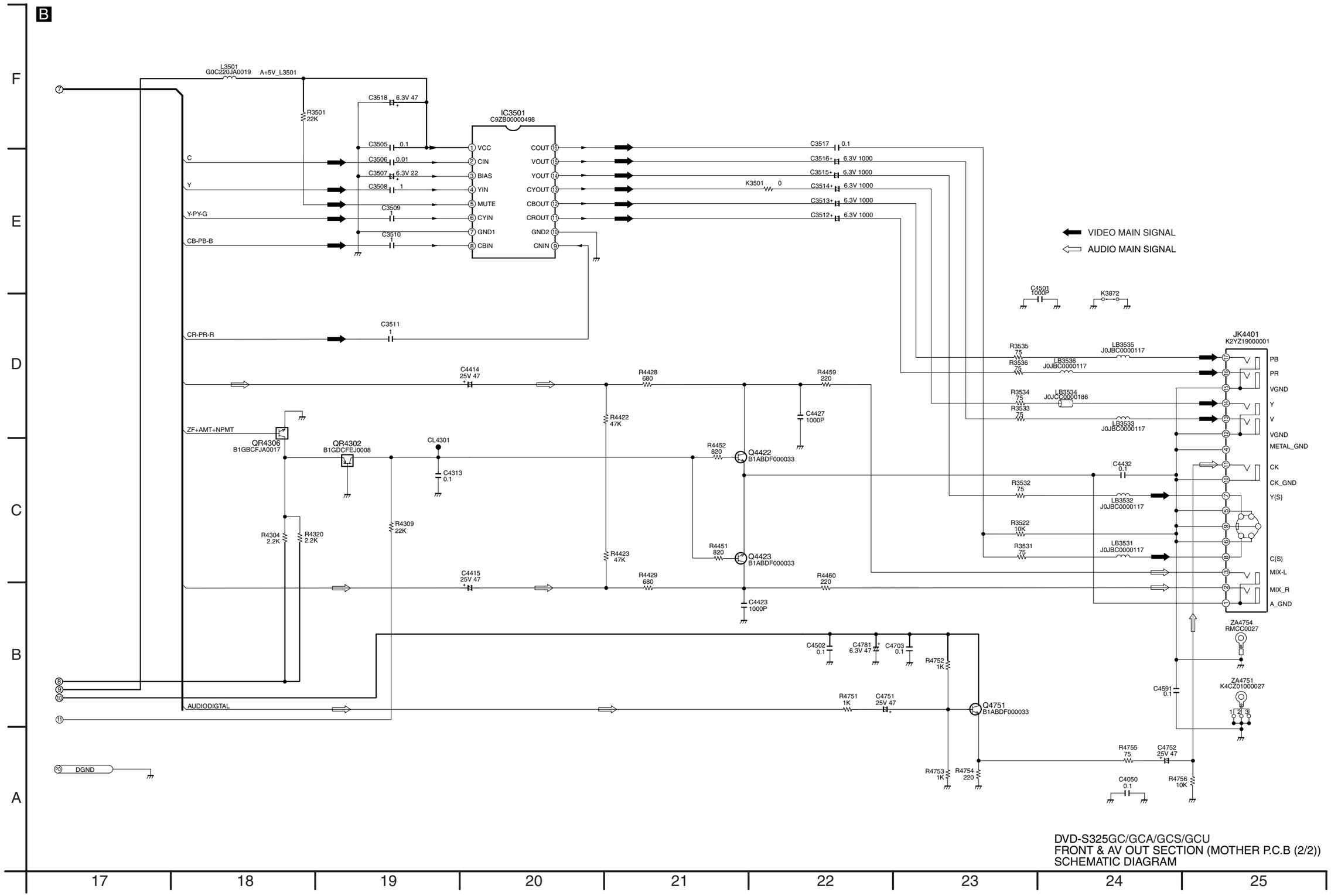

DVD-S325GC/GCA/GCS/GCU
FRONT & AV OUT SECTION (MOTHER P.C.B (2/2))
SCHEMATIC DIAGRAM

16.4. MODULE SCHEMATIC DIAGRAM

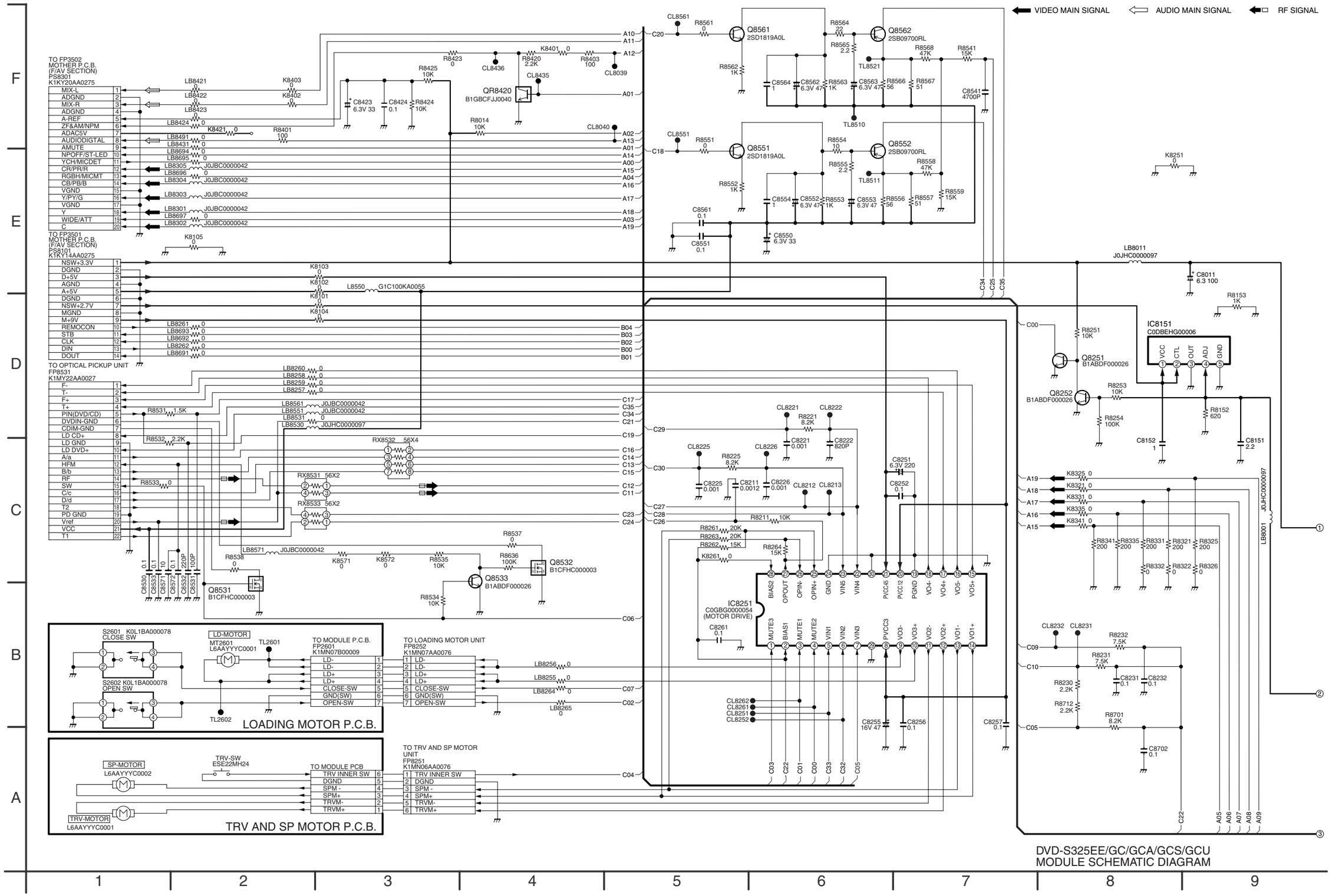

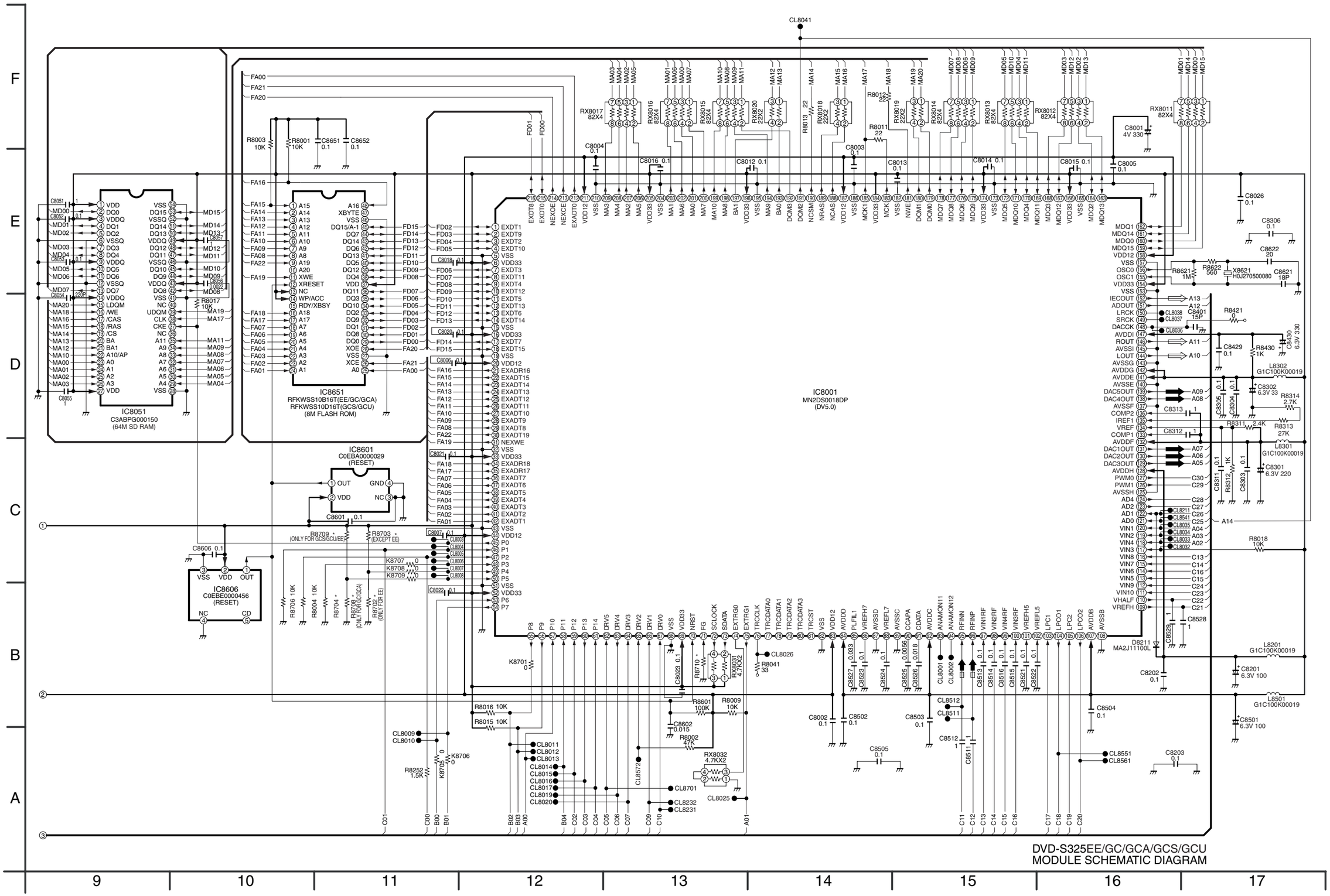
IC8051
C3ABPG000150
(64M SD RAM)
IC8651
RFKWSS10B16T(EE/GC/GCA)
RFKWSS10D16T(GCS/GCU)
(8M FLASH ROM)
IC8601
C0EBA0000029
(RESET)
IC8606
C0EBE0000456
(RESET)
IC8001
MN2DS0018DP
(DV5.0)
CL8041
DVD-S325EE/GC/GCA/GCS/GCU
MODULE SCHEMATIC DIAGRAM

17 PRINT CIRCUIT BOARD

17.1. MOTHER P.C.B. (DVD-S325EE)

MOTHER P.C.B.

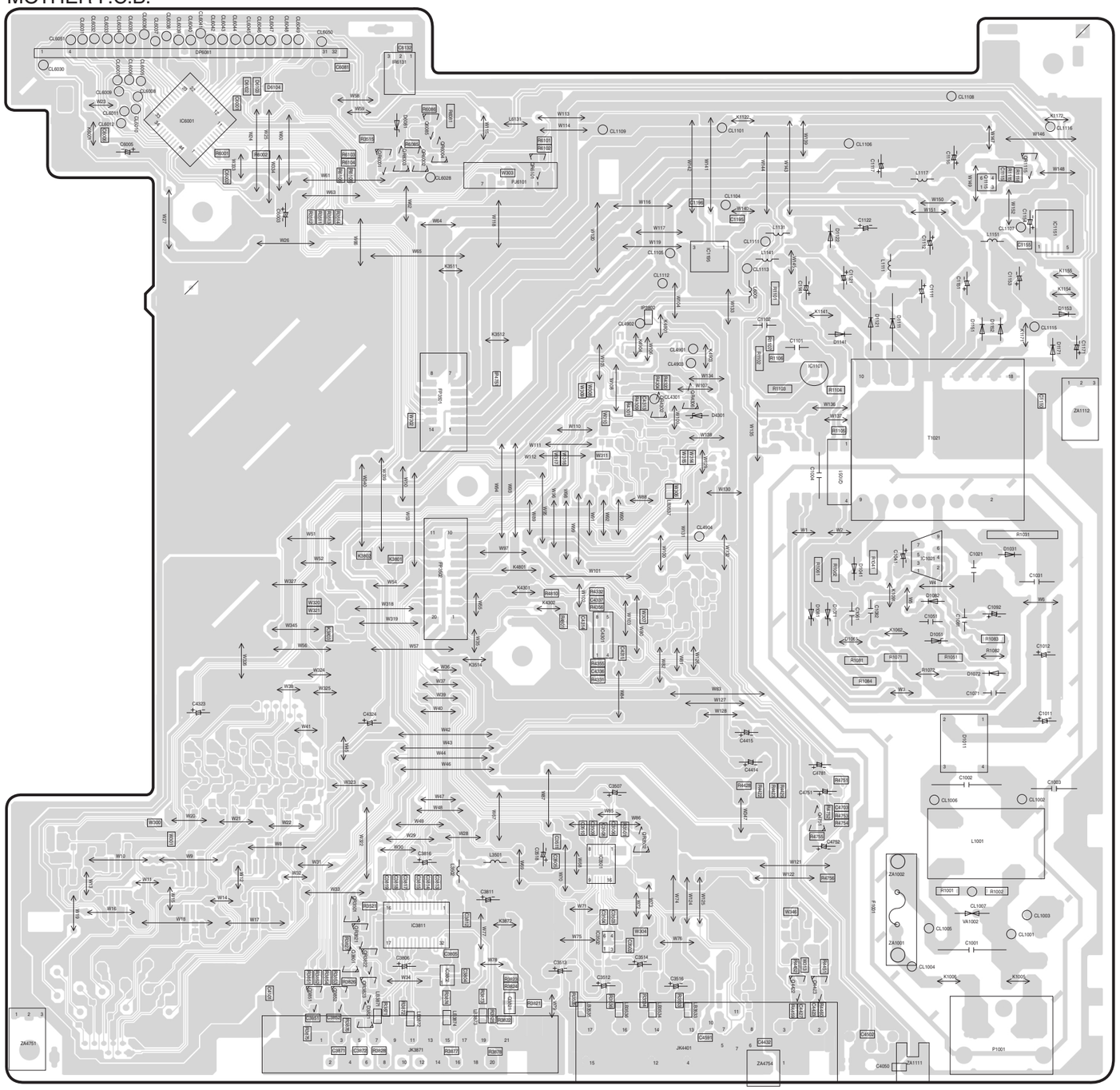

OPERATION P.C.B.

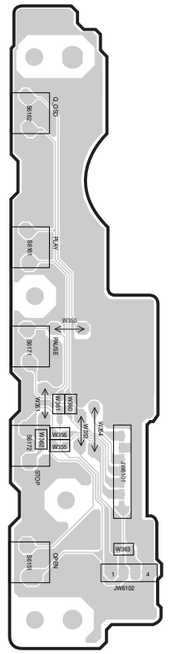

POWER SW P.C.B.

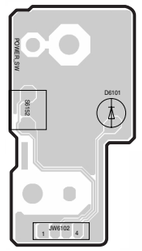

DVD-S325EE
MOTHER P.C.B.(VEP76147D)
OPERATION P.C.B.(VEP70137A)
POWER SW P.C.B.(VEP70138A)

17.2. MOTHER P.C.B. ADDRESS INFORMATION (DVD-S325EE)

MOTHER P.C.B.

Transistor	
Q1051	D-5
Q1115	E-6
Q3801	A-3
Q3821	A-3
Q3851	A-2
Q3852	A-2
Q4422	A-5
Q4423	A-5
Q4751	B-5
Q6085	F-3
Transistor-resistor	
QR1115	F-6
QR3501	B-3
QR3502	B-4
QR3821	B-3
QR3822	A-3
QR3823	A-3
QR4302	D-4
QR4306	D-4
QR6001	F-3
QR6002	F-3
QR6003	F-3
QR6004	F-3
QR6101	F-3
Integrated Circuit	
IC1021	C-6
IC1101	D-5
IC1151	E-6
IC1195	E-4
IC3501	B-4
IC3502	A-4
IC3802	A-3
IC3811	B-3
IC4301	C-4
IC6001	F-2
Test Point	
CL1001	A-6
CL1002	B-6
CL1003	B-6
CL1004	A-5
CL1005	A-6
CL1006	B-6
CL1007	B-6
CL1101	F-4
CL1104	E-4
CL1105	E-4
CL1106	F-5
CL1107	E-6
CL1108	F-6
CL1109	F-4
CL1111	E-5
CL1112	E-4
CL1113	E-5
CL1115	E-6
CL1116	F-6
CL4301	D-4
CL4901	E-4
CL4902	E-4
CL4903	D-4
CL4904	D-4
CL6001	E-2
CL6002	E-2
CL6003	E-2
CL6004	E-2
CL6005	F-1
CL6006	F-1
CL6007	F-1
CL6008	F-1
CL6009	F-1
CL6010	F-1
CL6011	F-1
CL6012	F-1
CL6028	E-3
CL6030	F-1
CL6031	F-1
CL6032	F-1
CL6033	F-1
CL6034	F-1
CL6035	F-1
CL6036	F-1
CL6037	F-1
CL6038	F-2
CL6039	F-2
CL6040	F-2
CL6041	F-2
CL6042	F-2
CL6043	F-2
CL6044	F-2
CL6045	F-2
CL6046	F-2
CL6047	F-2
CL6048	F-2
CL6049	F-2
CL6050	F-2
CL6051	F-1
Connector	
FP3501	D-3
FP3502	C-3
P1001	A-6
PJ6101	E-3
JK3871	A-3
JK4401	A-4
Transformer	
T1021	D-6

ADDRESS INFORMATION

17.3. MOTHER P.C.B. (DVD-S325GC/GCA/GCS/GCU)

MOTHER P.C.B.

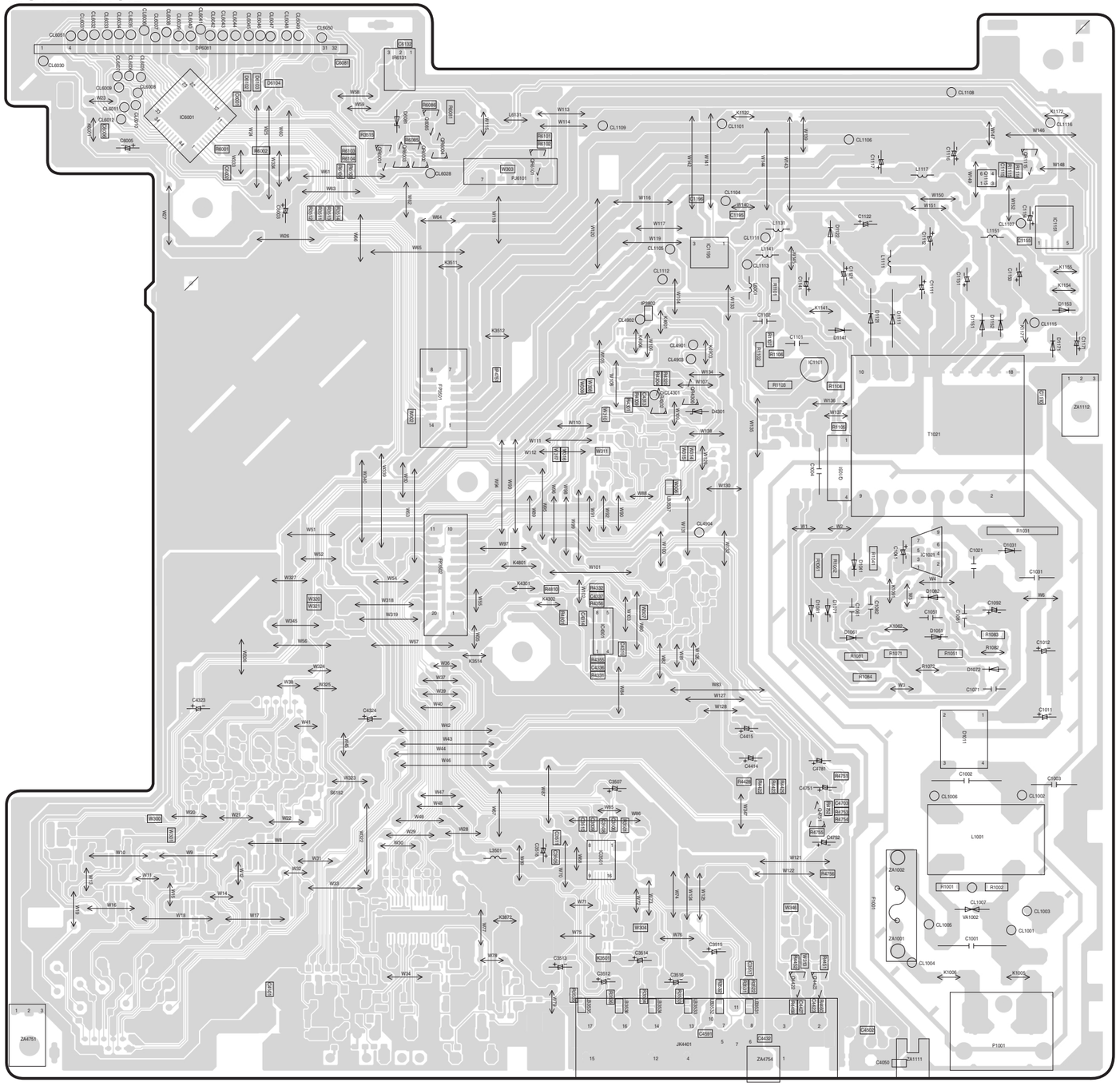

OPERATION P.C.B.

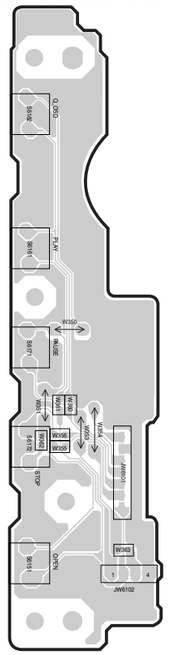

POWER SW P.C.B.

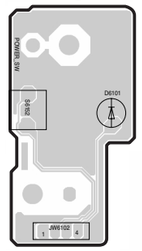

DVD-S325GC/GCA/GCS/GCU
MOTHER P.C.B.(VEP76147B)
OPERATION P.C.B.(VEP70137A)
POWER SW P.C.B.(VEP70138A)

17.4. MOTHER P.C.B. ADDRESS INFORMATION (DVD-S325GC/GCA/GCS/GCU)

MOTHER P.C.B.

Transistor	
Q1051	D-5
Q1115	E-6
Q4422	A-5
Q4423	A-5
Q4751	B-5
Q6085	F-3
Transistor-resistor	
QR1115	F-6
QR4302	D-4
QR4306	D-4
QR6001	F-3
QR6002	F-3
QR6003	F-3
QR6004	F-3
QR6101	F-3
Integrated Circuit	
IC1021	C-6
IC1101	D-5
IC1151	E-6
IC1195	E-4
IC3501	B-4
IC4301	C-4
IC6001	
Test Point	
CL1001	A-6
CL1002	B-6
CL1003	B-6
CL1004	A-5
CL1005	A-6
CL1006	B-6
CL1007	B-6
CL1101	F-4
CL1104	E-4
CL1105	E-4
CL1106	F-5
CL1107	E-6
CL1108	F-6
CL1109	F-4
CL1111	E-5
CL1112	E-4
CL1113	E-5
CL1115	E-6
CL1116	F-6
CL4301	D-4
CL4901	E-4
CL4902	E-4
CL4903	D-4
CL4904	D-4
CL6001	E-2
CL6002	E-2
CL6003	E-2
CL6004	E-2
CL6005	F-1
CL6006	F-1
CL6007	F-1
CL6008	F-1
CL6009	F-1
CL6010	F-1
CL6011	F-1
CL6012	F-1
CL6028	E-3
CL6030	F-1
CL6031	F-1
CL6032	F-1
CL6033	F-1
CL6034	F-1
CL6035	F-1
CL6036	F-1
CL6037	F-1
CL6038	F-2
CL6039	F-2
CL6040	F-2
CL6041	F-2
CL6042	F-2
CL6043	F-2
CL6044	F-2
CL6045	F-2
CL6046	F-2
CL6047	F-2
CL6048	F-2
CL6049	F-2
CL6050	F-2
CL6051	F-1
Connector	
FP3501	D-3
FP3502	C-3
P1001	A-6
PJ6101	E-3
JK4401	A-4
Transformer	
T1021	D-6

ADDRESS INFORMATION

17.5. MODULE P.C.B. (1/2)

MODULE P.C.B. (1/2)

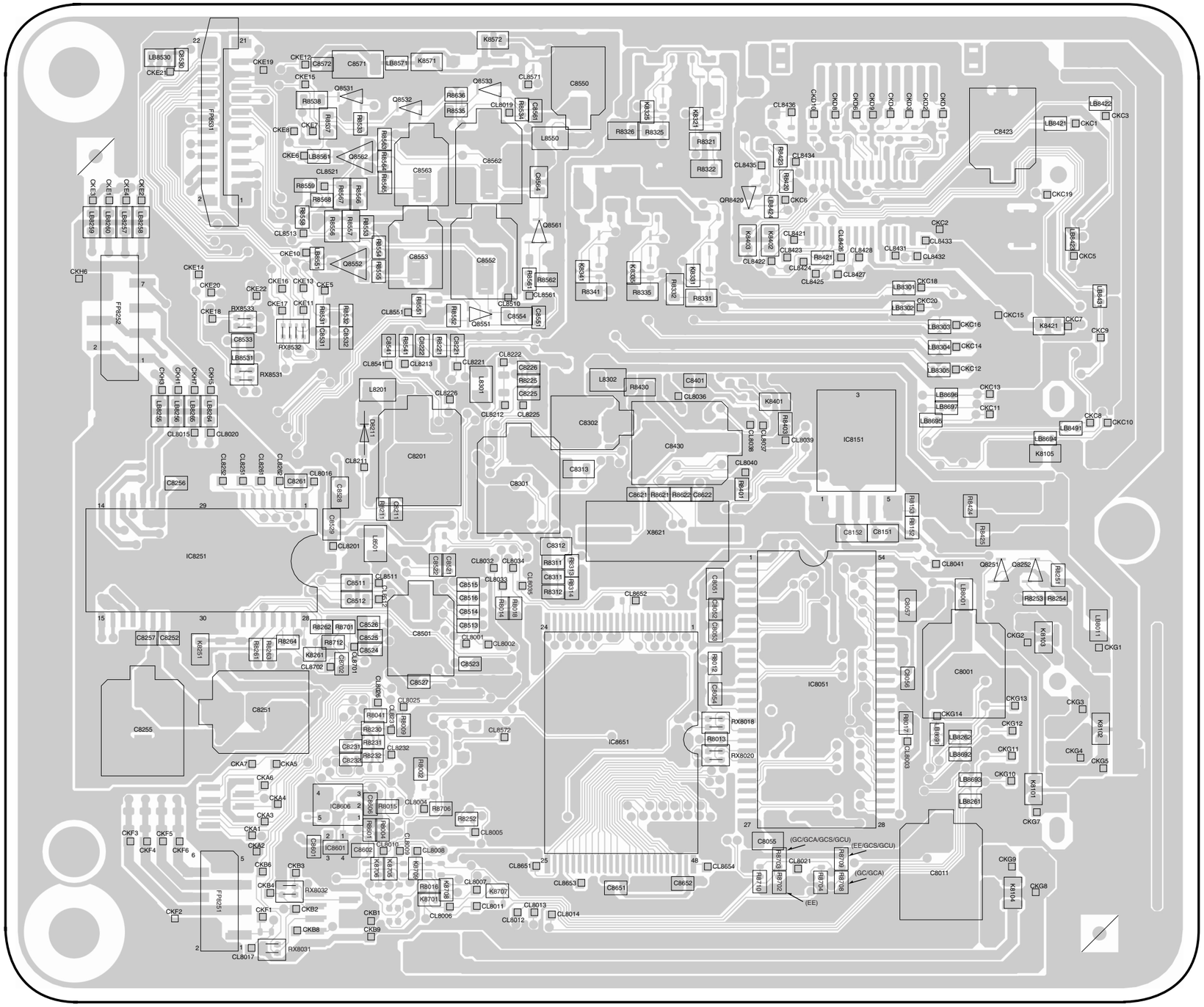

(COMPONENT SIDE)

LOADING MOTOR P.C.B.

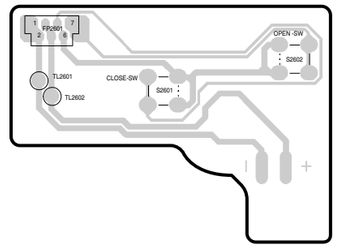

TRV AND SP MOTOR P.C.B.

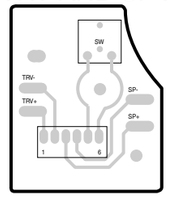

DVD-S325EE/GC/GCA/GCS/GCU
MODULE P.C.B.(1/2)(VEP79143B:EE)
(VEP79143D:GCS/GCU)
(VEP79143C:GC/GCA)
LOADING MOTOR P.C.B.(VEP70114A-1)
TRV AND SP MOTOR P.C.B.(VEP70140A)

17.6. MODULE P.C.B. (2/2)

MODULE P.C.B. (2/2)

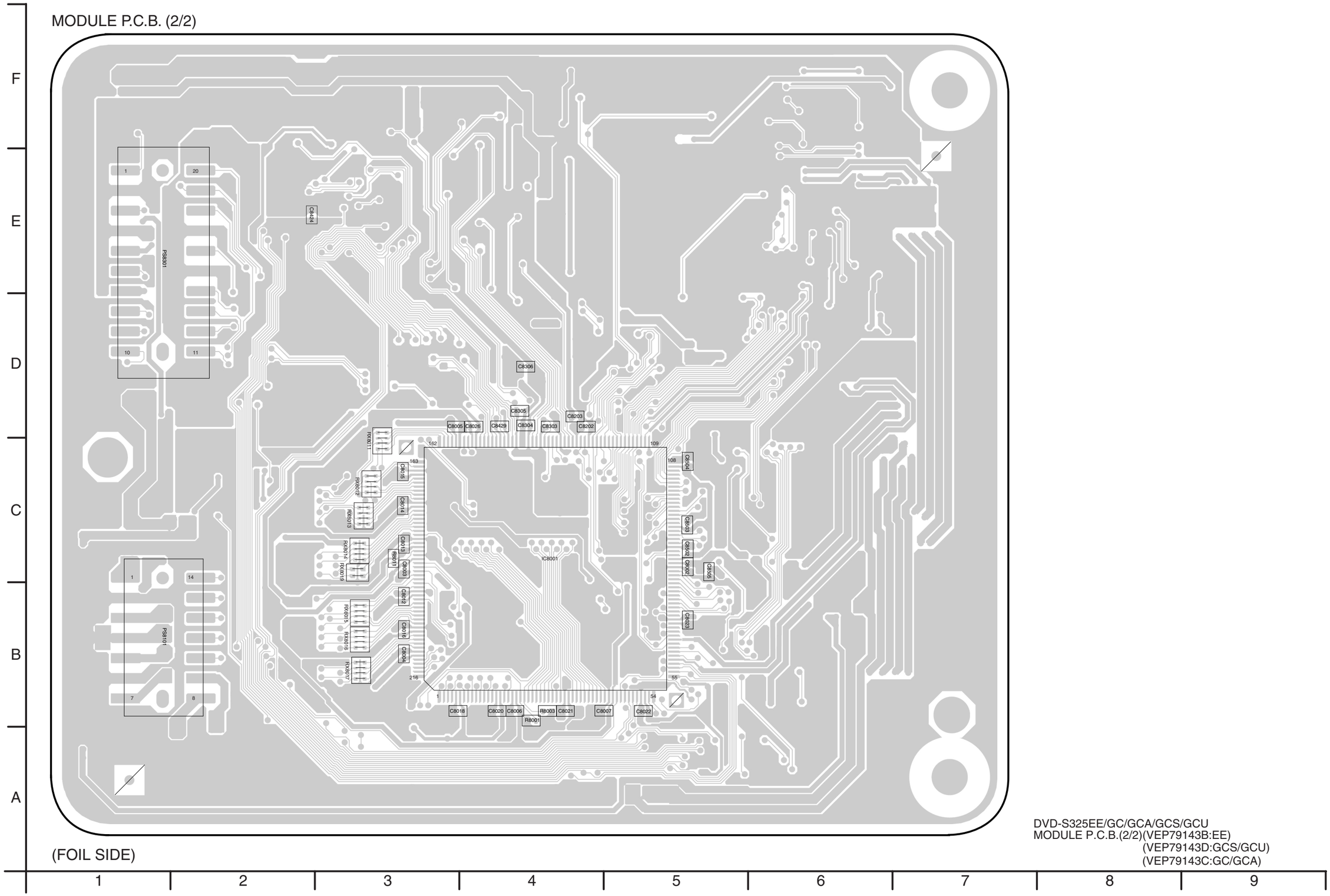

DVD-S325EE/GC/GCA/GCS/GCU
MODULE P.C.B.(2/2)(VEP79143B:EE)
(VEP79143D:GCS/GCU)
(VEP79143C:GC/GCA)

17.7. MODULE P.C.B. ADDRESS INFORMATION

MODULE P.C.B.

Transistor		
Q8251	C-6	C
Q8252	C-6	C
Q8531	F-3	C
Q8532	F-3	C
Q8533	F-3	C
Q8551	E-3	C
Q8552	E-3	C
Q8561	E-4	C
Q8562	E-3	C
Transistor-resistor		
QR8420	E-5	C
Integrated Circuit		
IC8001	C-4	F
IC8051	B-5	C
IC8151	D-5	C
IC8251	C-2	C
IC8601	B-3	C
IC8606	B-3	C
IC8651	B-4	C
Test Point		
CKA1	B-2	C
CKA2	B-2	C
CKA3	B-2	C
CKA4	B-2	C
CKA5	B-2	C
CKA6	B-2	C
CKA7	B-2	C
CKB1	A-3	C
CKB2	A-2	C
CKB3	A-2	C
CKB4	A-2	C
CKB6	A-2	C
CKB8	A-2	C
CKB9	A-3	C
CKC1	F-7	C
CKC2	E-6	C
CKC3	F-7	C
CKC5	E-7	C
CKC6	E-5	C
CKC7	E-7	C
CKC8	D-7	C
CKC9	D-7	C
CKC10	D-7	C
CKC11	D-6	C
CKC12	D-6	C
CKC13	D-6	C
CKC14	D-6	C
CKC15	E-6	C
CKC16	E-6	C
CKC18	E-6	C
CKC19	E-6	C
CKC20	E-6	C
CKD1	F-6	C
CKD2	F-6	C
CKD3	F-6	C
CKD4	F-6	C
CKD6	F-5	C
CKD8	F-5	C
CKD9	F-5	C
CKD10	F-5	C
CKE1	E-1	C
CKE2	E-1	C
CKE3	E-1	C
CKE4	E-1	C
CKE5	E-2	C
CKE6	E-2	C
CKE7	F-2	C
CKE8	F-2	C
CKE10	E-2	C
CKE11	E-2	C
CKE12	F-2	C
CKE13	E-2	C
CKE14	E-2	C
CKE15	F-2	C
CKE16	E-2	C
CKE17	E-2	C
CKE18	E-2	C
CKE19	F-2	C
CKE20	E-2	C
CKE21	F-2	C
CKE22	E-2	C
CKF1	A-2	C
CKF2	A-2	C
CKF3	B-1	C
CKF4	B-1	C
CKF5	B-2	C
CKF6	B-2	C
CKG1	C-7	C
CKG2	C-6	C
CKG3	B-7	C
CKG4	B-7	C
CKG5	B-7	C
CKG7	B-6	C
CKG8	A-6	C
CKG9	B-6	C
CKG10	B-6	C
CKG11	B-6	C

ADDRESS INFORMATION
C.....COMPONENT SIDE
F.....FOIL SIDE

MODULE P.C.B.

Test Point		
CKG12	B-6	C
CKG13	B-6	C
CKG14	B-6	C
CKH1	D-2	C
CKH3	D-2	C
CKH5	D-2	C
CKH6	D-2	C
CKH7	D-2	C
CL8001	C-3	C
CL8002	C-3	C
CL8003	B-6	C
CL8004	B-3	C
CL8005	B-3	C
CL8006	A-3	C
CL8007	A-3	C
CL8008	B-3	C
CL8009	B-3	C
CL8010	B-3	C
CL8011	A-3	C
CL8012	A-4	C
CL8013	A-4	C
CL8014	A-4	C
CL8015	D-2	C
CL8016	D-2	C
CL8017	A-2	C
CL8019	F-3	C
CL8020	D-2	C
CL8021	A-5	C
CL8025	B-3	C
CL8026	B-3	C
CL8032	C-3	C
CL8033	C-3	C
CL8034	C-3	C
CL8035	C-4	C
CL8036	D-4	C
CL8037	D-5	C
CL8038	D-5	C
CL8039	D-5	C
CL8040	D-5	C
CL8041	C-6	C
CL8201	C-2	C
CL8211	D-4	C
CL8212	D-4	C
CL8213	D-4	C
CL8221	D-3	C
CL8222	D-3	C
CL8225	D-4	C
CL8226	D-3	C
CL8231	B-3	C
CL8232	B-3	C
CL8251	D-2	C
CL8252	D-2	C
CL8261	D-2	C
CL8262	D-2	C
CL8421	E-5	C
CL8422	E-5	C
CL8423	E-5	C
CL8424	E-5	C
CL8425	E-5	C
CL8426	E-5	C
CL8427	E-5	C
CL8428	E-5	C
CL8431	E-6	C
CL8432	E-6	C
CL8433	E-6	C
CL8434	E-5	C
CL8435	E-5	C
CL8436	F-5	C
CL8510	E-3	C
CL8511	C-3	C
CL8512	C-3	C
CL8513	E-2	C
CL8521	E-2	C
CL8541	D-3	C
CL8551	E-3	C
CL8561	E-4	C
CL8571	F-4	C
CL8572	B-3	C
CL8651	A-4	C
CL8652	C-4	C
CL8653	A-4	C
CL8654	B-5	C
CL8701	C-3	C
CL8702	C-2	C
Connector		
FP8251	A-2	C
FP8252	E-1	C
FP8531	F-2	C
PS8101	E-1	F
PS8301	B-1	F

18 EXPLODED VIEWS

18.1. CASING PARTS & MECHANISM SECTION EXPLODED VIEW

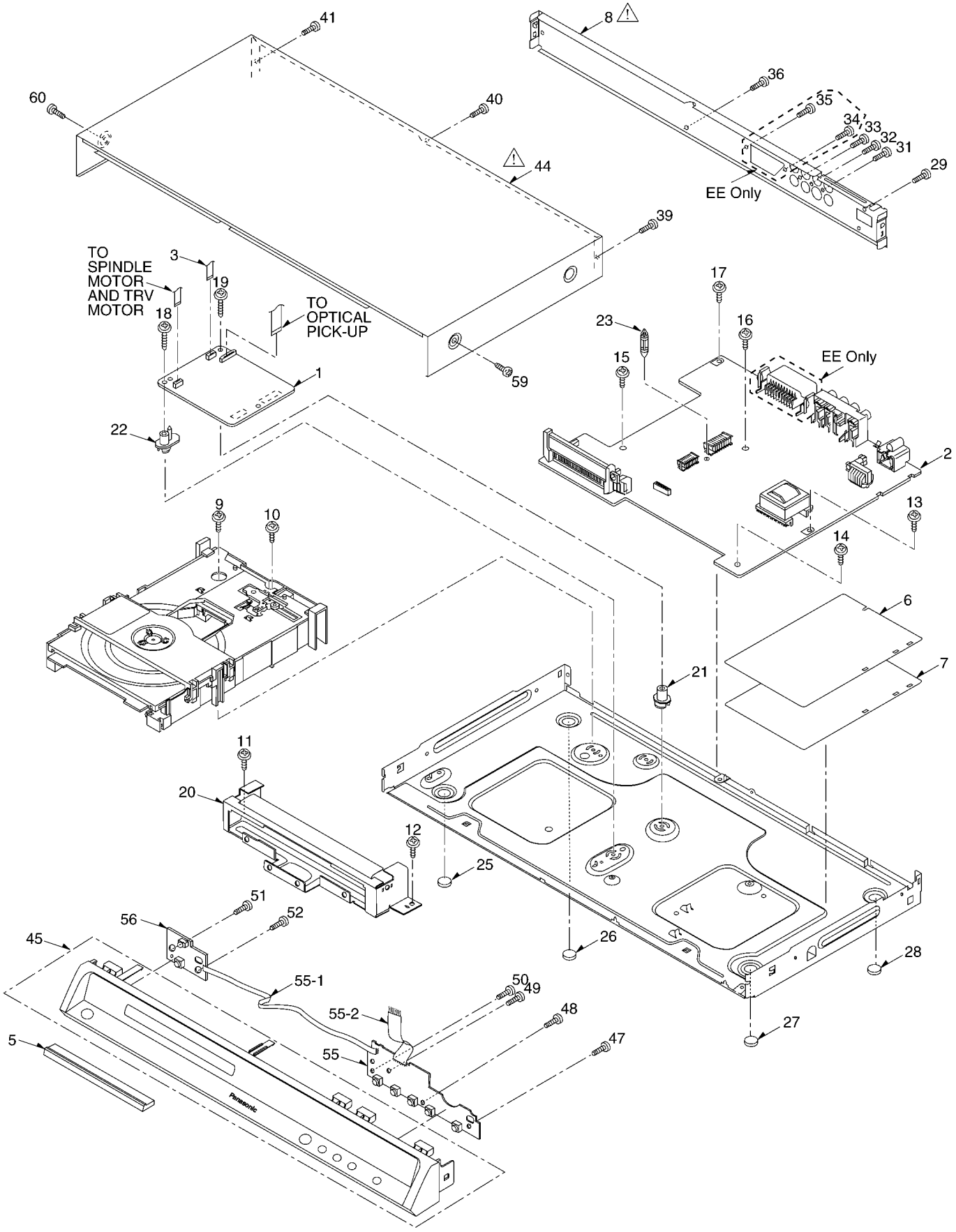

18.2. MECHANISM SECTION EXPLODED VIEW

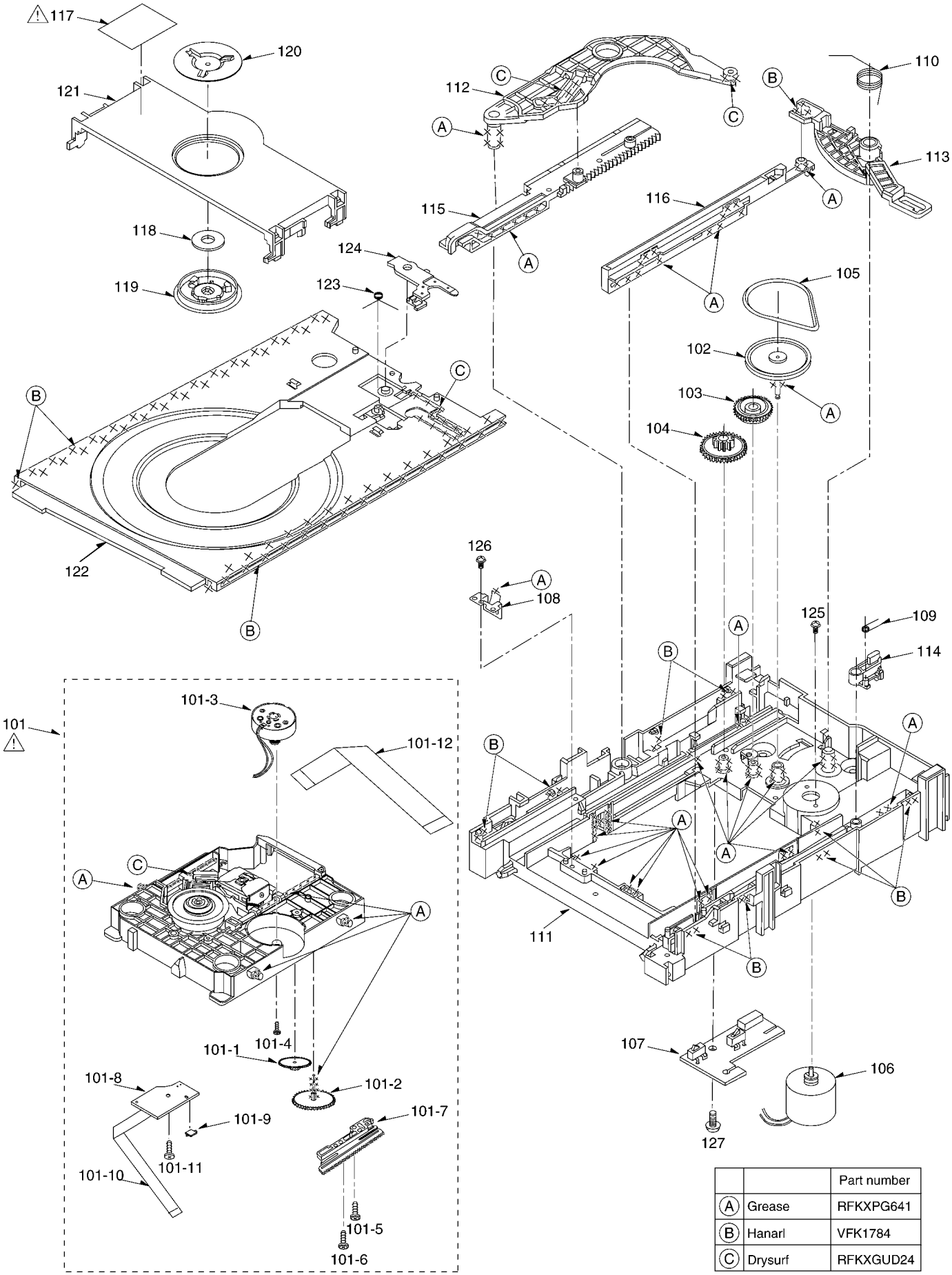

		Part number
A	Grease	RFKXPG641
B	Hanarl	VFK1784
C	Drysurf	RFKXGUD24

18.3. PACKING & ACCESSORIES SECTION EXPLODED VIEW

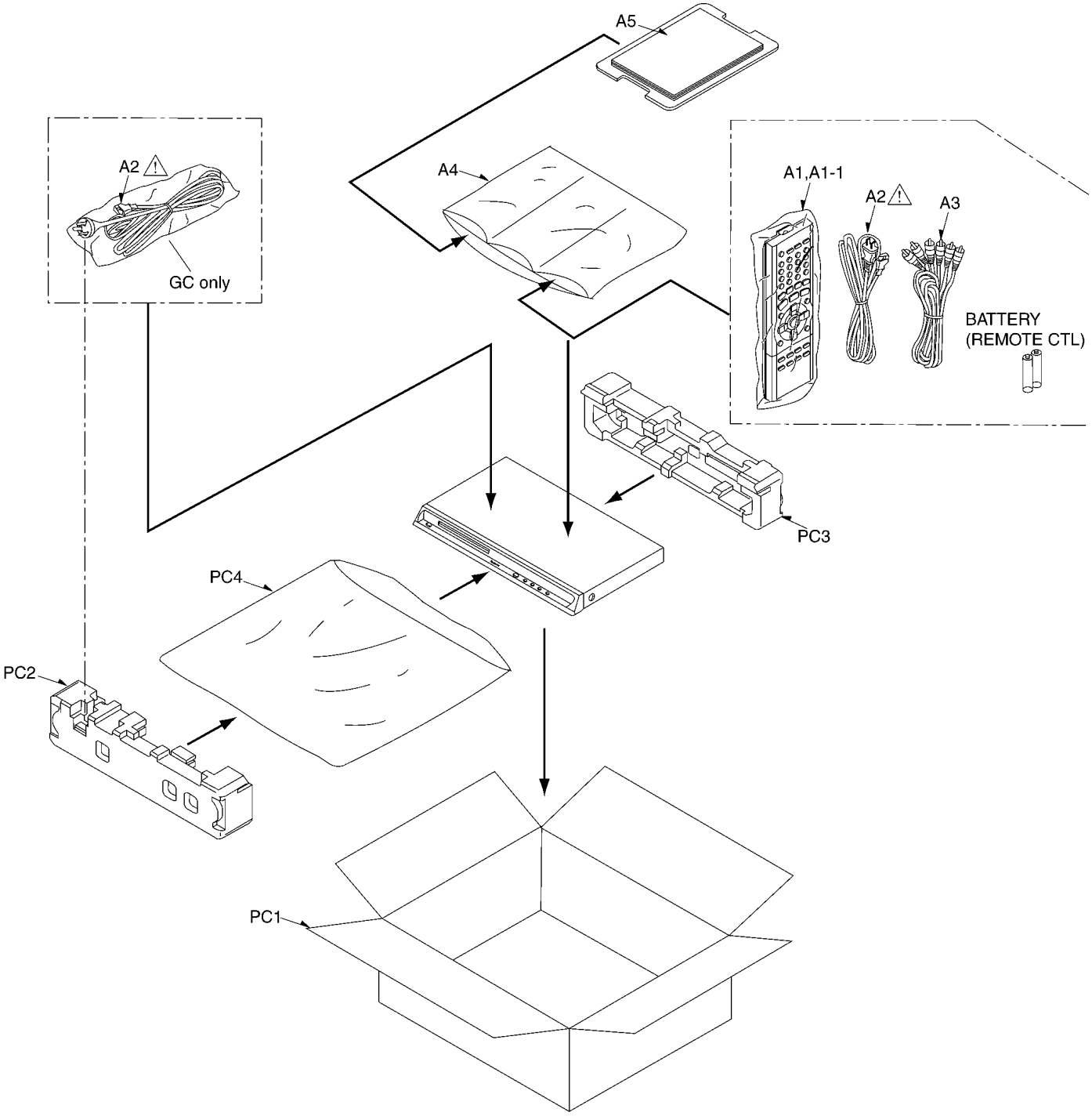

19 REPLACEMENT PARTS LIST

Notes:

*Important safety notice:

Components identified by ⚠ mark have special characteristics important for safety.

Furthermore, special parts which have purposes of fire-retardant (resistors), high-quality sound (capacitors), low-noise (resistors), etc. are used.

When replacing any of components, be sure to use only manufacture's specified parts shown in the parts list.

*Warning: This product uses a laser diode. Refer to caution statements.

*Capacity values are in microfarads (μF) unless specified otherwise, P=Pico-farads (pF), F=Farads (F).

*Resistance values are in ohms, unless specified otherwise, 1K=1,000 (OHM), 1M=1,000k (OHM).

*The marking (RTL) indicates the retention time is limited for this item. After the discontinuation of this assembly in production, it will no longer be available.

*"<IA>", marks in Remarks indicate languages of instruction manuals. [<IA>: English, <IB>: Traditional Chinese, <IC>: Arabic, (ID):Russian/Ukrainian]

*All parts except parts mentioned [SPG] in the Remarks column are supplied by PAVCSG.

*Parts mentioned [SPG] are supplied by SPG [PAVC].

Ref. No.	Part No.	Part Name & Description	Pcs	Remarks
1	VEP79143B	MODULE P.C.B.	1	(RTL) EE
1	VEP79143C	MODULE P.C.B.	1	(RTL) GC/GCA
1	VEP79143D	MODULE P.C.B.	1	(RTL) GCS/GCU
2	VEP76147B	MOTHER P.C.B.	1	(RTL) GC/GCA/GCS/GCU
2	VEP76147D	MOTHER P.C.B.	1	(RTL) EE
3	REZ1710	FFC(7P)	1	
5	RGKC0068	TRAY TOP	1	
6	RGQC0037	INSULATION SHEET	1	
7	RGQC0037	INSULATION SHEET	1	
8	RGRC0022A-R1	REAR PANEL	1	GC ⚠
8	RGRC0022A-S1	REAR PANEL	1	GCA ⚠
8	RGRC0022A-T	REAR PANEL	1	GCS ⚠
8	RGRC0022A-W	REAR PANEL	1	GCU ⚠
8	RGRC0022B-E1	REAR PANEL	1	EE ⚠
9	RHD30101-1J	SCREW	1	
10	RHD30101-1J	SCREW	1	
11	RHD30111-3J	SCREW	1	
12	RHD30111-3J	SCREW	1	
13	RHD30111-3J	SCREW	1	
14	RHD30111-3J	SCREW	1	
15	RHD30111-3J	SCREW	1	
16	RHD30111-3J	SCREW	1	
17	RHD30111-3J	SCREW	1	
18	RHDC0023-J	SCREW	1	
19	RHDC0023-J	SCREW	1	
20	RGQC0038	FRONT ANGLE	1	
21	RMNC0016	PCB SUPPORT(A)	1	
22	RMNC0017	PCB SUPPORT(B)	1	
23	RMNC0019	PCB SUPPORT	1	
25	RKA0130-K	FOOT RUBBER	1	
26	RKA0130-K	FOOT RUBBER	1	
27	RKA0130-K	FOOT RUBBER	1	
28	RKA0130-K	FOOT RUBBER	1	
29	RHDC0027	SCREW	1	
31	RHDC0027	SCREW	1	
32	RHDC0027	SCREW	1	
33	RHDC0027	SCREW	1	
34	RHDC0027	SCREW	1	EE
35	RHDC0027	SCREW	1	EE
36	RHDC0027	SCREW	1	
39	RHDC0027	SCREW	1	
40	RHDC0027	SCREW	1	
41	RHDC0027	SCREW	1	
44	RKMC0012-S	TOP PANEL	1	⚠
45	RFKGVDS325AS	FRONT PANEL ASS'Y	1	
47	RHD26046	SCREW	1	
48	RHD26046	SCREW	1	
49	RHD26046	SCREW	1	
50	RHD26046	SCREW	1	
51	RHD26046	SCREW	1	
52	RHD26046	SCREW	1	
55	VEP70137A	FRONT P.C.B.	1	(RTL)
55-1	REZ1711	CABLE (4P)	1	
55-2	REZ1712	CABLE (7P)	1	
56	VEP70138A	SW P.C.B.	1	(RTL)
59	RHD30007-1SJ	SCREW	1	
60	RHD30007-1SJ	SCREW	1	
101	RXQC0006	TRV UNIT ASS'Y	1	⚠
101-1	RDGC0002	TRV GEAR A	1	
101-2	RDGC0003	TRV GEAR B	1	
101-3	RXQ1397	TRAVERSE MOTOR ASS´Y	1	
101-4	XQN17+C28FJ	SCREW	1	
101-5	RHDC0026	SCREW	1	
101-6	RHDC0026	SCREW	1	
101-7	RMMC0004	OPU DRIVE RACK	1	
101-8	VEP70140A	TRV-SW PCB Unit	1	
101-9	ESE22MH24	SWITCH	1	
101-10	REZC0055	6P FFC	1	
101-11	VHD1224-1	SCREW	1	
101-12	REZC0056	Pickup FFC(22P)	1	
102	RDG0597	PULLEY GEAR	1	
103	RDG0548	RELAY GEAR	1	
104	RDG0549	DRIVE GEAR	1	
105	RDV0070	BELT	1	
106	REM0129	LOADING MOTOR ASS'Y	1	
107	VEP70114A-1	MOTOR P.C.B.	1	(RTL)
108	RMC0387	SUPPORT SPRING	1	
109	RME0351	LOCK LEVER SPRING	1	
110	RMEC0350	CHANGE LEVER SPRING	1	
111	RMK0616-1	MECHA CHASSIS ASS'Y	1	
112	RML0680	DRIVE ARM	1	
113	RML0628	CHANGE LEVER	1	
114	RML0629	LOCK LEVER	1	
115	RMM0283	DRIVE RACK	1	
116	RMM0284	SUB RACK	1	
117	RQLCA0141	LASER CAUTION LABEL	1	⚠
118	JSMC0048	MAGNET	1	
119	RMR1685-X	CLAMPER	1	
120	RMA1890	MAGNET HOLDER	1	
121	RMR1686-K	CLAMP PLATE	1	
122	RGQ0417-K	TRAY	1	
123	RME0353-1	TRAY SLIDER SPRING	1	
124	RML0631	TRAY SLIDER	1	
125	XQN17+C25FJ	SCREW	1	
126	XTB26+6GFJ	SCREW	1	
127	XTN2+6GFJ	SCREW	1	
A1	EUR7631230R	REMOTE CONTROL ASS'Y	1	
A1-1	UR76EC3103A	BATTERY COVER	1	
A2	K2CQ2CA00006	AC CORD	1	⚠

Ref. No.	Part No.	Part Name & Description	Pcs	Remarks
A2	K2CT3CA00004	AC CORD	1	GC ⚠
A3	K2KA6BA00004	AV CORD	1	
A4	RPFC0042	POLYETHYLENE BAG(F.B.)	1	
A5	RQTC0102-B	OPERATING INSTRUCTIONS	1	GC/GCA/GCS/GCU (IA)
A5	RQTC0104-K	OPERATING INSTRUCTIONS	1	GCS/GCU (IB)
A5	RQTC0098-A	OPERATING INSTRUCTIONS	1	GC/GCA (IC)
A5	RQTC0099-R	OPERATING INSTRUCTIONS	1	EE (ID)
C1001	F0CAF104A024	0.1U	1	⚠
C1002	F0CAF104A024	0.1U	1	⚠
C1003	ECKMNA471MBV	470P	1	⚠
C1004	ECKMNA102MEV	1000P	1	⚠
C1011	ECA2WHG100E	450V 10U	1	
C1012	ECA2WHG100E	450V 10U	1	
C1021	F1A3D221A010	2000V 220P	1	
C1031	F1B3A332A008	1000V 0.0033U	1	
C1041	F2A1H1010044	50V 100U	1	
C1051	ECQB1H152JF4	50V 0.0015U	1	
C1061	ECQB1H101KF4	50V 100P	1	
C1071	ECQB1H103JF4	50V 0.01U	1	
C1081	ECQB1H152JF4	50V 0.0015U	1	
C1082	ECQB1H472JF4	50V 0.0047U	1	
C1092	F2A1H100A003	50V 10U	1	
C1101	ECQV1H684JL2	50V 0.68U	1	
C1102	ECQB1H104JF4	50V 0.1U	1	
C1110	F1H1H102A799	50V 1000P	1	
C1111	F2A1A681A539	10V 680U	1	
C1112	F2A1A102A206	10V 1000U	1	
C1115	F1H1C104A111	16V 0.1U	1	
C1116	F2A1A221A501	10V 220U	1	
C1117	F2A0J102A247	6.3V 1000U	1	
C1121	F2A0J681A550	6.3V 680U	1	
C1122	F2A0J222A522	6.3V 2200U	1	
C1141	F2A1E101B150	25V 100U	1	
C1151	F2A1E331B152	25V 330U	1	
C1153	F2A1E331A550	25V 330U	1	
C1154	F2A1C221A236	16V 220U	1	
C1155	ECJ1VB1E104K	25V 0.1U	1	
C1171	F2A1A1010072	10V 100U	1	
C1195	ECJ1VB1A105K	10V 1U	1	
C1196	ECJ1VB1A105K	10V 1U	1	
C3502	F1H1H103A798	50V 0.01U	1	EE
C3503	ECJ1VB1C105K	16V 1U	1	EE
C3504	ECJ1VB1C105K	16V 1U	1	EE
C3505	ECJ1VB1C104K	16V 0.1U	1	
C3506	F1H1H103A798	50V 0.01U	1	
C3507	F2A0J220A245	6.3V 22U	1	
C3508	ECJ1VB0J105K	6.3V 1U	1	
C3509	ECJ1VB0J105K	6.3V 1U	1	
C3510	ECJ1VB0J105K	6.3V 1U	1	
C3511	ECJ1VB0J105K	6.3V 1U	1	
C3512	F2A0J102A247	6.3V 1000U	1	
C3513	F2A0J102A247	6.3V 1000U	1	
C3514	F2A0J102A247	6.3V 1000U	1	
C3515	F2A0J102A247	6.3V 1000U	1	GC/GCA/GCS/GCU
C3516	F2A0J102A247	6.3V 1000U	1	
C3517	ECJ1VB1C104K	16V 0.1U	1	GC/GCA/GCS/GCU
C3518	F2A0J470A245	6.3V 47U	1	
C3804	F1H1H103A798	50V 0.01U	1	EE
C3805	F1H1H103A798	50V 0.01U	1	EE
C3806	F2A0J470A245	6.3V 47U	1	EE
C3811	F2A0J470A245	6.3V 47U	1	EE
C3812	ECJ1VB1C104K	16V 0.1U	1	EE
C3813	F1H1H103A798	50V 0.01U	1	EE
C3814	ECJ1VB1C105K	16V 1U	1	EE
C3815	ECJ1VB1C105K	16V 1U	1	EE
C3816	F2A0J220A245	6.3V 22U	1	EE

Ref. No.	Part No.	Part Name & Description	Pcs	Remarks
C3817	ECJ1VB1C105K	16V 1U	1	EE
C3818	ECJ1VB1C105K	16V 1U	1	EE
C3819	ECJ1VB1C105K	16V 1U	1	EE
C3851	ECJ1VC1H102J	50V 1000P	1	EE
C3852	ECJ1VC1H102J	50V 1000P	1	EE
C3871	F1H1H101A799	50V 100P	1	EE
C3872	F1H1H101A799	50V 100P	1	EE
C4050	F1H1C104A111	16V 0.1U	1	
C4313	F1H1C104A111	16V 0.1U	1	
C4314	F1H1C104A111	16V 0.1U	1	
C4315	F1H1C104A111	16V 0.1U	1	
C4323	F2A1H221A236	50V 220U	1	
C4324	F2A1H221A236	50V 220U	1	
C4336	F1H1H820A799	50V 82P	1	
C4337	F1H1H820A799	50V 82P	1	
C4414	F2A1E470A205	25V 47U	1	
C4415	F2A1E470A205	25V 47U	1	
C4423	ECJ1VC1H102J	50V 1000P	1	
C4427	ECJ1VC1H102J	50V 1000P	1	
C4432	ECJ1VB1C104K	16V 0.1U	1	
C4501	ECJ1VB1H102K	50V 1000P	1	
C4502	ECJ1VB1C104K	16V 0.1U	1	
C4591	F1H1C104A111	16V 0.1U	1	
C4703	ECJ1VB1C104K	16V 0.1U	1	
C4751	F2A1E470A205	25V 47U	1	
C4752	F2A1E470A205	25V 47U	1	
C4781	F2A0J470A599	6.3V 47U	1	
C6001	ECJ1VB1C104K	16V 0.1U	1	
C6002	ECJ1VB1C104K	16V 0.1U	1	
C6003	F2A0J101A245	6.3V 100U	1	
C6005	F2A1H100A601	50V 10U	1	
C6006	F1H1H103A798	50V 0.01U	1	
C6081	F1H1H103A798	50V 0.01U	1	
C6132	ECJ1VB1C104K	16V 0.1U	1	
C8001	F2G0G331A012	4V 330U	1	
C8002	F1G1C104A042	16V 0.1U	1	
C8003	F1G1C104A042	16V 0.1U	1	
C8004	F1G1C104A042	16V 0.1U	1	
C8005	F1G1C104A042	16V 0.1U	1	
C8006	F1G1C104A042	16V 0.1U	1	
C8007	F1G1C104A042	16V 0.1U	1	
C8011	F2G0J101A066	6.3V 100U	1	
C8012	F1G1C104A042	16V 0.1U	1	
C8013	F1G1C104A042	16V 0.1U	1	
C8014	F1G1C104A042	16V 0.1U	1	
C8015	F1G1C104A042	16V 0.1U	1	
C8016	F1G1C104A042	16V 0.1U	1	
C8018	F1G1C104A042	16V 0.1U	1	
C8020	F1G1C104A042	16V 0.1U	1	
C8021	F1G1C104A042	16V 0.1U	1	
C8022	F1G1C104A042	16V 0.1U	1	
C8023	F1G1C104A042	16V 0.1U	1	
C8026	F1G1C104A042	16V 0.1U	1	
C8051	ECJ1VB0J105K	6.3V 1U	1	
C8052	F1G1A104A014	10V 0.1U	1	
C8053	F1G1C104A042	16V 0.1U	1	
C8054	F1G1H221A495	50V 220P	1	
C8055	ECJ1VB0J105K	6.3V 1U	1	
C8056	F1G1E222A062	25V 0.0022U	1	
C8057	ECJ1VB0J105K	6.3V 1U	1	
C8151	ECJ1VB0J225K	6.3V 2.2U	1	
C8152	ECJ1VB1C105K	16V 1U	1	
C8201	F2G0J101A066	6.3V 100U	1	
C8202	F1G1A104A014	10V 0.1U	1	
C8203	F1G1A104A014	10V 0.1U	1	
C8211	F1G1E122A062	25V 0.0012U	1	
C8221	F1G1E102A062	25V 0.001U	1	
C8222	F1G1E821A056	25V 820P	1	
C8225	F1G1E102A062	25V 0.001U	1	
C8226	F1G1E102A062	25V 0.001U	1	
C8231	F1G1A104A014	10V 0.1U	1	
C8232	F1G1A104A014	10V 0.1U	1	
C8251	F2G0J221A065	6.3V 220U	1	

Ref. No.	Part No.	Part Name & Description	Pcs	Remarks
C8252	F1G1C104A042	16V 0.1U	1	
C8255	F2G1C470A076	16V 47U	1	
C8256	F1G1C104A042	16V 0.1U	1	
C8257	F1G1C104A042	16V 0.1U	1	
C8261	F1G1C104A042	16V 0.1U	1	
C8301	F2G0J221A031	6.3V 220U	1	
C8302	F2G0J330A031	6.3V 33U	1	
C8303	F1G1A104A014	10V 0.1U	1	
C8304	F1G1A104A014	10V 0.1U	1	
C8305	F1G1A104A014	10V 0.1U	1	
C8306	F1G1A104A014	10V 0.1U	1	
C8311	F1G1A104A014	10V 0.1U	1	
C8312	ECJ1VB0J105K	6.3V 1U	1	
C8313	ECJ1VB0J105K	6.3V 1U	1	
C8401	F1G1H150A542	50V 15P	1	
C8423	F2G0J330A083	6.3V 33U	1	
C8424	F1G1C104A042	16V 0.1U	1	
C8429	F1G1C104A042	16V 0.1U	1	
C8430	F2G0J331A067	6.3V 330U	1	
C8501	F2G0J101A031	6.3V 100U	1	
C8502	F1G1C104A042	16V 0.1U	1	
C8503	F1G1C104A042	16V 0.1U	1	
C8504	F1G1C104A042	16V 0.1U	1	
C8505	F1G1C104A042	16V 0.1U	1	
C8511	ECJ1VB0J105K	6.3V 1U	1	
C8512	ECJ1VB0J105K	6.3V 1U	1	
C8513	F1G1A104A014	10V 0.1U	1	
C8514	F1G1A104A014	10V 0.1U	1	
C8515	F1G1A104A014	10V 0.1U	1	
C8516	F1G1A104A014	10V 0.1U	1	
C8521	F1G1A104A014	10V 0.1U	1	
C8522	F1G1A104A014	10V 0.1U	1	
C8523	F1G1C104A042	16V 0.1U	1	
C8524	F1G1C104A042	16V 0.1U	1	
C8525	F1G1C562A040	16V 0.0056U	1	
C8526	F1G1C183A004	16V 0.018U	1	
C8527	F1G1C333A004	16V 0.033U	1	
C8528	ECJ1VB0J105K	6.3V 1U	1	
C8529	ECJ1VB0J105K	6.3V 1U	1	
C8530	F1G1C104A042	16V 0.1U	1	
C8531	F1G1H1010005	50V 100P	1	
C8532	F1G1H221A495	50V 220P	1	
C8533	F1G1C104A042	16V 0.1U	1	
C8541	F1G1E472A062	25V 4700P	1	
C8550	F2G0J330A031	6.3V 33U	1	
C8551	F1G1C104A042	16V 0.1U	1	
C8552	F2G0J470A063	6.3V 47U	1	
C8553	F2G0J470A031	6.3V 47U	1	
C8554	ECJ1VB0J105K	6.3V 1U	1	
C8561	F1G1C104A042	16V 0.1U	1	
C8562	F2G0J470A063	6.3V 47U	1	
C8563	F2G0J470A031	6.3V 47U	1	
C8564	ECJ1VB0J105K	6.3V 1U	1	
C8571	F1K1A1060017	10V 10U	1	
C8572	F1G1C104A042	16V 0.1U	1	
C8601	F1G1C104A042	16V 0.1U	1	
C8602	F1G1C153A004	16V 0.015U	1	
C8606	F1G1C104A042	16V 0.1U	1	
C8621	F1G1H180A542	50V 18P	1	
C8622	F1G1H200A451	50V 20U	1	
C8651	F1G1C104A042	16V 0.1U	1	
C8652	F1G1C104A042	16V 0.1U	1	
C8702	F1G1A104A014	10V 0.1U	1	
D1011	B0EDKT000009	DIODE	1	
D1031	B0HADV000001	DIODE	1	
D1041	B0HAGM000006	DIODE	1	
D1051	MAZ40910HF	DIODE	1	
D1061	MA2C16500E	DIODE	1	
D1071	MAZ41000MF	DIODE	1	
D1072	MA2C16500E	DIODE	1	
D1081	MAZ40910HF	DIODE	1	
D1082	MA2C16500E	DIODE	1	

Ref. No.	Part No.	Part Name & Description	Pcs	Remarks
D1111	B0JAMG000013	DIODE	1	
D1121	B0JAMG000013	DIODE	1	
D1122	B0EAKM000117	DIODE	1	
D1141	B0JAMK000023	DIODE	1	
D1151	B0JAMK000023	DIODE	1	
D1152	B0JAMK000023	DIODE	1	
D1153	B0EAKM000122	DIODE	1	
D1171	B0JAME000037	DIODE	1	
D3821	MA3X152A0L	DIODE	1	EE
D4301	MAZ40560HF	DIODE	1	
D6081	MAZ40910LF	ZENER DIODE	1	
D6101	LNJ201LPQJA	LED	1	
D6102	MA2J11100L	DIODE	1	
D6103	MA2J11100L	DIODE	1	
D6104	MA2J11100L	DIODE	1	
D8211	MA2J11100L	DIODE	1	
DP6081	A2BA00000229	FL DISPLAY SCREEN	1	
F1001	K5D162BLA013	FUSE	1	⚠
FP2601	K1MN07B00009	7PIN JACK	1	
FP3501	K1KY14AA0274	14P	1	
FP3502	K1KY20AA0274	20P	1	
FP8251	K1MN06AA0076	JACK	1	
FP8252	K1MN07AA0076	JACK	1	
FP8531	K1MY22AA0027	JACK	1	
IC1021	C0DACZH00033	IC	1	
IC1101	C0DAEMB00003	IC	1	
IC1151	C0DBZHG00047	IC	1	
IC1195	C0DBZGG00062	IC	1	
IC3501	C9ZB00000498	IC	1	
IC3502	C1AB00001935	IC	1	EE
IC3802	C1AB00001731	IC	1	EE
IC3811	C9ZB00000461	IC	1	EE
IC4301	C0ABBB000230	IC	1	
IC6001	C0HBB0000057	IC	1	
IC8001	MN2DS0018DP	IC	1	
IC8051	C3ABPG000150	IC	1	
IC8151	C0DBEHG00006	IC	1	
IC8251	C0GBG0000054	IC	1	
IC8601	C0EBA0000029	IC	1	
IC8606	C0EBE0000456	RESET IC	1	
IC8651	RFKWSS10B16T	IC	1	[SPG] EE/GC/GCA
IC8651	RFKWSS10D16T	IC	1	[SPG] GCS/GCU
IP3802	K5H501Z00005	IC PROTECTOR	1	
IP4751	K5H252Z00003	IC PROTECTOR	1	
IR6131	B3RAD0000115	REMOTE RECEIVING SENSOR	1	
JK3871	K1FB121B0016	JACK	1	EE
JK4401	K2YZ07000005	JACK AUDIO VIDEO OUT	1	EE
JK4401	K2YZ19000001	JACK AUDIO VIDEO OUT	1	GC/GCA/GCS/GCU
K3501	ERJ3GEY0R00V	1/10W 0	1	GC/GCA/GCS/GCU
K3801	ERJ3GEY0R00V	1/10W 0	1	EE
K3802	ERJ3GEY0R00V	1/10W 0	1	EE
K3803	ERJ3GEY0R00V	1/10W 0	1	EE
K8101	ERJ3GEY0R00V	1/10W 0	1	
K8102	ERJ3GEY0R00V	1/10W 0	1	
K8103	ERJ3GEY0R00V	1/10W 0	1	
K8104	ERJ6GEY0R00V	1/10W 0	1	
K8105	ERJ3GEY0R00V	1/10W 0	1	
K8251	ERJ3GEY0R00V	1/10W 0	1	
K8261	ERJ2GE0R00X	1/16W 0	1	
K8321	ERJ2GE0R00X	1/16W 0	1	
K8325	ERJ2GE0R00X	1/16W 0	1	

Ref. No.	Part No.	Part Name & Description	Pcs	Remarks
K8331	ERJ2GE0R00X	1/16W 0	1	
K8335	ERJ2GE0R00X	1/16W 0	1	
K8341	ERJ2GE0R00X	1/16W 0	1	
K8401	ERJ3GEY0R00V	1/10W 0	1	
K8402	ERJ3GEY0R00V	1/10W 0	1	
K8403	ERJ3GEY0R00V	1/10W 0	1	
K8421	ERJ3GEY0R00V	1/10W 0	1	
K8571	ERJ3GEY0R00V	1/10W 0	1	
K8572	ERJ3GEY0R00V	1/10W 0	1	
K8701	ERJ2GE0R00X	1/16W 0	1	
K8705	ERJ2GE0R00X	1/16W 0	1	
K8706	ERJ2GE0R00X	1/16W 0	1	
K8707	ERJ2GE0R00X	1/16W 0	1	
K8708	ERJ2GE0R00X	1/16W 0	1	
K8709	ERJ2GE0R00X	1/16W 0	1	
L1001	ELF15N003A	NOISE FILTER	1	⚠
L1111	G0A100HA0023	COIL 10UH	1	
L1117	G0C100JA0048	COIL 10UH	1	
L1131	G0C330KA0065	COIL 33UH	1	
L1141	G0C330KA0065	COIL 33UH	1	
L1151	G0A220GA0026	COIL 22UH	1	
L3501	G0C220JA0019	COIL 22UH	1	
L3502	G0C220JA0019	COIL 22UH	1	EE
L6001	G0C101JA0019	COIL 100UH	1	
L8201	G1C100K00019	COIL 100UH	1	
L8301	G1C100K00019	COIL 100UH	1	
L8302	G1C100K00019	COIL 100UH	1	
L8501	G1C100K00019	COIL 100UH	1	
L8550	G1C100KA0055	CHIP INDUCTOR 10UH	1	
LB3531	J0JBC0000117	COIL	1	GC/GCA/GCS/GCU
LB3532	J0JBC0000117	COIL	1	GC/GCA/GCS/GCU
LB3533	J0JBC0000117	COIL	1	
LB3534	J0JCC0000186	COIL	1	
LB3535	J0JBC0000117	COIL	1	
LB3536	J0JBC0000117	COIL	1	
LB3537	ERJ3GEY0R00V	1/10W 0	1	
LB3871	J0JBC0000117	COIL	1	EE
LB3872	J0JBC0000117	COIL	1	EE
LB3873	J0JBC0000117	COIL	1	EE
LB3874	J0JBC0000117	COIL	1	EE
LB8001	J0JHC0000097	COIL	1	
LB8011	J0JHC0000097	COIL	1	
LB8255	ERJ3GEY0R00V	1/10W 0	1	
LB8256	ERJ3GEY0R00V	1/10W 0	1	
LB8257	ERJ3GEY0R00V	1/10W 0	1	
LB8258	ERJ3GEY0R00V	1/10W 0	1	
LB8259	ERJ3GEY0R00V	1/10W 0	1	
LB8260	ERJ3GEY0R00V	1/10W 0	1	
LB8261	ERJ2GE0R00X	1/16W 0	1	
LB8262	ERJ2GE0R00X	1/16W 0	1	
LB8264	ERJ3GEY0R00V	1/10W 0	1	
LB8265	ERJ3GEY0R00V	1/10W 0	1	
LB8301	J0JBC0000042	COIL	1	
LB8302	J0JBC0000042	COIL	1	
LB8303	J0JBC0000042	COIL	1	
LB8304	J0JBC0000042	COIL	1	
LB8305	J0JBC0000042	COIL	1	
LB8421	ERJ2GE0R00X	1/16W 0	1	
LB8422	ERJ2GE0R00X	1/16W 0	1	
LB8423	ERJ2GE0R00X	1/16W 0	1	
LB8424	ERJ2GE0R00X	1/16W 0	1	
LB8431	ERJ2GE0R00X	1/16W 0	1	
LB8491	ERJ2GE0R00X	1/16W 0	1	
LB8530	J0JHC0000097	COIL	1	
LB8531	ERJ2GE0R00X	1/16W 0	1	
LB8551	J0JBC0000042	COIL	1	
LB8561	J0JBC0000042	COIL	1	
LB8571	J0JBC0000042	COIL	1	
LB8691	ERJ2GE0R00X	1/16W 0	1	

Ref. No.	Part No.	Part Name & Description	Pcs	Remarks
LB8692	ERJ2GE0R00X	1/16W 0	1	
LB8693	ERJ2GE0R00X	1/16W 0	1	
LB8694	ERJ2GE0R00X	1/16W 0	1	
LB8695	ERJ2GE0R00X	1/16W 0	1	
LB8696	ERJ2GE0R00X	1/16W 0	1	
LB8697	ERJ2GE0R00X	1/16W 0	1	
P1001	K2AA2B000011	AC JACK	1	⚠
PC1	RPGC0491	PACKING CASE	1	EE
PC1	RPGC0492	PACKING CASE	1	GC
PC1	RPGC0493	PACKING CASE	1	GCA
PC1	RPGC0494	PACKING CASE	1	GCS
PC1	RPGC0495	PACKING CASE	1	GCU
PC2	RPNC0110A-1	CUSHION(A)	1	
PC3	RPNC0110B-1	CUSHION(B)	1	
PC4	RPFC0071-B	POLYETHYLENE BAG	1	
PJ6101	K1MP07A00011	JACK	1	
PS8101	K1KY14AA0275	CONNECTOR(14P)	1	
PS8301	K1KY20AA0275	CONNECTOR(20P)	1	
Q1051	B3PBA0000241	TRANSISTOR	1	⚠
Q1115	B1DHDD000029	TRANSISTOR	1	
Q3801	B1ABDF000033	TRANSISTOR	1	EE
Q3821	XN0460100L	TRANSISTOR	1	EE
Q3851	B1ABDF000033	TRANSISTOR	1	EE
Q3852	B1ABDF000033	TRANSISTOR	1	EE
Q4422	B1ABDF000033	TRANSISTOR	1	
Q4423	B1ABDF000033	TRANSISTOR	1	
Q4751	B1ABDF000033	TRANSISTOR	1	
Q6085	B1ABGC000011	TRANSISTOR	1	
Q8251	B1ABDF000026	TRANSISTOR	1	
Q8252	B1ABDF000026	TRANSISTOR	1	
Q8531	B1CFHC000003	TRANSISTOR	1	
Q8532	B1CFHC000003	TRANSISTOR	1	
Q8533	B1ABDF000026	TRANSISTOR	1	
Q8551	2SD1819A0L	TRANSISTOR	1	
Q8552	2SB09700RL	TRANSISTOR	1	
Q8561	2SD1819A0L	TRANSISTOR	1	
Q8562	2SB09700RL	TRANSISTOR	1	
QR1115	B1GBCFNN0043	TRANSISTOR	1	
QR3501	B1GBCFLL0043	TRANSISTOR	1	EE
QR3502	B1GBCFLL0043	TRANSISTOR	1	EE
QR3821	B1GBCFLL0043	TRANSISTOR	1	EE
QR3822	B1GBCFLL0043	TRANSISTOR	1	EE
QR3823	B1GDCFJJ0041	TRANSISTOR	1	EE
QR4302	B1GDCFEJ0008	TRANSISTOR	1	
QR4306	B1GBCFJA0017	TRANSISTOR	1	
QR6001	B1GBCFJJ0041	TRANSISTOR	1	
QR6002	B1GDCFJJ0041	TRANSISTOR	1	
QR6003	B1GDCFJJ0041	TRANSISTOR	1	
QR6004	B1GBCFJJ0041	TRANSISTOR	1	
QR6101	B1GBCFEN0014	TRANSISTOR	1	
QR8420	B1GBCFJJ0040	TRANSISTOR	1	
R1001	ERDS2FJ474T	1/4W 470K	1	
R1002	ERDS2FJ474T	1/4W 470K	1	
R1031	ERG2SJ683P	2W 68K	1	
R1041	ERX12SJ4R7E	1/2W 4.7	1	
R1051	D1AA2002A005	1/4W 20K	1	
R1061	ERDS2TJ182T	1/4W 1.8K	1	
R1062	ERDS2TJ183T	1/4W 18K	1	
R1071	EROS2THF4301	1/4W 4.3K	1	
R1081	D1AA3301A006	1/4W 3.3K	1	
R1083	D1AA2702A005	1/4W 27K	1	
R1084	EROS2THF2701	1/4W 2.7K	1	
R1101	ERDS2TJ181T	1/4W 180	1	
R1102	D1AA4701A006	1/4W 4.7K	1	
R1103	D1AA4701A006	1/4W 4.7K	1	
R1104	ERJ6GEYJ102V	1/10W 1K	1	

Ref. No.	Part No.	Part Name & Description	Pcs	Remarks
R1105	ERJ3GEYJ222V	1/10W 2.2K	1	
R1106	ERJ3GEYJ102V	1/10W 1K	1	
R1107	ERJ3GEYJ103V	1/10W 10K	1	
R1115	ERJ3GEYJ104V	1/10W 100K	1	
R1116	ERJ3GEYJ102V	1/10W 1K	1	
R3501	ERJ3GEYJ223V	1/10W 22K	1	
R3511	ERJ3GEY0R00V	1/10W 0	1	
R3512	ERJ3GEY0R00V	1/10W 0	1	
R3513	ERJ3GEY0R00V	1/10W 0	1	
R3514	ERJ3GEY0R00V	1/10W 0	1	
R3515	ERJ3GEY0R00V	1/10W 0	1	
R3521	ERJ3GEYJ223V	1/10W 22K	1	EE
R3522	ERJ3GEYJ103V	1/10W 10K	1	GC/GCA/GCS/GCU
R3531	ERJ3GEYJ750V	1/10W 75	1	GC/GCA/GCS/GCU
R3532	ERJ3GEYF750V	1/10W 75	1	GC/GCA/GCS/GCU
R3533	ERJ3GEYF750V	1/10W 75	1	
R3534	ERJ3GEYF750V	1/10W 75	1	
R3535	ERJ3GEYJ750V	1/10W 75	1	
R3536	ERJ3GEYJ750V	1/10W 75	1	
R3821	ERJ3GEYJ223V	1/10W 22K	1	EE
R3822	ERJ3GEYJ223V	1/10W 22K	1	EE
R3823	ERJ3GEYJ472V	1/10W 4.7K	1	EE
R3824	ERJ3GEYJ223V	1/10W 22K	1	EE
R3825	ERJ3GEYJ472V	1/10W 4.7K	1	EE
R3826	ERJ3GEYJ183V	1/10W 18K	1	EE
R3827	ERJ3GEYJ223V	1/10W 22K	1	EE
R3828	ERJ3GEYJ471V	1/10W 470	1	EE
R3851	ERJ3GEYJ681V	1/10W 680	1	EE
R3852	ERJ3GEYJ821V	1/10W 820	1	EE
R3853	ERJ3GEYJ821V	1/10W 820	1	EE
R3854	ERJ3GEYJ681V	1/10W 680	1	EE
R3871	ERJ3GEYF750V	1/10W 75	1	EE
R3872	ERJ3GEYF750V	1/10W 75	1	EE
R3873	ERJ3GEYF750V	1/10W 75	1	EE
R3874	ERJ3GEYF750V	1/10W 75	1	EE
R3875	ERJ3GEYJ221V	1/10W 220	1	EE
R3876	ERJ3GEYJ221V	1/10W 220	1	EE
R3877	ERJ3GEYJ750V	1/10W 75	1	EE
R3878	ERJ3GEYJ750V	1/10W 75	1	EE
R4301	ERJ3GEYJ271V	1/10W 270	1	
R4304	ERJ3GEYJ222V	1/10W 2.2K	1	
R4309	ERJ3GEYJ223V	1/10W 22K	1	
R4320	ERJ3GEYJ222V	1/10W 2.2K	1	
R4331	D0HB562ZA002	1/16W 5.6K	1	
R4332	D0HB562ZA002	1/16W 5.6K	1	
R4355	D0HB153ZA002	1/10W 15K	1	
R4356	D0HB153ZA002	1/10W 15K	1	
R4422	ERJ3GEYJ473V	1/10W 47K	1	
R4423	ERJ3GEYJ473V	1/10W 47K	1	
R4428	ERJ3GEYJ681V	1/10W 680	1	
R4429	ERJ3GEYJ681V	1/10W 680	1	
R4451	ERJ3GEYJ821V	1/10W 820	1	
R4452	ERJ3GEYJ821V	1/10W 820	1	
R4459	ERJ3GEYJ221V	1/10W 220	1	
R4460	ERJ3GEYJ221V	1/10W 220	1	
R4751	ERJ3GEYJ102V	1/10W 1K	1	
R4752	ERJ3GEYJ102V	1/10W 1K	1	
R4753	ERJ3GEYJ102V	1/10W 1K	1	
R4754	ERJ3GEYJ221V	1/10W 220	1	
R4755	ERJ3GEYJ750V	1/10W 75	1	
R4756	ERJ3GEYJ103V	1/10W 10K	1	
R4801	ERJ3GEY0R00V	1/10W 0	1	
R4810	ERJ3GEY0R00V	1/10W 0	1	
R6001	ERJ3GEYJ104V	1/10W 100K	1	
R6002	ERJ3GEYJ332V	1/10W 3.3K	1	
R6081	ERQ14AJW271E	1/4W 270	1	
R6085	ERJ3GEYJ822V	1/10W 8.2K	1	
R6086	ERJ3GEYJ104V	1/10W 100K	1	
R6101	ERJ3GEYJ331V	1/10W 330	1	
R6102	ERJ3GEYJ331V	1/10W 330	1	
R6103	ERJ3GEYJ103V	1/10W 10K	1	

Ref. No.	Part No.	Part Name & Description	Pcs	Remarks
R6104	ERJ3GEYJ103V	1/10W 10K	1	
R6105	ERJ3GEY0R00V	1/10W 0	1	
R6106	ERJ3GEY0R00V	1/10W 0	1	
R8001	ERJ2GEJ103X	1/16W 10K	1	
R8002	ERJ2GEJ473X	1/16W 47K	1	
R8003	ERJ2GEJ103X	1/16W 10K	1	
R8004	ERJ2GEJ103X	1/16W 10K	1	
R8009	ERJ2GEJ103X	1/16W 10K	1	
R8011	ERJ2GEJ220X	1/16W 22	1	
R8012	ERJ2GEJ220X	1/16W 22	1	
R8013	ERJ2GEJ220X	1/16W 22	1	
R8014	ERJ2GEJ103X	1/16W 10K	1	
R8015	ERJ2GEJ103X	1/16W 10K	1	
R8016	ERJ2GEJ103X	1/16W 10K	1	
R8017	ERJ2GEJ103X	1/16W 10K	1	
R8018	ERJ2GEJ103X	1/16W 10K	1	
R8041	ERJ2GEJ330X	1/16W 33	1	
R8152	ERJ2RHD621X	1/16W 620	1	
R8153	ERJ2RHD102X	1/16W 1K	1	
R8211	ERJ2GEJ103X	1/16W 10K	1	
R8221	ERJ2GEJ822X	1/16W 8.2K	1	
R8225	ERJ2GEJ822X	1/16W 8.2K	1	
R8230	ERJ2GEJ222X	1/16W 360	1	
R8231	ERJ2GEJ752X	1/16W 7.5K	1	
R8232	ERJ2GEJ752X	1/16W 7.5K	1	
R8251	ERJ2GEJ103X	1/16W 10K	1	
R8252	ERJ2GEJ152X	1/16W 1.5K	1	
R8253	ERJ2GEJ103X	1/16W 10K	1	
R8254	ERJ2GEJ104X	1/16W 100K	1	
R8261	ERJ2GEJ203X	1/16W 20K	1	
R8262	ERJ2GEJ153X	1/16W 15K	1	
R8263	ERJ2GEJ203X	1/16W 20K	1	
R8264	ERJ2GEJ153X	1/16W 15K	1	
R8311	ERJ2RHD242X	1/16W 2.4K	1	
R8312	ERJ2RHD102X	1/16W 1K	1	
R8313	ERJ2RHD273X	1/16W 27K	1	
R8314	ERJ2RHD272X	1/16W 2.7K	1	
R8321	ERJ3RBD201V	1/16W 200	1	
R8322	ERJ3GEY0R00V	1/10W 0	1	
R8325	ERJ3RBD201V	1/16W 200	1	
R8326	ERJ3GEY0R00V	1/10W 0	1	
R8331	ERJ3RBD201V	1/16W 200	1	
R8332	ERJ3GEY0R00V	1/10W 0	1	
R8335	ERJ3RBD201V	1/16W 200	1	
R8341	ERJ3RBD201V	1/16W 200	1	
R8401	ERJ2GEJ101X	1/16W 100	1	
R8403	ERJ2GEJ101X	1/16W 100	1	
R8420	ERJ2GEJ222X	1/16W 360	1	
R8421	ERJ2GE0R00X	1/16W 0	1	
R8423	ERJ2GE0R00X	1/16W 0	1	
R8424	ERJ2GEJ103X	1/16W 10K	1	
R8425	ERJ2GEJ103X	1/16W 10K	1	
R8430	ERJ3GEYJ102V	1/10W 1K	1	
R8531	ERJ2GEJ152X	1/16W 1.5K	1	
R8532	ERJ2GEJ222X	1/16W 360	1	
R8533	ERJ2GE0R00X	1/16W 0	1	
R8534	ERJ2GEJ103X	1/16W 10K	1	
R8535	ERJ2GEJ103X	1/16W 10K	1	
R8537	ERJ3GEY0R00V	1/10W 0	1	
R8538	ERJ3GEY0R00V	1/10W 0	1	
R8541	ERJ2GEJ153X	1/16W 15K	1	
R8551	ERJ2GE0R00X	1/16W 0	1	
R8552	ERJ2GEJ102X	1/16W 1K	1	
R8553	ERJ2GEJ102X	1/16W 1K	1	
R8554	ERJ2GEJ100X	1/16W 10	1	
R8555	ERJ2GEJ2R2X	1/16W 2.2	1	
R8556	ERJ3GEYJ560V	1/10W 56	1	
R8557	ERJ3GEYJ510V	1/10W 51	1	
R8558	ERJ2GEJ473X	1/16W 47K	1	
R8559	ERJ2GEJ153X	1/16W 15K	1	
R8561	ERJ2GE0R00X	1/16W 0	1	
R8562	ERJ2GEJ102X	1/16W 1K	1	
R8563	ERJ2GEJ102X	1/16W 1K	1	

Ref. No.	Part No.	Part Name & Description	Pcs	Remarks
R8564	ERJ2GEJ220X	1/16W 22	1	
R8565	ERJ2GEJ2R2X	1/16W 2.2	1	
R8566	ERJ3GEYJ560V	1/10W 56	1	
R8567	ERJ3GEYJ510V	1/10W 51	1	
R8568	ERJ2GEJ473X	1/16W 47K	1	
R8601	ERJ2GEJ104X	1/16W 100K	1	
R8621	ERJ2GEJ105X	1/16W 1M	1	
R8622	ERJ2RHD561X	1/16W 560	1	
R8636	ERJ2GEJ104X	1/16W 100K	1	
R8701	ERJ2GEJ822X	1/16W 8.2K	1	
R8702	ERJ2GEJ103X	1/16W 10K	1	EE
R8703	ERJ2GEJ103X	1/16W 10K	1	GC/GCA/GCS/GCU
R8704	ERJ2GEJ103X	1/16W 10K	1	
R8706	ERJ2GEJ103X	1/16W 10K	1	
R8708	ERJ2GEJ103X	1/16W 10K	1	GC/GCA
R8709	ERJ2GEJ103X	1/16W 10K	1	GCS/GCU/EE
R8710	ERJ2GEJ103X	1/16W 10K	1	
R8712	ERJ2GEJ222X	1/16W 360	1	
RX8011	D1H88204A024	RESISTOR-RESISTOR	1	
RX8012	D1H88204A024	RESISTOR-RESISTOR	1	
RX8013	D1H88204A024	RESISTOR-RESISTOR	1	
RX8014	D1H88204A024	RESISTOR-RESISTOR	1	
RX8015	D1H88204A024	RESISTOR-RESISTOR	1	
RX8016	D1H88204A024	RESISTOR-RESISTOR	1	
RX8017	D1H88204A024	RESISTOR-RESISTOR	1	
RX8018	D1H422020001	RESISTOR-RESISTOR	1	
RX8019	D1H422020001	RESISTOR-RESISTOR	1	
RX8020	D1H422020001	RESISTOR-RESISTOR	1	
RX8031	D1H447220001	RESISTOR-RESISTOR	1	
RX8032	D1H447220001	RESISTOR-RESISTOR	1	
RX8531	D1H456020001	RESISTOR-RESISTOR	1	
RX8532	D1H85604A024	RESISTOR-RESISTOR	1	
RX8533	D1H456020001	RESISTOR-RESISTOR	1	
S2601	K0L1BA000078	SWITCH	1	
S2602	K0L1BA000078	SWITCH	1	
S6151	EVQ11G05R	SWITCH	1	
S6152	EVQ11G05R	SWITCH	1	
S6161	EVQ11G05R	SWITCH	1	
S6162	EVQ11G05R	SWITCH	1	
S6171	EVQ11G05R	SWITCH	1	
S6172	EVQ11G05R	SWITCH	1	
T1021	G4D2A0000265	TRANSFORMER	1	⚠
VA1002	ERZVA5Z471	TRANSIENT/SURGE ABSORBER	1	⚠
W300	ERJ3GEY0R00V	1/10W 0	1	
W301	ERJ3GEY0R00V	1/10W 0	1	
W302	ERJ3GEY0R00V	1/10W 0	1	
W303	ERJ3GEY0R00V	1/10W 0	1	
W304	ERJ3GEY0R00V	1/10W 0	1	
W306	ERJ3GEY0R00V	1/10W 0	1	
W307	ERJ3GEY0R00V	1/10W 0	1	
W308	ERJ3GEY0R00V	1/10W 0	1	
W309	ERJ3GEY0R00V	1/10W 0	1	
W310	ERJ3GEY0R00V	1/10W 0	1	
W311	ERJ3GEY0R00V	1/10W 0	1	
W313	ERJ3GEY0R00V	1/10W 0	1	
W314	ERJ3GEY0R00V	1/10W 0	1	
W315	ERJ3GEY0R00V	1/10W 0	1	
W316	ERJ3GEY0R00V	1/10W 0	1	
W317	ERJ3GEY0R00V	1/10W 0	1	
W320	ERJ3GEY0R00V	1/10W 0	1	
W321	ERJ3GEY0R00V	1/10W 0	1	
W346	ERJ3GEY0R00V	1/10W 0	1	
W355	ERJ3GEY0R00V	1/10W 0	1	
W356	ERJ3GEY0R00V	1/10W 0	1	
W360	ERJ3GEY0R00V	1/10W 0	1	
W361	ERJ3GEY0R00V	1/10W 0	1	

Ref. No.	Part No.	Part Name & Description	Pcs	Remarks
W362	ERJ3GEY0R00V	1/10W 0	1	
W363	ERJ3GEY0R00V	1/10W 0	1	
X8621	H0J270500080	CRYSTAL OSCILLATOR	1	
ZA1001	EYF52BCY	FUSE HOLDER	1	
ZA1002	EYF52BCY	FUSE HOLDER	1	
ZA1111	RMCC0001-1	EARTH SPRING	1	
ZA1112	K4CZ01000027	EARTH SPRING	1	
ZA4751	K4CZ01000027	EARTH SPRING	1	
ZA4754	RMCC0027	TERMINAL	1	