ORDER NO.MD0605185C3

Service Manual

DVD Home Theater Sound System

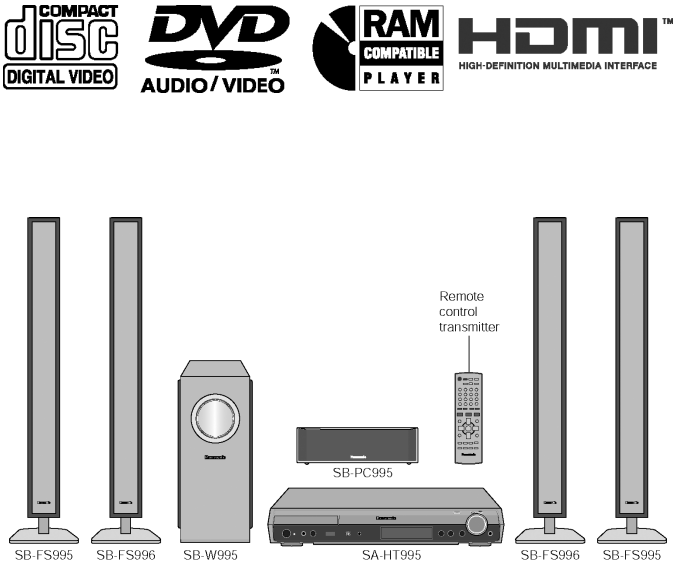

SA-HT995GC
SA-HT995GCS
SA-HT995GS

Colour

(S).....Silver Type

Specifications

IGeneral

Power Source:	AC 110-127V/ 220-240V, 50/ 60Hz
Power consumption:	120 W
Dimensions (W×H×D):	430×60×354 mm
Mass:	3.35kg

IAmplifier section

RMS Output Power: Dolby Digital Mode

ITotal RMS Dolby Digital mode Power:	1000 W

At 1kHz and total harmonic of 10%

IFront:	125 W/ Channel (3Ω)
ICenter:	250 W/ Channel (6Ω)
ISurround:	125 W/ Channel (3Ω)

At 100Hz and total harmonic of 10%

ISubwoofer:	250 W/ Channel (6Ω)
PMPO Output Power::	7500 W

DIN Output Power: Dolby Digital Mode:

ITotal DIN Dolby Digital mode Power:	470 W

At 1kHz and total harmonic of 1%

IFront:	80 W/ Channel (3Ω)
ICenter:	75 W/ Channel (6Ω)
ISurround:	80 W/ Channel (3Ω)

At 100Hz and total harmonic of 1%

ISubwoofer:	75 W/ Channel (6Ω)

IFM tuner section

Preset Memory:	FM 15 stations AM/MW 15 stations
Frequency Range:	87.50-108.00MHz (50kHz in step)
Sensitivity:	2.5μV (IHF)
S/N 26dB	2.2μV
Antenna Terminals:	75Ω (unbalanced)

IAM tuner section

Frequency Range:	522-1629kHz (9kHz in step) 520-1630kHz (10kHz in step)
AM Sensitivity S/N 20dB at 999kHz:	560μV/m

IPhone jack:

Terminal:	Stereo 3.5 mm jack

IMic jack:

Panasonic®

© 2006 Panasonic AVC Networks Singapore Pte. Ltd. All rights reserved. Unauthorized copying and distribution is a violation of law.

Sensitivity: 0.7mV (1.2kΩ)

Terminal: Stereo 6.3 mm jack (1 system)

IFront M. Port:

Sensitivity: 100mV (15kΩ)

Terminal: Stereo 3.5 mm jack

IDisc section

Discs played (8 cm or 12 cm):

(1) DVD [DVD-Video, DVD-Audio, DivX(*1,2)]

(2) DVD-RAM [DVD-VR, MP3(*2,6), JPEG(*2,3), MPEG4(*2,4), DivX(*1,2)]

(3) DVD-R [DVD-Video, DVD-VR, MP3(*2,6), JPEG(*2,3), MPEG4(*2,4), DivX(*1,2)]

(4) DVD-R DL [DVD-Video, DVD-VR]

(5) DVD-RW [DVD-Video, DVD-VR, MP3(*2,6), JPEG(*2,3), MPEG4(*2,4), DivX(*1,2)]

(6) +R/+RW [Video]

(7) +R DL [Video]

(8) CD, CD-R/RW [CD-DA, Video CD, SVCD(*5), MP3(*2,6), WMA(*2,7), JPEG(*2,3), MPEG4(*2,4), DivX (*1,2), HighMAT Level 2 (Audio and Image)]

*1 Plays all versions of DivX® video (including DivX®6) with standard playback of DivX® media files. Certified to the DivX Home Theater Profile.

IGMC (Global Motion Compensation) is not supported.

*2 The total combined maximum number of recognizable audio, picture and video contents and groups: 4000 audio, picture and video contents and 400 groups.

*3 Exif Ver 2.1 JPEG Baseline files

IPicture resolution: between 160 x 120 and 6144 x 4096 pixels (Sub sampling is 4:0:0, 4:2:0, 4:2:2, 4:4:4). Extremely long and narrow pictures may not be displayed.

*4 MPEG4 data recorded with Panasonic SD multi cameras or DVD video recorders.

IConforming to SD VIDEO specifications (ASF standard)/ MPEG4 (Simple Profile) video system/G.726 audio system.

*5 Conforming to IEC62107

*6 MPEG-1 Layer 3, MPEG-2 Layer 3

*7 Windows Media Audio Ver.9.0 L3

INot compatible with Multiple Bit Rate (MBR)

Pick up:

Wavelength:

ICD: 785nm

IDVD: 662nm

Laser power:

ICD: CLASS 1M

IDVD: CLASS 1

Audio output (DISC):

Number of channels: 5.1 ch (FL, FR, C, SL, SR, SW)

Audio performance:

Frequency response:

DVD (linear audio): 4 Hz-22 kHz (48 kHz sampling)
4 Hz-44 kHz (96 kHz sampling)

DVD-Audio: 4 Hz-88 kHz (192 kHz sampling)

CD-Audio: 4 Hz-20 kHz

S/N ratio:

CD-Audio: 105 dB

Dynamic range:

DVD (linear audio): 95 dB

CD-Audio: 95 dB

Total harmonic distortion:

CD-Audio: 0.005 %

IVideo section

Video system:

Signal system: PAL 625/50, PAL 525/60, NTSC

Composite video output:

Output level: 1 Vp-p (75 Ω)

Terminal: Pin jack (1 system)

S-video output:

Y output level: 1 Vp-p (75 Ω)

C output level: PAL; 0.3Vp-p (75Ω)
NTSC; 0.286 Vp-p (75 Ω)

Terminal S terminal (1 system)

Component video output (NTSC: 480p/480i, PAL: 576p/576i):

Y output level: 1 Vp-p (75 Ω)

P_B output level: 0.7 Vp-p (75 Ω)

P_R output level: 0.7 Vp-p (75 Ω)

Terminal: Pin jack (Y: green, P_B: blue, P_R: red) (1 system)

HDMI AV output: 19 pin type A connector, HDMI Ver.1.2a (EDID Ver.1.3)

Power consumption in standby mode:

approx 0.5W

Note:

1. Specifications are subject to change without notice.
   Mass and dimensions are approximate.
2. Total harmonic distortion is measured by the digital spectrum analyzer.

Solder:

This model uses lead free solder (PbF).

Mechanism:

This model uses DL2SU (Single tray) mechanism.

System	SC-HT995GC	SC-HT995GCS	SC-HT995GS
Main unit	SA-HT995GC	SA-HT995GCS	SA-HT995GS
Speaker system	SB-HT995GC	SB-HT995GC	SB-HT995GC
Active subwoofer	SB-W995GC	SB-W995GC	SB-W995GC*4

Speaker system	SB-HT995GC
Front speakers	SB-FS995GC*1
Center speaker	SB-PC995GC*2
Surround speakers	SB-FS996GC*3

Refer to the original service manual for *1, *2, *3, *4.

MPEG Layer-3 audio decoding technology licensed from Fraunhofer IIS and Thomson multimedia.

Windows Media, and the Windows logo are trademarks, or registered trademarks of Microsoft Corporation in the United States and/or other countries.

WMA is a compression format developed by Microsoft Corporation. It achieves the same sound quality as MP3 with a file size that is smaller than that of MP3.

Designed for Windows Media™

HIGH M·A·T AUDIO·IMAGE

HighMAT™ and the HighMAT logo are either trademarks or registered trademarks of Microsoft Corporation in the United States and/or other countries.

HDCD®, HDCD®, High Definition Compatible Digital® and Pacific Microsonics™ are either registered trademarks or trademarks of Pacific Microsonics, Inc. in the United States and/or other countries.

HDCD system manufactured under license from Pacific Microsonics, Inc. This product is covered by one or more of the following: In the USA: 5,479,168, 5,638,074, 5,640,161, 5,808,574, 5,838,274, 5,854,600, 5,864,311, 5,872,531, and in Australia: 669114, with other patents pending.

This product is licensed under the MPEG-4 Visual patent portfolio license for the personal and non-commercial use of a consumer for (i) encoding video in compliance with the MPEG-4 Visual Standard ("MPEG-4 Video") and/or (ii) decoding MPEG-4 Video that was encoded by a consumer engaged in a personal and non-commercial activity and/or was obtained from a video provider licensed by MPEG LA to provide MPEG-4 Video. No license is granted or shall be implied for any other use. Additional information including that relating to promotional, internal and commercial uses and licensing may be obtained from MPEG LA, LLC. See http://www.mpegla.com.

Official DivX® Certified product.
Plays all versions of DivX® video (including DivX®6) with standard playback of DivX® media files.
DivX, DivX Certified, and associated logos are trademarks of DivX, Inc. and are used under license.

DIVX® VIDEO

HDMI, the HDMI logo and High-Definition Multimedia Interface are trademarks or registered trademarks of HDMI Licensing LLC.

HDAVI Control™ is a trademark of Matsushita Electric Industrial Co., Ltd.

■ Built-in decoders

You can play discs with these symbols.

DOLBY DIGITAL DIGITAL dts SURROUND

⚠ WARNING

This service information is designed for experienced repair technicians only and is not designed for use by the general public.
It does not contain warnings or cautions to advise non-technical individuals of potential dangers in attempting to service a product.
Products powered by electricity should be serviced or repaired only by experienced professional technicians. Any attempt to service or repair the product or products dealt with in this service information by anyone else could result in serious injury or death.

CONTENTS

	Page
1 Safety Precautions	**5**
1.1. GENERAL GUIDELINES	5
1.2. Before Repair and Adjustment	5
1.3. Protection Circuitry	5
1.4. Caution for AC Cord (For GS only)	6
2 Prevention of Electro Static Discharge (ESD) to Electrostatically Sensitive (ES) Devices	**7**
3 Precaution of Laser Diode	**8**

4 About Lead Free Solder (PbF) ---- 9
4.1. Service caution based on legal restrictions ---- 9
5 Handling Precautions for Traverse Unit ---- 10
5.1. Cautions to Be Taken in Handling the Optical Pickup Unit ---- 10
5.2. Grounding for electrostatic breakdown prevention ---- 10
6 Accessories ---- 12
7 Operation Procedures ---- 13
7.1. Remote Control Key Buttons Operations ---- 13
7.2. Main Unit Key Buttons Operations (SA-HT995) ---- 14
7.3. Use of HDAVI Control ---- 15
7.4. Using of Music Port ---- 16
7.5. Disc Information ---- 17
7.6. About DivX VOD Content ---- 19
8 New Features ---- 20
8.1. About HDMI ---- 20
9 Self-Diagnosis and special mode setting ---- 22
9.1. Service Mode Summary Table ---- 22
9.2. Service Mode Table ---- 22
9.3. DVD Self Diagnostic Function-Error Code ---- 27
9.4. Sales Demonstration Lock Function ---- 29
9.5. Service Precautions ---- 30
10 Assembling and Disassembling ---- 32
10.1. Disassembly Flow Chart ---- 33
10.2. Main Components and P.C.B. Locations ---- 34
10.3. Disassembly of Top Cabinet ---- 35
10.4. Disassembly of the DVD Lid (When taking out disc manually) ---- 35
10.5. Disassembly of Front Panel Assembly ---- 36
10.6. Disassembly of Music Port P.C.B, Mic P.C.B., FL P.C.B. & Top Button P.C.B. ---- 36
10.7. Disassembly of DVD Mechanism Unit ---- 37
10.8. Disassembly of Relay P.C.B. ---- 37
10.9. Disassembly of Rear panel ---- 37
10.10. Disassembly of HDMI Module P.C.B. ---- 38
10.11. Disassembly of Main P.C.B., AC-Inlet P.C.B., Tuner Extent P.C.B. & Voltage Selector P.C.B. ---- 38
10.12. Disassembly of Digital Amp IC (IC5000/IC5200/IC5300) ---- 38
10.13. Disassembly of Digital Amp IC (IC5400) ---- 39
10.14. Disassembly of Regulator IC ---- 39
10.15. Disassembly of Switch Regulator IC (IC5701) ---- 39
11 Service Position ---- 40
11.1. Servicing position of the HDMI Module P.C.B. ---- 40
11.2. Servicing position of the Main P.C.B. ---- 40
12 Assembly and disassembly of Mechanism Unit ---- 41
12.1. Disassembly Procedure ---- 41
13 Measurements and Adjustments ---- 47
13.1. Service Tools and Equipment ---- 47
13.2. Important points in adjustment ---- 47
13.3. Storing and handling of test discs ---- 47
13.4. Optical adjustment ---- 48
14 Abbreviations ---- 49
15 Voltage and Waveform Chart ---- 51
15.1. HDMI Module P.C.B. ---- 51
15.2. Main P.C.B. ---- 53
15.3. FL P.C.B., Mic & Tray Loading P.B.C. ---- 54
15.4. Waveform Chart ---- 55
16 Illustration of IC's, Transistors and Diodes ---- 57
17 Wiring Connection Diagram ---- 59
18 Block Diagram ---- 61
19 Schematic Diagram Notes ---- 69
20 Schematic Diagram ---- 71
20.1. (A) Optical Pickup Unit & HDMI Module Circuit ---- 71
20.2. (B) Main Circuit ---- 78
20.3. (C) Power, AC-inlet & Voltage Selector Circuit ---- 83
20.4. (D) FL, Top Button, Tuner Extent, Tray Loading, Mic, Music Port & Relay Circuit ---- 87
21 Printed Circuit Board ---- 89
21.1. (A) HDMI Module P.C.B. ---- 89
21.2. (B) Main/Power P.C.B. ---- 90
21.3. (C) Tuner extent, AC-inlet, FL, Music port & Top button P.C.B. ---- 91
21.4. (D) Mic, Tray Loading, Voltage Selector & Relay P.C.B. ---- 92
22 Basic Troubleshooting Guide ---- 93
22.1. Basic Troubleshooting Guide for Traverse Unit (HDMI Module P.C.B) ---- 93
22.2. Basic Troubleshooting Guide for HDMI AV output ---- 94
23 Overall Block (HT995) ---- 95
23.1. HT995 DVD Unit Block ---- 96
23.2. HT995 Block (Analog Signal : DVD 5.1ch Play Back Mode) ---- 97
23.3. HT995 Block (Analog Signal : 2ch Analog Input Mode) ---- 98
23.4. HT995 Power Supply Block ---- 99
23.5. HT995 Power Block (SMPS) ---- 100
24 Terminal Function of ICs ---- 101
24.1. IC2018 (C2CBYY000196): Micro-processor IC ---- 101
25 Exploded Views ---- 102
25.1. Cabinet Parts Location ---- 102
25.2. Packaging ---- 105
26 Replacement Parts List ---- 106
26.1. Component Parts List ---- 107

1 Safety Precautions

1.1. GENERAL GUIDELINES

1. When servicing, observe the original lead dress. If a short circuit is found, replace all parts which have been overheated or damaged by the short circuit.
2. After servicing, see to it that all the protective devices such as insulation barriers, insulation papers shields are properly installed.
3. After servicing, carry out the following leakage current checks to prevent the customer from being exposed to shock hazards.

1.1.1. LEAKAGE CURRENT COLD CHECK

1. Unplug the AC cord and connect a jumper between the two prongs on the plug.
2. Measure the resistance value, with an ohmmeter, between the jumpered AC plug and each exposed metallic cabinet part on the equipment such as screwheads, connectors, control shafts, etc. When the exposed metallic part has a return path to the chassis, the reading should be between 1MΩ and 5.2MΩ.
   When the exposed metal does not have a return path to the chassis, the reading must be ∞.

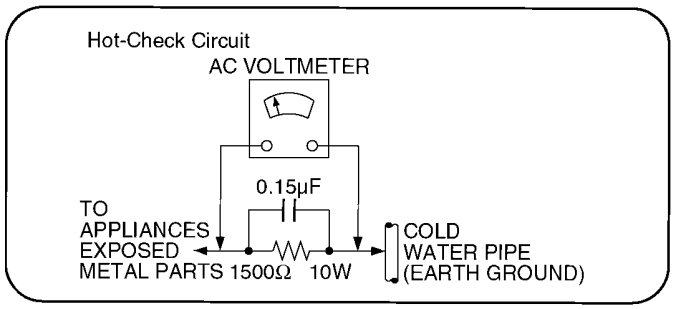

Figure 1

1.1.2. LEAKAGE CURRENT HOT CHECK (See Figure 1.)

1. Plug the AC cord directly into the AC outlet. Do not use an isolation transformer for this check.
2. Connect a 1.5kΩ, 10 watts resistor, in parallel with a 0.15μF capacitors, between each exposed metallic part on the set and a good earth ground such as a water pipe, as shown in Figure 1.
3. Use an AC voltmeter, with 1000 ohms/volt or more sensitivity, to measure the potential across the resistor.
4. Check each exposed metallic part, and measure the voltage at each point.
5. Reverse the AC plug in the AC outlet and repeat each of the above measurements.
6. The potential at any point should not exceed 0.75 volts RMS. A leakage current tester (Simpson Model 229 or equivalent) may be used to make the hot checks, leakage current must not exceed 1/2 milliamp. In case a measurement is outside of the limits specified, there is a possibility of a shock hazard, and the equipment should be repaired and rechecked before it is returned to the customer.

1.2. Before Repair and Adjustment

Disconnect AC power, discharge Power Supply Capacitors C5701, C5706, C5714, C5736 & C5737 through a 10 Ω, 10 W resistor to ground.

DO NOT SHORT-CIRCUIT DIRECTLY (with a screwdriver blade, for instance), as this may destroy solid state devices.

After repairs are completed, restore power gradually using a variac, to avoid overcurrent.

Current consumption at AC 110-127V / 220-240V, 50/60 Hz in NO SIGNAL mode (at volume minimum) should be ~ 600 mA.

Note: This model is equipped with voltage selector for selection of AC Power. Ensure correct selection before repair.

1.3. Protection Circuitry

The protection circuitry may have operated if either of the following conditions are noticed:

- No sound is heard when the power is turned on.
- Sound stops during a performance.

The function of this circuitry is to prevent circuitry damage if, for example, the positive and negative speaker connection wires are

"shorted", or if speaker systems with an impedance less than the indicated rated impedance of the amplifier are used.

If this occurs, follow the procedure outlines below:

1. Turn off the power.
2. Determine the cause of the problem and correct it.
3. Turn on the power once again after one minute.

Note:

When the protection circuitry functions, the unit will not operate unless the power is first turned off and then on again.

1.4. Caution for AC Cord (For GS only)

(For Saudi Arabia and Kuwait)

("GS" area code model only)

For your safety, please read the following text carefully.
This appliance is supplied with a moulded three pin mains plug for your safety and convenience.
A 5-ampere fuse is fitted in this plug.
Should the fuse need to be replaced please ensure that the replacement fuse has a rating of 5-ampere and that it is approved by ASTA or BSI to BS1362.
Check for the ASTA mark or the BSI mark on the body of the fuse.

If the plug contains a removable fuse cover you must ensure that it is refitted when the fuse is replaced.
If you lose the fuse cover the plug must not be used until a replacement cover is obtained.
A replacement fuse cover can be purchased from your local dealer.

CAUTION!
IF THE FITTED MOULDED PLUG IS UNSUITABLE FOR THE SOCKET OUTLET IN YOUR HOME THEN THE FUSE SHOULD BE REMOVED AND THE PLUG CUT OFF AND DISPOSED OF SAFELY. THERE IS A DANGER OF SEVERE ELECTRICAL SHOCK IF THE CUT OFF PLUG IS INSERTED INTO ANY 13-AMPERE SOCKET.

If a new plug is to be fitted please observe the wiring code as stated below.
If in any doubt please consult a qualified electrician.

IMPORTANT

The wires in this mains lead are coloured in accordance with the following code:
Blue: Neutral, Brown: Live.
As these colours may not correspond with the coloured markings identifying the terminals in your plug, proceed as follows:
The wire which is coloured Blue must be connected to the terminal which is marked with the letter N or coloured Black or Blue.
The wire which is coloured Brown must be connected to the terminal which is marked with the letter L or coloured Brown or Red.

WARNING: DO NOT CONNECT EITHER WIRE TO THE EARTH TERMINAL WHICH IS MARKED WITH THE LETTER E, BY THE EARTH SYMBOL ⏚ OR COLOURED GREEN OR GREEN/YELLOW.

THIS PLUG IS NOT WATERPROOF—KEEP DRY.

Before use

Remove the connector cover.

How to replace the fuse

The location of the fuse differ according to the type of AC mains plug (figures A and B). Confirm the AC mains plug fitted and follow the instructions below.
Illustrations may differ from actual AC mains plug.

1. Open the fuse cover with a screwdriver.

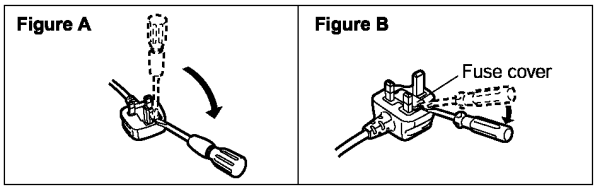

2. Replace the fuse and close or attach the fuse cover.

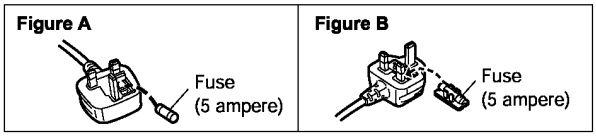

2 Prevention of Electro Static Discharge (ESD) to Electrostatically Sensitive (ES) Devices

Some semiconductor (solid state) devices can be damaged easily by static electricity. Such components commonly are called Electrostatically Sensitive (ES) Devices. Examples of typical ES devices are integrated circuits and some field-effect transistors and semiconductor "chip" components. The following techniques should be used to help reduce the incidence of component damage caused by electro static discharge (ESD).

1. Immediately before handling any semiconductor component or semiconductor-equipped assembly, drain off any ESD on your body by touching a known earth ground. Alternatively, obtain and wear a commercially available discharging ESD wrist strap, which should be removed for potential shock reasons prior to applying power to the unit under test.
2. After removing an electrical assembly equipped with ES devices, place the assembly on a conductive surface such as aluminum foil, to prevent electrostatic charge buildup or exposure of the assembly.
3. Use only a grounded-tip soldering iron to solder or unsolder ES devices.
4. Use only an anti-static solder removal device. Some solder removal devices not classified as "anti-static (ESD protected)" can generate electrical charge sufficient to damage ES devices.
5. Do not use freon-propelled chemicals. These can generate electrical charges sufficient to damage ES devices.
6. Do not remove a replacement ES device from its protective package until immediately before you are ready to install it. (Most replacement ES devices are packaged with leads electrically shorted together by conductive foam, aluminum foil or comparable conductive material).
7. Immediately before removing the protective material from the leads of a replacement ES device, touch the protective material to the chassis or circuit assembly into which the device will be installed.

   Caution

   Be sure no power is applied to the chassis or circuit, and observe all other safety precautions.
8. Minimize bodily motions when handling unpackaged replacement ES devices. (Otherwise harmless motion such as the brushing together of your clothes fabric or the lifting of your foot from a carpeted floor can generate static electricity (ESD) sufficient to damage an ES device).

IMPORTANT SAFETY NOTICE

There are special components used in this equipment which are imporant for safety.
These parts are marked by ⚠ in the schematic diagrams, Exploded Views and replacement parts list. It is essential that these critical parts should be replaced with manufacturer's specified parts to prevent shock. fire, or other hazards. Do not modify the original design without permission of manufacturer.

3 Precaution of Laser Diode

CAUTION:
THIS PRODUCT UTILIZES A LASER.
USE OF CONTROLS OR ADJUSTMENTS OR PERFORMANCE OF PROCEDURES OTHER THAN THOSE SPECIFIED HEREIN MAY RESULT IN HAZARDOUS RADIATION EXPOSURE.

CAUTION :

This product utilizers a class 1 laser. Invisible laser radiation is emitted from the optical pick up lens.

When the unit is turned on:

Wavelength : 662nm (DVD) / 785nm (CD)

Maximum output radiation power from pick up : 100μW/VDE

Laser radiation from pick up unit is safety level, but be sure the followings:

1. Do not disassemble the optical pick up unit, since radiation from exposed laser diode is dangerous.
2. Do not adjust the variable resistor on the pick up unit. It was already adjusted.
3. Do not look at the focus lens using optical instruments.
4. Recommend not to look at pick up lens for a long time.

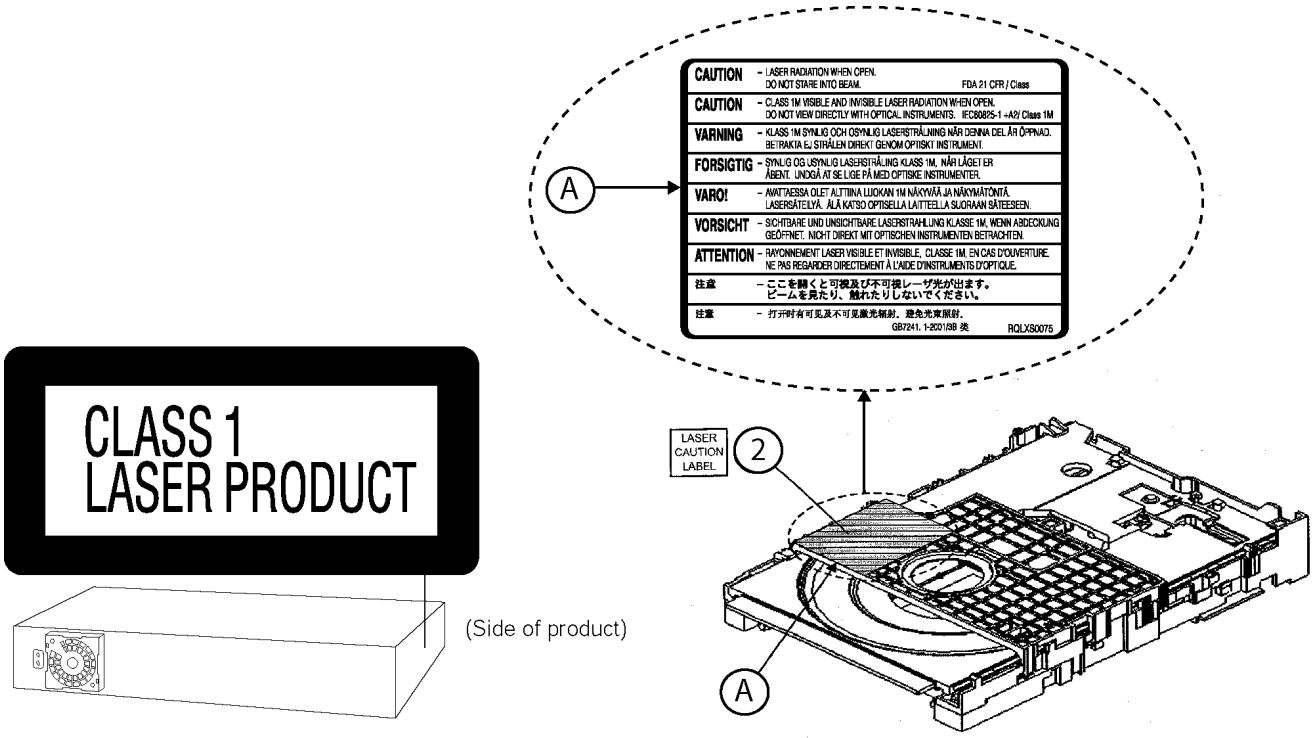

4 About Lead Free Solder (PbF)

4.1. Service caution based on legal restrictions

4.1.1. General description about Lead Free Solder (PbF)

The lead free solder has been used in the mounting process of all electrical components on the printed circuit boards used for this equipment in considering the globally environmental conservation.

The normal solder is the alloy of tin (Sn) and lead (Pb). On the other hand, the lead free solder is the alloy mainly consists of tin (Sn), silver (Ag) and Copper (Cu), and the melting point of the lead free solder is higher approx.30 degrees C (86°F) more than that of the normal solder.

Definition of PCB Lead Free Solder being used

The letter of “PbF” is printed either foil side or components side on the PCB using the lead free solder. (See right figure)	PbF

Service caution for repair work using Lead Free Solder (PbF)

- The lead free solder has to be used when repairing the equipment for which the lead free solder is used.
  (Definition: The letter of “PbF” is printed on the PCB using the lead free solder.)
- To put lead free solder, it should be well molten and mixed with the original lead free solder.
- Remove the remaining lead free solder on the PCB cleanly for soldering of the new IC.
- Since the melting point of the lead free solder is higher than that of the normal lead solder, it takes the longer time to melt the lead free solder.
- Use the soldering iron (more than 70W) equipped with the temperature control after setting the temperature at 350±30 degrees C (662±86°F).

Recommended Lead Free Solder (Service Parts Route.)

- The following 3 types of lead free solder are available through the service parts route.
  RFKZ03D01K----------(0.3mm 100g Reel)
  RFKZ06D01K----------(0.6mm 100g Reel)
  RFKZ10D01K----------(1.0mm 100g Reel)

Note

* Ingredient: tin (Sn), 96.5%, silver (Ag) 3.0%, Copper (Cu) 0.5%, Cobalt (Co) / Germanium (Ge) 0.1 to 0.3%

5 Handling Precautions for Traverse Unit

The laser diode in the optical pickup unit may break down due to static electricity of clothes or human body. Special care must be taken avoid caution to electrostatic breakdown when servicing and handling the laser diode.

5.1. Cautions to Be Taken in Handling the Optical Pickup Unit

The laser diode in the optical pickup unit may be damaged due to electrostatic discharge generating from clothes or human body. Special care must be taken avoid caution to electrostatic discharge damage when servicing the laser diode.

1. Do not give a considerable shock to the optical pickup unit as it has an extremely high-precise structure.
2. To prevent the laser diode from the electrostatic discharge damage, the flexible cable of the optical pickup unit removed should be short-circuited with a short pin or a clip.
3. The flexible cable may be cut off if an excessive force is applied to it. Use caution when handling the flexible cable.
4. The antistatic FPC is connected to the new optical pickup unit. After replacing the optical pickup unit and connecting the flexible cable, cut off the antistatic FPC.

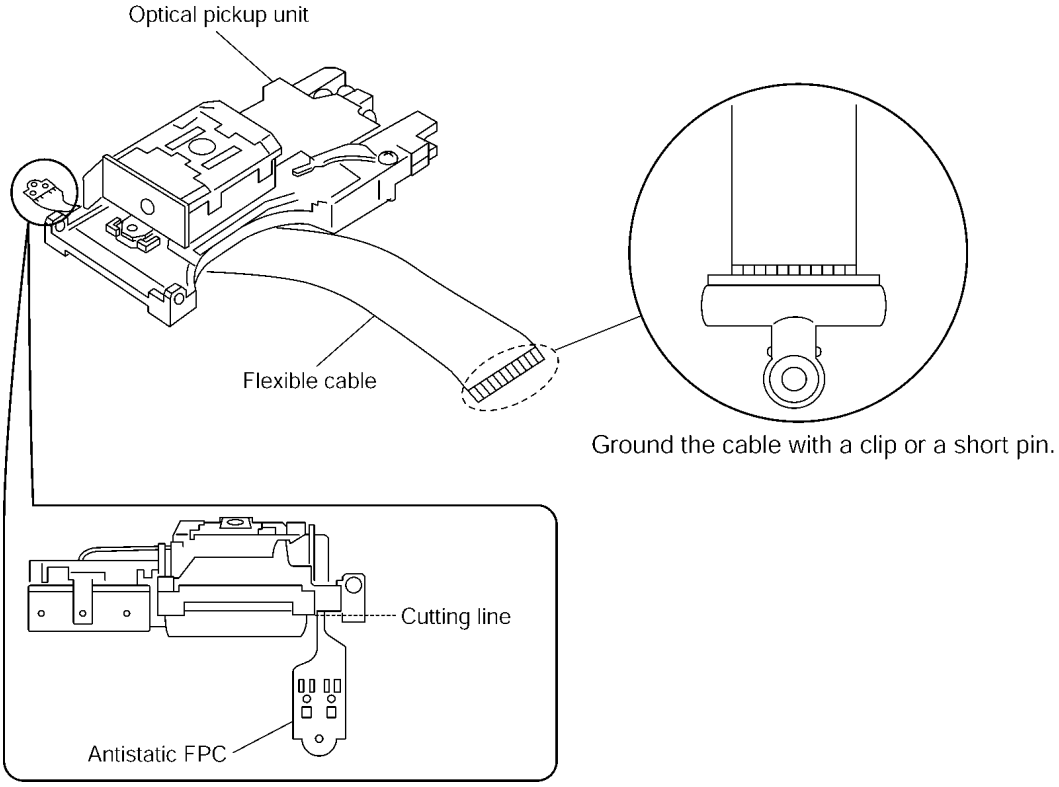

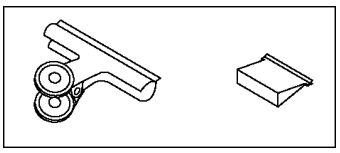

Clip or Short pin

5.2. Grounding for electrostatic breakdown prevention

Some devices such as the DVD player use the optical pickup (laser diode) and the optical pickup will be damaged by static electricity in the working environment. Proceed servicing works under the working environment where grounding works is completed.

5.2.1. Worktable grounding

1. Put a conductive material (sheet) or iron sheet on the area where the optical pickup is placed, and ground the sheet.

5.2.2. Human body grounding

1. Use the anti-static wrist strap to discharge the static electricity form your body.

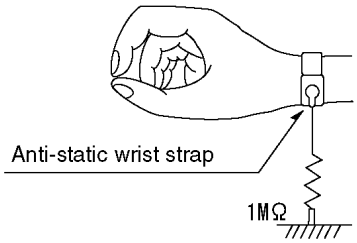
Anti-static wrist strap
1MΩ

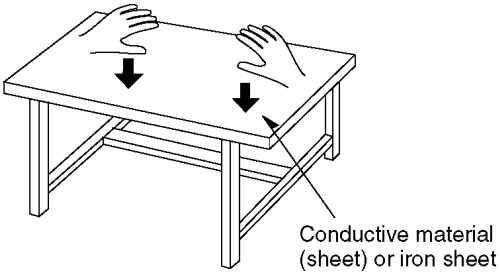
Conductive material
(sheet) or iron sheet

6 Accessories

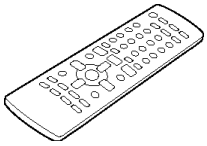

Remote control

AM loop antenna

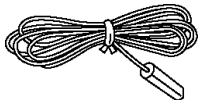

FM indoor antenna

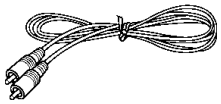

Video cable

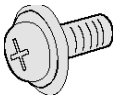

Screws

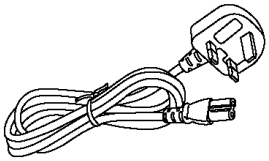

AC cord
(For GS only)

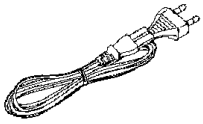

AC cord

Speaker cable

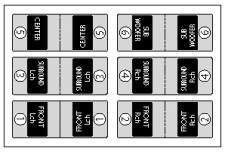

Speaker label

7 Operation Procedures

7.1. Remote Control Key Buttons Operations

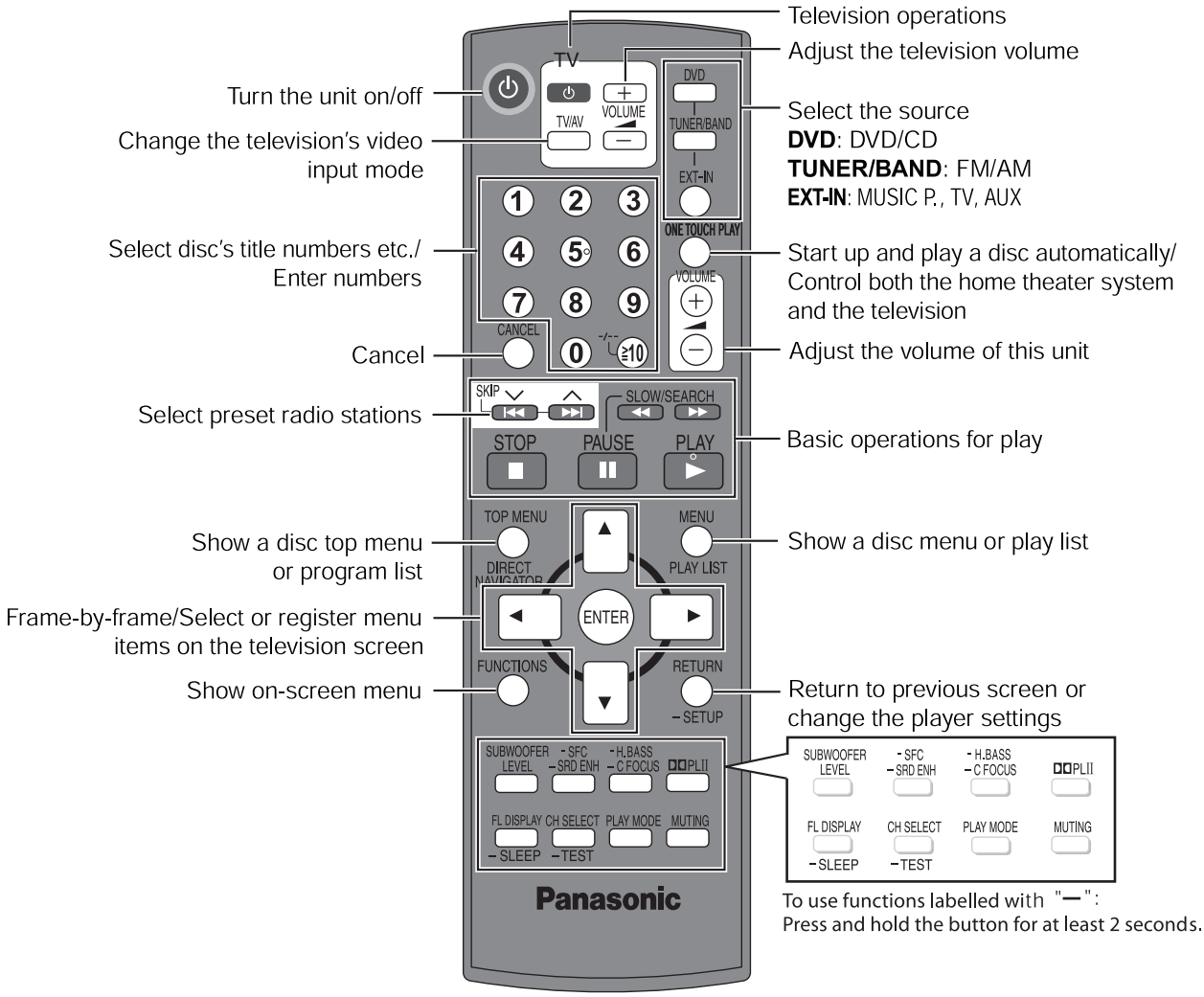

7.2. Main Unit Key Buttons Operations (SA-HT995)

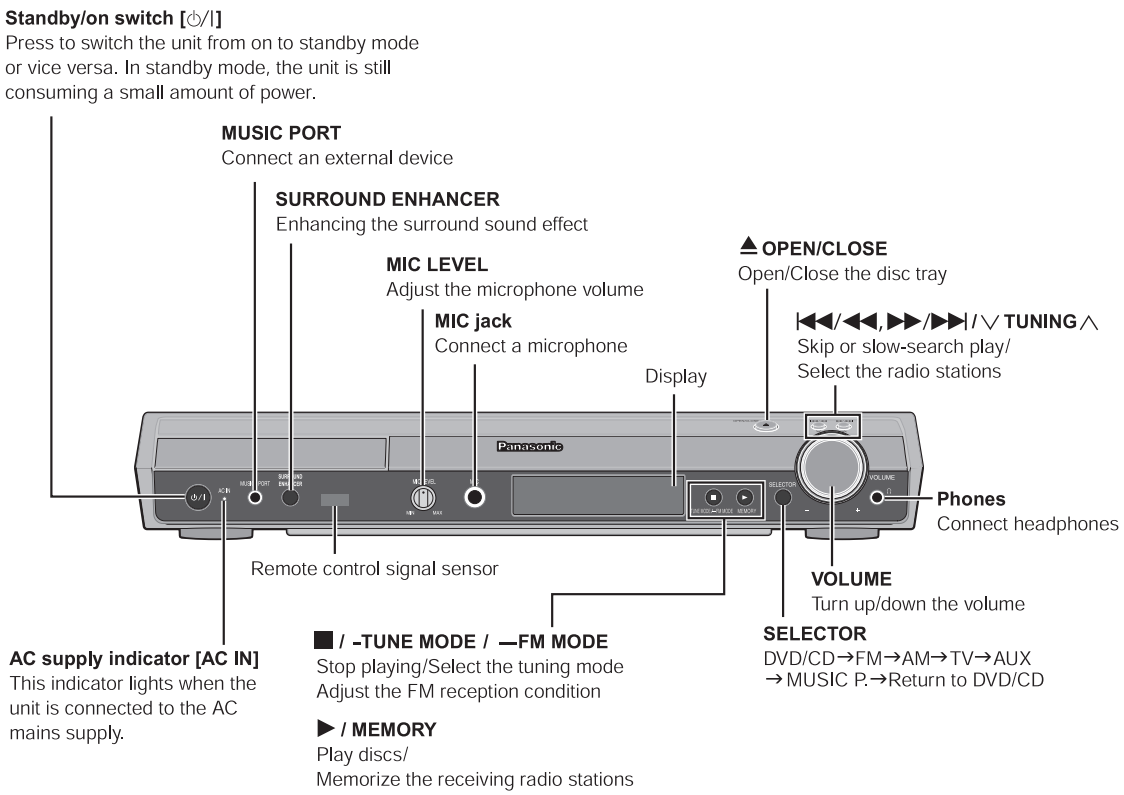

7.3. Use of HDAVI Control

Operating both the television and the home theater system: Control with HDMI (HDAVI Control)

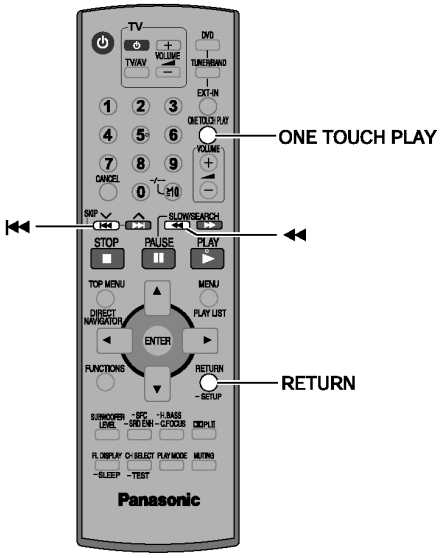

What is HDAVI Control?
HDAVI Control is a convenient function that offers linked operation of this unit and Panasonic TV (VIERA) with HDAVI Control. You can use this function by connecting the equipment with the HDMI cable. For operational details, see the operating instructions of the connected equipment.

Preparation
- Confirm that the HDMI connection (O.I. page 13) has been made.
- Set "Control with HDMI" (HDAVI Control) to "On"
- (Refer to O.I. page 30, "HDMI" tab).
- To complete and activate the connection correctly, turn on all HDAVI Control compatible equipment and select the input channel corresponding to the home theater on the television.

- Whenever the connection or settings are changed, reconfirm the points above.
- When you turn off this unit, TV selector changes to TV tuner.

One Touch Play

You can turn on this unit and television, and start playing the disc in the play position with a single press of a button.

Press [ONE TOUCH PLAY].

[Note]
Playback may not be immediately displayed on the television. If you miss the beginning portion of playback, press [I◀◀] or [◀◀] to go back to where playback started.

Automatic input switching

When the following operation is performed the television will automatically switch the input channel and display the corresponding action.
– When play starts on the unit

Theatre speaker

You can select whether audio is output from the home theater system or the television by using the television settings. For details, refer to the operating instructions of your television.

When audio is output from the home theater speakers
- The television speakers are automatically muted.
- You can control the volume setting using the volume or mute button on the television remote control. (The volume level is displayed on the main unit's FL display.)
- If you turn off the home theater system, speakers automatically switch to the television.

When audio is output from the television speakers
- The volume of the home theater system is set to "0".
- Audio output is 2-channel audio.

- To cancel muting, you can also use the home theater remote control (Refer to O.I.page 36, Muting the sound).
- When switching between the home theater system and television speakers, the TV screen may be blank for several seconds.

Power off link

When the television is turned off, the home theater system goes into standby mode automatically.
- This function works only when "DVD/CD" or "TV" is selected as the source on the home theater system.
- When the television is turned on, the home theater system does not turn on automatically.
(Power on link is not available.)

7.4. Using of Music Port

Using the Music Port

The Music Port allows you to connect and enjoy music from an external device (e.g. MP3 player) through your home theater system.

Preparation
To avoid distorted sound, make sure that any equalizer function of your external device is turned off.

1 Reduce the volume and connect the external device (not included).
Plug type: ∅3.5 mm stereo mini plug

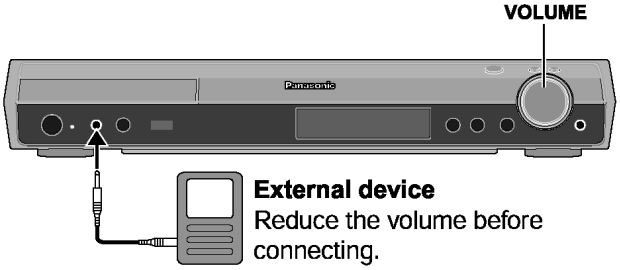

2 Press [EXT-IN] to select "MUSIC P.".

MUSIC P. → TV → AUX → MUSIC P.

3 Adjust the external device volume to a normal listening level, and then adjust the volume of this unit with [VOLUME].
You can enjoy surround sound when you turn on Sound Field Control (MOVIE, SPORT or MUSIC)

7.5. Disc Information

7.5.1. Disc Playability (Media)

■ Discs that can be played

DVD VIDEO	**DVD-Video** DVD-V —
DVD AUDIO	**DVD-Audio** DVD-A DVD-V ● DVD-V Some DVD-Audio discs contain DVD-Video content.
COMPACT disc DIGITAL VIDEO / COMPACT disc SUPER VIDEO	**Video CD** VCD ● Including SVCD (Conforming to IEC62107).
DVD RAM RAM4.7	**DVD-RAM** DVD-VR MP3 JPEG MPEG4 DivX ※1 ● DVD-VR Recorded with devices using Version 1.1 of the Video Recording Format (a unified video recording standard), such as DVD video recorders, DVD video cameras, personal computers, etc. ● JPEG Recorded with Panasonic SD multi cameras or DVD video recorders using the DCF (Design rule for Camera File System) Standard Version 1.0. ● MPEG4 Recorded with Panasonic SD multi cameras or DVD video recorders [conforming to SD VIDEO specifications (ASF standard)/MPEG4 (Simple Profile) video system/G.726 audio system].
DVD R R4.7 / DVD RW / DVD R R DL	**DVD-R (DVD-Video)※2/DVD-RW (DVD-Video)** DVD-V ● Discs recorded and finalized※3 on DVD video recorders or DVD video cameras. **DVD-R (VR)※2/DVD-RW(VR)** DVD-VR ● Discs recorded and finalized※3 on DVD video recorders or DVD video cameras using Version 1.1 (or 1.2 DVD-R DL only) of the Video Recording Format (a unified video recording standard). **DVD-R/DVD-RW** MP3 JPEG MPEG4 DivX ※1 ● Finalize※3 the disc after recording.
—	**+R(Video)※2/+RW(Video)** DVD-V ● Discs recorded and finalized※3 on DVD video recorders or DVD video cameras.
COMPACT disc DIGITAL AUDIO / COMPACT disc DIGITAL AUDIO TEXT	**CD** CD WMA MP3 JPEG VCD MPEG4 DivX ※1 ● This unit can play CD-R/RW recorded with the above formats. Close the sessions or finalize※3 the disc after recording. ● CD This unit is compatible with HDCD, but does not support the Peak Extend function (a function which expands the dynamic range of high-level signals). HDCD-encoded CDs sound better because they are encoded with 20 bits, as compared with 16 bits for all other CDs. ● WMA MP3 JPEG This unit also plays HighMAT discs. ● WMA This unit does not support Multiple Bit Rate (MBR: an encoding process for audio content that produces an audio file encoded at several different bit rates).

※1 Functions added with DivX Ultra are not supported.
※2 Includes single-sided, dual-layer discs.
※3 A process that allows play on compatible equipment.
● It may not be possible to play all the above-mentioned discs in some cases due to the type of disc or condition of the recording.

■ Discs that cannot be played

DVD-RW version 1.0, DVD-ROM, CD-ROM, CDV, CD-G, SACD, DivX Video Discs and Photo CD, DVD-RAM that cannot be removed from their cartridge, 2.6-GB and 5.2-GB DVD-RAM, and "Chaoji VCD" available on the market including CVD, DVCD and SVCD that do not conform to IEC62107.

■ To clean discs

Wipe with a damp cloth and then wipe dry.

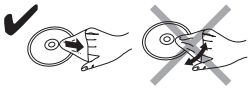

■ Disc handling precautions

- Do not attach labels or stickers to discs. This may cause disc warping, rendering it unusable.
- Do not write on the label side with a ball-point pen or other writing instrument.
- Do not use record cleaning sprays, benzine, thinner, liquids which prevent static electricity, or any other solvent.
- Do not use scratch-proof protectors or covers.
- Do not use the following discs:
  – Discs with exposed adhesive from removed stickers or labels (rented discs, etc).
  – Discs that are badly warped or cracked.
  – Irregularly shaped discs, such as heart shapes.

■ Video systems

- This unit can play PAL and NTSC, but your television must match the system used on the disc.
- PAL discs cannot be correctly viewed on an NTSC television.
- This unit can convert NTSC signals to PAL 60 for viewing on a PAL television.

■ Clean this unit with a soft, dry cloth.

- Never use alcohol, paint thinner or benzine to clean this unit.
- Before using chemically treated cloth, carefully read the instructions that came with the cloth.

Do not use commercially available lens cleaners as they may cause malfunction. Cleaning of the lens is generally not neccessary although this depends on the operating environment.

Before moving the unit, ensure the disc trays are empty.
Failure to do so will risk severely damaging the disc and the unit.

7.5.2. File Extension Type Support (WMA/MP3/JPEG/MPEG4/DivX)

Tips for making data discs

When there are more than 8 groups, the eighth group onwards will be displayed on one vertical line in the menu screen.
There may be differences in the display order on the menu screen and computer screen.
This unit cannot play files recorded using packet write.

DVD-RAM

Discs must conform to UDF 2.0.

DVD-R/RW

Discs must conform to UDF bridge (UDF 1.02/ISO9660).
This unit does not support multi-session. Only the default session is played.

CD-R/RW

Discs must conform to ISO9660 level 1 or 2 (except for extended formats).
This unit supports multi-session but if there are many sessions it takes more time for play to start. Keep the number of sessions to a minimum to avoid this.

Naming folders and files
(Files are treated as contents and folders are treated as groups on this unit.)

At the time of recording, prefix folder and file names. This should be with numbers that have an equal number of digits, and should be done in the order you want to play them (this may not work at times).
Files must have the extension.

e.g. [MP3]

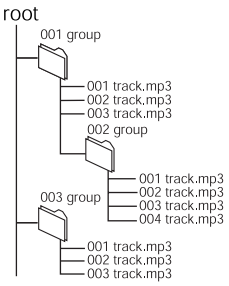

[WMA] (Extension: ".WMA" or ".wma")

Compatible compression rate: between 48 kbps and 320 kbps
You cannot play WMA files that are copy-protected.
This unit does not support Multiple Bit Rate (MBR).

[MP3] (Extension: ".MP3" or ".mp3")

Compatible compression rate: between 32 kbps and 320 kbps
This unit does not support ID3 tags.
Compatible sampling rates:
– DVD-RAM, DVD-R/RW: 11.02, 12, 22.05, 24, 44.1 and 48 kHz
– CD-R/RW: 8, 11.02, 12, 16, 22.05, 24, 32, 44.1 and 48 kHz

[JPEG] (Extension: ".JPG", ".jpg", ".JPEG" or ".jpeg")

JPEG files taken on a digital camera that conform to DCF Standard (Design rule for Camera File system) Version 1.0 are displayed. Files that have been altered, edited or saved with computer picture editing software may not be displayed.
This unit cannot display moving pictures, MOTION JPEG and other such formats, and still pictures other than JPEG (e.g. TIFF), or play pictures with attached audio.

[MPEG4] (Extension: ".ASF" or ".asf")

You can play MPEG4 data [conforming to SD VIDEO specifications (ASF standard)/MPEG4 (Simple Profile) video system/G.726 audio system] recorded with Panasonic SD multi cameras or DVD video recorders with this unit.
The recording date may differ from that of the actual date.

[DivX] (Extension: ".DIVX", ".divx", ".AVI" or ".avi")

You can play all versions of DivX® video (including DivX®6) [DivX video system/MP3, Dolby Digital or MPEG audio system] with standard playback of DivX® media files. Functions added with DivX Ultra are not supported.
GMC (Global Motion Compensation) is not supported.
DivX files greater than 2 GB or have no index may not be played properly on this unit.
This unit supports all resolutions up to maximum of 720 k 480 (NTSC)/720 k 576 (PAL).
You can select up to 8 types of audio and subtitles on this unit.

7.6. About DivX VOD Content

DivX Video-on-Demand (VOD) content is encrypted for copyright protection. In order to play DivX VOD content on this unit, you first need to register the unit.

Follow the online instructions for purchasing DivX VOD content to enter the unit's registration code and register the unit. For more information about DivX VOD, visit www.divx.com/vod.

Display the unit's registration code

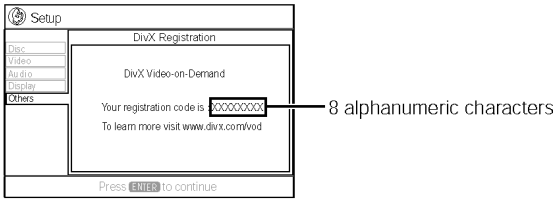

- We recommend that you make a note of this code for future reference.
- After playing DivX VOD content for the first time, another registration code is then displayed in "DivX Registration". Do not use this registration code to purchase DivX VOD content. If you use this code to purchase DivX VOD content, and then play the content on this unit, you will no longer be able to play any content that you purchased using the previous code.
- If you purchase DivX VOD content using a registration code different from this unit's code, you will not be able to play this content. ("Authorization Error" is displayed.)

Regarding DivX content that can be only be played a set number of times

Some DivX VOD content can only be played a set number of times. When you play this content, the remaining number of plays is displayed. You cannot play this content when the number of remaining plays is zero. ("Rented Movie Expired" or "Rental Expired" is displayed.)

When playing this content

- The number of remaining plays is reduced by one if
  - you press [⏻] or press and hold [—SETUP].
  - you press [■ STOP]. (Press [❚❚ PAUSE] to pause play.)
  - you press [⏮, ⏭ SKIP] or [◀◀, ▶▶SLOW/SEARCH] etc. and arrive at another content or the start of the content being played.
- Resume and Marker functions do not work.

8 New Features

8.1. About HDMI

8.1.1. What is HDMI?

AN INTERFACE DESIGNED FOR THE DIGITAL REVOLUTION

From broadcast equipment to TVs, the AV world is going digital. As this digital revolution unfolds, there's a growing need for an interface that digitally transmits signals between connected equipment. The solution: HDMI, or High-Definition Multimedia Interface.
HDMI transmits digital video and audio signals at speeds up to 5 Gps without compr essing them. It supports high-definition images up to 1080p and high-quality , multi-channel audio formats such as DVD-Audio. And it provides all this performance with the ease of connecting a single cable.
Also equipped with a copyright protection function, HDMI is a simple, high-performance interface that supports the growing digital age.

HDMI™
HIGH-DEFINITION MULTIMEDIA INTERFACE

FOUNDERS
HITACHI
Panasonic
PHILIPS
SILICON IMAGE
SONY
THOMSON
TOSHIBA

HDMI™
HIGH-DEFINITION MULTIMEDIA INTERFACE

1. ADVANCED DIGITAL PICTURES
Digital transmission of video signals helps maximize the quality of HDTV images.

2. ADVANCED DIGITAL SOUND
Digital transmission of multi-channel audio signals, such as DVD-Audio signals, provides an exceptionally pure sound.

3. EASY TO USE
Both video and audio signals are transmitted over a single cable, so connection is easier and there's less clutter.

	Video Signal Type	Audio Signal	Copyright Pr otection	Signal Compr ession
HDMI	Digital	●	●	Without compr ession
IEEE 1394	Digital	●	●	Compression
DVI + HDCP	Digital	–	●	Without compr ession
DVI	Digital	–	–	Without compr ession

8.1.2. Advanced Digital Pictures

Compare HDMI connection with conventional analog connection, using the DVD player as an example. With an analog connection, the digital signal from the DVD player is converted to analog and sent to the TV, then converted back to digital and displayed. Inevitably, there is some loss of picture quality due to conversion errors and to noise and signal degradation that occurs as the signal travels through the cable.
With HDMI, on the other hand, the DVD signal is transmitted to the TV in its original digital form. There is no conversion from digital to analog and back, and thus no quality loss from conversion errors. Image quality is thus higher. Plus, because HDMI supports 480p, 1080i, and up to 1080p high-definition images with copy protection, it produces images with quality that is ideal for large-screen viewing.

Video Signal Transmission – HDMI vs. Analog

Conventional Analog Connection

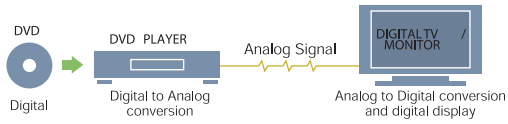

HDMI Connection

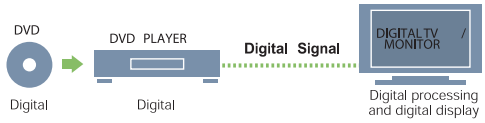

Monitors that Maximize HDMI's Advantages

In plasma display panels, liquid crystal displays, and LCD projectors, the image processing and display systems are digital. When a set-top box or DVD player is connected to one of these monitors via HDMI, the signal processing is digital all the way from transmission to display, so the images are beautiful.

8.1.3. Advanced Digital Sound

The super-high-quality linear PCM sound provided by DVD-Audio is not given its full potential when the digital signal is transmitted through an analog cable.
With a conventional analog connection, the digital signal carrying DVD-Audio's detailed audio data is converted to analog before being sent to the amplifier and output. Sound quality is diminished due to noise and signal degradation.
HDMI, on the other hand, transmits the signal in its original digital form, so the sound is extremely pure. HDMI also supports up to eight channels of multi-channel sound. Plus, it connects the player and amplifier with a single cable, rather than the multiple cables needed in conventional connection.

Connection Example

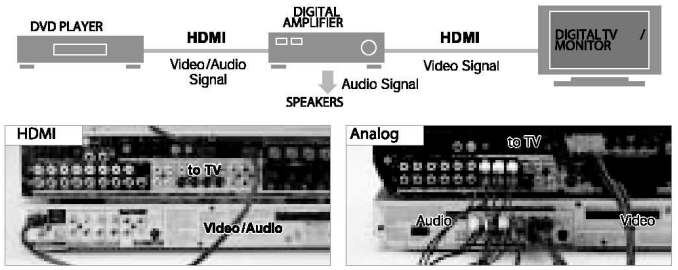

Player and amplifier are connected by a single cable. Connection is quick and easy, and there's no clutter.

It generally takes more than six cables to connect player and amplifier. Connection is more complicated, and there are more cables to get in the way.

Linked Control

Here's an example of how linked control will work among HDMI-compatible units in the future. When you insert a disc into the DVD player and press Play, the amplifier and TV automatically turn on too. You get the advantage of one-touch operating ease as well as superior picture and sound quality.

8.1.4. Easy to Use

HDMI transmits both video and audio signals over a single cable, so connection is quick and easy and the area around the TV remains uncluttered. Also, when each of the connected units is HDMI-compatible, control signals can be exchanged among them. This means that, in the future, it will be possible to operate several units from a single remote control, or to operate several units via linked control.

8.1.5. HDMI Compatible Products

Monitors

VIERA

High-Definition Plasma TV
TH-50PX25U/P, TH-42PX25U/P
TH-37PX25U/P

TH-50PX25U/P

High-Definition LCD TV
TC-32LX20, TC-26LX20

TC-32LX20

LCD Pojector
TH-AE700

DVD Players

DVD-Audio/Video Player
DVD-S97

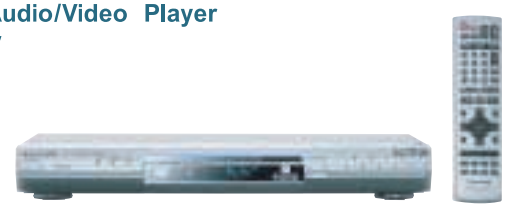

Receivers

Home Theater Receiver
SA-XR70

9 Self-Diagnosis and special mode setting

9.1. Service Mode Summary Table

The service modes can be activated by pressing various button combination on the player and remote control unit.

Below is the summary of major checking:

Player buttons	Remote control unit buttons	Application	Note
STOP	0	Error code display	(Refer to the section, “9.3 DVD Self Diagnostic Function-Error Code”).
	5	Jitter checking	(Refer to the section “9.2.1. Service Mode Table 1” for more information).
	6	Region display and mode	(Refer to the section “9.2.2. Service Mode Table 2” for more information).
	7	Micro-processor firmware version check	
	8	DVD HDMI module firmware version check.	
	≧10	Initialization of the player (factory setting is restored.) Used after replacement of micro-computer, FLASH ROM IC, EEPROM and HDMI module.	
	ENTER	DVD Module Reset.	(Refer to the section “9.2.3. Service Mode Table 3” for more information).
	FUNCTIONS	DVD laser drive current check	(Refer to the item “9.2.4. Optical Pick-up Self-Diagnosis”).
	3	CD laser drive current check	
	PAUSE	Writing of laser drive current value after replacement of optical pickup (Do use this function only when optical pickup is replaced.)	

9.2. Service Mode Table

By pressing various button combinations on the player and remote control unit can activate the various service modes for checking.

Special Note:

Due to the limitations of the no. characters that can be shown on FL Display, the “FL Display” button on the remote control uni is used to show the following page. (Display 1/Display 2).

9.2.1. Service Mode Table 1

Item		FL Display	Key Operation
Mode Name	Description		Front Key
Jitter check	Jitter check Jitter rate is measured and displayed. Measurement is repeatedly done in the cycle of one second. Read error counter starts from zero upon mode setting. When target block data failed to be read out, the counter advances by one increment. When the failure is caused by minor error, it may be corrected when retried to enable successful reading. In this case, the counter advances by one. When the error persists even after retry, the counter may jump by two or more.	J 000 Jitter rate Jitter check mode Jitter rate is shown in decimal notation to one place of decimal. Focus drive value is shown in hexadecimal notation.	In STOP (no disc) mode, press STOP button on the player, and "5" button on the remote control unit. Press STOP or OPEN button to exit. Press "FL Display" on remote control unit for next page (FL Display).
Error code check	Error code check The latest error code stored in the EEPROM IC is displayed.	DVD H01 Error code (play_err) is expressed in the following convention. Error code = 0 x DAXX is expressed: DVDnn UXX Error code = 0 x DBXX is expressed: → DVDnn HXX Error code = 0 x DXXX is expressed: → DVDnn FXXX Error code = 0 x 0000 is expressed: → DVDnn F--- * "xx" denotes the error code →	In STOP (no disc) mode, press STOP button on the player, and "0" button on the remote control unit. * With pointing of cursor up and down on display. Cancelled automatically 5 seconds later. To exit, press [POWER] button on main unit or remote control.
Initial setting of laser drive current	Initial setting of laser drive current. Initial current value for each of DVD laser and CD laser is separately saved in the EEPROM IC.	LD0 Laser current measurement mode The value denotes the current in decimal notation. The above example shows the initial current is 34mA and 28mA for DVD laser and CD laser respectively when the laser is switched on.	In STOP (no disc) mode, press STOP button on the player, and PAUSE button on the remote control unit. Cancelled automatically 5 seconds later. Press "FL Display" on remote control unit for next page (FL Display) on values of laser drive current.
DVD laser drive current measurement	DVD laser drive current measurement ·DVD laser drive current is measured and the result is displayed together with the initial value stored in the EEPROM IC. After the measurement, DVD laser emission is kept on. It is turned off when POWER key is switched off. (It is also turned off when POWER button on the player is switched off.)	LDD DVD laser current measurement mode The value denotes the current in decimal notation. The above example shows the initial current is 34mA and the measured value is 32mA.	In STOP (no disc) mode, press STOP button on the player, and FUNCTIONS button on the remote control unit. Cancelled automatically 5 seconds later. Press "FL Display" on remote control unit for next page (FL Display) on values of dvd drive current.
ADSC internal RAM data check	ADSC internal RAM data check ·ADSC internal RAM data is read out and displayed.	FB0 0000 Address RAM data for specified address The value is shown in hexadecimal notation. The above example shows the data in ADSC address OFAh is 6901h.	In STOP (no disc) mode, press STOP button on the player, and "1" button on the remote control unit. Press STOP or PLAY button.
CD laser drive current measurement	CD laser drive current measurement CD laser drive current is measured and the result is displayed together with the initial value stored in the EEPROM IC. After the measurement, CD laser emission is kept on. It is turned off when POWER key is switched off. (It is also turned off when POWER button on the player is switched off.)	LDC CD laser current measurement mode The value denotes the current in decimal notation. The above example shows the initial current is 28mA and the measured value is 26mA.	In STOP (no disc) mode, press STOP button on the player, and "3" button on the remote control unit. Cancelled automatically 5 seconds later. Press "FL Display" on remote control unit for next page. (FL Display)

9.2.2. Service Mode Table 2

Item		FL Display	Key Operation
Mode Name	Description		Front Key
Micro-processor firmware version display & EEPROM checksum display.	Micro-processor firmware version display & EEPROM checksum display. EEPROM checksum is only available due to existence of EEPROM IC. (NO: NO EEPROM IC) If EEPROM IC is present, the checksum value will be displayed. It displays as "NG" if the EEPROM IC installed is not working properly.	E031 031 NO Existence of EEPROM	In STOP (no disc) mode, press STOP button on the player, and "7" button on the remote control unit. Cancelled automatically 5 seconds later. Press "FL Display" button on remote control unit for next page. (FL Display)
Initialization	Initialization User settings are cancelled and player is initialized to factory setting.	INIT	In STOP (no disc) mode, press STOP button on the player , and ≧10 button on the remote control unit. Cancelled automatically 5 seconds later.
Region display	Region display & mode	[GC/GS] 2P6 445 Panel controller jumper information N: NTSC / 6: PAL60 N: noPAL / P: PAL Region No. [GCS] 3PN 445 Panel controller jumper information N: NTSC / 6: PAL60 N: noPAL / P: PAL Region No.	In STOP (no disc) mode, press STOP button on the player, and "6" button on the remote control unit. Cancelled automatically 5 seconds later.
DVD module firmware version display	DVD module firmware version is displayed on the FL Display. The firmware version can be updated using recovery disc.	[GC/GS] 2 00B417 System controller version Destination System controller generation Region [GCS] 3 00C417 System controller version Destination System controller generation Region	In STOP (no disc) mode, press STOP button on the player, and "8" button on the remote control unit. Cancelled automatically 5 seconds later.
Communication error display	Displays frequency of communication errors between system control IC and mechanism control IC during DVD module.	ER 00 30	In STOP (no disc) mode, press STOP button on the player, and "MENU" button on the remote control unit. Cancelled automatically 5 seconds later.

9.2.3. Service Mode Table 3

Item		FL Display	Key Operation
Mode Name	Description		Front Key
DVD Module Reset	To reset DVD Module. This process is used when the DVD module or flash ROM IC is replaced with a new one.	RESET	While in initialization mode, press & hold STOP button on player, follow by "ENTER" button on the remote control unit. Cancelled automatically 5 seconds later.
Timer 1 check	Timer 1 check Laser operation timer Operation time is measured separately for DVD laser and CD laser. Press "FL Display" button for next page of FL Display	T1 0020 Shown to the left is DVD laser time, and to the right CD laser time. Time is shown in 4 digits of decimal notation in a unit of 10 hours. "0000" will follow "9999".	In STOP (no disc) mode, press STOP button on the player, and "▲" button on the remote control unit. Cancelled automatically 5 seconds later.
Timer 1 reset	Timer 1 reset Laser operation timer Operation time of both DVD laser and CD laser is reset all at once. Press "FL Display" button for next page of FL Display	T1 0000 Shown to the left is DVD laser time, and to the right is CD laser time. It will clear to "0000" upon reset.	While displaying Timer 1 data, press STOP button on the player, and "▼" button on the remote control unit. Cancelled automatically 5 seconds later.
Timer 2 check	Timer 2 check Spindle motor operation timer Press "FL Display" button for next page of FL Display	T2 00020 Time is shown in 5 digits of decimal notation in a unit of 10 hours. "00000" will follow "99999".	In STOP (no disc) mode, press STOP button on the player, and "▶" button on the remote control unit. Cancelled automatically 5 seconds later.
Timer 2 reset	Timer 2 reset Spindle motor operation timer Press "FL Display" button for next page of FL Display	T2 00000 Time is shown in 5 digits of decimal notation in a unit of 10 hours. It will be cleared to "00000" upon activating this.	While displaying Timer 2 data, press STOP button on the player, and "◀" button on the remote control unit. Cancelled automatically 5 seconds later.

9.2.4. Optical Pick-up Self-Diagnosis

The optical pickup self-diagnosis function and tilt adjustment check function have been included in this unit. When repairing, use the following procedure for effective self-diagnosis and tilt adjustment. Be sure to use the self-diagnosis function before replacing the optical pickup when "NO DISC" is displayed. As a guideline, you should replace the optical pickup when the value of the laser drive current is more than 55.

Note:

Press the power button to turn on the power, and check the value within three minutes before the unit warms up. (Otherwise, the result will be incorrect.)

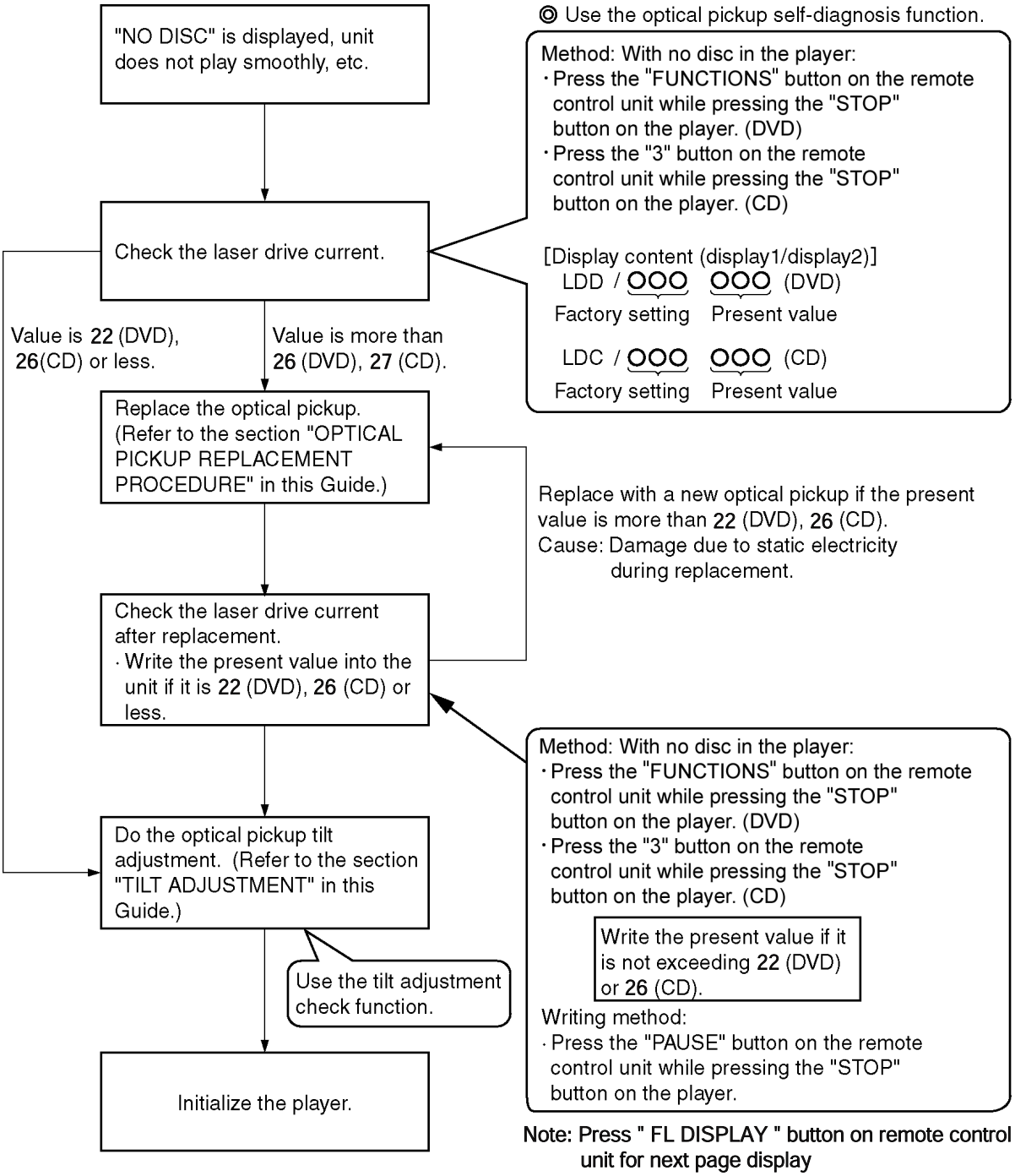

Note: Press " FL DISPLAY " button on remote control unit for next page display

9.3. DVD Self Diagnostic Function-Error Code

9.3.1. Error Code Table 1

Error Code	Diagnosis Contents	Description of error	Automatic FL Display	Remarks
U11	Focus servo error	Focus coil NG (OPU unit abnormal)	DVD U11	Press [n STOP] on main unit for next error.
H01	Tray loading error / abnormality	The tray is not able to open	DVD H01	Press [n STOP] on main unit for next error
H02	Spindle servo error, DSC disc motor error	(Spindle servo, DSC (IC8251) Spindle motor, CLV servo error)	DVD H02	Press [n STOP] on main unit for next error
H03	Traverse motor error	(Traverse motor, IC8251)	DVD H03	Press [n STOP] on main unit for next error
H04	Tracking servo error	Tracking coil NG (OPU unit abmormal)	DVD H04	Press [n STOP] on main unit for next error
H05	Seek timeout error	Timeout of unit when seeking time is reached	DVD H05	Press [n STOP] on main unit for next error
H15	Disc tray open detection switch (S9001) failure	The disc tray cannot be opened: it closes spontaneously	DVD H15	Press [n STOP] on main unit for next error
H16	Disc tray close detection switch (S9001) failure	The disc tray cannot be closed: it opens spontaneously	DVD H16	Press [n STOP] on main unit for next error
F61	Power digital amp IC op & DC output voltage abnormal.	Upon power-on PCONT=High, DCDET=Low. Speaker connection could be problem	DVD F61	Press [n STOP] on main unit for next error
F76	Power digital amp IC op & DC output voltage abnormal.	Speaker Jack shorted or amp circuit	DVD F76	Press [n STOP] on main unit for next error
F500	DSC error	DSC (IC8251) stops in the occurrence of servo error (startup, focus error, etc.)	DVD F500	Press [n STOP] on main unit for next error
F501	DSC not Ready error	DSC-system computer communication error (Communication failure caused by idling of DSC)	DVD F501	Press [n STOP] on main unit for next error
F502	DSC Time out error	Similar as F500	DVD F502	Press [n STOP] on main unit for next error
F503	DSC communication Failure	Communication error (result error occurred although communication command was sent)	DVD F503	Press [n STOP] on main unit for next error
F504	Abnormal adjusting DSC data slice offset		DVD F504	Press [n STOP] on main unit for next error
F505	DSC Attention error	Similar as F500	DVD F505	Press [n STOP] on main unit for next error

9.3.2. Error Code Table 2

Error Code	Diagnosis Contents	Description of error	Automatic FL Display	Remarks
F506	Invalid media	Disc is flipped over, TOC unreadable, incompatible disc media	DVD F506	Press [n STOP] on main unit for next error
F600	Access failure to management information caused by demodulation error	Operation stopped because navigation data is not accessible caused by the demodulation defect	DVD F600	Press [n STOP] on main unit for next error
F601	Indeterminate sector ID requested	Operation stopped caused by the request to access abnormal ID data	DVD F601	Press [n STOP] on main unit for next error
F602	Access failure to LEAD-IN caused by demodulation error	LEAD IN data unreadable	DVD F602	Press [n STOP] on main unit for next error
F603	Access failure to KEYDET caused by demodulation error	Access failure to CSS data of disc	DVD F603	Press [n STOP] on main unit for next error
F610	ODC abnormality	No permission for command execution	DVD F610	Press [n STOP] on main unit for next error
F611	No CRC OK for a specific time (CD)	Access failure to seek address in CD series	DVD F611	Press [n STOP] on main unit for next error
F612	No CRC OK for a specific time (DVD)	Access failure to ID data in DVD series	DVD F612	Press [n STOP] on main unit for next error
F620	Laser safeguard: high temperature condition	High temperature of the laser guide unit (OPU unit)	DVD F620	Press [n STOP] on main unit for next error
F621	Laser safeguard: circuit failure condition	Circuitry failure of the laser guide unit (OPU unit)	DVD F621	Press [n STOP] on main unit for next error
F103	Illegal highlight Position	Big possibility of disc specification violation during highlight display	DVD F103	Press [n STOP] on main unit for next error
F4FF	Force initialize failure (time out)	Timeout when force initialization fails	DVD F4FF	Press [n STOP] on main unit for next error
F700	MBX overflow	When replying message to disc manager	DVD F700	Press [n STOP] on main unit for next error
F701	Message command does not end	Next message is sent before replying to disc manager	DVD F701	Press [n STOP] on main unit for next error
F702	Message command changes	Message is changed before it is sent as a reply to disc manager	DVD F702	Press [n STOP] on main unit for next error

9.3.3. Error Code Table 3

Error Code	Diagnosis Contents	Description of error	Automatic FL Display	Remarks
F880	Task number is not appropriate	Message coming from a non-existing task	DVD F880	Press [n STOP] on main unit for next error
F890	Sending message when message is being sent to AV task	Sending message to AV task	DVD F890	Press [n STOP] on main unit for next error
F891	Message couldn't be sent to AV task	Begin sending message to AV task	DVD F891	Press [n STOP] on main unit for next error
F893	FLASH ROM IC problem	FLASH ROM IC installed is not operating properly (Neccessary replacement of FLASH ROM IC) or firmware problem	DVD F893	Press [n STOP] on main unit for next error
F894	EEPROM abnormality	EEPROM IC installed is not operating in normal condition (EEPROM contains neccessary data)	DVD F894	Press [n STOP] on main unit for next error
F895	Region setting abnormality	Firm version agreement check for factory preset setting failure prevention. Check region setting & re-initialize	DVD F895	Press [n STOP] on main unit for next error
F896	No existence model	Firm version agreement check for factory preset setting failure prevention	DVD F896	Press [n STOP] on main unit for next error
F897	Initialize is not completed	Initialize completion check for factory preset setting failure prevention	DVD F897	Press [n STOP] on main unit for next error
F898	Disagreement of hardware and software	Unsuitable combination of AV DECORDER, SDRAM and FLASH ROM (firmware)	DVD F898	Press [n STOP] on main unit for next error
F8A0	Message command is not appropriate	Begin sending message to AV task	DVD F8A0	Press [n STOP] on main unit for next error
U701	HDMI compatibility	The connected equipment is not HDMI-compatible, HDMI cable is damaged.	DVD U701	Press [n STOP] on main unit for next error

Note:

An error code will be canceled if a power supply is turned OFF.

*1: CPPM is the copy guard function beforehand written in the disk for protection of copyrights.

*2: CEC is the consumer electronic control used for high-level user control of HDMI-connected devices.

*3: HDCP is the specification developed to control digital audio & video contents transmission for DVI or HDMI connections.

9.4. Sales Demonstration Lock Function

This function prevents discs from being lost when the unit is used for sales demonstrations by disabling the disc eject function. "LOCKED" is displayed on the unit, and ordinary operation is disabled.

9.4.1. Setting

· **Prohibiting removal of disc**

1. Select the DVD/CD function.
2. Press and hold down the ■ button and the power button on the player for at least three seconds. (The message, "___LOCKED_" appears when the function is activated.)

Note:

OPEN/CLOSE ⏏ , DISC CHECK and DISC CHANGE buttons are invalid and the player displays "___LOCKED_" while

the lock function mode is entered.

- **Prohibiting operation of selector and disk**

1. Select the DVD/CD function.
2. Press and hold down the ► button and the power button on the player for at least three seconds. (The message, "___LOCKED_" appears when the function is activated.)

Note:

The following buttons are invalid and the player displays "___LOCKED_" while the lock function mode is entered.

Player	⏏ , ■ , ❚❚ , SELECTOR, ►►❙ , ❙◄◄ , VOLUME KNOB, DISC CHECK, DISC CHANGE, DISC1-DISC5
Remote controller unit	SLEEP, REPEAT, 0~9, ≧10 , RETURN, TOP MENU, ■ , ❚❚ , ❙◄◄ , ►►❙ , ◄◄ , ►► , POSITION MEMORY, TUNER/BAND, D.MIX, CH SELECT/ TEST, SET UP/ MUTING, DISPLAY, GROUP, TV, VCR/ AUX, QUICK REPLAY, SUBTITLE, FL DISPLAY, CH & VOLUME

9.4.2. Cancellation

The lock can be cancelled by the same procedure as used in setting. ("UNLOCK" is displayed on cancellation. Disconnecting the power cable from power outlet does not cancel the lock.)

9.5. Service Precautions

9.5.1. Recovery after the DVD player is repaired

- When the FLASH ROM IC or HDMI module P.C.B. is replaced, carry out the recovery processing to optimize the drive.

  Playback the recovery disk to process the recovery automatically.
- Recovery disc (Product number: RFKZD03R005) [SPG]
- Performing recovery process

1. Load the recovery disc on to the player and run it.
2. Recovery is performed automatically. When it is finished, a message appears on the screen.
3. Remove the recovery disc.
4. Turn off the power.
5. Initialize the player.

9.5.2. Firmware version-up of the DVD player

- The firmware of the DVD player may be updated to improve the quality including operability and playability to the substandard discs.processing to optimize the drive.

  The recovery disc contains the necessary firmware for updated purpose.
- After version-up, recovery processing is executed automatically.
- Part number of the recovery disc for version-up will be noticed when it is supplied.
- Updating firmware

1. Load the recovery disc on to the player and run it.
2. Firmware version of the player is automatically checked. Appropriate message appears whenever necessary.
3. Using remote controller´s cursor key, select whether version updating is to be done or not. (Selection of Yes/No)
4. a. If Yes is selected, version updating is performed.
   b. If No is selected, only recovery is performed.
5. a. When updating is finished, remove the disc according to the message appearing on the screen.
   b. Remove the disc according to the message appearing on the screen.
6. Turn off the power.

Note:

If the AC power supply is shut out during version-up due to a power failure, the version-up is improperly carried out.

In such a case, replace the FLASH ROM IC and carry out the version-up again.

9.5.3. DVD Module Reset

- When after replacing FLASH ROM IC or the HDMI Module P.C.B., FL displays error code " DVD F897". This means the unit is not initialized properly and the following process needs to be carry out.
- Procedures:

1. Press ≧10 on remote control while pressing "STOP" button on main unit. (To enter into initialization)
2. FL display show "INIT"
3. While still pressing "STOP" button on main unit, press "ENTER" on remote control. (To reset the unit)

4. FL will display “RESET” before FL display will change to TOC reading again.
5. Power off unit. Unplug the AC cord.
6. Power on the unit. It should be no problem. If problem persist check on the HDMI module P.C.B. or FLASH ROM IC.

10 Assembling and Disassembling

“ATTENTION SERVICER”

Be careful when disassembling and servicing.

Some chassis components may have sharp edges.

Special Note:

1. **This section describes the disassembly procedures for all the major printed circuit boards and main components.**
2. **Before the disassembly process was carried out, do take special note that all safety precautions are to be carried out. (Ensure that no AC power supply is connected during disassembling.)**
3. **For assembly after operation checks or replacement, reverse the respective procedures. Special reassembly procedures are described only when required.**
4. **The Switch Regulator IC may have high temperature after prolonged use. Use caution when removing the top cabinet and avoid touching heat sinks located in the unit.**
5. **Select items from the following index when checks or replacement are required.**

- Disassembly of Top Cabinet
- Disassembly of DVD Lid (When taking out disc manually)
- Disassembly of Front Panel
- Disassembly of Music Port P.C.B., Mic P.C.B., FL P.C.B. & Top Button P.C.B.
- Disassembly of Mechanism Unit
- Disassembly of DVD Module P.C.B.
- Disassembly of Rear panel
- Disassembly of Relay P.C.B.
- Disassembly of HDMI Module P.C.B.
- Disassembly of Main P.C.B., AC-Inlet P.C.B., Tuner Extent P.C.B. & Voltage Selector P.C.B.
- Disassembly of Digital Amp IC (IC5000/IC5200/IC5300)
- Disassembly of Digital Amp IC (IC5400)
- Disassembly of Regulator IC
- Disassembly of Switch Regulator IC (IC5701)

CAUTION NOTE:

Please use original screw and at correct locations.

10.1. Disassembly Flow Chart

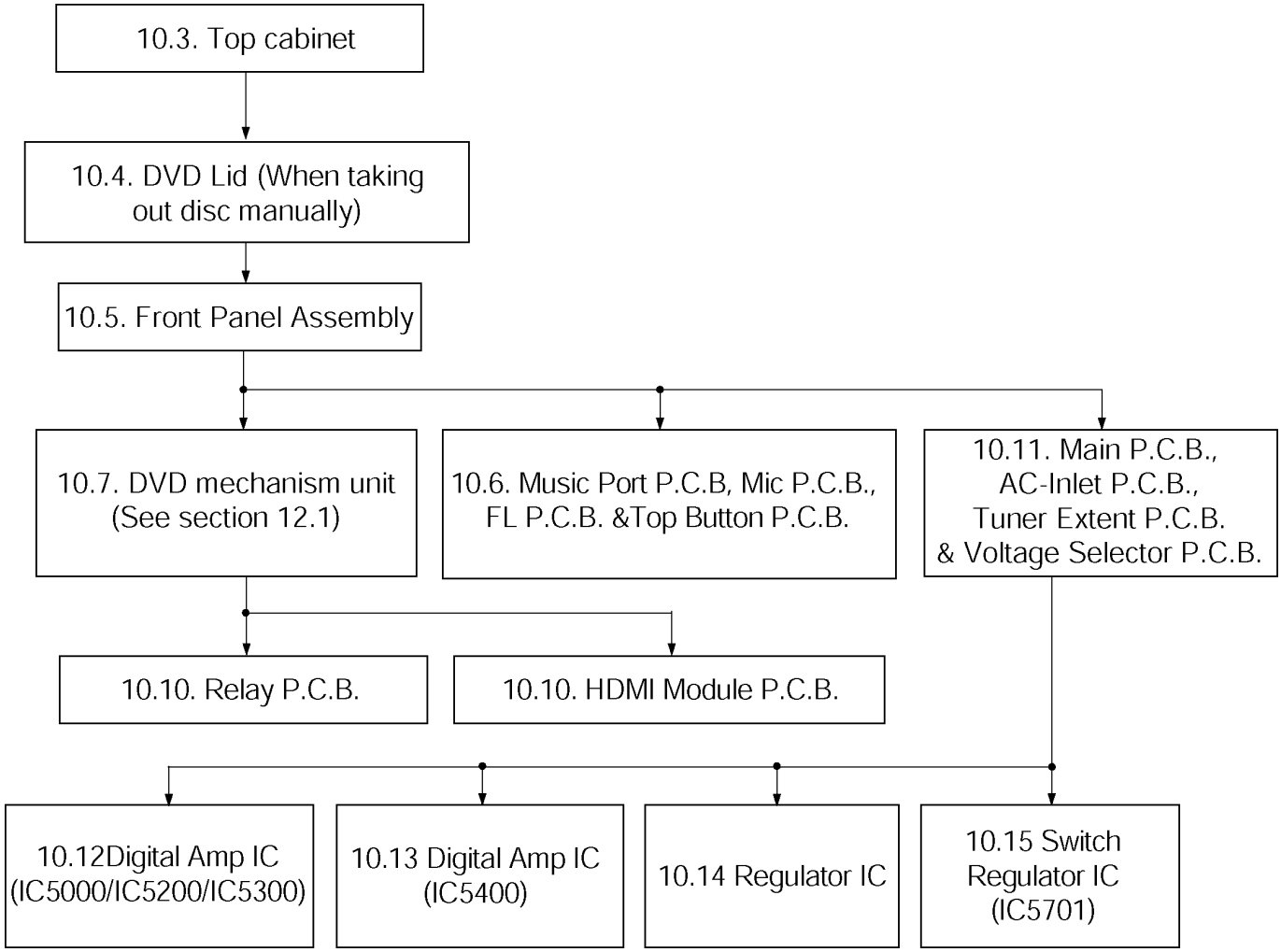

10.2. Main Components and P.C.B. Locations

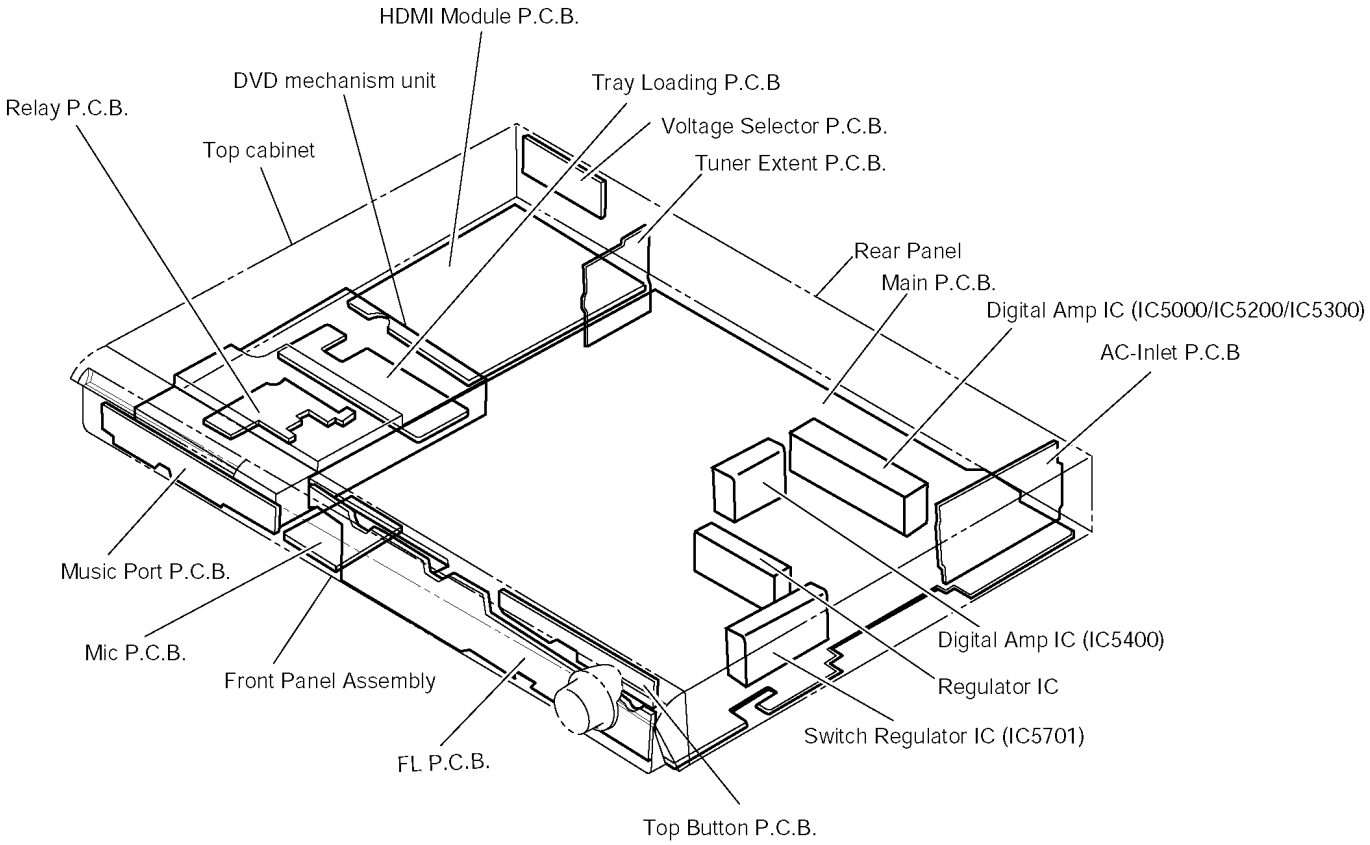

10.3. Disassembly of Top Cabinet

Step 1 Remove 4 screws.

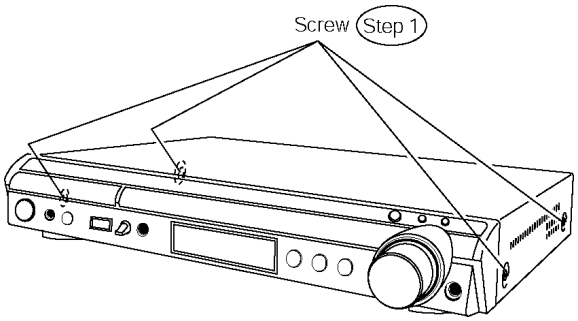

Step 2 Remove 3 screws. (Rear view)

Step 3 Lift up and remove the top cabinet.

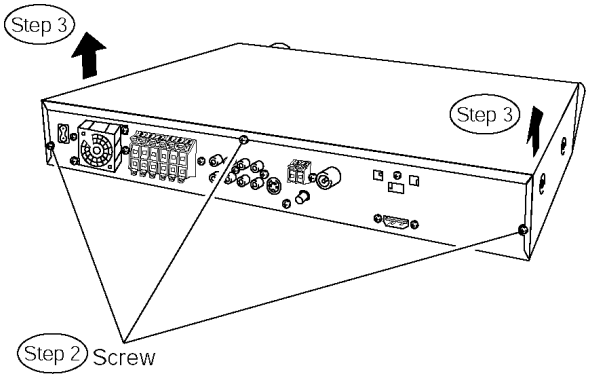

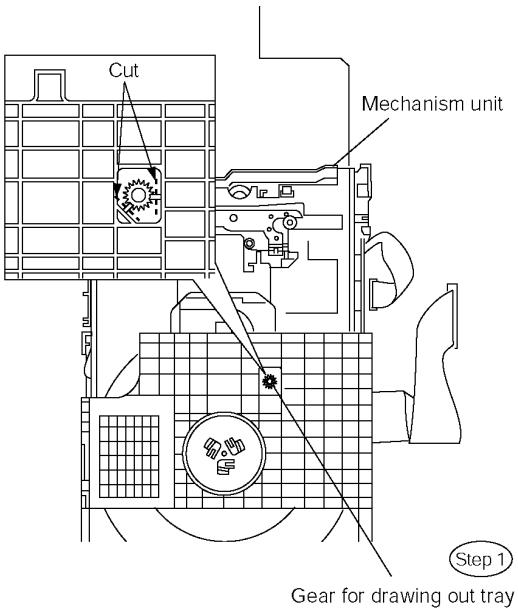

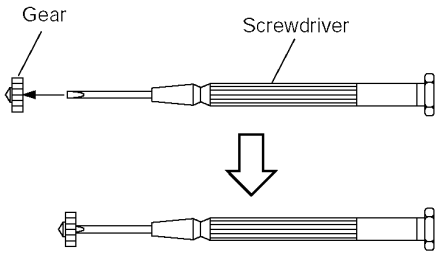

<Gear jig>

10.4. Disassembly of the DVD Lid (When taking out disc manually)

・Follow Item 10.3.

Step 1 Detach the gear for drawing out tray from the mechanism unit. It inserts a screw driver in the gear. (The gear jig)

Step 2 Insert the gear jig into the tray open/ close hole.

Step 3 Turn the gear jig counterclockwise to open the tray.

Note : Do not use force to push the tray backwards as it can damage the mechanism unit.

Step 4 Turn the gear jig clockwise to return tray.

Step 5 Release the tabs and remove DVD lid.

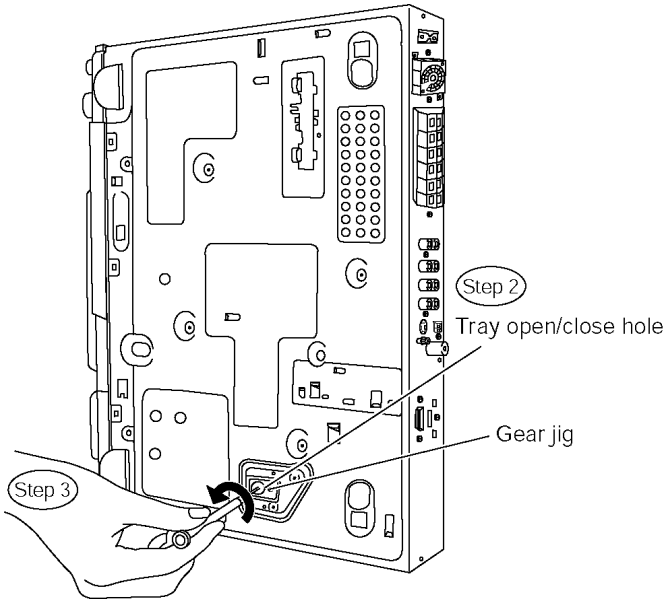

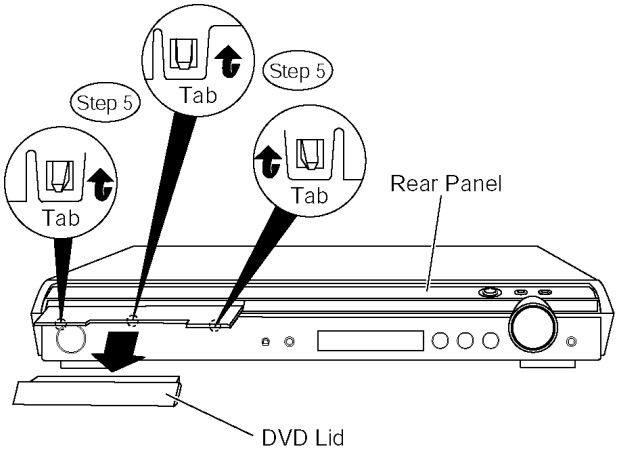

10.5. Disassembly of Front Panel Assembly

・Follow Item 10.3.

Step 1 Remove the DVD lid.

Step 2 Detach FFC cables at connectors. (CN2006, CN2007, CN2017)

Step 3 Remove 1 screw.

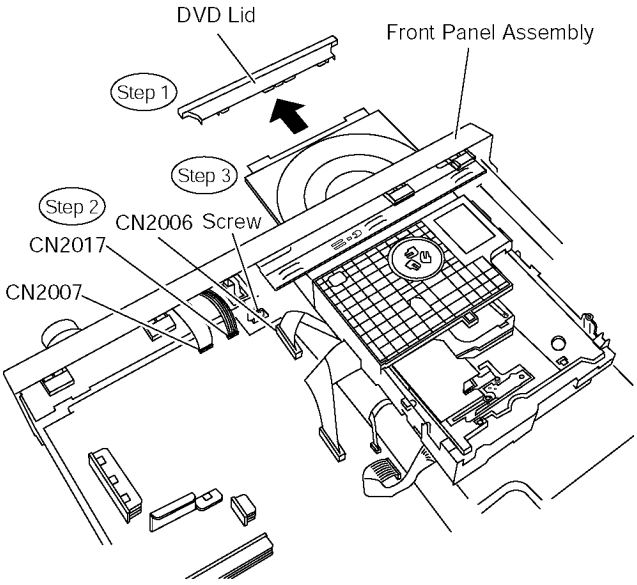

Step 4 Upset and release the tabs.

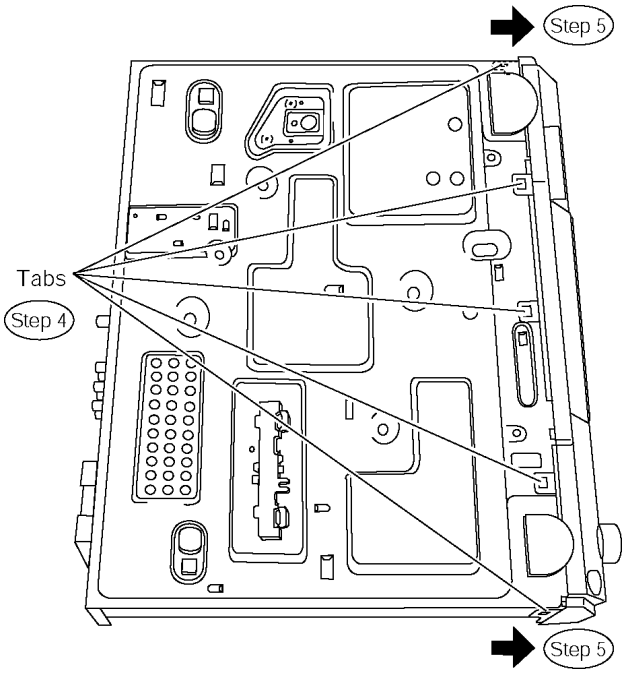

Step 5 Remove the front panel assembly.

Special Note: Avoid placing the set in a position that might cause damage to the jacks when removing the front panel assembly.

10.6. Disassembly of Music Port P.C.B, Mic P.C.B., FL P.C.B. & Top Button P.C.B.

・Follow Item 10.5.

Step 1 Remove the volume knob and mic knob.

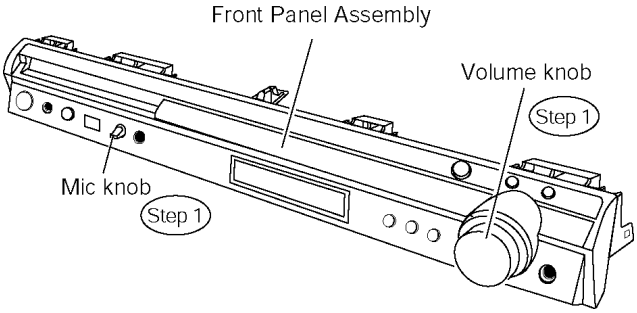

・Disassembly of Music Port P.C.B.

Step 2 Remove 2 screws.

Step 3 Remove the front angle.

Step 4 Remove Music Port P.C.B.

・Disassembly of Top Button P.C.B.

Step 5 Remove 1 screw and the panel angle.

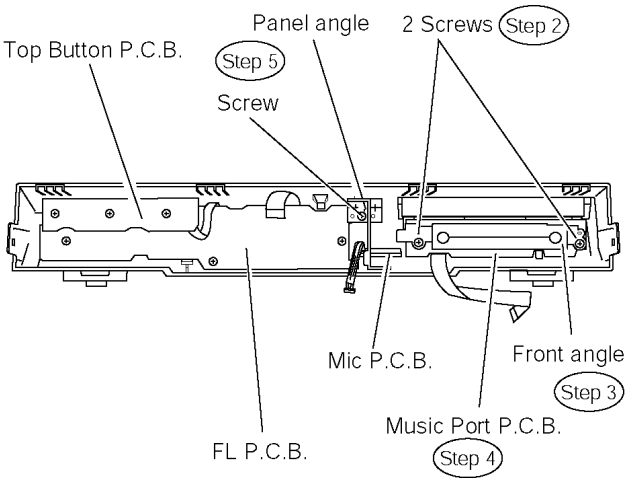

Step 6 Remove 6 screws.

Step 7 Remove FL P.C.B., Top Button P.C.B. & Mic P.C.B.

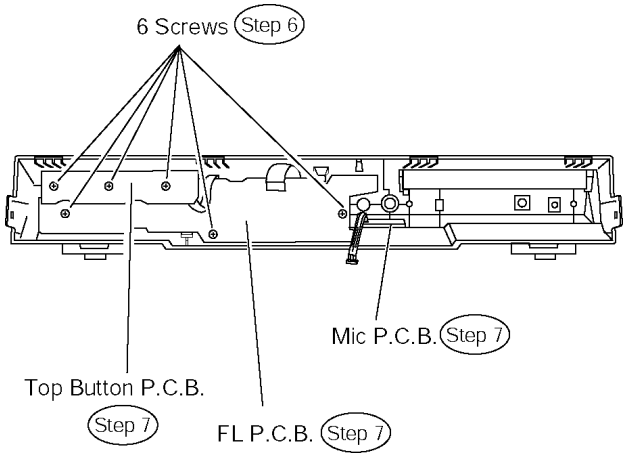

10.7. Disassembly of DVD Mechanism Unit

・Follow Item 10.3.

Step 1 Remove DVD lid.

Step 2 Unscrew the screws.

Step 3 Detach FFC cable at connector (CS901, FP8251, FP8531).

Step 4 Lift up the mechanism unit vertically.

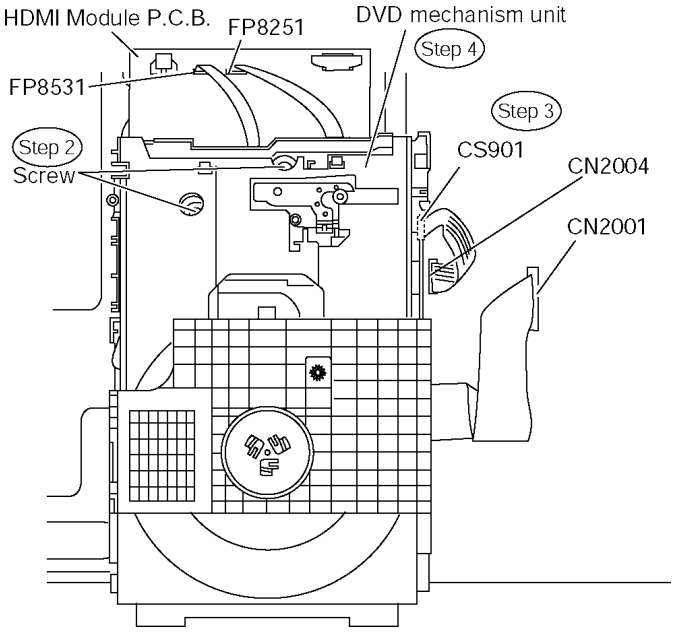

10.8. Disassembly of Relay P.C.B.

・Follow Item 10.7.

Step 1 Remove 4 screws.

Step 2 Detach FFC cables at the connectors. (FP8001, FP8002, FP8003, FP8004)

Step 3 Remove Relay P.C.B.

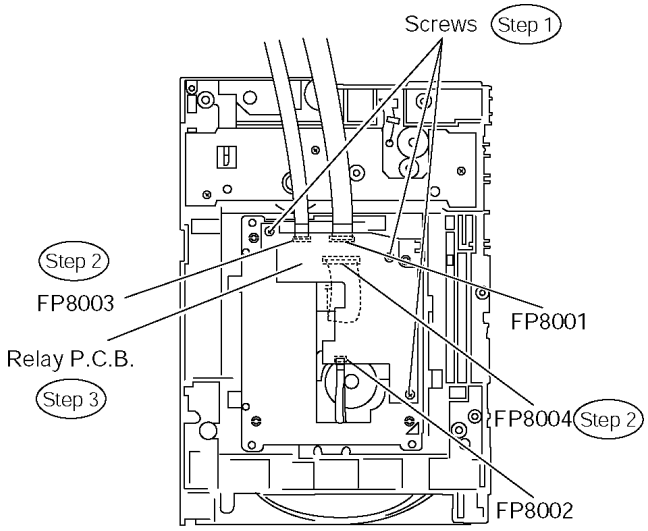

<Mechanism unit bottom>

Caution: Do not use strong or excessive force to avoid damage to FFC cables.

10.9. Disassembly of Rear panel

・Follow Item 10.3.

Step 1 Remove 10 screws.

Step 2 Detach fan unit. (CN5704)

Step 3 Release the tabs.

Step 4 Remove the rear panel.

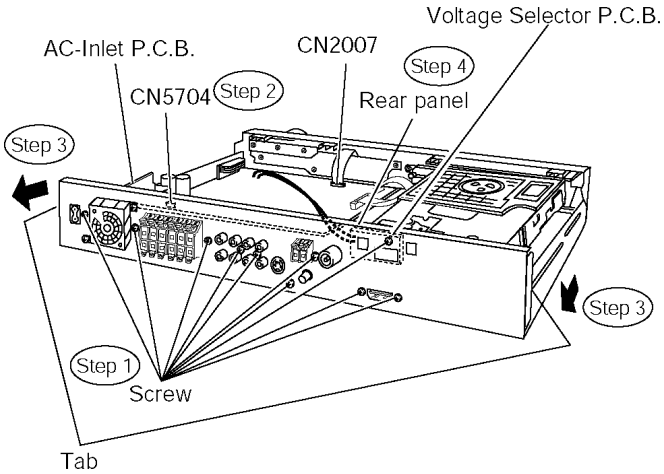

10.10. Disassembly of HDMI Module P.C.B.

- Follow Item 10.3.
- Follow Item 10.7.

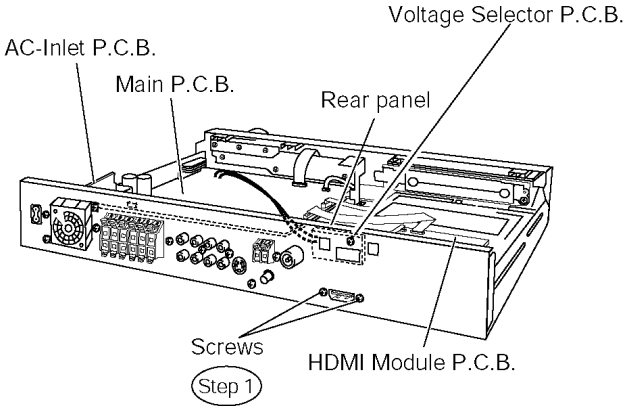

Step 1 Remove 2 screws.

Step 2 Remove 2 screw covers.

Step 3 Remove 1 screw.

Step 4 Detach FFC cables at the connectors.(FP3902, FP8101)

Step 5 Remove HDMI Module P.C.B.

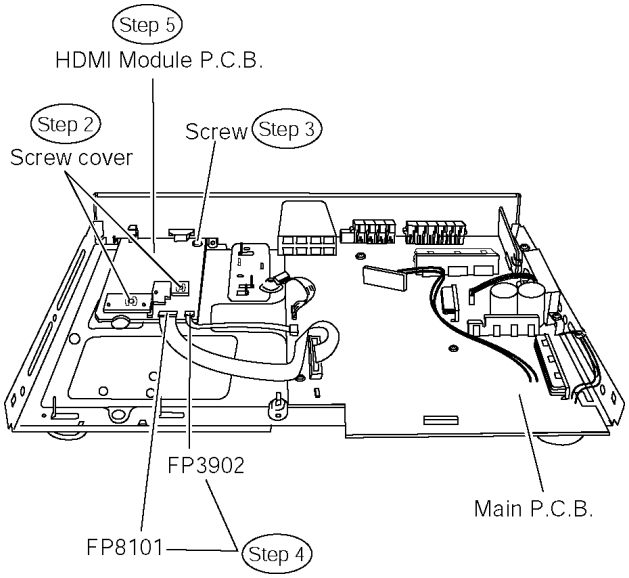

Caution: Do not apply or exert excessive force when detaching the FFC cables.

10.11. Disassembly of Main P.C.B., AC-Inlet P.C.B., Tuner Extent P.C.B. & Voltage Selector P.C.B.

- Follow Item 10.3.
- Follow (Step 1) to (Step 5) of Item 10.5.
- Follow (Step 1) to (Step 4) of Item 10.9.

Step 1 Detach FFC cable. (CN2001)

Step 2 Detach cable. (CS901)

Step 3 Unscrew 2 screws.

Step 4 Detach fan unit. (CN5714)

Step 5 Remove 3 screws.

Step 6 Detach FFC cables from the connectors. (CN2004 & CN2012)

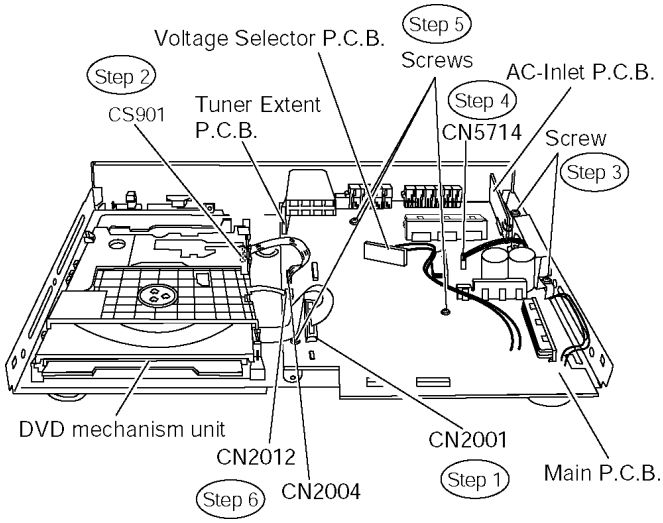

10.12. Disassembly of Digital Amp IC (IC5000/IC5200/IC5300)

- Follow (Step 1) to (Step 2) of Item 10.11.

Step 1 Desolder all the pins of the digital amp IC (IC5000/IC5200/IC5300).

Step 2 Release the claws and remove the heatsink clip.

Step 3 Remove the digital amp IC.

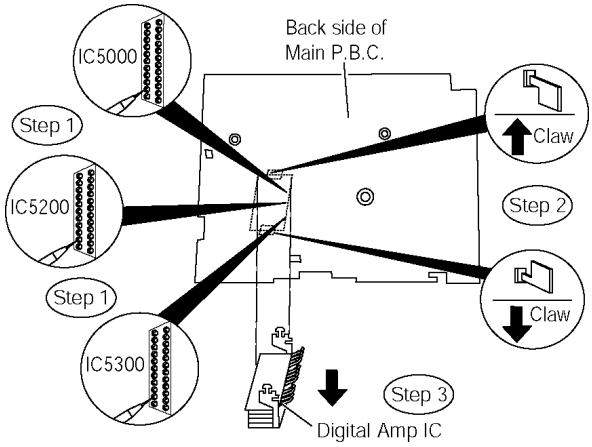

Note: Refer to the diagrams of Main P.C.B. (Section 20.2) for

location of the parts.

10.13. Disassembly of Digital Amp IC (IC5400)

· Follow (Step 1) to (Step 2) of Item 10.11.

Step 1 Desolder all pins of IC5400.

Step 2 Desolder 2 pins of Heat Sink B.

Step 3 Remove the Digital Amp IC (IC5400).

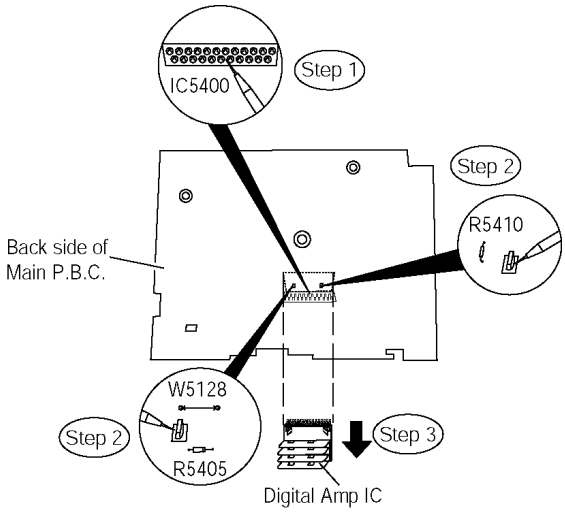

Note: Refer to the diagrams of Main P.C.B. (Section 20.2) for location of the parts.

10.14. Disassembly of Regulator IC

· Follow (Step 1) to (Step 2) of Item 10.11.

Step 1 Desolder all pins of D5711, D5712, D5716, Q5740.

Step 2 Desolder 2 pins of Regulator IC.

Step 3 Remove the Regulator IC.

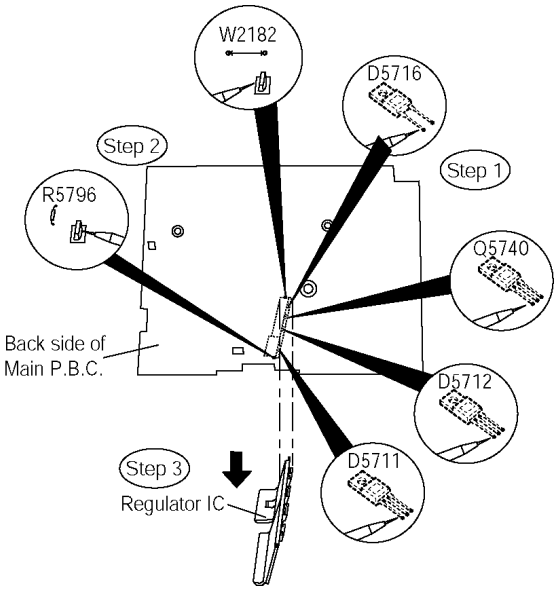

Note: Refer to the diagrams of Main P.C.B. (Section 20.2) for location of the parts.

10.15. Disassembly of Switch Regulator IC (IC5701)

· Follow (Step 1) to (Step 2) of Item 10.11.

Step 1 Desolder all pins of IC5701.

Step 2 Desolder 2 pins of Switch Regulator IC.

Step 3 Remove the Switch Regulator IC.

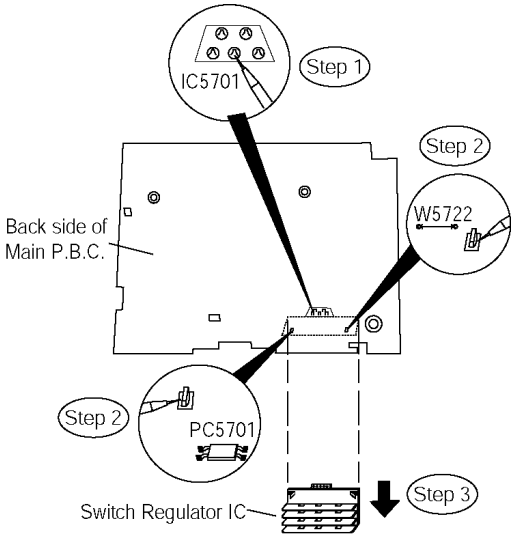

Note: Refer to the diagrams of Main P.C.B. (Section 20.2) for location of the parts.

Caution: Be careful when removing the Switch Regulator IC which has high temperature after prolonged use.

11 Service Position

11.1. Servicing position of the HDMI Module P.C.B.

- Follow Item 10.7.
- Follow (Step 1) to (Step 2) of Item 10.8.
- Follow (Step 1) to (Step 2) of Item 10.9.

Step 1 Connect FFC cables at connectors. (CN2001, CN2004, CN2006, CN2007, CN2012, CN2017, FP3902, FP8101, FP8251 & FP8531)

Step 2 Turn Mechanism unit to vertically position.

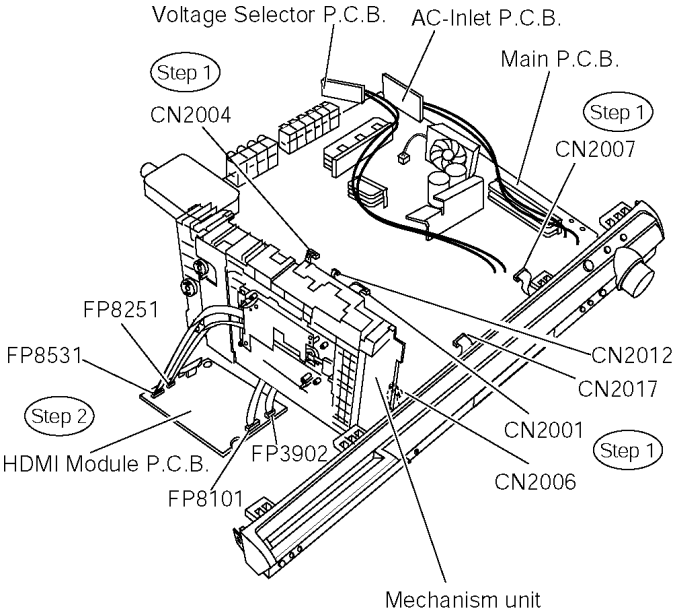

11.2. Servicing position of the Main P.C.B.

- Follow Item 10.7.
- Follow (Step 1) to (Step 2) of Item 10.8.
- Follow (Step 1) to (Step 2) of Item 10.9.

Step 1 Connect FFC cables at connectors. (CN2001, CN2004, CN2006, CN2007, CN2012, CN2017, FP3902, FP8101, FP8251 & FP8531)

Step 2 Turn Main P.C.B to vertically position.

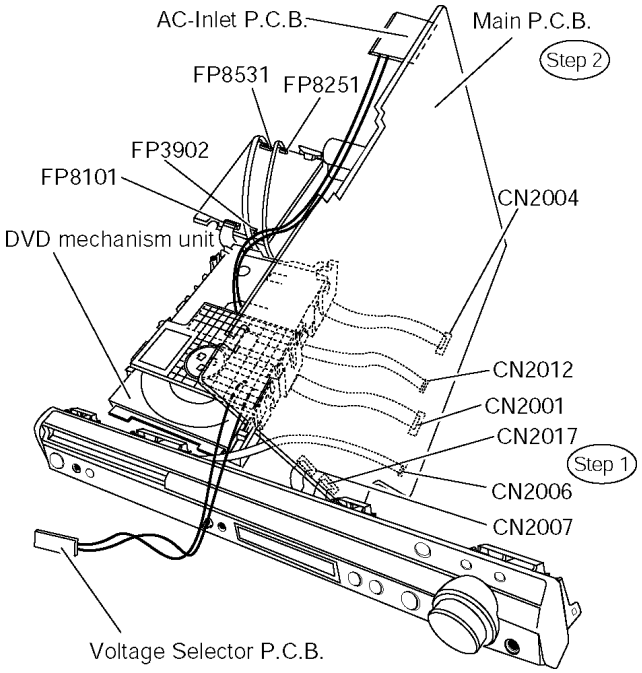

12 Assembly and disassembly of Mechanism Unit

12.1. Disassembly Procedure

Disassembling the DVD mechanism unit (Refer section 10.7)

↓

12.1.1 Traverse unit

↓

12.1.2. Tray unit

↓

12.1.3 Loading section

↓

12.1.4 Tray Loading P.C.B.

↓

12.1.5 Optical pickup unit

12.1.1. Disassembly of Traverse Unit

Step 1 Slide the lever (A) in the arrow direction (to the opposite side) till it stops.

Step 2 Slide the lever (A) further by bending the tab at the right side of the lever A in the right direction. (The right groove opens and the boss becomes seen.)

Step 3 Open the lever (B) to left. (The 2 grooves at the left side open.).

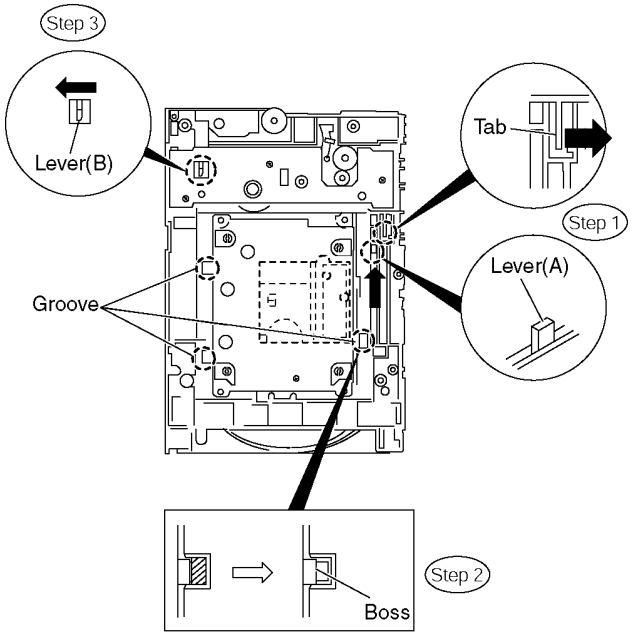

Step 4 Remove the traverse unit.

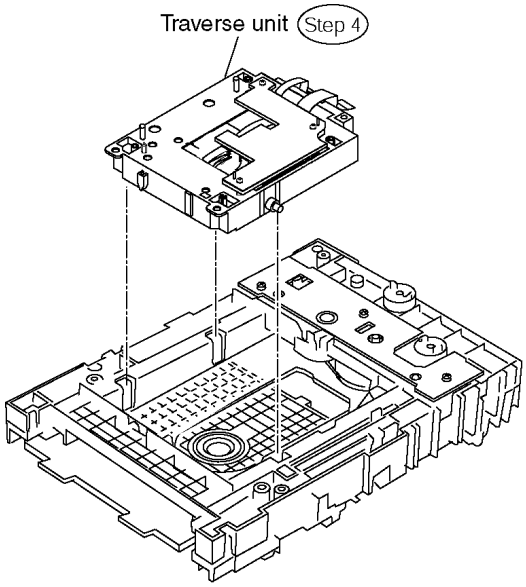

12.1.2. Disassembly of Tray Unit

Step 1 Slide the guide tray unit while pressing the stopper in the arrow direction, and remove the guide tray unit.

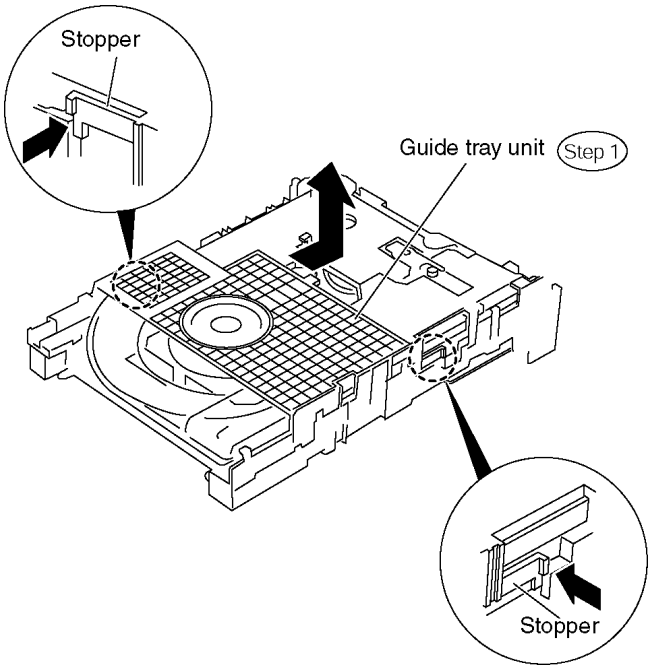

Step 2 Raise the loading unit.

Step 3 Slide the lever in the arrow direction till it stops and pull the tray out.

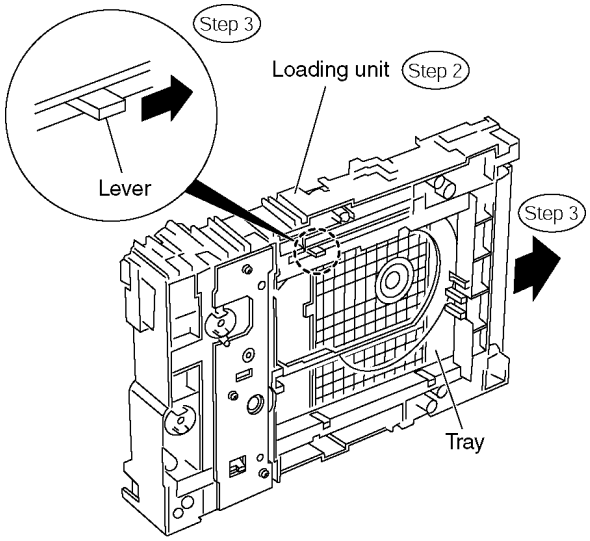

Step 4 Spread the tabs at the both sides and pull the tray out. (The tray slides a little forword and stops.).

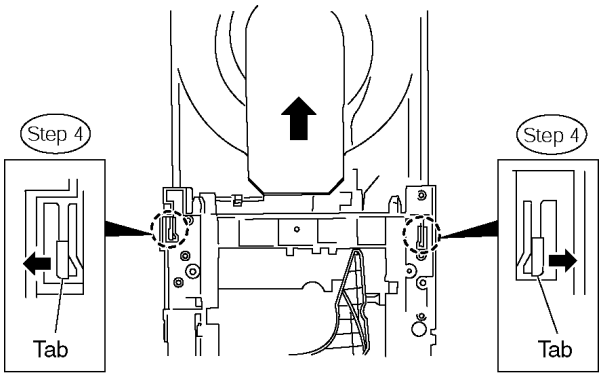

Step 5 Remove the drive arm concave phase from the tray slider and tray.

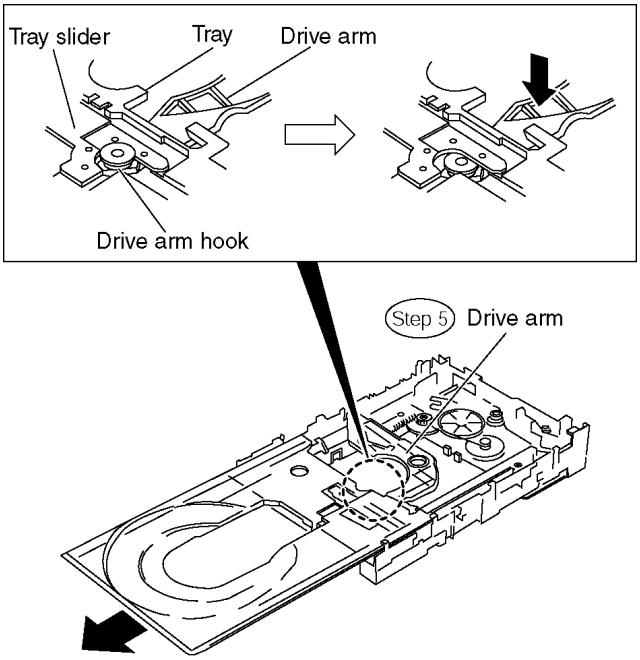

I(Assembling the tray unit)

Step 1 Insert a part of the tray into the unit sliding over the groove on the mechanical chassis unit.

Step 2 Insert the tray to the point before the tab of the mechanical chassis unit.

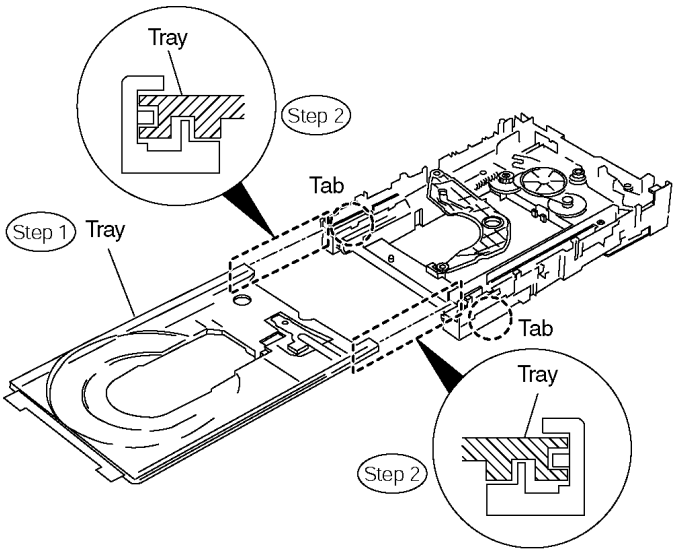

Step 3 Hook the drive arm concave phase over the tray and the tray slider.

Step 4 Press in the tray.

Step 5 Make sure that the tray and the drive arm move smoothly.

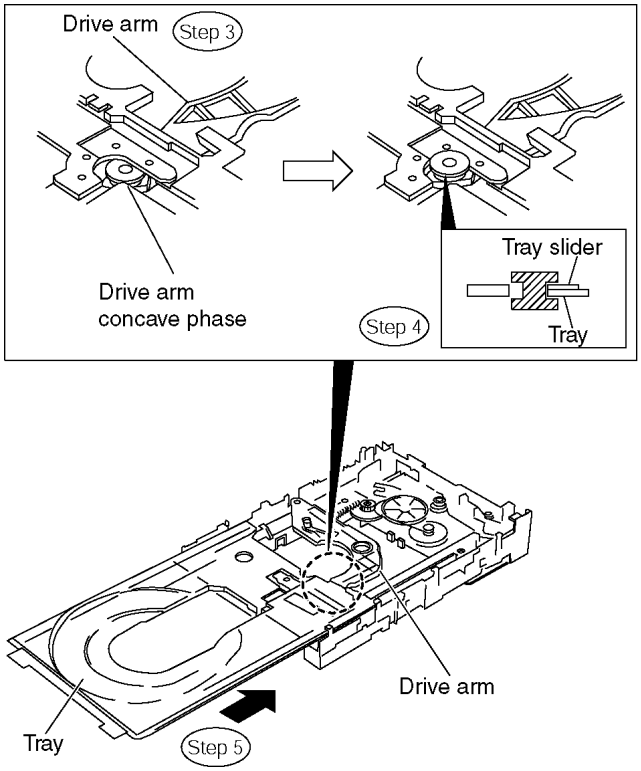

12.1.3. Disassembly of Loading section

Step 1 Spread the tabs at the both sides and push out the drive arm shaft.

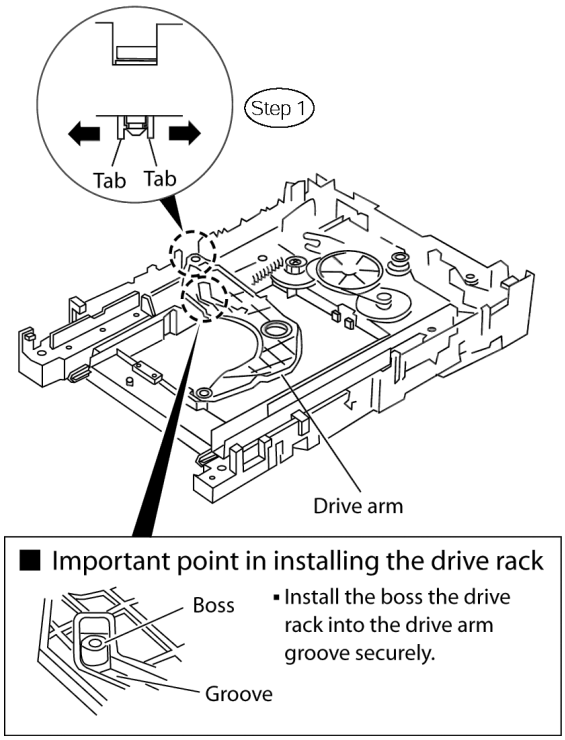

Step 2 Hook the lock lever spring on the lock lever projection part temporarly.

Step 3 Unlock the tab and remove the lock lever.

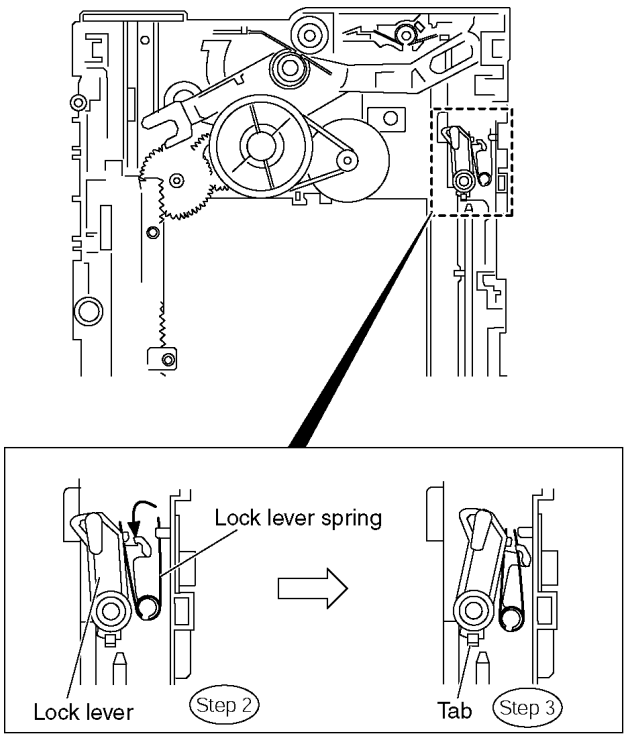

Step 4 Remove the belt.

Step 5 Unlock the tab and remove the pulley.

Step 6 Remove the relay gear.

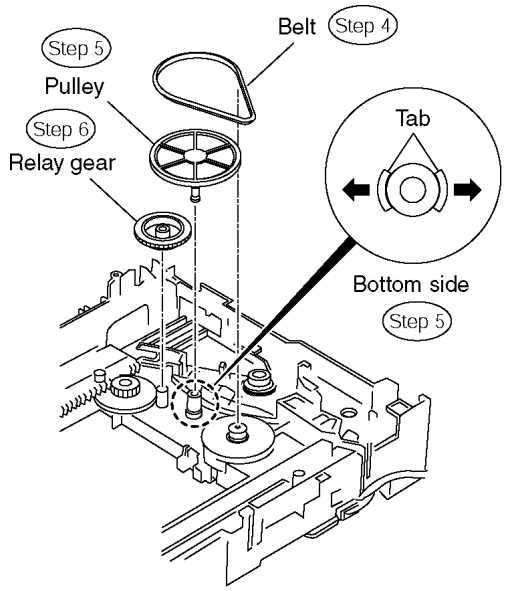

Step 7 Turn the change lever in the arrow direction till it stops.

Step 8 Hook the change lever spring on the change lever project part temporarily.

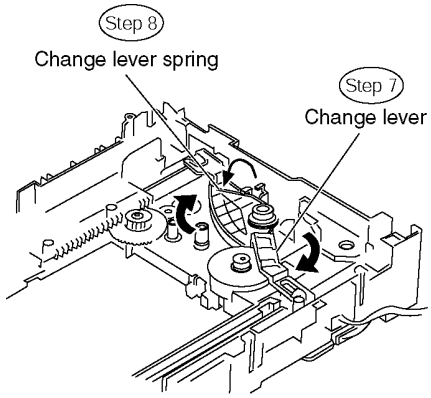

Step 9 Pull the lever (B) in the bottom side to your side and remove the change lever.

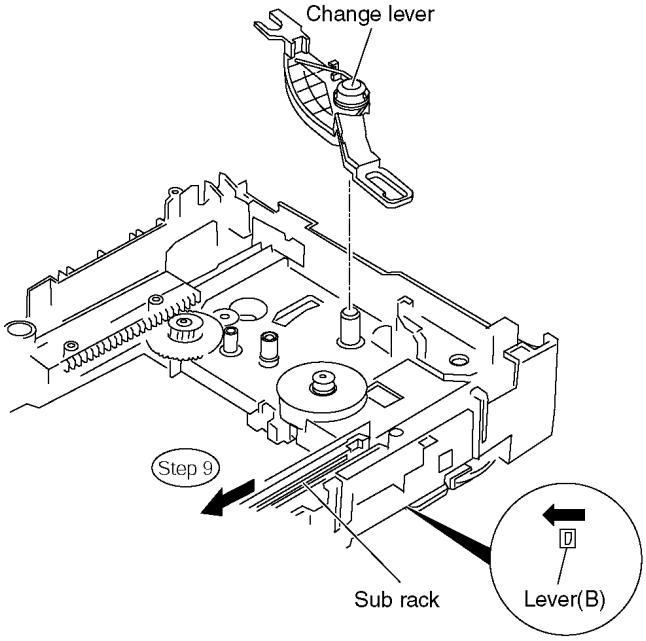

(Bottom side)

Step 10 Remove the drive rack, the sub rack and the drive gear.

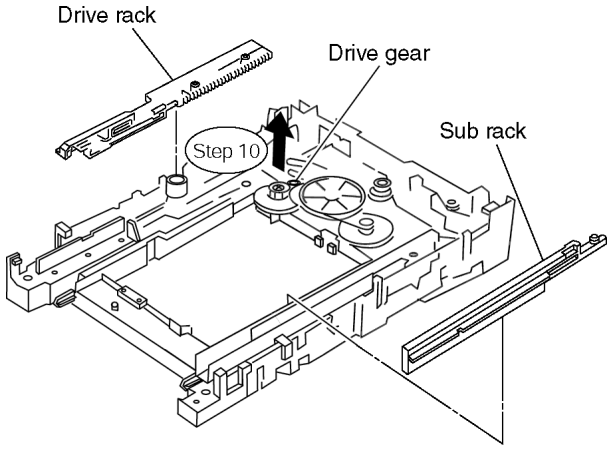

12.1.4. Disassembly of Tray Loading P.C.B.

Step 1 Remove 3 screws

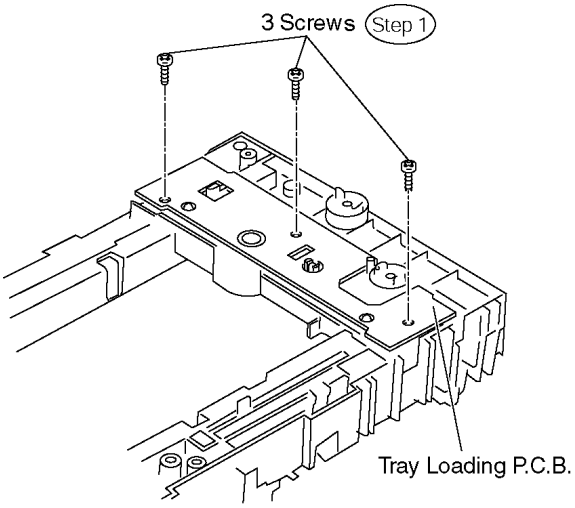

12.1.5. Disassembly of Optical Pickup Unit

Special Note: Anti-static measures are necessary due to handling of OPU unit .

Step 1 Spread the tabs to push in the pin.

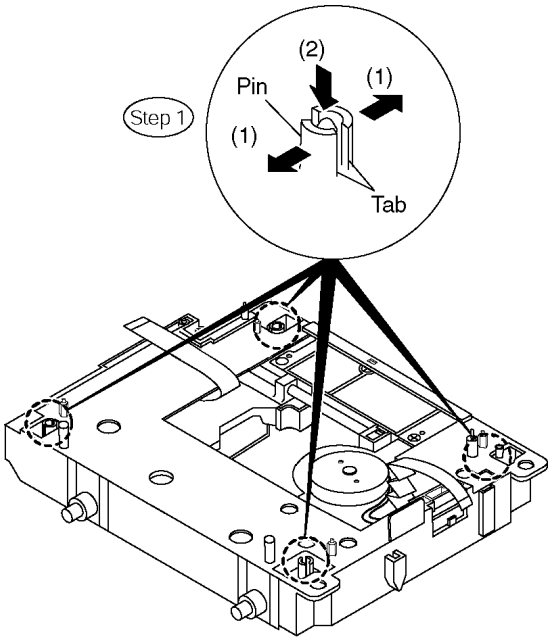

Step 2 Remove 4 pins.

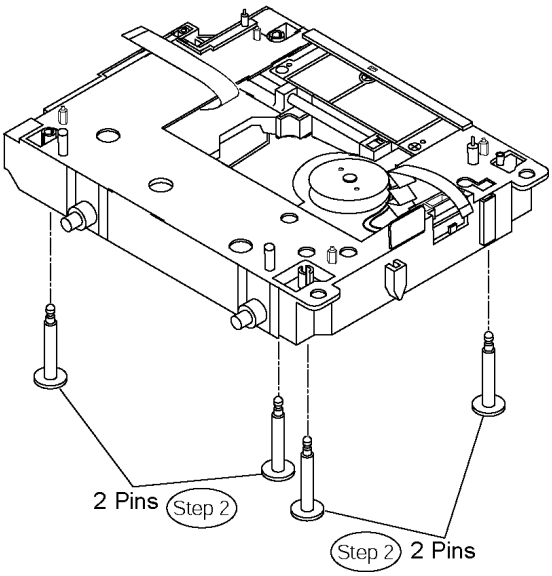

Step 3 Remove the middle chassis.

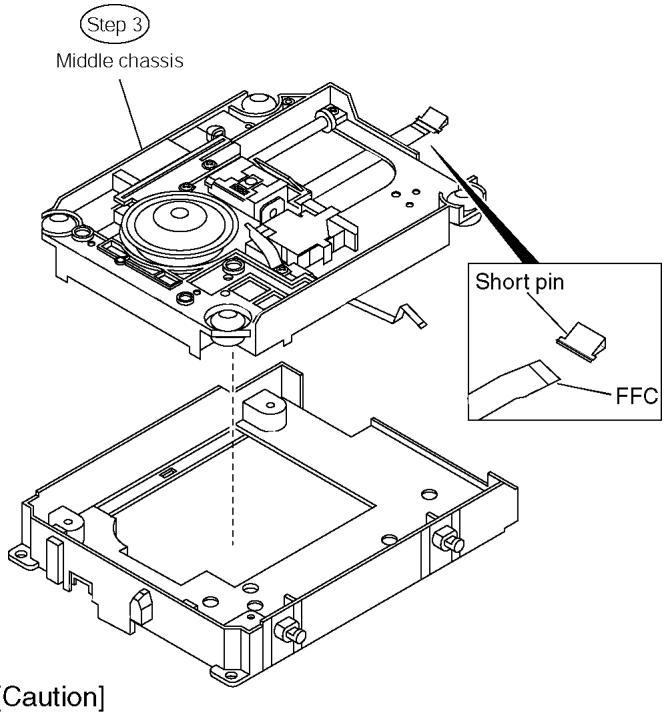

[Caution]
Insert the short pin into the FFC of the optical pickup unit. [See "Caution to be taken in handling the optical pickup unit"]

Step 4 Remove the optical pickup unit in the arrow direction till it stops.

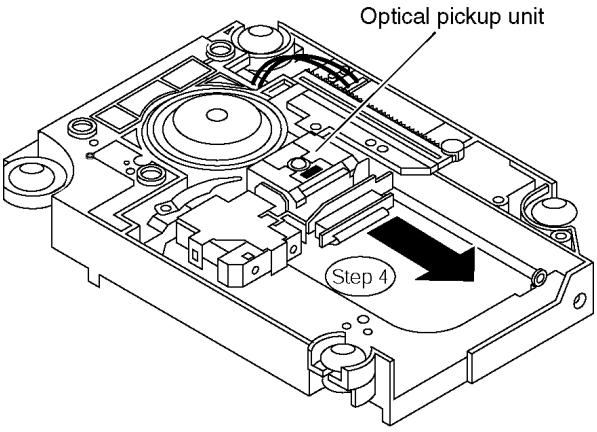

Step 5 Remove 2 screws.

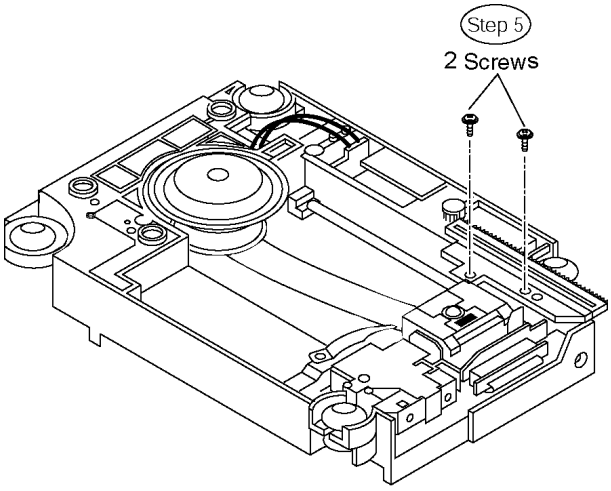

Step 6 Remove the drive rack.

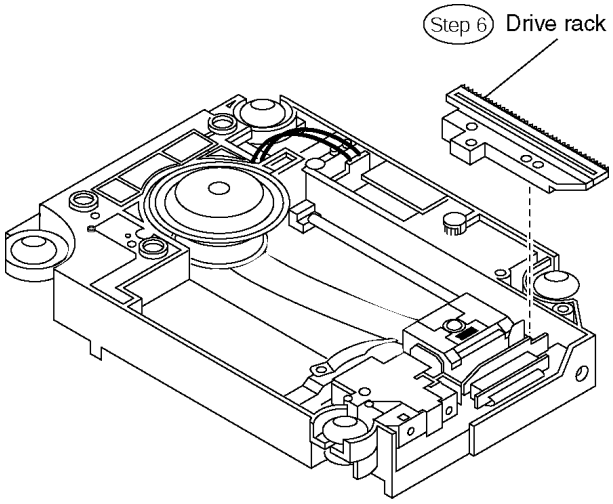

Step 7 Remove 1 screw.

Step 8 Slide the shaft in the arrow direction.

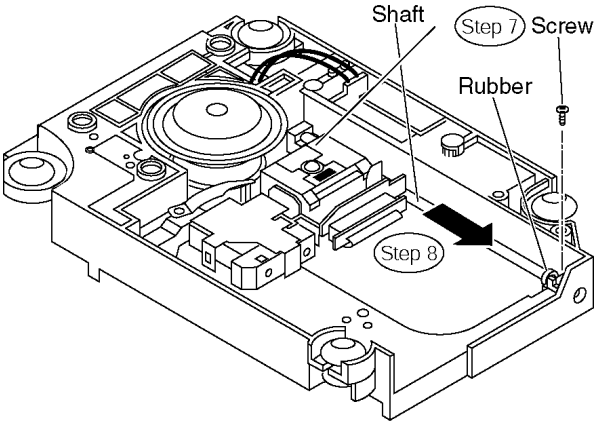

Step 9 Lift the optical pickup unit with the shaft.

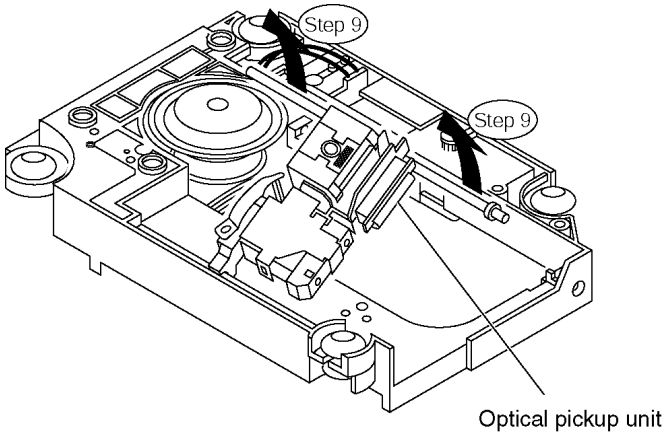

Step 10 Remove the optical pickup unit.

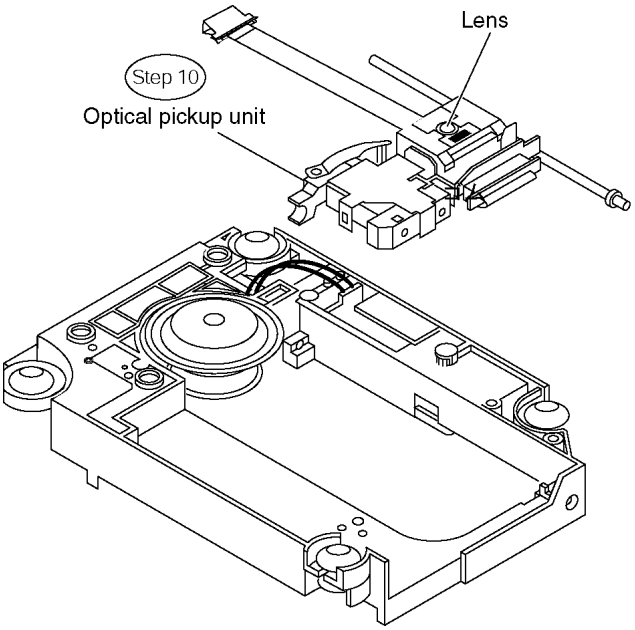

[Caution]

1. Do not give a considerable shock to the optical pickup unit as it has an extremely high-precise structure.
2. Do not touch the lens in the optical pickup unit.

Step 11 Pull the shaft and the rubber out.

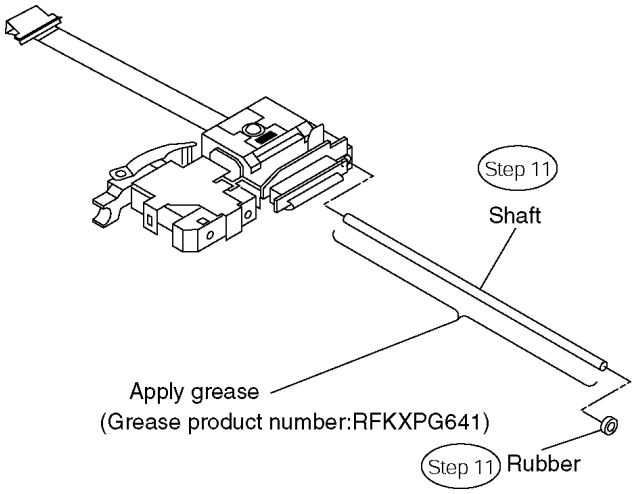

(Assembling the optical pickup unit)

Step 1 Pass the intermediate FPC through the frame hole.

Step 2 Align the guide section of the optical pickup unit with the rail.

Step 3 Install the shaft top to the holder.

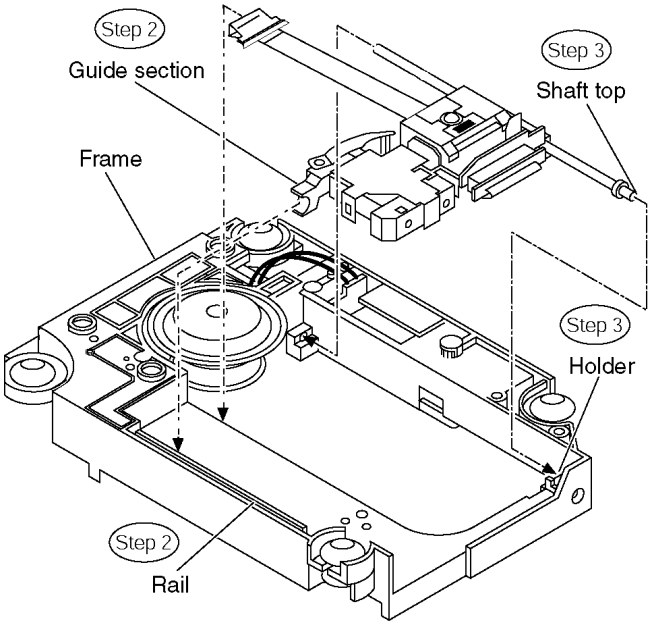

13 Measurements and Adjustments

13.1. Service Tools and Equipment

Application	Name	Number
Tilt adjustment	DVD test disc	DVDT-S20 [SPG]
	TORX screw driver (T6)	Available on sales route. (T6) or RFKZ0185 [SPG]
Others	Grease	RFKXPG641 [SPG]
Confirmation	CD test disc	PVCD-K06 or any other commercially available disc
	VCD test disc	PVCD-K06 or any other commercially available disc
	Recovery disc	RFKZD03R005 [SPG]

13.2. Important points in adjustment

13.2.1. Important points in optical adjustment

・Before starting optical adjustment, be sure to take anti-static measures.

・Optical pickup tilt adjustment is needed after replacement of the following components.

1. Optical pickup unit
2. Spindle motor unit
3. Optical pickup peripheral parts

Notes

Adjustment is generally unnecessary after replacing other parts of the traverse unit. However, make adjustment if there is a noticeable degradation in picture quality. Optical adjustments cannot be made inside the optical pickup. Adjustment is generally unnecessary after replacing the traverse unit.

13.2.2. Important points in electrical adjustment

・Follow the adjustment procedures described in this manual.

13.3. Storing and handling of test discs

・Surface precision is vital for DVD test discs. Be sure to store and handle them carefully.

1. Do not place discs directly onto the workbench, etc., after use.
2. Handle discs carefully in order to maintain their flatness. Place them into their case after use and store them vertically. Store discs in a cool place where they are not exposed to direct sunlight or air from air conditioners.
3. Accurate adjustment will not be possible if the disc is warped when placed on a surface made of glass, etc. If this happens, use a new test disc to make optical adjustments.
4. If adjustment is done using a warped disc, the adjustment will be incorrect and some discs will not be playable.

13.4. Optical adjustment

13.4.1. Optical pickup tilt adjustment

Measurement point	Adjustment point	Mode	Disc
	Tangential adjustment screw Tilt adjustment screw	T01 (inner periphery) play T30 (center periphery) T43 (outer periphery) play	DVDT-S20 [SPG]
Measuring equipment		Adjustment value	
None (Main unit display for servicing is used.)		Adjust to the minimum jitter value.	

13.4.1.1. Adjustment procedure

1. While pressing STOP button on the main unit, press "5" on the remote control unit.
2. Confirm that "J_xxx/yyy_zz" (display1/display2) is shown on the front display.

   For your information:

   "yyy" and "zz" shown to the right have nothing to do with the jitter value. "yyy" is the error counter, while "zz" is the focus drive value.

   Note:

   Jitter value appears on the front display.
3. Play test disc T30 (center periphery).
4. Adjust tangential adjustment screw so that the jitter value is minimized.
5. Play test disc T30 (center periphery).
6. Adjust tilt adjustment screw 1 so that the jitter value is minimized.
7. Play test disc T30 (center periphery).
8. Adjust tilt adjustment screw 2 so that the jitter value is minimized.
9. Repeat adjusting tilt adjustment screws 1 and 2 alternately until the jitter value is minimized.

13.4.1.2. Important points

1. Make tangential adjustment first, and then make tilt adjustment.
2. Repeat adjusting two or three times to find the optimum point.
3. Finish the procedure with tilt adjustment.

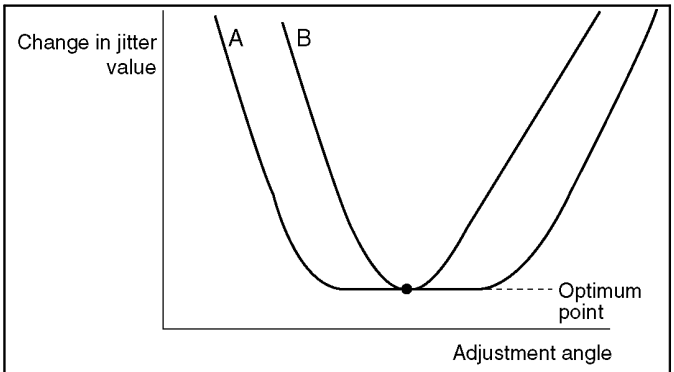

Jitter value depends on the model:
1. If the jitter value changes like B, the optimum point is easy to find.
2. If the jitter value changes like A, set the optimum point near the middle.

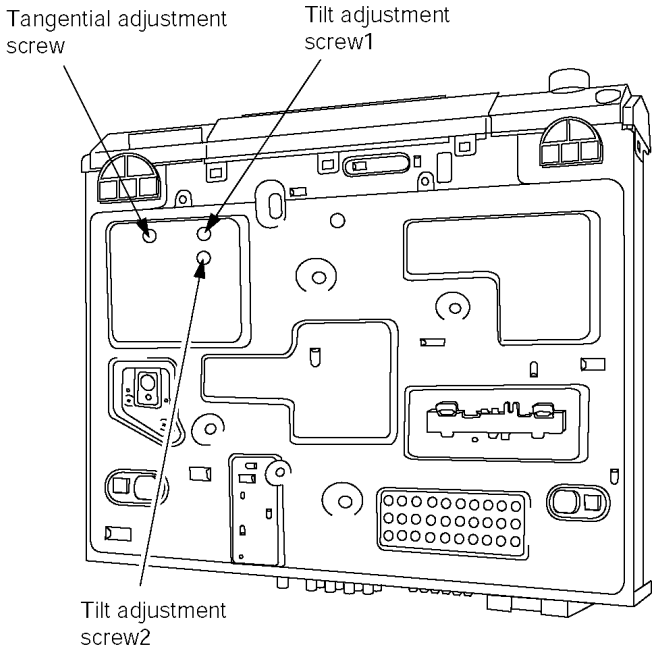

13.4.1.3. Check after adjustment

Play test disc or any other disc to make sure there is no picture degradation in the inner, middle and outer peripheries, and no audio skipping. After adjustment is finished, lock each adjustment screw in position using screw lock.

13.4.1.4. Procedure for screw lock

1. After adjustment, remove top cover, tray, clamper base and traverse unit in this sequence.
2. Lay the traverse unit upside down, and fix adjustment screw with screw lock.
3. After fixing, reassemble traverse unit, clamper base, tray and top cover.

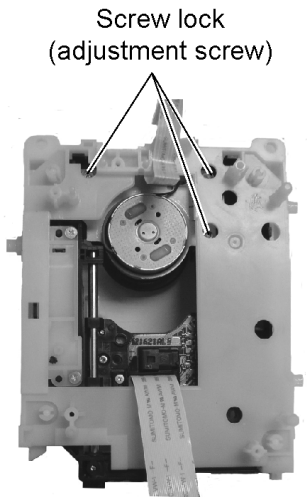

14 Abbreviations

INITIAL/LOGO		ABBREVIATIONS
A	A0~UP	ADDRESS
	ACLK	AUDIO CLOCK
	AD0~UP	ADDRESS BUS
	ADATA	AUDIO PES PACKET DATA
	ALE	ADDRESS LATCH ENABLE
	AMUTE	AUDIO MUTE
	AREQ	AUDIO PES PACKET REQUEST
	ARF	AUDIO RF
	ASI	SERVO AMP INVERTED INPUT
	ASO	SERVO AMP OUTPUT
	ASYNC	AUDIO WORD DISTINCTION SYNC
B	BCK	BIT CLOCK (PCM)
	BCKIN	BIT CLOCK INPUT
	BDO	BLACK DROP OUT
	BLKCK	SUB CODE BLOCK CLOCK
	BOTTOM	CAP. FOR BOTTOM HOLD
	BYP	BYPATH
	BYTCK	BYTE CLOCK
C	CAV	CONSTANT ANGULAR VELOCITY
	CBDO	CAP. BLACK DROP OUT
	CD	COMPACT DISC
	CDSCK	CD SERIAL DATA CLOCK
	CDSRDATA	CD SERIAL DATA
	CDRF	CD RF (EFM) SIGNAL
	CDV	COMPACT DISC-VIDEO
	CHNDATA	CHANNEL DATA
	CKSL	SYSTEM CLOCK SELECT
	CLV	CONSTANT LINEAR VELOCITY
	COFTR	CAP. OFF TRACK
	CPA	CPU ADDRESS
	CPCS	CPU CHIP SELECT
	CPDT	CPU DATA
	CPUADR	CPU ADDRESS LATCH
	CPUADT	CPU ADDRESS DATA BUS
	CPUIRQ	CPU INTERRUPT REQUEST
	CPRD	CPU READ ENABLE
	CPWR	CPU WRITE ENABLE
	CS	CHIP SELECT
	CSYNCIN	COMPOSITE SYNC IN
	CSYNCOUT	COMPOSITE SYNC OUT
D	DACCK	D/A CONVERTER CLOCK
	DEEMP	DEEMPHASIS BIT ON/OFF
	DEMPH	DEEMPHASIS SWITCHING
	DIG0~UP	FL DIGIT OUTPUT
	DIN	DATA INPUT
	DMSRCK	DM SERIAL DATA READ CLOCK
	DMUTE	DIGITAL MUTE CONTROL
	DO	DROP OUT
	DOUT0~UP	DATA OUTPUT
	DRF	DATA SLICE RF (BIAS)
	DRPOUT	DROP OUT SIGNAL
	DREQ	DATA REQUEST
	DRESP	DATA RESPONSE
	DSC	DIGITAL SERVO CONTROLLER
	DSLF	DATA SLICE LOOP FILTER
	DVD	DIGITAL VIDEO DISC

INITIAL/LOGO		ABBREVIATIONS
E	EC	ERROR TORQUE CONTROL
	ECR	ERROR TORQUE CONTROL REFERENCE
	ENCSEL	ENCODER SELECT
	ETMCLK	EXTERNAL M CLOCK (81MHz/40.5MHz)
	ETSCLK	EXTERNAL S CLOCK (54MHz)
F	FBAL	FOCUS BALANCE
	FCLK	FRAME CLOCK
	FE	FOCUS ERROR
	FFI	FOCUS ERROR AMP INVERTED INPUT
	FEO	FOCUS ERROR AMP OUTPUT
	FG	FREQUENCY GENERATOR
	FSC	FREQUENCY SUB CARRIER
	FSCK	FS (384 OVER SAMPLING) CLOCK
G	GND	COMMON GROUNDING (EARTH)
H	HA0~UP	HOST ADDRESS
	HD0~UP	HOST DATA
	HINT	HOST INTERRUPT
	HRXW	HOST READ/WRITE
I	IECOUT	IEC958 FORMAT DATA OUTPUT
	IPFRAG	INTERPOLATION FLAG
	IREF	I (CURRENT) REFERENCE
	ISEL	INTERFACE MODE SELECT
L	LDON	LASER DIODE CONTROL
	LPC	LASER POWER CONTROL
	LRCK	L CH/R CH DISTINCTION CLOCK
M	MA0~UP	MEMORY ADDRESS
	MCK	MEMORY CLOCK
	MCKI	MEMORY CLOCK INPUT
	MCLK	MEMORY SERIAL COMMAND CLOCK
	MDATA	MEMORY SERIAL COMMAND DATA
	MDQ0~UP	MEMORY DATA INPUT/OUTPUT
	MDQM	MEMORY DATA I/O MASK
	MLD	MEMORY SERIAL COMMAND LOAD
	MPEG	MOVING PICTURE EXPERTS GROUP
O	ODC	OPTICAL DISC CONTROLLER
	OFTR	OFF TRACKING
	OSCI	OSCILLATOR INPUT
	OSCO	OSCILLATOR OUTPUT
	OSD	ON SCREEN DISPLAY
P	P1~UP	PORT
	PCD	CD TRACKING PHASE DIFFERENCE
	PCK	PLL CLOCK
	PDVD	DVD TRACKING PHASE DIFFERENCE
	PEAK	CAP. FOR PEAK HOLD
	PLLCLK	CHANNEL PLL CLOCK
	PLLOK	PLL LOCK
	PWMCTL	PWM OUTPUT CONTROL
	PWMDA	PULSE WAVE MOTOR DRIVE A
	PWMOA, B	PULSE WAVE MOTOR OUT A, B

INITIAL/LOGO		ABBREVIATIONS
R	RE	READ ENABLE
	RFENV	RF ENVELOPE
	RFO	RF PHASE DIFFERENCE OUTPUT
	RS	(CD-ROM) REGISTER SELECT
	RSEL	RF POLARITY SELECT
	RST	RESET
	RSV	RESERVE
S	SBI0, 1	SERIAL DATA INPUT
	SBO0	SERIAL DATA OUTPUT
	SBT0, 1	SERIAL CLOCK
	SCK	SERIAL DATA CLOCK
	SCKR	AUDIO SERIAL CLOCK RECEIVER
	SCL	SERIAL CLOCK
	SCLK	SERIAL CLOCK
	SDA	SERIAL DATA
	SEG0~UP	FL SEGMENT OUTPUT
	SELCLK	SELECT CLOCK
	SEN	SERIAL PORT ENABLE
	SIN1, 2	SERIAL DATA IN
	SOUT1, 2	SERIAL DATA OUT
	SPDI	SERIAL PORT DATA INPUT
	SPDO	SERIAL PORT DATA OUTPUT
	SPEN	SERIAL PORT R/W ENABLE
	SPRCLK	SERIAL PORT READ CLOCK
	SPWCLK	SERIAL PORT WRITE CLOCK
	SQCK	SUB CODE Q CLOCK
	SQCX	SUB CODE Q DATA READ CLOCK
	SRDATA	SERIAL DATA
	SRMADR	SRAM ADDRESS BUS
	SRMDT0~7	SRAM DATA BUS 0~7
	SS	START/STOP
	STAT	STATUS
	STCLK	STREAM DATA CLOCK
	STD0~UP	STREAM DATA
	STENABLE	STREAM DATA INPUT ENABLE
	STSEL	STREAM DATA POLARITY SELECT
	STVALID	STREAM DATA VALIDITY
	SUBC	SUB CODE SERIAL
	SBCK	SUB CODE CLOCK
	SUBQ	SUB CODE Q DATA
	SYSCLK	SYSTEM CLOCK
T	TE	TRACKING ERROR
	TIBAL	BALANCE CONTROL
	TID	BALANCE OUTPUT 1
	TIN	BALANCE INPUT
	TIP	BALANCE INPUT
	TIS	BALANCE OUTPUT 2
	TPSN	OP AMP INPUT
	TPSO	OP AMP OUTPUT
	TPSP	OP AMP INVERTED INPUT
	TRCRS	TRACK CROSS SIGNAL
	TRON	TRACKING ON
	TRSON	TRAVERSE SERVO ON

INITIAL/LOGO		ABBREVIATIONS
V	VBLANK	V BLANKING
	VCC	COLLECTOR POWER SUPPLY VOLTAGE
	VCDCONT	VIDEO CD CONTROL (TRACKING BALANCE)
	VDD	DRAIN POWER SUPPLY VOLTAGE
	VFB	VIDEO FEED BACK
	VREF	VOLTAGE REFERENCE
	VSS	SOURCE POWER SUPPLY VOLTAGE
W	WAIT	BUS CYCLE WAIT
	WDCK	WORD CLOCK
	WEH	WRITE ENABLE HIGH
	WSR	WORD SELECT RECEIVER
X	X	X´ TAL
	XALE	X ADDRESS LATCH ENABLE
	XAREQ	X AUDIO DATA REQUEST
	XCDROM	X CD ROM CHIP SELECT
	XCS	X CHIP SELECT
	XCSYNC	X COMPOSITE SYNC
	XDS	X DATA STROBE
	XHSYNCO	X HORIZONTAL SYNC OUTPUT
	XHINT	XH INTERRUPT REQUEST
	XI	X´ TAL OSCILLATOR INPUT
	XINT	X INTERRUPT
	XMW	X MEMORY WRITE ENABLE
	XO	X´ TAL OSCILLATOR OUTPUT
	XRE	X READ ENABLE
	XSRMCE	X SRAM CHIP ENABLE
	XSRMOE	X SRAM OUTPUT ENABLE
	XSRMWE	X SRAM WRITE ENABLE
	XVCS	X V-DEC CHIP SELECT
	XVDS	X V-DEC CONTROL BUS STROBE
	XVSYNCO	X VERTICAL SYNC OUTPUT

15 Voltage and Waveform Chart

15.1. HDMI Module P.C.B.

Ref No.	IC3701																			
MODE	1	2	3	4	5	6	7	8	9	10	11	12	13	14	15	16	17	18	19	20
CD PLAY	0	0.1	0.1	0.1	0.1	0.1	0.1	3.4	0.1	3.4	0.3	0.1	0.1	3.3	3.2	0.1	0.1	3.4	3.4	1.1
Ref No.	IC3701																			
MODE	21	22	23	24	25	26	27	28	29	30	31	32	33	34	35	36	37	38	39	40
CD PLAY	0.3	0.1	0	0.1	0.1	0	3.4	4.6	0.1	0.1	1.8	1.7	0.1	0.1	0.1	0.1	0.1	0.1	0	0
Ref No.	IC3701																			
MODE	41	42	43	44	45	46	47	48	49	50	51	52	53	54	55	56	57	58	59	60
CD PLAY	0.1	0.1	3.4	-	0.1	3.4	1.6	0.1	3.4	3.4	1.6	3.4	3.4	1.4	3.4	0.1	0.1	0.3	0.1	3.4
Ref No.	IC3701																			
MODE	61	62	63	64	65	66	67	68	69	70	71	72	73	74	75	76	77	78	79	80
CD PLAY	3.4	1.3	0.2	0.2	1.5	0.1	3.4	1.6	1.5	0.1	0.1	3.4	3.4	3.4	1.6	0.1	0.1	3.4	3.4	0.1
Ref No.	IC3701																			
MODE	81	82	83	84	85	86	87	88	89	90	91	92	93	94	95	96	97	98	99	100
CD PLAY	0.1	0.1	0.1	0.1	0.1	3.4	3.4	1.5	1.5	1.5	0.1	0.2	1.6	0.1	0.1	3.4	3.4	1.5	3.4	3.4
Ref No.	IC3701																			
MODE	101	102	103	104	105	106	107	108	109	110	111	112	113	114	115	116	117	118	119	120
CD PLAY	0.1	0.1	0.1	3.3	3.4	1.5	0.1	0.1	0.1	1.5	3.4	1.4	1.5	3.4	3.4	1.5	1.5	0.1	0.1	1.5
Ref No.	IC3701																			
MODE	121	122	123	124	125	126	127	128	129	130	131	132	133	134	135	136	137	138	139	140
CD PLAY	3.4	0.1	0.1	0.1	0.1	0.1	0.1	0.1	0.1	0.1	0.1	0.2	0.2	0.1	0.1	0.1	3.4	0.1	0.1	0.1
Ref No.	IC3701																			
MODE	141	142	143	144	145	146	147	148	149	150	151	152	153	154	155	156	157	158	159	160
CD PLAY	0.1	0.1	0.1	0.1	0.1	0.1	0.1	0.1	0.1	3.4	3.4	1.6	0.9	0.8	1.6	0.1	0.1	1.4	1.6	1.9
Ref No.	IC3701																			
MODE	161	162	163	164																
CD PLAY	1.6	0.2	0.1	0.1																
Ref No.	IC3782																			
MODE	1	2	3	4	5	6	7	8												
CD PLAY	1.9	-	1.3	0.1	2.5	-	-	3.1												
Ref No.	IC3901																			
MODE	1	2	3	4	5	6	7	8	9	10	11	12	13	14	15	16	17	18	19	20
CD PLAY	3.1	3.2	0.1	1.9	1.7	1.7	0.1	0.1	0.1	0.1	1.7	1.7	3.4	0.1	0.1	1.9	3.4	0.1	3.4	3.4
Ref No.	IC3901																			
MODE	21	22	23	24	25	26	27	28	29	30	31	32	33	34	35	36	37	38	39	40
CD PLAY	0.1	0.1	3.4	3.4	0.1	0.4	3.4	3.4	1.6	0.1	0.1	1.4	1.4	3.4	1.8	0.1	3.4	3.4	0.1	0.1
Ref No.	IC3901																			
MODE	41	42	43	44	45	46	47	48	49	50	51	52	53	54	55	56	57	58	59	60
CD PLAY	0.1	0.1	3.4	3.4	1.9	0.1	0.1	3.4	2.6	0.1	0.1	0.1	0.1	0.1	0.1	0.1	0.1	0.1	1.8	0.1
Ref No.	IC3901																			
MODE	61	62	63	64	65	66	67	68	69	70	71	72	73	74	75	76	77	78	79	80
CD PLAY	0.1	2.6	0.1	0.1	0.1	1.8	0.1	0.1	0.1	0.1	3.4	0.1	0.1	1.9	0.1	0.1	0.1	0.1	0.1	0.1
Ref No.	IC3931																			
MODE	1	2	3	4	5															
CD PLAY	3.3	0.1	0.1	0.1	3.4															
Ref No.	IC3952																			
MODE	1	2	3	4	5															
CD PLAY	8.7	0.1	1.2	5.1	9.1															
Ref No.	IC8001																			
MODE	1	2	3	4	5	6	7	8	9	10	11	12	13	14	15	16	17	18	19	20
CD PLAY	0.1	0.1	3.4	0.1	0.1	0.1	0.1	3.4	0.1	0.1	0.1	0.1	0.1	0.1	0.1	0.1	3.4	2.6	2.6	0.1
Ref No.	IC8001																			
MODE	21	22	23	24	25	26	27	28	29	30	31	32	33	34	35	36	37	38	39	40
CD PLAY	-	1.3	1.1	1.2	1.6	1.1	1.5	1.3	1.2	2.5	0.1	1.3	1.0	0.1	3.4	3.3	1.3	1.9	1.1	1.7
Ref No.	IC8001																			
MODE	41	42	43	44	45	46	47	48	49	50	51	52	53	54	55	56	57	58	59	60
CD PLAY	1.3	0.7	1.2	0.1	1.3	1.3	1.3	1.5	1.5	2.2	1.3	0.1	-	-	3.4	1.1	2.0	2.2	1.9	1.1
Ref No.	IC8001																			
MODE	61	62	63	64	65	66	67	68	69	70	71	72	73	74	75	76	77	78	79	80
CD PLAY	2.2	2.0	2.4	2.7	0.1	3.4	3.4	0.1	3.4	0.1	0.1	0.1	0.1	0.1	0.1	0.1	0.1	0.1	0.1	0.1
Ref No.	IC8001																			
MODE	81	82	83	84	85	86	87	88	89	90	91	92	93	94	95	96	97	98	99	100
CD PLAY	0.1	0.1	1.3	3.3	0.1	0.1	3.4	3.4	3.4	2.0	1.6	0.1	3.4	0.1	0.1	0.1	0.1	0.1	0.1	0.1
Ref No.	IC8001																			
MODE	101	102	103	104	105	106	107	108	109	110	111	112	113	114	115	116	117	118	119	120
CD PLAY	0.1	3.3	1.0	0.1	2.4	1.9	0.3	0.1	1.8	3.3	3.3	1.3	1.9	1.9	1.9	1.7	1.7	1.7	1.7	2.0
Ref No.	IC8001																			
MODE	121	122	123	124	125	126	127	128	129	130	131	132	133	134	135	136	137	138	139	140
CD PLAY	1.5	0.1	0.5	0.1	0.1	1.9	2.3	1.7	2.6	2.6	2.7	2.6	2.7	2.7	2.5	2.6	2.5	2.5	1.8	2.0
Ref No.	IC8001																			
MODE	141	142	143	144	145	146	147	148	149	150	151	152	153	154	155	156	157	158	159	160
CD PLAY	1.7	1.7	0.1	1.7	1.7	3.4	0.9	0.9	0.4	3.4	2.0	1.0	1.0	2.0	0	0.4	3.3	3.4	0	3.4
Ref No.	IC8001																			
MODE	161	162	163	164	165	166	167	168	169	170	171	172	173	174	175	176	177	178	179	180
CD PLAY	0	1.6	1.7	0.1	1.3	1.2	1.7	1.7	0.9	0.1	0.1	0.9	1.7	0.1	3.4	3.0	3.4	0.1	3.4	0.1
Ref No.	IC8001																			
MODE	181	182	183	184	185	186	187	188	189	190	191	192	193	194	195	196	197	198	199	200
CD PLAY	3.0	0.2	2.8	3.4	0.1	0.1	3.4	3.4	0.1	0.1	0.1	0.1	0.1	0.1	0.1	0.1	3.4	3.0	3.0	2.9
Ref No.	IC8001																			
MODE	201	202	203	204	205	206	207	208	209	210	211	212	213	214	215	216	217	218	219	220
CD PLAY	3.1	2.9	3.1	3.4	0.1	3.1	3.0	3.0	3.3	3.1	3.0	3.1	3.0	3.4	0.1	2.9	1.3	2.7	2.7	2.7
Ref No.	IC8001																			
MODE	221	222	223	224	225	226	227	228	229	230	231	232	233	234	235	236	237	238	239	240
CD PLAY	3.3	0.1	1.7	3.4	1.7	0.1	3.3	3.3	3.2	0.1	2.0	0.1	0.1	1.3	1.7	0.1	0.1	0.1	3.4	1.6
Ref No.	IC8001																			
MODE	241	242	243	244	245	246	247	248	249	250	251	252	253	254	255	256				
CD PLAY	0.1	1.7	0.2	1.7	0.3	1.6	1.6	0.1	0	0.1	0.1	0.1	0.1	0.1	0.1	0.1				
Ref No.	IC8051																			
MODE	1	2	3	4	5	6	7	8	9	10	11	12	13	14	15	16	17	18	19	20
CD PLAY	3.4	3.0	3.4	3.1	3.1	0.1	3.1	3.3	3.4	3.0	3.0	0.1	2.9	3.4	2.7	3.3	3.3	3.3	3.2	2.0
Ref No.	IC8051																			
MODE	21	22	23	24	25	26	27	28	29	30	31	32	33	34	35	36	37	38	39	40
CD PLAY	1.7	0.1	0.1	0.2	0.3	1.5	3.4	0.1	1.6	1.7	1.7	1.6	0.1	0.1	0.1	-	3.4	1.7	2.7	-
Ref No.	IC8051																			
MODE	41	42	43	44	45	46	47	48	49	50	51	52	53	54	54					
CD PLAY	0.1	3.0	3.4	3.1	3.0	0.1	3.0	3.2	3.4	2.9	2.9	0.1	3.0	0.1	0.1					
Ref No.	IC8111																			
MODE	1	2	3	4	5	6	7	8												
CD PLAY	3.4	-	0.1	-	4.4	-	-	4.7												

Ref No.	IC8151																			
MODE	1	2	3	4	5															
CD PLAY	3.0	3.0	0.1	1.3	0.9															
Ref No.	IC8251																			
MODE	1	2	3	4	5	6	7	8	9	10	11	12	13	14	15	16	17	18	19	20
CD PLAY	1.7	1.7	1.7	2.2	2.2	1.9	0.1	4.7	3.4	0.1	2.4	2.4	2.4	2.4	4.4	4.5	5.3	3.5	0.1	3.4
Ref No.	IC8251																			
MODE	21	22	23	24	25	26	27	28												
CD PLAY	9.2	9.1	1.8	1.7	1.7	1.7	3.4	4.3												
Ref No.	IC8421																			
MODE	1	2	3	4	5	6	7	8	9	10	11	12	13	14	15	16	17	18	19	20
CD PLAY	0	2.3	3.0	3.4	1.7	0.9	1.7	1.7	4.9	0	0.9	0.1	0.1	0	2.4	2.4	4.9	0	2.4	2.4
Ref No.	IC8421																			
MODE	21	22	23	24	25	26	27	28												
CD PLAY	2.4	2.4	4.9	0	2.5	2.4	2.4	4.8												
Ref No.	IC8601																			
MODE	1	2	3	4																
CD PLAY	3.3	1.3	0.1	0.1																
Ref No.	IC8606																			
MODE	1	2	3	4	5															
CD PLAY	3.3	3.4	0.1	0.1	-															
Ref No.	IC8611																			
MODE	1	2	3	4	5	6	7	8												
CD PLAY	0.1	0.1	0.1	0.1	3.4	3.4	0.1	3.4												
Ref No.	IC8651																			
MODE	1	2	3	4	5	6	7	8	9	10	11	12	13	14	15	16	17	18	19	20
CD PLAY	0.7	1.1	2.3	1.3	1.9	1.4	2.2	1.3	1.1	0.1	3.4	3.4	3.4	3.4	-	1.2	2.1	2.2	1.9	1.1
Ref No.	IC8651																			
MODE	21	22	23	24	25	26	27	28	29	30	31	32	33	34	35	36	37	38	39	40
CD PLAY	2.2	2.0	2.5	2.7	2.7	2.7	0.1	2.6	0.7	1.1	1.3	1.0	1.6	1.3	1.3	1.5	3.4	1.7	1.2	1.1
Ref No.	IC8651																			
MODE	41	42	43	44	45	46	47	48												
CD PLAY	1.0	1.1	1.8	1.1	1.7	0.1	3.4	1.4												
Ref No.	IC8691						IC8695							IC8701						
MODE	1	2	3	4	5		1	2	3	4	4	5		1	2	3	4	5		
CD PLAY	3.0	3.0	0.1	4.2	4.7		2.8	2.8	0.1	3.9	3.9	4.7		-	1.7	0.1	1.5	3.4		
Ref No.	Q3901				Q3902				Q3903				Q3941				Q3942			
MODE	E	C	B		E	C	B		E	C	B		E	C	B		E	C	B	
CD PLAY	0.2	4.6	0.7		3.4	5.1	3.4		3.4	5.1	3.4		3.1	3.6	3.1		0.1	3.9	0	
Ref No.	Q3943				Q8551				Q8552				Q8561				Q8562			
MODE	E	C	B		E	C	B		E	C	B		E	C	B		E	C	B	
CD PLAY	3.4	5.1	3.9		0.1	4.6	0.1		0.1	4.6	4.6		1.9	3.5	1.3		3.5	4.1	4.1	
Ref No.	QR8111							QR8420				QR8571								
MODE	1	2	3	4	5	6		E	C	B		E	C	B						
CD PLAY	0.1	0.1	1.4	0.1	0.1	4.4		0	0.1	4.0		3.4	3.3	0.1						

15.2. Main P.C.B.

Ref No.	IC2004																			
MODE	1	2	3	4	5	6	7	8												
CD PLAY	-	4.9	0	0	0	0	0	-												
STANDBY	-	4.8	0	0	0	0	0	-												
Ref No.	IC2018																			
MODE	1	2	3	4	5	6	7	8	9	10	11	12	13	14	15	16	17	18	19	20
CD PLAY	0.1	4.7	4.7	4.7	0	0	4.6	0	0	0	0	4.7	2.4	0	2.3	4.7	4.7	4.7	2.1	0
STANDBY	0	0	0	0.1	0	0	0	0	0	0	0	4.9	2.5	0	2.4	4.9	4.9	4.8	2.7	0
Ref No.	IC2018																			
MODE	21	22	23	24	25	26	27	28	29	30	31	32	33	34	35	36	37	38	39	40
CD PLAY	0	4.7	0	0	0	0	4.7	4.7	4.7	4.7	0	0	0	4.6	0	4.0	4.4	4.6	0	4.6
STANDBY	0	4.8	0	0	0	0	0	0	0	0	0	0	0	0	0	0.1	0.1	0	0	0
Ref No.	IC2018																			
MODE	41	42	43	44	45	46	47	48	49	50	51	52	53	54	55	56	57	58	59	60
CD PLAY	0	4.6	0	0.1	0	0	0	0	0	0	4.7	0	0	0	4.6	4.6	4.6	4.5	4.7	0
STANDBY	0	0	0	0	0	0	0	0	0	0	0	0	0	0	0	0	0	0	0	0
Ref No.	IC2018																			
MODE	61	62	63	64	65	66	67	68	69	70	71	72	73	74	75	76	77	78	79	80
CD PLAY	0	4.7	4.7	0	0	0	0	4.6	0	4.4	4.7	4.7	2.5	0	0	0	0	0	0	0
STANDBY	0	4.9	0	0	0	0	0	0	0	0	0	0.7	0	0	0	0	0	0	0	0
Ref No.	IC2018																			
MODE	81	82	83	84	85	86	87	88	89	90	91	92	93	94	95	96	97	98	99	100
CD PLAY	0	0	0	4.7	0	0	4.7	0	0	0	4.7	0	0.7	1.2	0.4	0	1.6	4.8	4.7	4.7
STANDBY	0	0	0	0	0	0	0	0	0	0	4.8	0	0.7	1.2	0.4	0	1.6	4.9	4.9	0
Ref No.	IC2102																			
MODE	1	2	3	4	5	6	7	8	9	10	11	12	13	14	15	16	17	18	19	20
CD PLAY	0	0	0	0	0	0	0	0	0	0	0	0	0	0	0	0	0	0	0	0
STANDBY	0	0	0	0	0	0	0	0	0	0	0	0	0	0	0	0	0	0	0	0
Ref No.	IC2102																			
MODE	21	22	23	24	25	26	27	28	29	30	31	32	33	34	35	36	37	38	39	40
CD PLAY	0	0	0	0	0	0	0	0	0	0	0	0.1	0	0	0	0	0	0	0	0.1
STANDBY	0	0	0	0	0	0	0	0	0	0	0	0.1	0	0	0	0	0	0	0	0.1
Ref No.	IC2102																			
MODE	41	42	43	44	45	46	47	48	49	50	51	52	53	54	55	56	57	58	59	60
CD PLAY	0	0	0	0	0	0	0	0	0	1.3	0	0	0	0.1	0	0	0	0	0	0
STANDBY		0	0	0	0	0	0	0	0	1.4	0	0	0	0.1	0	0	0	0	0	0
Ref No.	IC2102																			
MODE	61	62	63	64	65	66	67	68	69	70	71	72	73	74	75	76	77	78	79	80
CD PLAY	0	-0.1	0	0	4.8	0	5.6	0	0	0	0	0	0	0	0	0	0	0	0	0
STANDBY	0	-0.1	0	0	4.8	0	5.6	0.1	0	0	0	0	0	0	0	0	0	0	0	0
Ref No.	IC2102																			
MODE	81	82	83	84	85	86	87	88	89	90	91	92	93	94	95	96	97	98	99	100
CD PLAY	0	0	0	0	-6.2	6.3	0	0	0	0	0	0	0	0	0	0	0	0	0	0
STANDBY	0	0	0	0	-6.4	6.5	0	0	0	0	0	0	0	0	0	0	0	0	0	0
Ref No.	IC2103																			
MODE	1	2	3	4	5	6	7	8												
CD PLAY	0	0	0	-6.2	0	0	0	6.2												
STANDBY	0	0	0	-6.4	0	0	0	6.5												
Ref No.	IC2104																			
MODE	1	2	3	4	5	6	7	8	9	10	11	12	13	14						
CD PLAY	6.4	5.2	0.2	7.0	0	2.1	6.3	6.2	2.4	0	0.7	0	0.2	6.3						
STANDBY	6.4	5.2	0.2	7.0	0	2.1	6.3	6.2	2.4	0	0.7	0	0.2	6.3						
Ref No.	IC2105																			
MODE	1	2	3	4	5	6	7	8	9	10	11	12	13	14						
CD PLAY	0	0	0	6.9	0	0	0	0	0	0	-6.9	0	0	0						
STANDBY	0	0	0	6.9	0	0	0	0	0	0	-6.9	0	0	0						
Ref No.	IC2205																			
MODE	1	2	3	4	5	6	7	8	9	10	11	12	13	14						
CD PLAY	6.3	6.3	6.4	7.0	0	0.1	-5.5	-0.1	0	0	-6.9	0	0	0						
STANDBY	6.3	6.3	6.4	7.0	0	0.1	-5.5	-0.1	0	0	-6.9	0	0	0						
Ref No.	IC2301																			
MODE	1	2	3	4	5	6	7	8	9	10	11	12	13	14	15	16				
CD PLAY	0	6.2	3.3	6.2	-5.5	-5.5	-6.9	0	0	0.1	0	0	0	0	0	7.0				
STANDBY	0	6.2	3.3	6.3	-5.5	-5.5	-6.9	0	0	0.1	0	0	0	0	0	7.0				
Ref No.	IC2600																			
MODE	1	2	3	4	5	6	7	8												
CD PLAY	0	0	0	-6.3	0	0	0	6.3												
STANDBY	0	0	0	-6.4	0	0	0	6.4												
Ref No.	IC2801						IC2802							IC2903						
MODE	1	2	3	4	5		1	2	3	4	5	6		1	2	3	4	5		
CD PLAY	16.1	6.1	0	1.0	3.7		0	2.5	4.8	2.5	0	2.5		17.0	5.8	0	1.0	3.1		
STANDBY	0.5	0	0	0	0		0	2.9	4.8	2.5	0	2.5		17.1	2.8	0	1.0	3.1		
Ref No.	Q2003				Q2004				Q2006				Q2030							
MODE	E	C	B		E	C	B		E	C	B		E	C	B					
CD PLAY	0	2.2	0		0	0	4.5		1.1	0	0.5		0	0	4.7					
STANDBY	0	0.1	0		0	0	0		0	0	0		0	0	4.6					
Ref No.	Q2096				Q2097				Q2101							Q2201				
MODE	E	C	B		E	C	B		1	2	3	4	5	6		E	C	B		
CD PLAY	0	0.6	0		0	0	0.6		0	-4.2	0	0	-4.2	0		0	4.2	0		
STANDBY	0	0.6	0		0	0	0.6		0	0.6	0	0	0.6	0		1.8	1.8	0		
Ref No.	Q2303				Q2304				Q2305											
MODE	E	C	B		E	C	B		1	2	3	4	5	6						
CD PLAY	0	-4.6	0		0	0	0.7		0	0.6	0	0	0.6	0						
STANDBY	0	-4.6	0		0	0	0.7		0	0.6	0	0	0.6	0						
Ref No.	Q2306						Q2801					Q2804				Q2805				
MODE	1	2	3	4	5	6		E	C	B		E	C	B		E	C	B		
CD PLAY	0	-4.6	0.1	0	-4.6	3.3		16.2	-3.0	16.1		8.6	14.0	9.2		4.3	5.4	4.9		
STANDBY	0	-4.6	0.1	0	-4.6	3.3		0.5	0.2	0.5		0	0	0.5		0	0	0		
Ref No.	Q2903				Q2904				Q2906				Q2907				Q2909			
MODE	E	C	B		E	C	B		E	C	B		E	C	B		E	C	B	
CD PLAY	6.3	6.3	6.9		6.2	9.2	6.9		-6.3	-21.0	-6.8		0	-6.9	-0.6		-2.2	4.9	0	
STANDBY	6.5	6.5	7.1		6.2	9.2	6.9		-6.9	-21.0	-6.4		0	-6.9	-0.6		-2.2	4.8	0	
Ref No.	Q2912				Q2913				Q2914				Q2915				Q2955			
MODE	E	C	B		E	C	B		E	C	B		E	C	B		E	C	B	
CD PLAY	9.2	11.1	9.8		9.2	11.1	9.8		3.2	3.5	3.7		4.7	4.9	4.7		5.1	5.7	5.7	
STANDBY	9.2	11.2	9.8		9.2	11.2	9.8		3.2	3.2	3.8		4.6	4.8	4.7		5.1	5.7	5.7	

Ref No.	IC5000																			
MODE	1	2	3	4	5	6	7	8	9	10	11	12	13	14	15	16	17	18	19	20
CD PLAY	2.6	0	0	29.2	0	-29.2	-21.2	29.5	8.2	-3.4	-29.4	-16.8	-29.2	-3.4	8.2	29.5	-29.2	-29.2	0	29.2
STANDBY	2.6	0	0	29.2	0	-29.2	-21.2	29.2	8.2	-3.4	-29.4	-16.8	-29.4	-3.4	8.2	29.5	-29.2	-29.2	0	29.2
Ref No.	IC5000																			
MODE	21	22	23																	
CD PLAY	0	0	3.0																	
STANDBY	0	0	3.0																	
Ref No.	IC5200																			
MODE	1	2	3	4	5	6	7	8	9	10	11	12	13	14	15	16	17	18	19	20
CD PLAY	2.6	0	0	29.2	0	-29.2	-21.3	29.5	7.8	-3.4	-29.4	-17.2	-29.4	-3.4	7.8	29.5	-29.2	-29.2	0	29.2
STANDBY	2.6	0	0	29.2	0	-29.2	-21.3	29.5	7.8	-3.4	-29.4	-17.2	-29.4	-3.4	7.8	29.5	-29.2	-29.2	0	29.2
Ref No.	IC5200																			
MODE	21	22	23																	
CD PLAY	0	0	3.0																	
STANDBY	0	0	3.0																	
Ref No.	IC5300																			
MODE	1	2	3	4	5	6	7	8	9	10	11	12	13	14	15	16	17	18	19	20
CD PLAY	2.6	0	0	29.2	0	-29.2	-21.3	29.5	7.8	-3.4	-29.4	-17.2	-29.4	-3.4	7.8	29.5	-29.2	-29.2	0	29.2
STANDBY	2.6	0	0	29.2	0	-29.2	-21.3	29.3	7.8	-3.4	-29.4	-17.2	-29.4	-3.4	7.8	29.5	-29.2	-29.2	0	29.2
Ref No.	IC5300																			
MODE	21	22	23																	
CD PLAY	0	0	3.0																	
STANDBY	0	0	3.0																	
Ref No.	IC5400																			
MODE	1	2	3	4	5	6	7	8	9	10	11	12	13	14	15	16	17	18	19	20
CD PLAY	2.6	0	0	29.2	0	-29.2	-21.3	29.5	7.8	-3.4	-29.4	-17.1	-29.4	-3.4	-7.9	29.5	-29.2	-29.2	0	29.2
STANDBY	2.6	0	0	29.2	0	-29.2	-21.3	29.3	7.8	-3.4	-29.4	-17.0	-29.4	-3.4	-7.9	29.5	-29.2	-29.2	0	29.2
Ref No.	IC5400																			
MODE	21	22	23																	
CD PLAY	0	0	3.0																	
STANDBY	0	0	3.0																	
Ref No.	IC5500																			
MODE	1	2	3	4	5	6	7	8	9	10	11	12	13	14						
CD PLAY	0	5.3	2.6	2.8	2.4	2.6	0	4.9	1.7	2.6	2.8	3.6	1.4	5.5						
STANDBY	0	5.3	2.6	2.8	2.4	2.6	0	4.9	1.4	2.6	2.8	4.5	1.6	5.6						
Ref No.	IC5971																			
MODE	1	2	3	4	5	6	7	8												
CD PLAY	0	0	0	18.8	16.1	5.1	18.5	19.8												
STANDBY	0	0	0	18.8	16.0	5.1	18.5	19.8												
Ref No.	IC5701					IC5702				IC5721										
MODE	1	2	3	4	5		1	2	3		1	2	3	4	5	6	7	8		
CD PLAY	1.6	0	162.0	16.9	0		13.2	-29.4	-26.8		0	18.6	0	0.9	160.4	0	160.8	161.3		
STANDBY	1.2	0	162.0	16.9	0		13.1	-29.4	-26.8		0	18.7	0	0.9	161.2	0.1	161.9	161.7		
Ref No.	Q5101				Q5102				Q5500				Q5501				Q5601			
MODE	E	C	B		E	C	B		E	C	B		E	C	B		E	C	B	
CD PLAY	0	4.8	0		0	4.8	0		2.8	0	5.3		2.8	2.8	2.5		0	0	0.6	
STANDBY	0	4.8	0		0	4.8	0		2.8	0	5.4		2.8	2.8	2.5		0	0	0.6	
Ref No.	Q5602				Q5603				Q5604				Q5701				Q5704			
MODE	E	C	B		E	C	B		E	C	B		E	C	B		E	C	B	
CD PLAY	0	0	0.6		6.2	6.2	5.6		0	0	0.7		7.4	8.6	6.5		3.5	4.2	4.0	
STANDBY	0	0	0.6		6.2	6.2	6.1		0	0	0.7		7.4	8.6	6.4		3.6	4.2	4.0	
Ref No.	Q5705				Q5706				Q5710				Q5740				Q5741			
MODE	E	C	B		E	C	B		E	C	B		E	C	B		E	C	B	
CD PLAY	0	3.3	0.4		-18.2	-16.7	-17.6		0	29.5	0		8.9	17.1	9.5		0	4.9	0	
STANDBY	0	3.4	0.4		-18.1	-16.2	-17.5		0	29.5	0		8.9	17.1	9.5		0	4.9	0	
Ref No.	Q5742				Q5743				Q5744				Q5745					Q5746		
MODE	E	C	B		E	C	B		1	2	3		1	2	3	4		E	C	B
CD PLAY	0	0.1	0.7		0.7	0	0		0	4.6	0.1		5.6	4.4	0	0.4		0	0.1	4.8
STANDBY	0	0.1	0.7		0.7	0	0		0	4.6	0		5.6	4.4	0	0.4		0	0.1	4.7
Ref No.	Q5747				Q5748				Q5750				Q5751					Q5752		
MODE	E	C	B		1	2	3	4		E	C	B		E	C	B		E	C	B
CD PLAY	17.0	16.9	1.0		0.6	0	0.4	5.6		0	4.9	-2.5		0	0	0.5		0	4.8	0
STANDBY	17.0	16.9	1.0		0.6	0	0.4	5.6		0	4.9	-2.5		0	0	0.5		0	4.8	0

15.3. FL P.C.B., Mic & Tray Loading P.B.C.

FL P.C.B.

Ref No.	IC6901																			
MODE	1	2	3	4	5	6	7	8	9	10	11	12	13	14	15	16	17	18	19	20
CD PLAY	4.9	0	0	-0.1	2.8	-	0.7	4.6	3.7	-	-	0	4.8	-21.0	-21.0	-18.9	-18.8	-14.7	-18.9	-14.7
STANDBY	4.9	0	0	0	2.8	-	0.7	4.6	3.7	-	-	0	4.9	-21.0	-21.0	-21.0	-18.9	-10.5	-8.4	-14.7
Ref No.	IC6901																			
MODE	21	22	23	24	25	26	27	28	29	30	31	32	33	34	35	36	37	38	39	40
CD PLAY	-12.9	-21.0	-21.0	-14.7	-14.7	-18.9	-21.0	-21.0	-16.8	-21.4	-14.9	-12.8	-19.1	-19.1	-19.1	-19.1	-19.1	-19.1	-19.1	-19.1
STANDBY	-14.7	-21.0	-18.9	-10.5	-10.5	-16.8	-21.0	-18.9	-8.4	-21.4	-12.7	-10.6	-19.1	-19.1	-19.1	-19.1	-19.1	-19.1	-19.1	-19.1
Ref No.	IC6901																			
MODE	41	42	43	44																
CD PLAY	-19.1	-19.1	4.9	-0.1																
STANDBY	-19.1	-19.1	4.9	0																

MIC P.C.B.

Ref No.	IC2204							
MODE	1	2	3	4	5	6	7	8
CD PLAY	-4.9	-6.3	-5.9	-1.2	-5.7	-5.7	-0.1	0
STANDBY	-5.0	-6.3	-5.9	-1.2	-5.7	-5.7	-0.1	0

Tray Loading P.C.B.

Ref No.	IC904								
MODE	1	2	3	4	5	6	7	8	9
CD PLAY	4.7	8.0	0.6	8.0	0.1	8.0	0.6	2.7	4.7
STANDBY	0	1.8	0.8	1.8	0	2.1	0.9	4.9	0

15.4. Waveform Chart

WF No. IC2102-14 (PLAY) 0.34Vp-p(2usec/div)	WF No. IC2102-15 (PLAY) 88Vp-p(5msec/div)	WF No. IC2102-16, 17, 18, 19, 28, 41, 44 (PLAY) 84Vp-p(5msec/div)	WF No. IC2102-20 (PLAY) 1Vp-p(500usec/div)
WF No. IC2102-21, 34, 61, 62 63, 64, 65 (PLAY) 0.30Vp-p(2usec/div)	WF No. IC2102-30 (PLAY) 4.4Vp-p(5msec/div)	WF No. IC2102-37 (PLAY) 0.28Vp-p(2usec/div)	WF No. IC2102-66, 67 (PLAY) 0.32Vp-p(2usec/div)
WF No. IC2102-81 (PLAY) 0.18Vp-p(5msec/div)	WF No. IC2102-82, 83 (PLAY) 0.24Vp-p(500usec/div)	WF No. IC2102-84 (PLAY) 0.35Vp-p(2usec/div)	WF No. IC2801- 4 (PLAY) 1.2Vp-p(5msec/div)
WF No. IC2801- 8, 11 (PLAY) 1.4Vp-p(50usec/div)	WF No. IC2801- 13 (PLAY) 0.6Vp-p(50usec/div)	WF No. IC2801- 15 (PLAY) 0.6Vp-p(50usec/div)	WF No. IC2801- 18, 21 (PLAY) 1Vp-p(50usec/div)
WF No. IC2801- 24, 27 (PLAY) 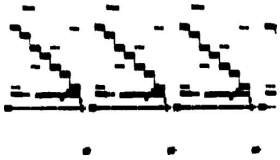 2.2Vp-p(50usec/div)	WF No. IC2801- 30 (PLAY) 2.3Vp-p(50usec/div)	WF No. IC2801- 32 (PLAY) 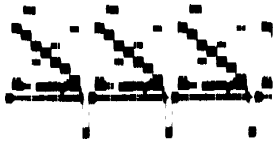 1.5Vp-p(20usec/div)	WF No. IC3701- 15 (PLAY) 0.12Vp-p(100nsec/div)
WF No. IC3701- 153, 154, 155, 156, 158 (PLAY) 3.2Vp-p(50nsec/div)	WF No. IC3701- 157, 162 (PLAY) 0.19Vp-p(100nsec/div)	WF No. IC3701- 159, 160, 161 (PLAY) 3.4Vp-p(50nsec/div)	WF No. IC3901- 7, 10 (PLAY) 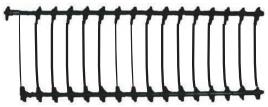 4.4Vp-p(500nsec/div)

WF No. IC3901- 8, 9 (PLAY) 0.16Vp-p(100nsec/div)	WF No. IC3901- 26,27 (PLAY) 1.4Vp-p(5msec/div)	WF No. IC3901- 29, 30, 32 33, 35, 36(PLAY) 6.4Vp-p(5msec/div)	WF No. IC3901- 44 (PLAY) 12.8Vp-p(5msec/div)
WF No. IC3901- 49, 50, 51, 52, 53, 54, 55, 56, 57, 58 (PLAY) 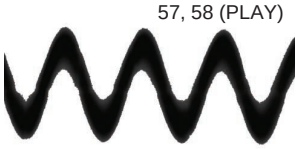 0.14Vp-p(100nsec/div)	WF No. IC5000-14 (PLAY) 92Vp-p(500nsec/div)	WF No. IC5200-10 (PLAY) 96Vp-p(500nsec/div)	WF No. IC5300-10 (PLAY) 96Vp-p(500nsec/div)
WF No. IC5400-14 (PLAY) 96Vp-p(500nsec/div)	WF No. IC8001-169 (PLAY) 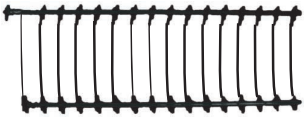 1.9Vp-p(200nsec/div)	WF No. IC8001-170, 171 (PLAY) 0.05Vp-p(50usec/div)	WF No. IC8001-172 (PLAY) 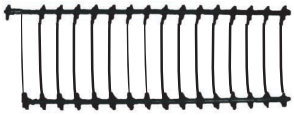 5Vp-p(200nsec/div)

16 Illustration of IC's, Transistors and Diodes

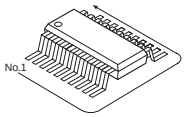

C0ABBA000168 (8p)
C0ABBB000230 (8p)
C0ABCB000088 (14p)
C0CBCAD00082 (8p)
C0EBA0000029 (4p)
C0DBZYY00018 (8p)
C0FBBK000050 (28p)

C0JBAB000011 (14p)
C0JBAR000326 (16p)
C1AB00001731 (6p)
C3ABPG000133 (54p)
C3EBEG000073 (8p)
C3EBGC000055 (8p)
C9ZB00000461 (32p)

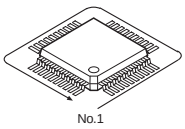

C0HBB0000057 (44p)
C1AB00002239 (80p)
C1BB00001098 (100p)
C2CBYY000196 (100p)
MN2DS0009AP (256p)
MN864701 (164p)

RFKWMHA03160
(For GCS)
RFKWMHA02160
(For GC/GS)

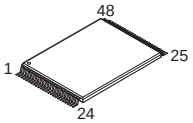

C0DABYY00002
C0AABB000125

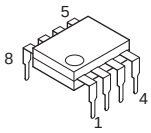

C0GAY0000013
C1BA00000407

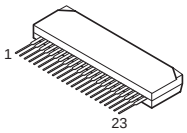

C0GBG0000048

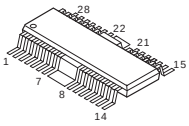

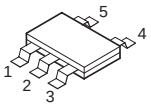

C0CBCDC00063
C0EBE0000455
C0JBAA000344
C0JBAA000346
C0JBAB000614

C0DBEHG00006

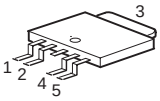

B3PBA0000237

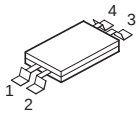

C0DAAMH00012
C5HABZZ00125

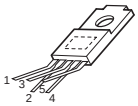

B1GFGCAA0001
XP0621400L

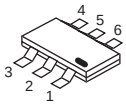

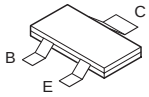

2SD0601AHL
2SD1819A0L
B1ABCF000176
B1ADCE000012
B1ADGB000008

B1CFHA000002
B1GBCFLL0037
B1GBCFJN0033
B1GDCFGA0018
UNR511V00L
UNR521100L

B1BACG000023
B1BACG000048
B1BCCG000002

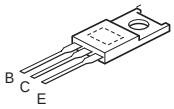

C0DABFC00002

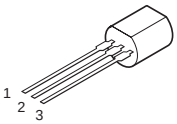

B1AAKD000012
2SC3940ARA

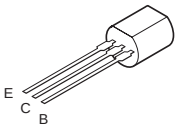

B1BACD000018

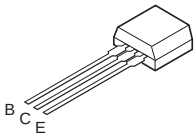

B0BC01200019
B0BC01700015
B0BC02900004
B0BC035A0007
B0BC3R700004
B0BC4R0A0006
B0BC4R3A0006
B0BC4R600016

B0BC5R000009
B0BC6R700006
B0BC7R500001
B0JCPD000025

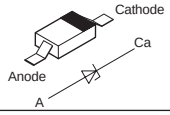

B0ZAZ0000052

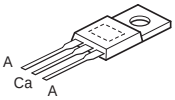

B0HFRJ000012

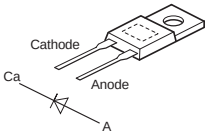

B0HBSM000043

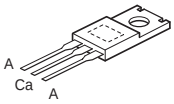

B0ADCJ000020

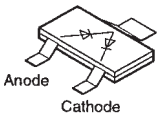

B0ACCK000005

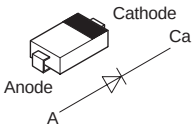

MA2J11100L

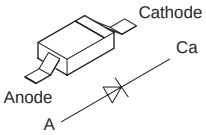

B0BC5R600003

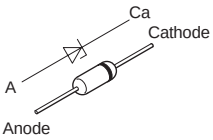

B0EAKM000117
B0EAMM000057
B0JAME000029

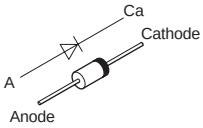

MA2J72800L

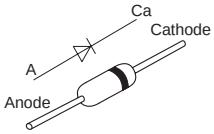

B0FBAR000018

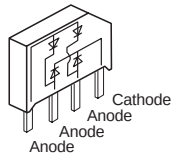

B3AAA0000803

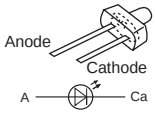

17 Wiring Connection Diagram

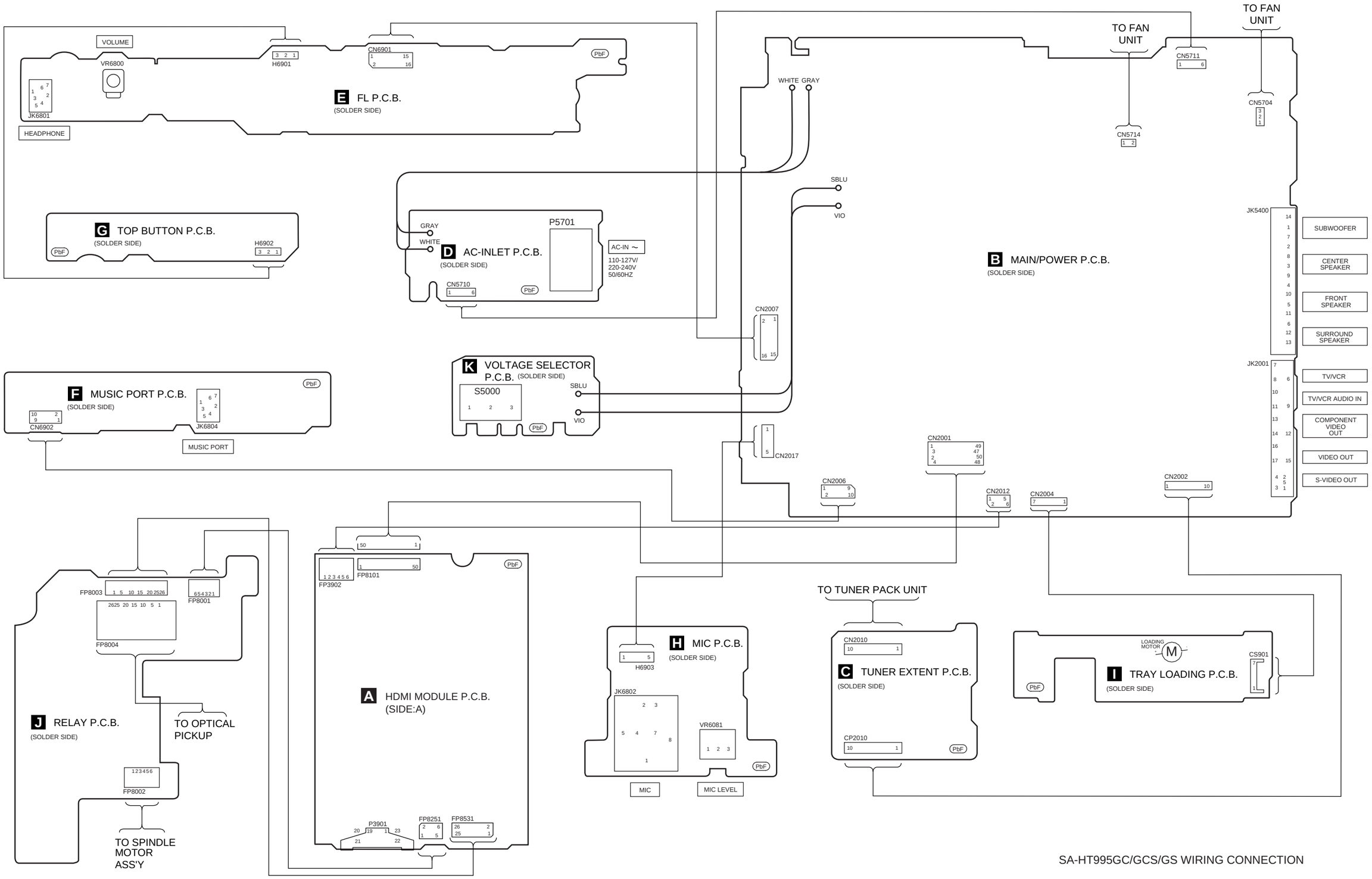

SA-HT995GC/GCS/GS WIRING CONNECTION

18 Block Diagram

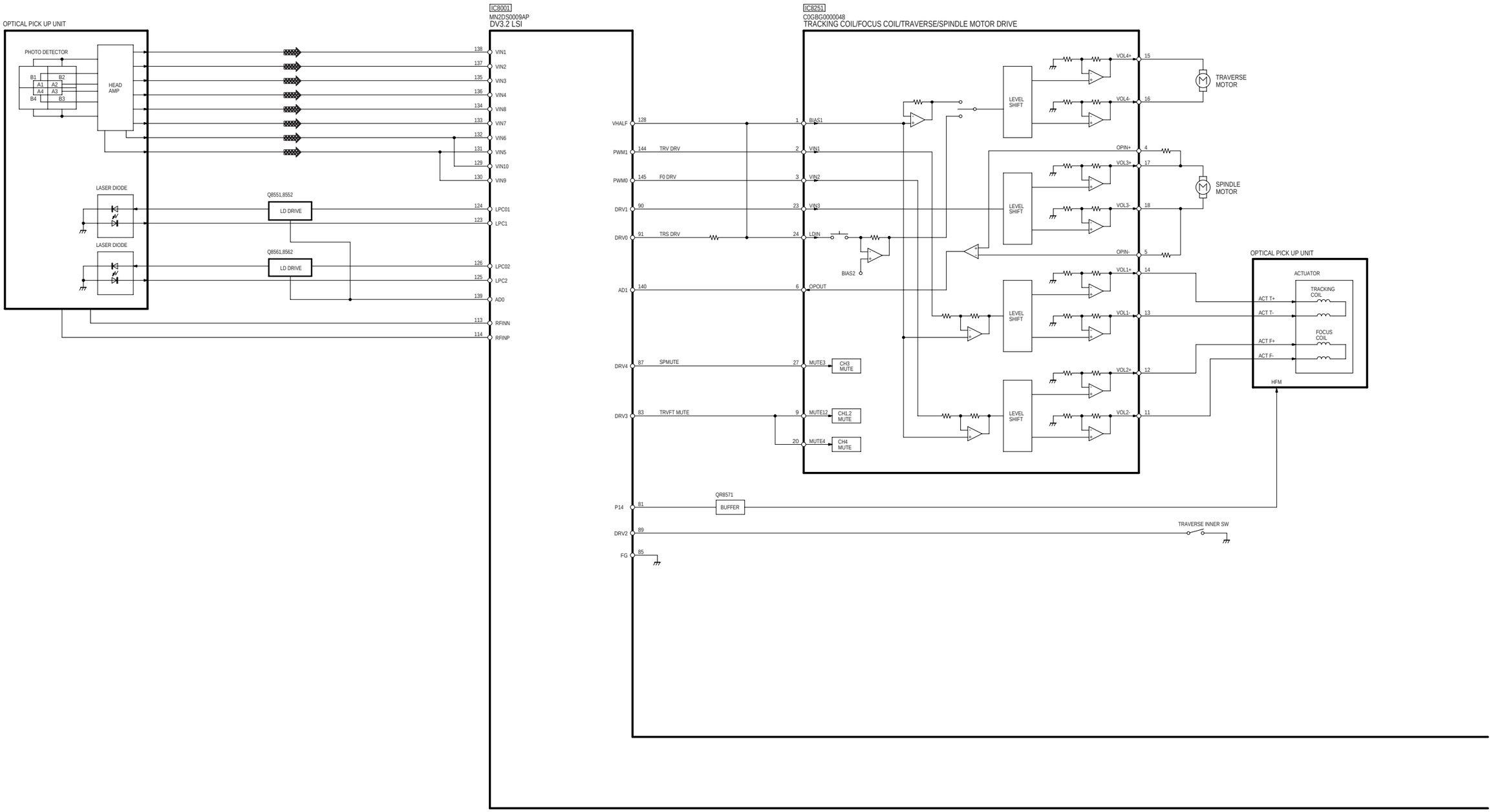

SA-HT995GC/GCS/GS BLOCK DIAGRAM

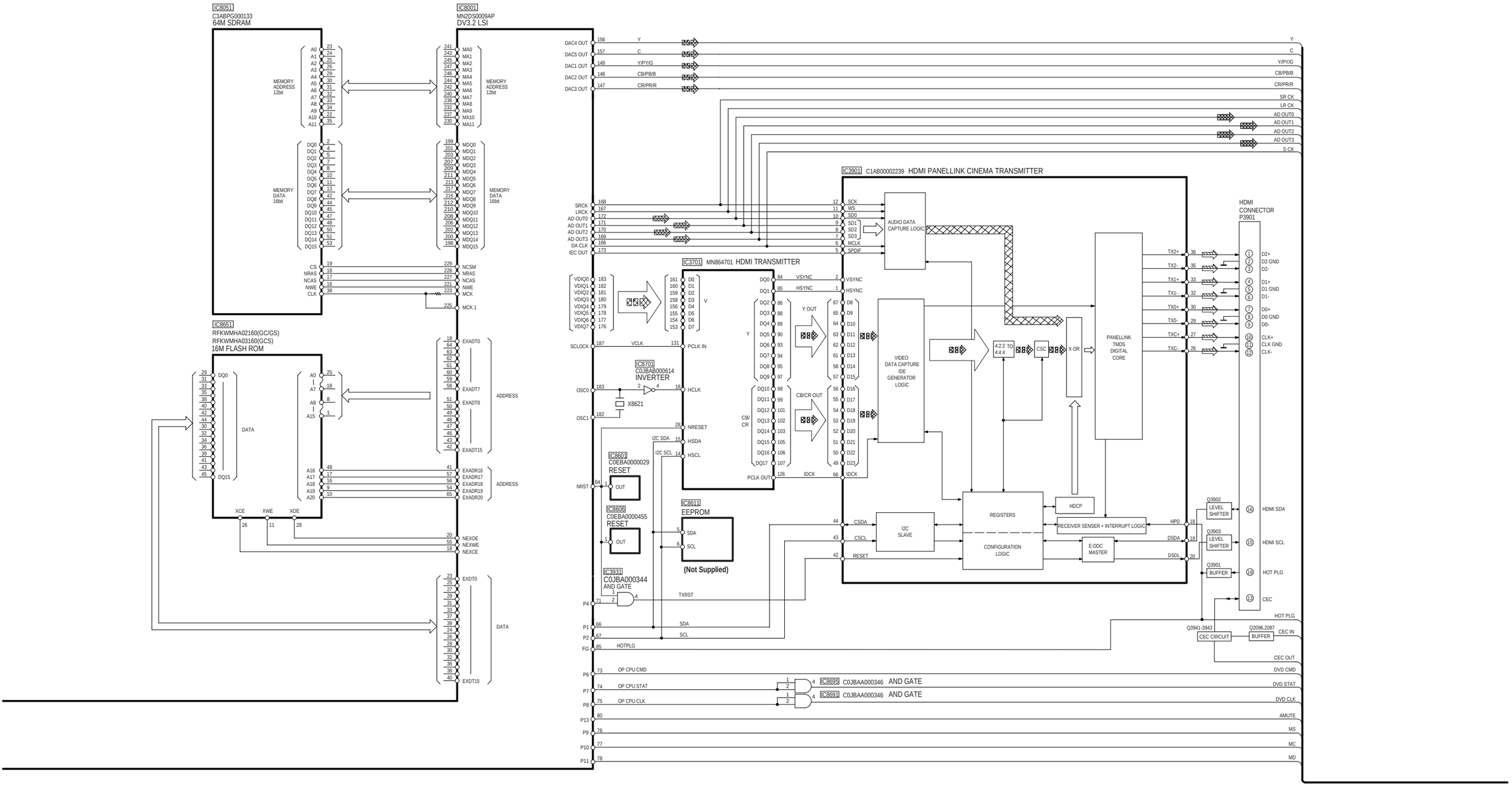

SA-HT995GC/GCS/GS BLOCK DIAGRAM

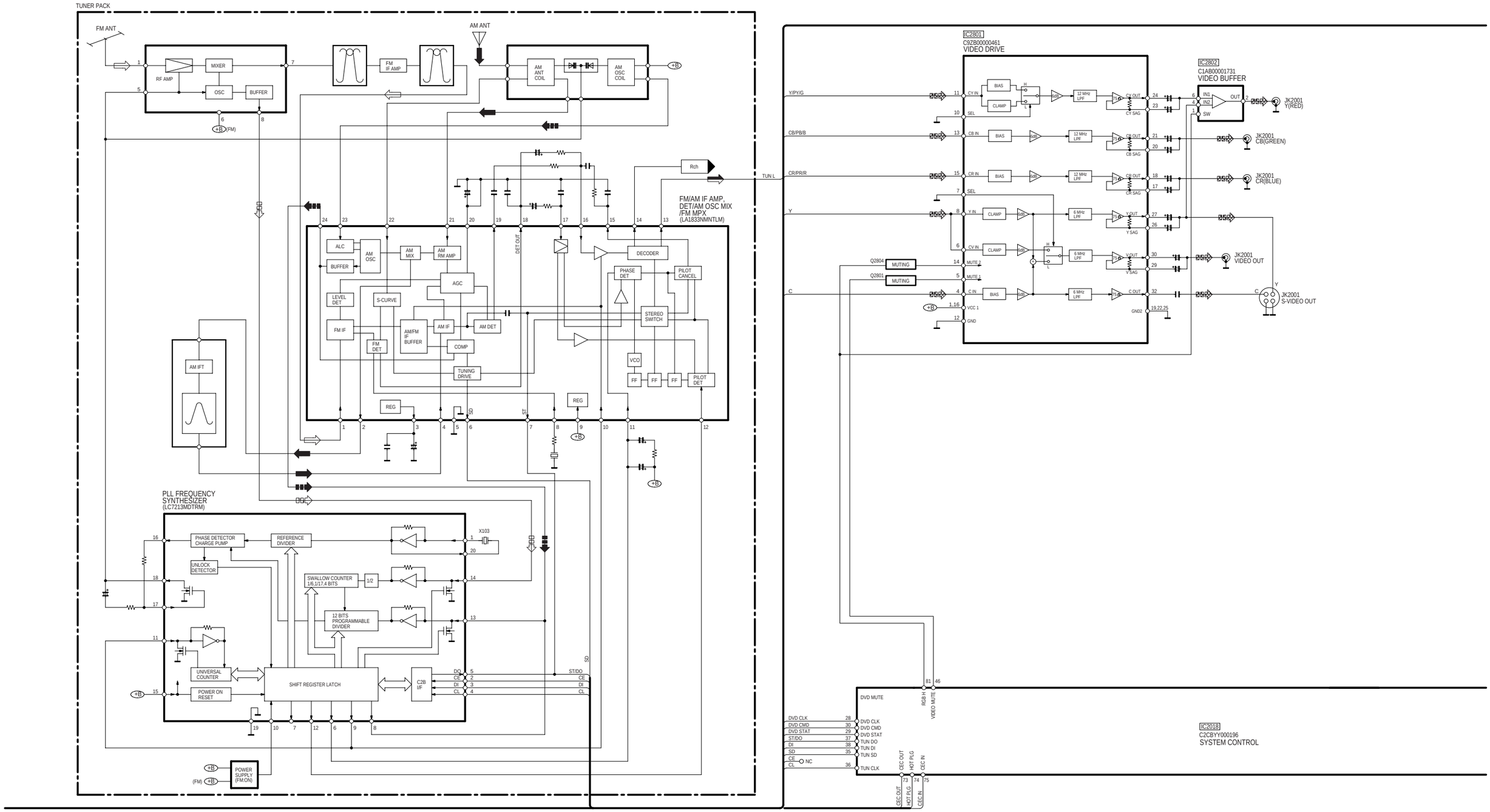

SA-HT995GC/GCS/GS BLOCK DIAGRAM

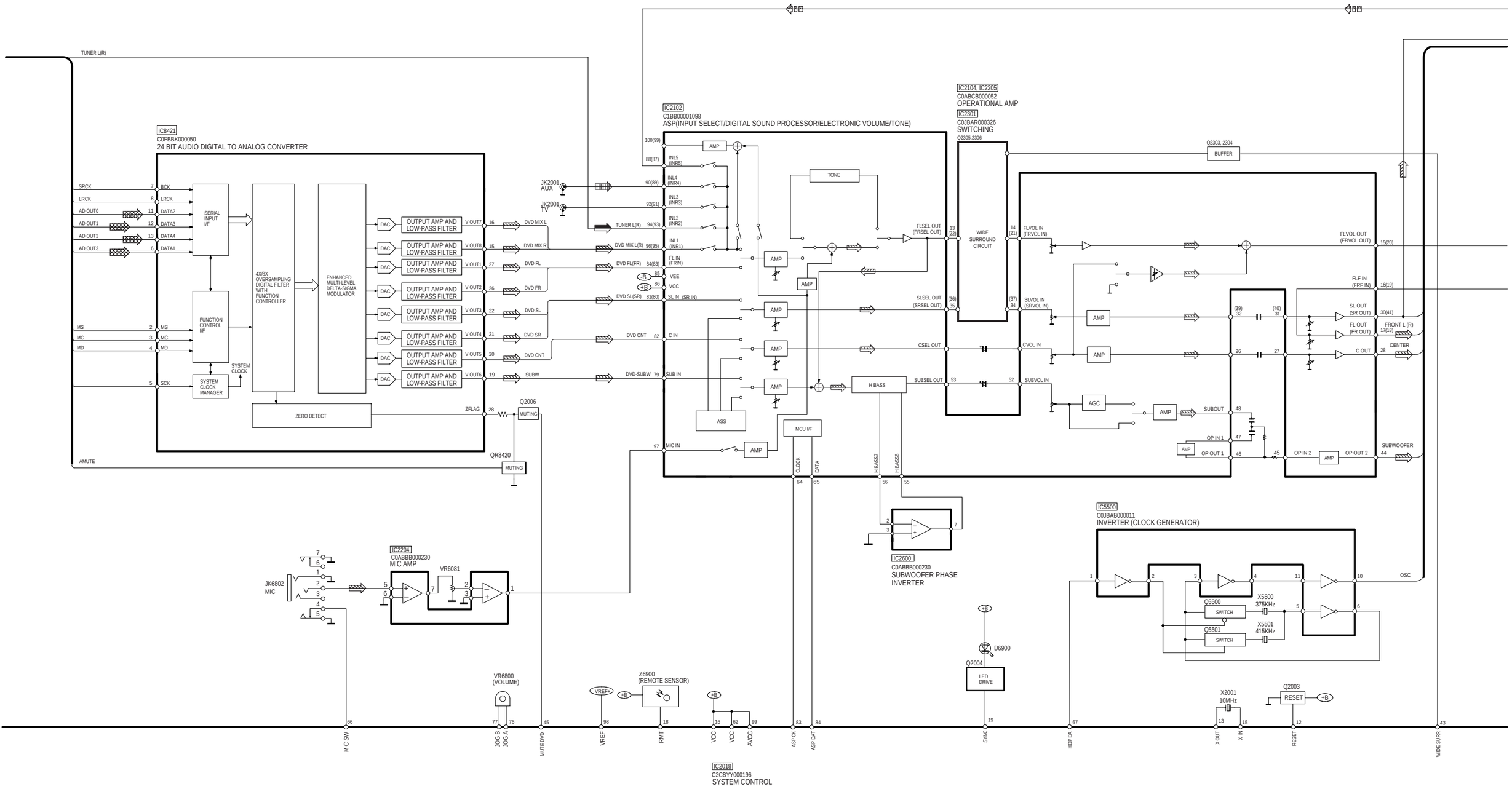

SA-HT995GC/GCS/GS BLOCK DIAGRAM

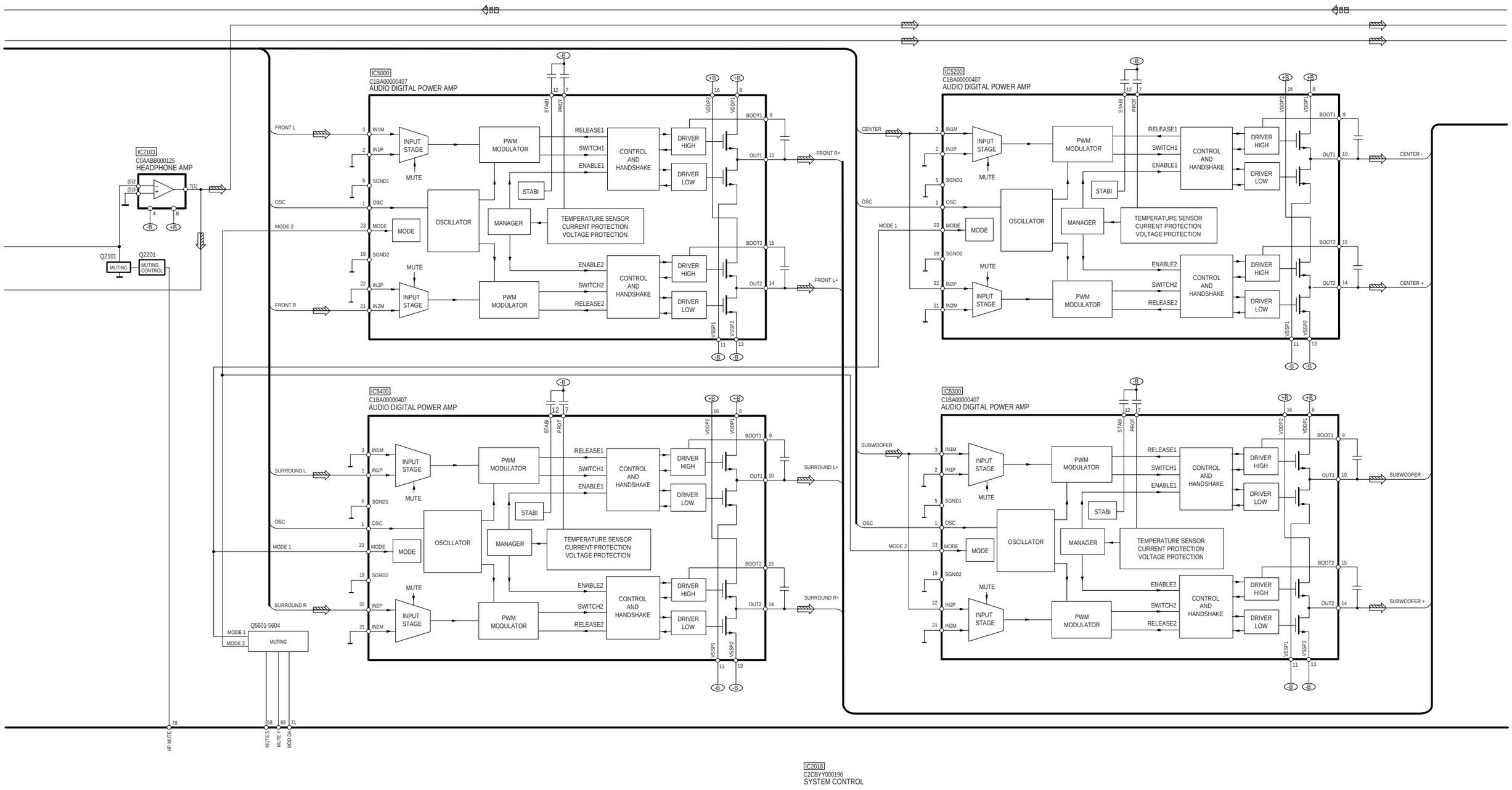

SA-HT995GC/GCS/GS BLOCK DIAGRAM

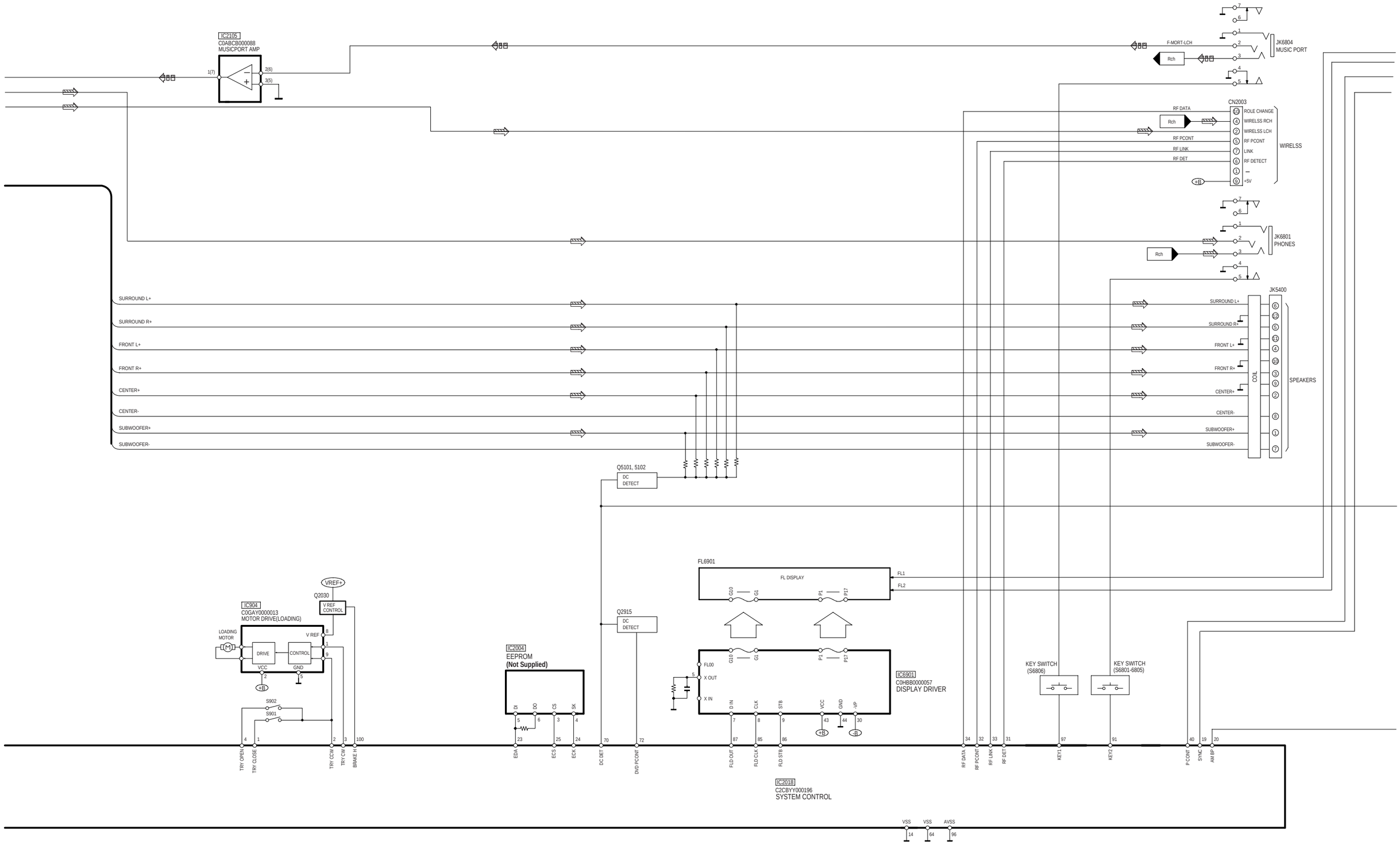

SA-HT995GC/GCS/GS BLOCK DIAGRAM

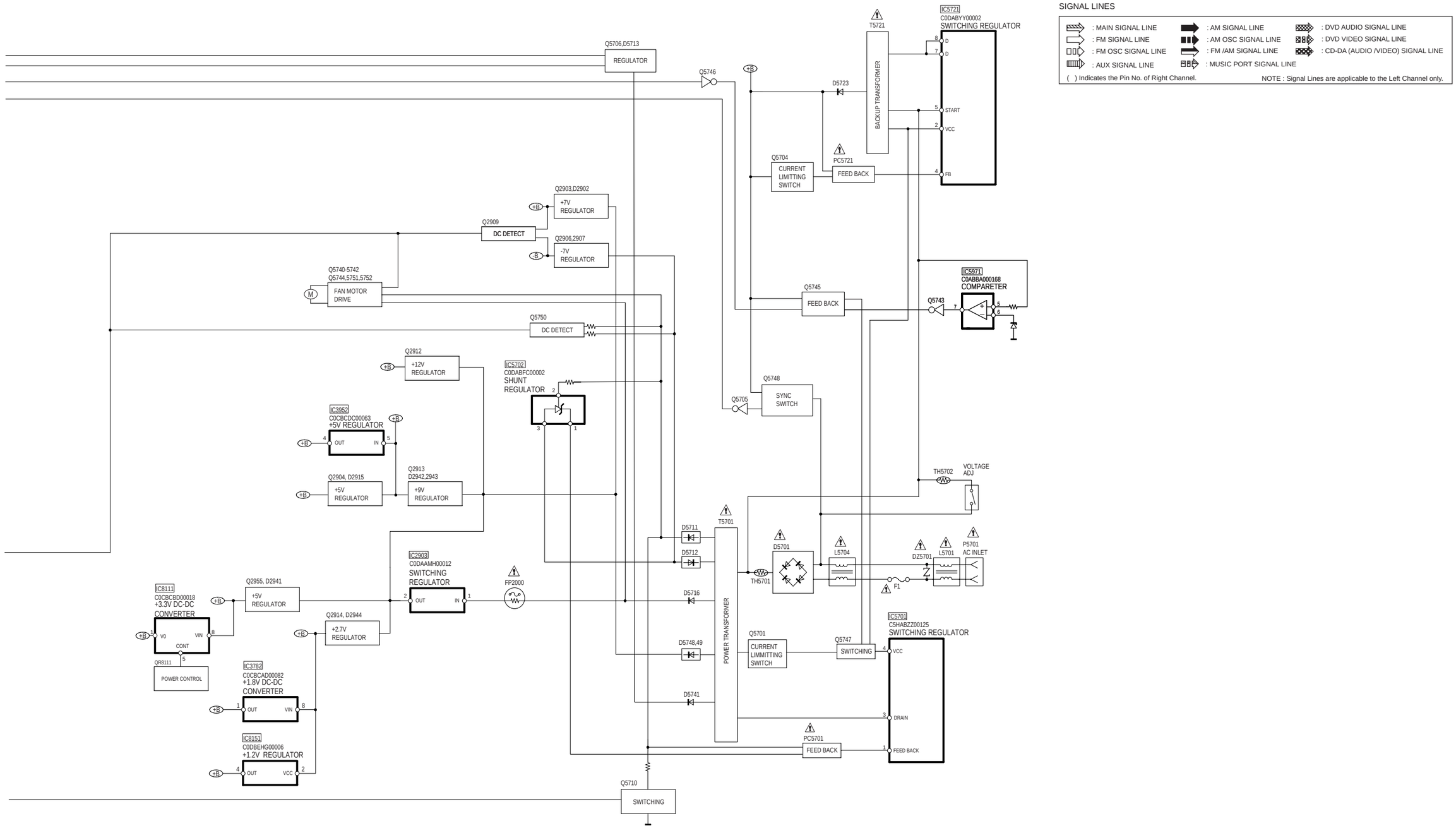

SA-HT995GC/GCS/GS BLOCK DIAGRAM

19 Schematic Diagram Notes

- **This schematic diagram may be modified at any time with the development of new technology.**

Notes:

S6800:	Tray open / close switch (⏏ Open / Close).
S6801:	Stop and TUNE mode /FM mode switch (■ TUNE MODE/FM MODE). /
S6802:	Play and memory switch (▶ Memory).
S6803:	Source select switch (SELECTOR).
S6804:	F. skip, search and Tuning switch (▶▶I / ▶▶ / TUNING ∧).
S6805:	R. skip, search and Tuning switch (I◀◀ / ◀◀ / TUNING ∨).
S6806:	Standby / on switch (POWER ⏻/I).
S5000:	Voltage selector.
S6807:	Surround enhancer.
VR6081:	VR mic level.
VR6800:	VR volume jog.

- Important safety notice:

  Components identified by ⚠ mark have special characteristics important for safety.

  Furthermore, special parts which have purposes of fire-retardant (resistors), high-quality sound (capacitors), low-noise (resistors), etc. are used.

  When replacing any of components, be sure to use only manufacturer´s specified parts shown in the parts list.

- The supply part number is described alone in the replacement parts list.

- Voltage and signal line

: +B Signal line

: CD-DA signal line

: Main signal line

: DVD (Video) signal line

: DVD (Audio) signal line

: FM/AM signal line

: -B Signal line

: MUSIC PORT signal line

: AUX signal line

20 Schematic Diagram

20.1. (A) Optical Pickup Unit & HDMI Module Circuit

SCHEMATIC DIAGRAM-1

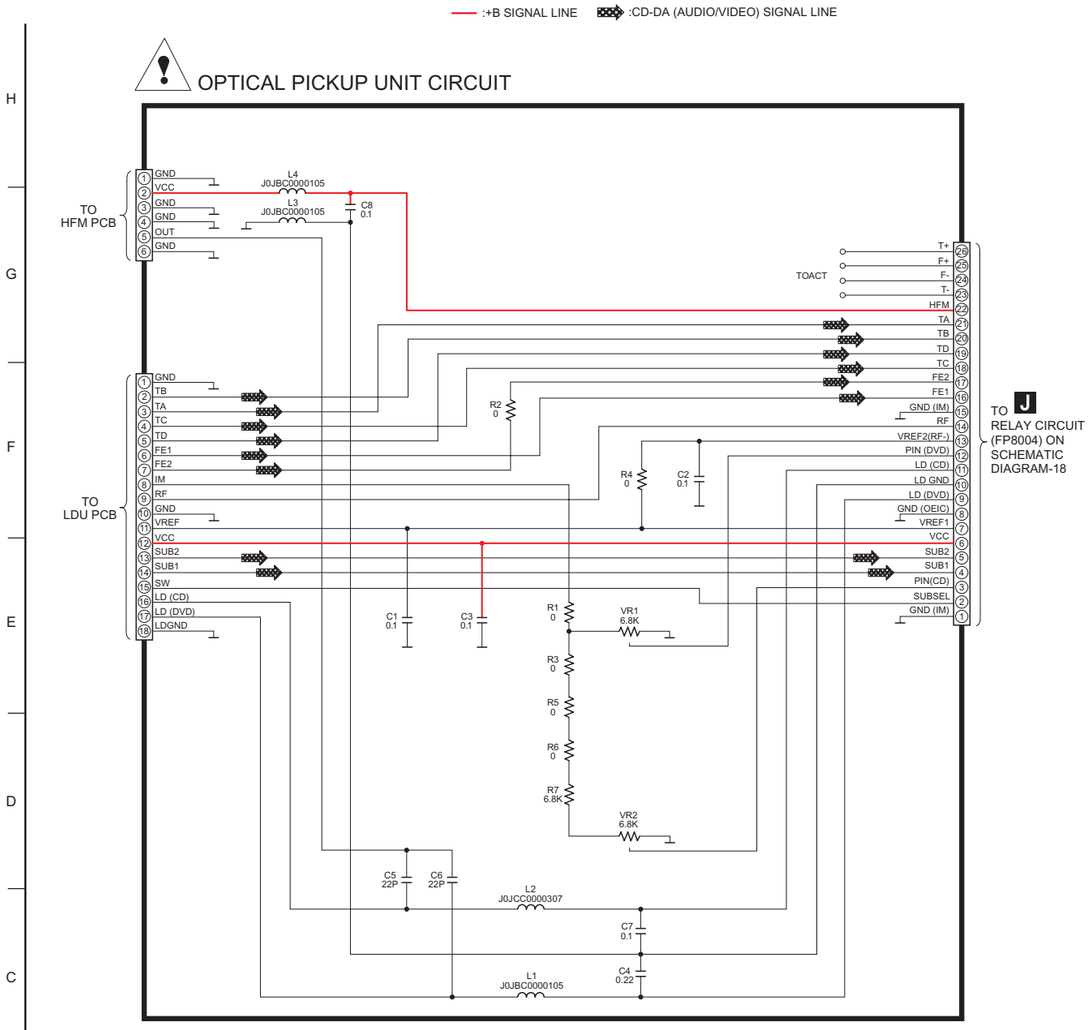

SA-HT995GC/GS/GCS OPTICAL PICKUP UNIT CIRCUIT

SCHEMATIC DIAGRAM-2

A HDMI MODULE CIRCUIT (D2)

:MAIN SIGNAL LINE :DVD(VIDEO) SIGNAL LINE :DVD(AUDIO) SIGNAL LINE :+B SIGNAL LINE

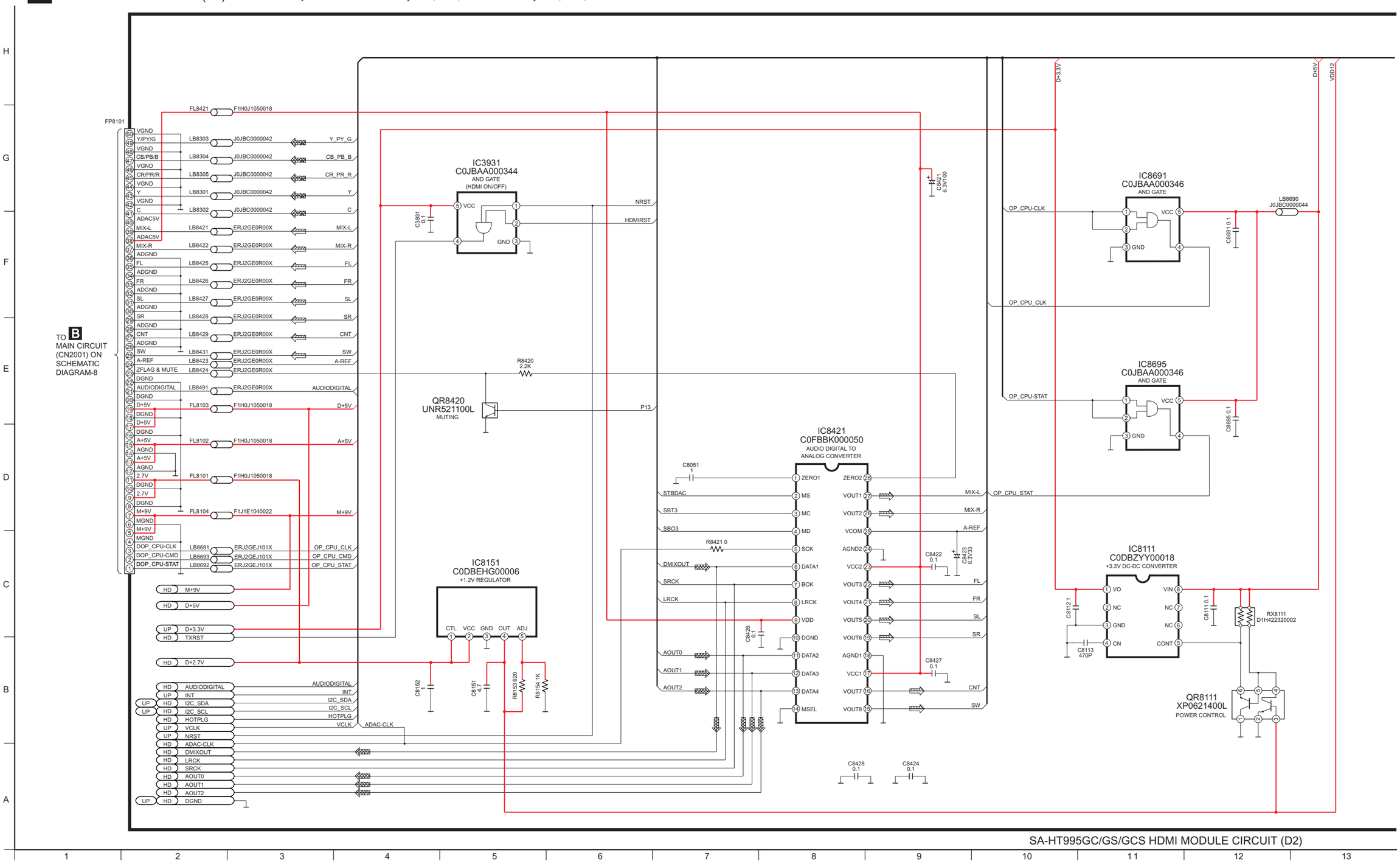

SA-HT995GC/GS/GCS HDMI MODULE CIRCUIT (D2)

SCHEMATIC DIAGRAM-3

A HDMI MODULE CIRCUIT (D2)

—— :+B SIGNAL LINE

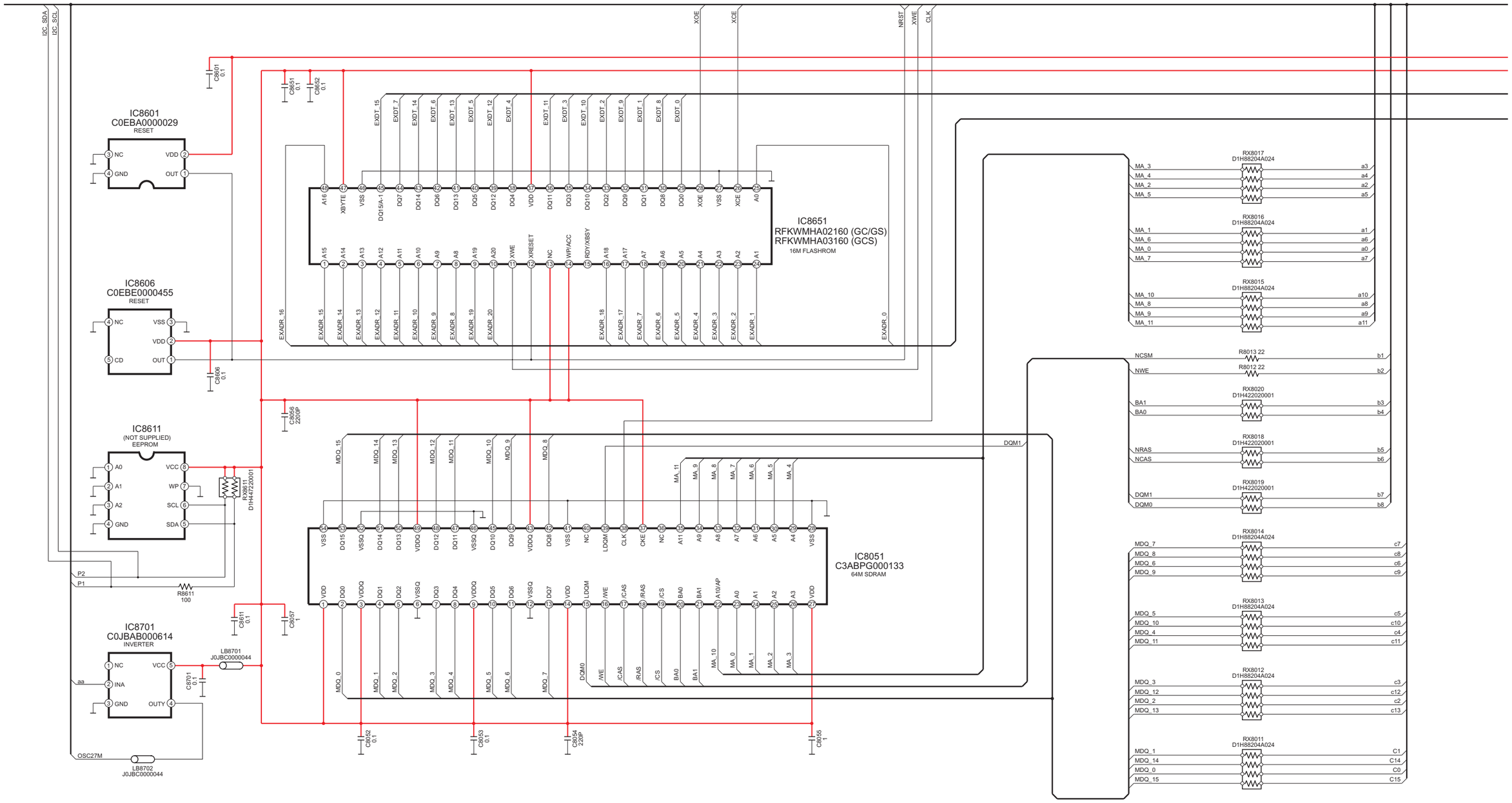

SA-HT995GC/GS/GCS HDMI MODULE CIRCUIT (D2)

14 | 15 | 16 | 17 | 18 | 19 | 20 | 21 | 22 | 23 | 24 | 25 | 26

SCHEMATIC DIAGRAM-4

A HDMI MODULE CIRCUIT (D2)

:CD-DA SIGNAL LINE :DVD(VIDEO) SIGNAL LINE :DVD(AUDIO) SIGNAL LINE :+B SIGNAL LINE

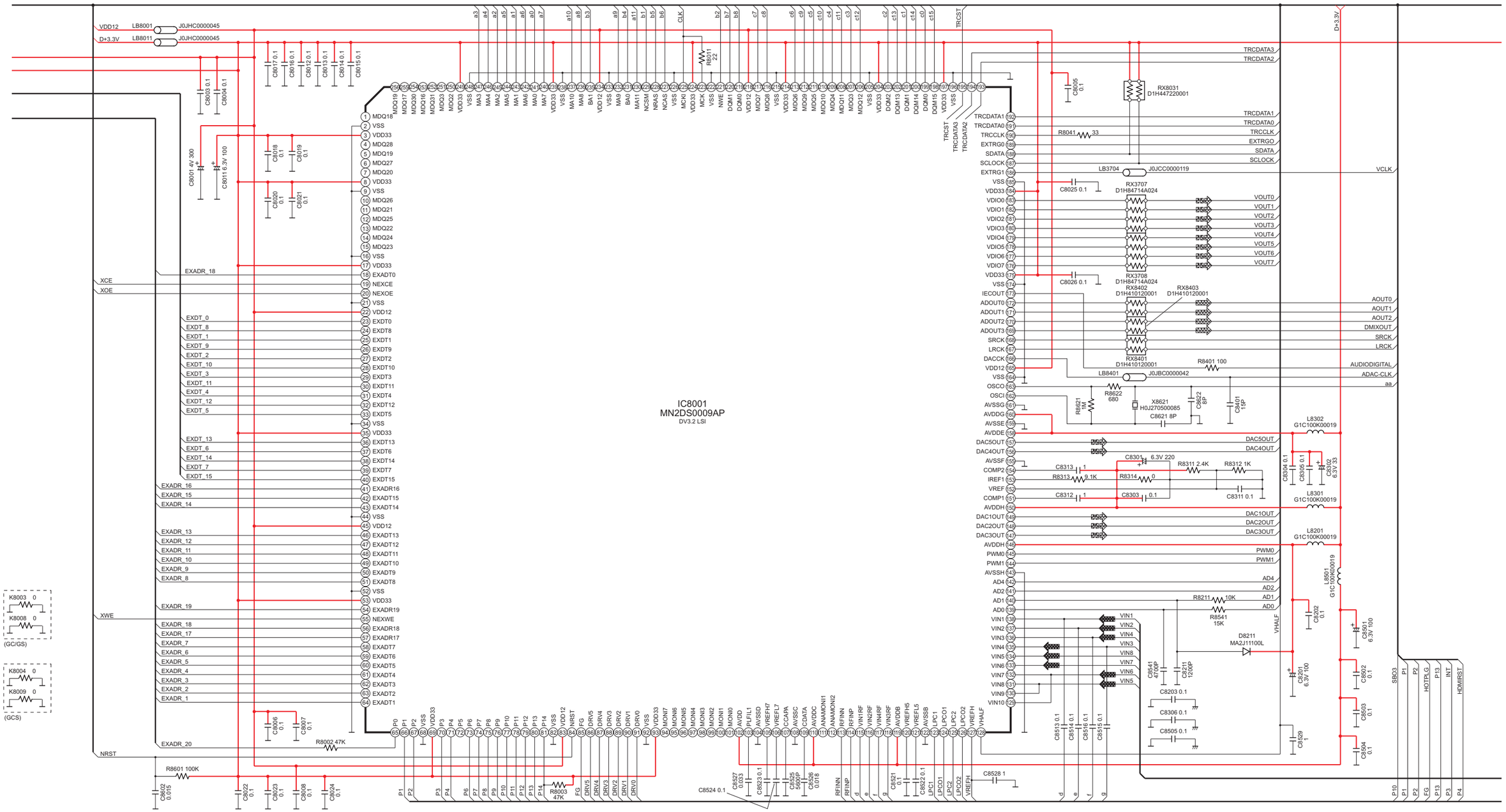

SCHEMATIC DIAGRAM-5

A HDMI MODULE CIRCUIT (D2)

:CD-DA SIGNAL LINE :DVD(VIDEO) SIGNAL LINE :+B SIGNAL LINE

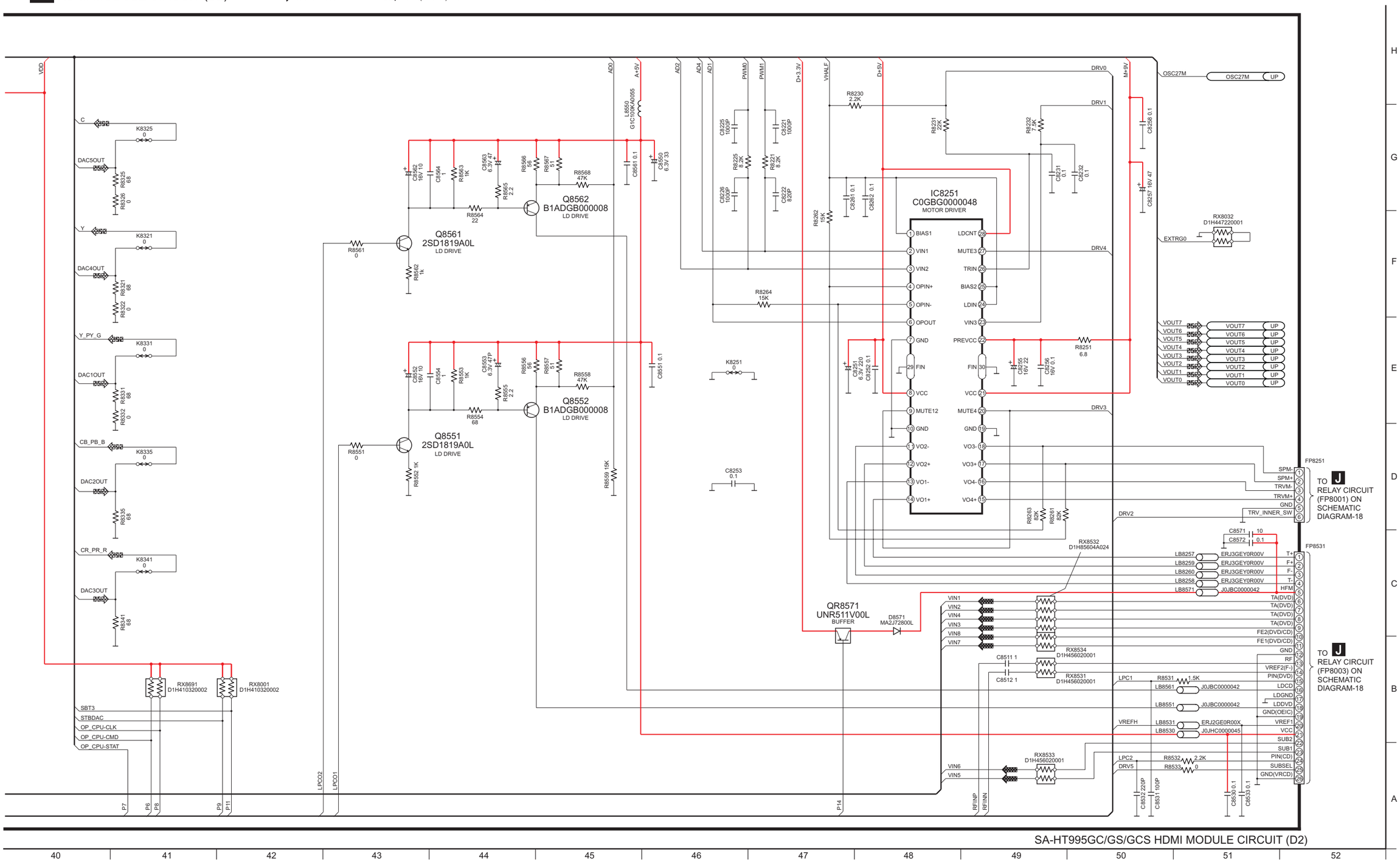

SA-HT995GC/GS/GCS HDMI MODULE CIRCUIT (D2)

SCHEMATIC DIAGRAM-6

A HDMI MODULE CIRCUIT (UP)

:DVD(VIDEO) SIGNAL LINE :+B SIGNAL LINE

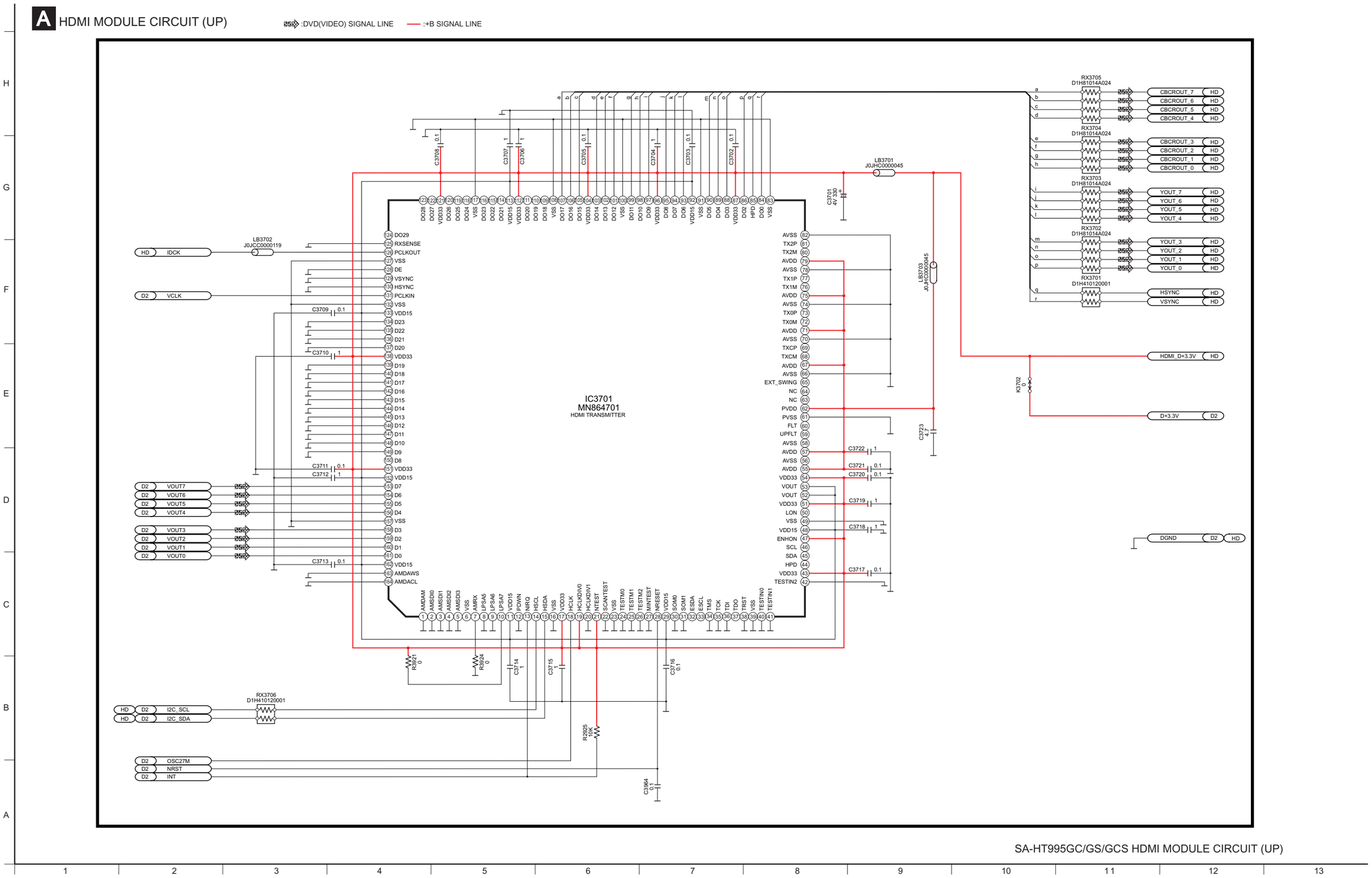

SA-HT995GC/GS/GCS HDMI MODULE CIRCUIT (UP)

SCHEMATIC DIAGRAM-7

A HDMI MODULE CIRCUIT (HD)

:DVD(VIDEO) SIGNAL LINE :DVD(AUDIO) SIGNAL LINE :MAIN SIGNAL LINE :+B SIGNAL LINE

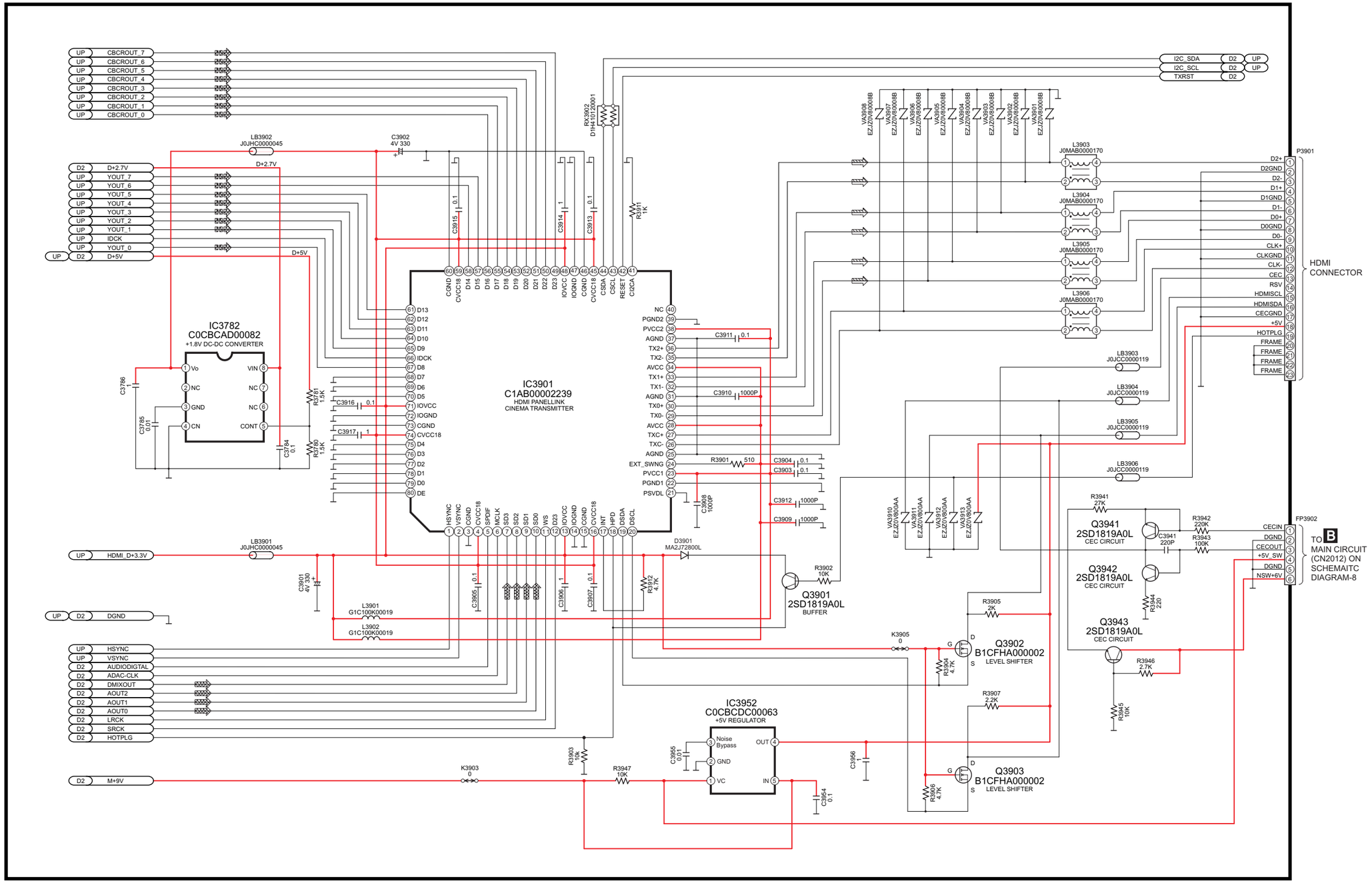

SA-HT995GC/GS/GCS HDMI MODULE CIRCUIT

20.2. (B) Main Circuit

SCHEMATIC DIAGRAM-8

B MAIN CIRCUIT

—— :+B SIGNAL LINE ---- :-B SIGNAL LINE : AUX SIGNAL LINE : MUSIC PORT SIGNAL LINE : DVD VIDEO SIGNAL LINE : FM /AM SIGNAL LINE

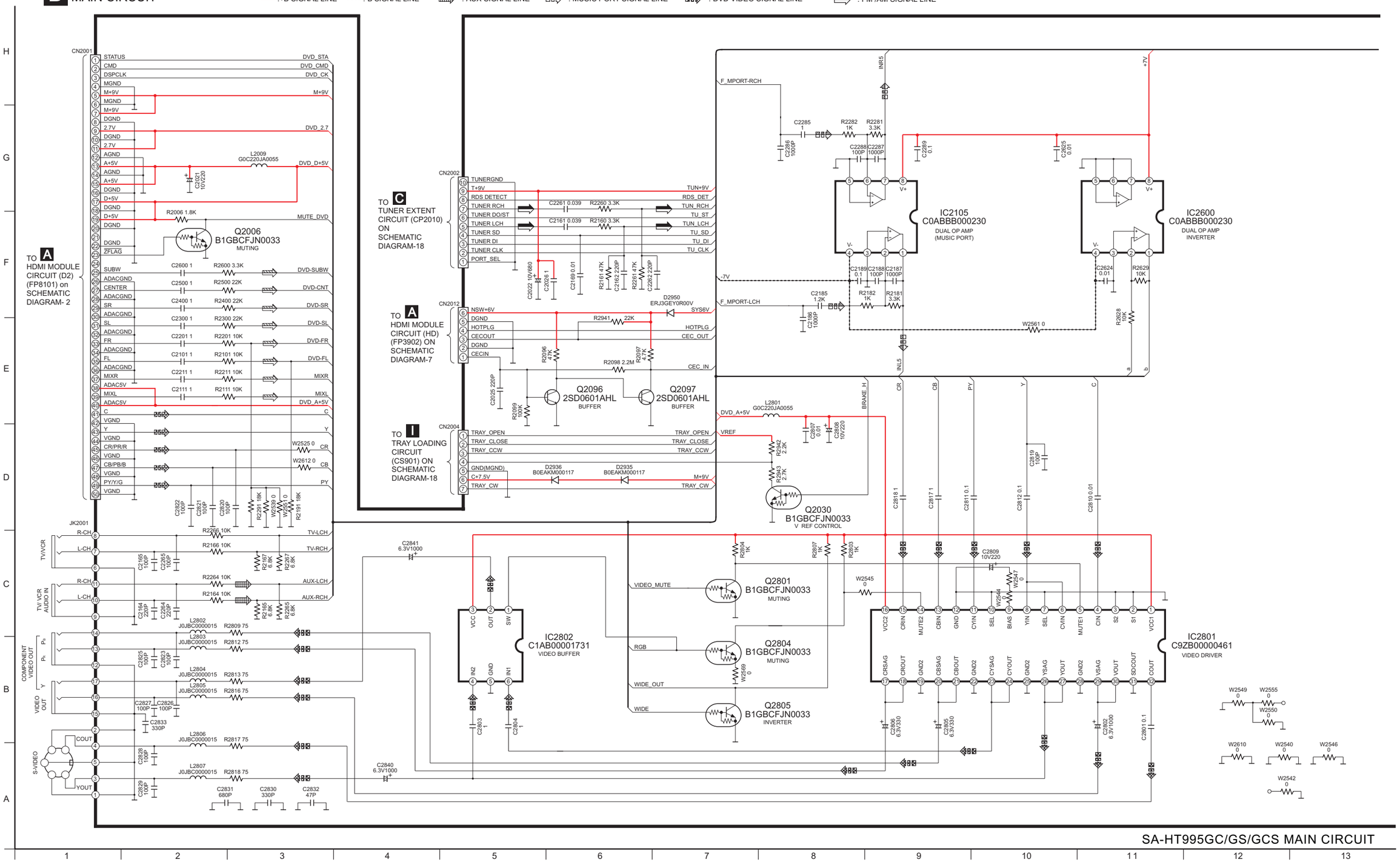

SCHEMATIC DIAGRAM-9

B MAIN CIRCUIT

:+B SIGNAL LINE

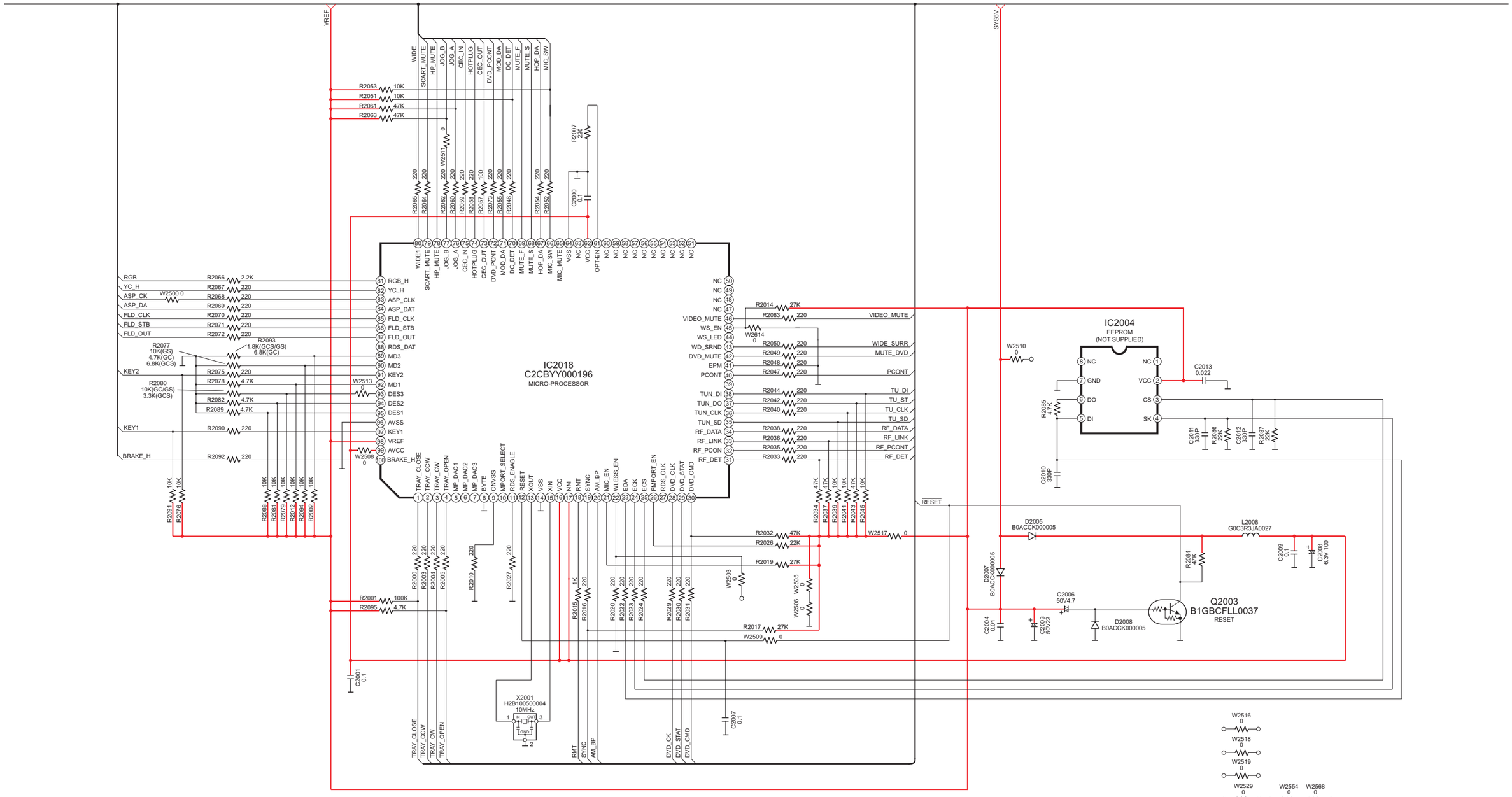

SA-HT995GC/GS/GCS MAIN CIRCUIT

SCHEMATIC DIAGRAM-10

B MAIN CIRCUIT

—— :+B SIGNAL LINE - - - - :-B SIGNAL LINE : MAIN SIGNAL LINE : AUX SIGNAL LINE : FM /AM SIGNAL LINE : MUSIC PORT SIGNAL LINE

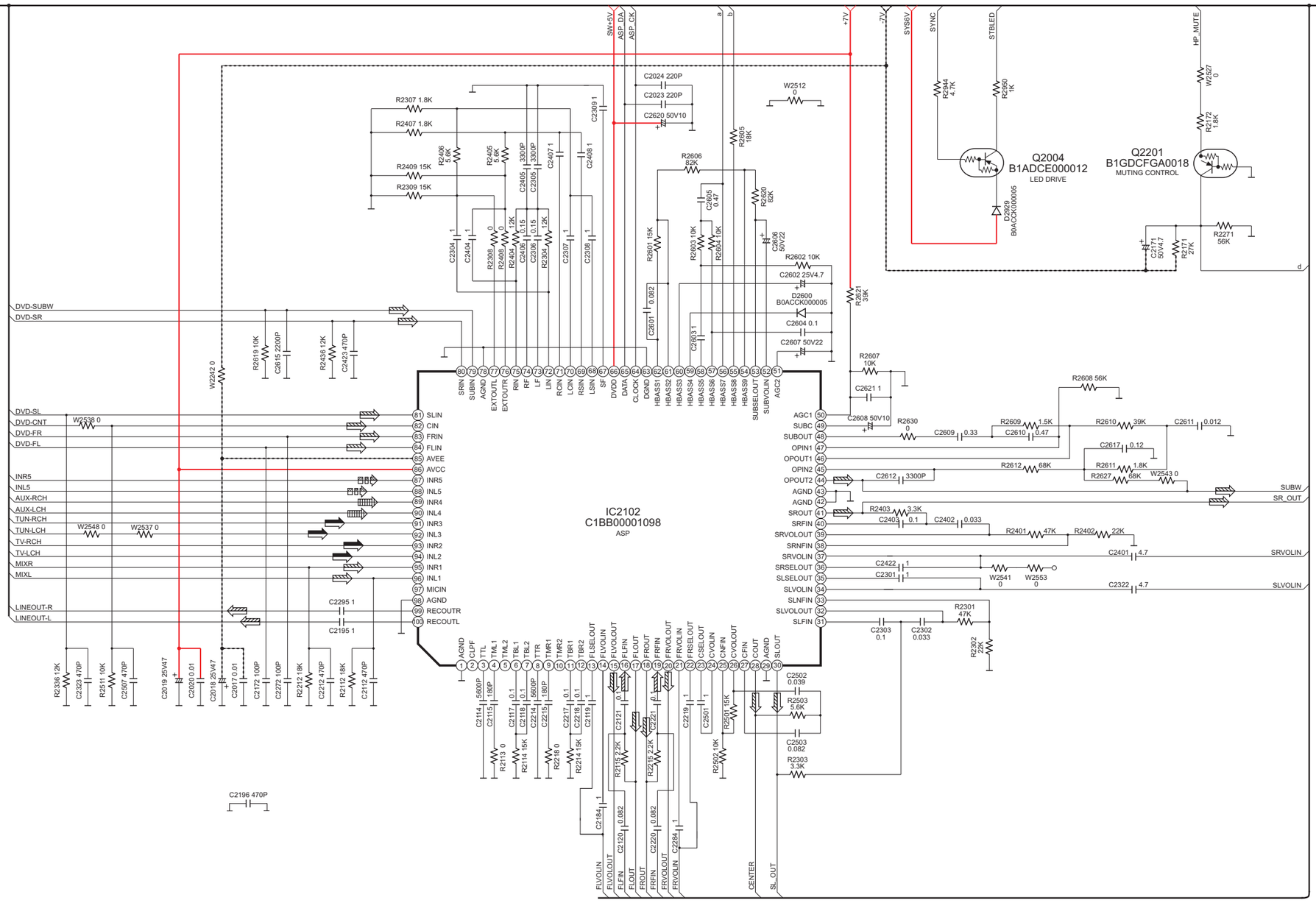

SA-HT995GC/GS/GCS MAIN CIRCUIT

SCHEMATIC DIAGRAM-11

B MAIN CIRCUIT

— :+B SIGNAL LINE ---- :-B SIGNAL LINE ⇨ : MAIN SIGNAL LINE

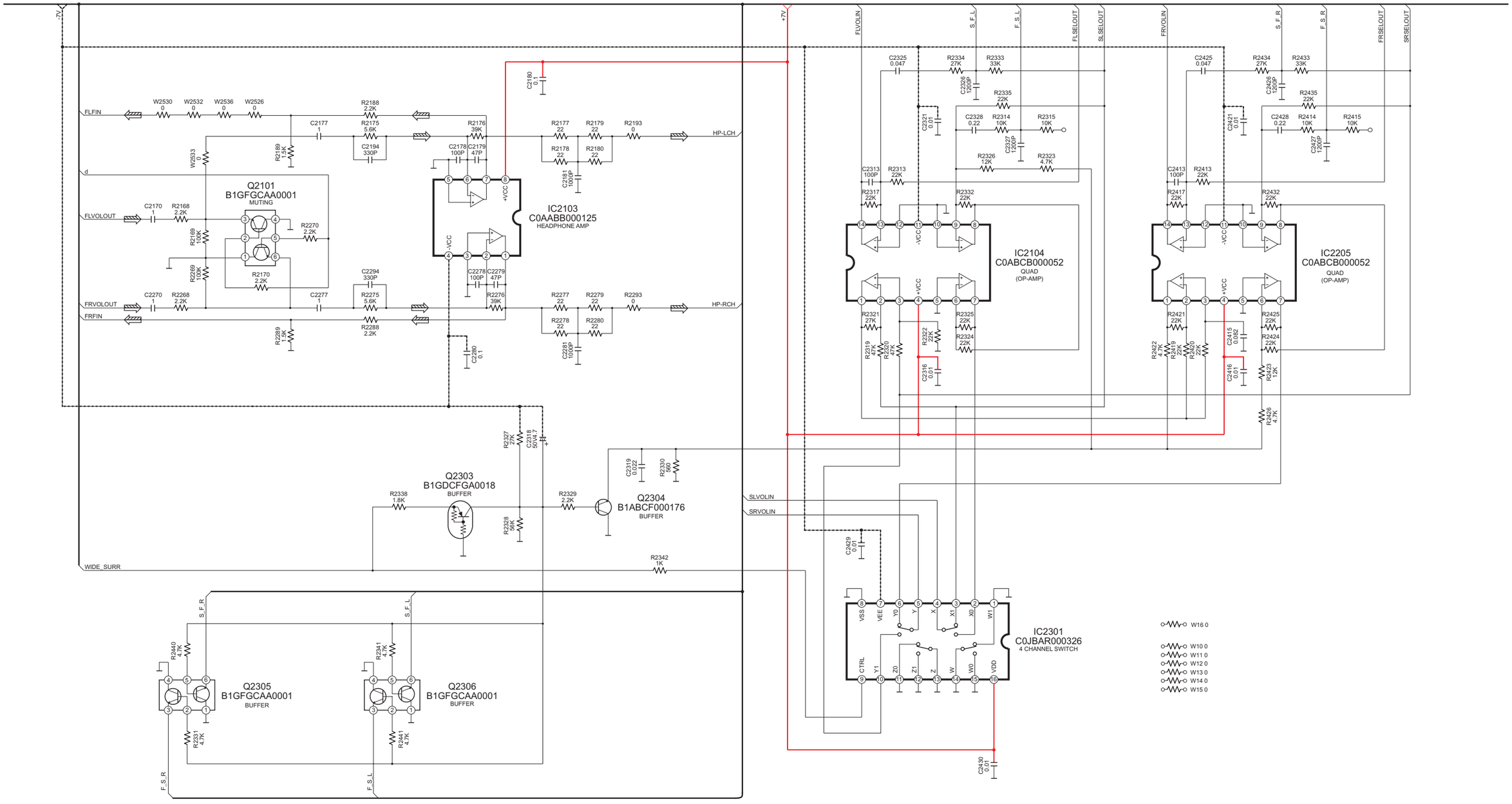

SA-HT995GC/GS/GCS MAIN CIRCUIT

40	41	42	43	44	45	46	47	48	49	50	51	52

SCHEMATIC DIAGRAM-12

B MAIN CIRCUIT

—— :+B SIGNAL LINE ---- :-B SIGNAL LINE ⇨ : MAIN SIGNAL LINE ⇨ : MUSIC PORT SIGNAL LINE ⇨ : DVD VIDEO SIGNAL LINE

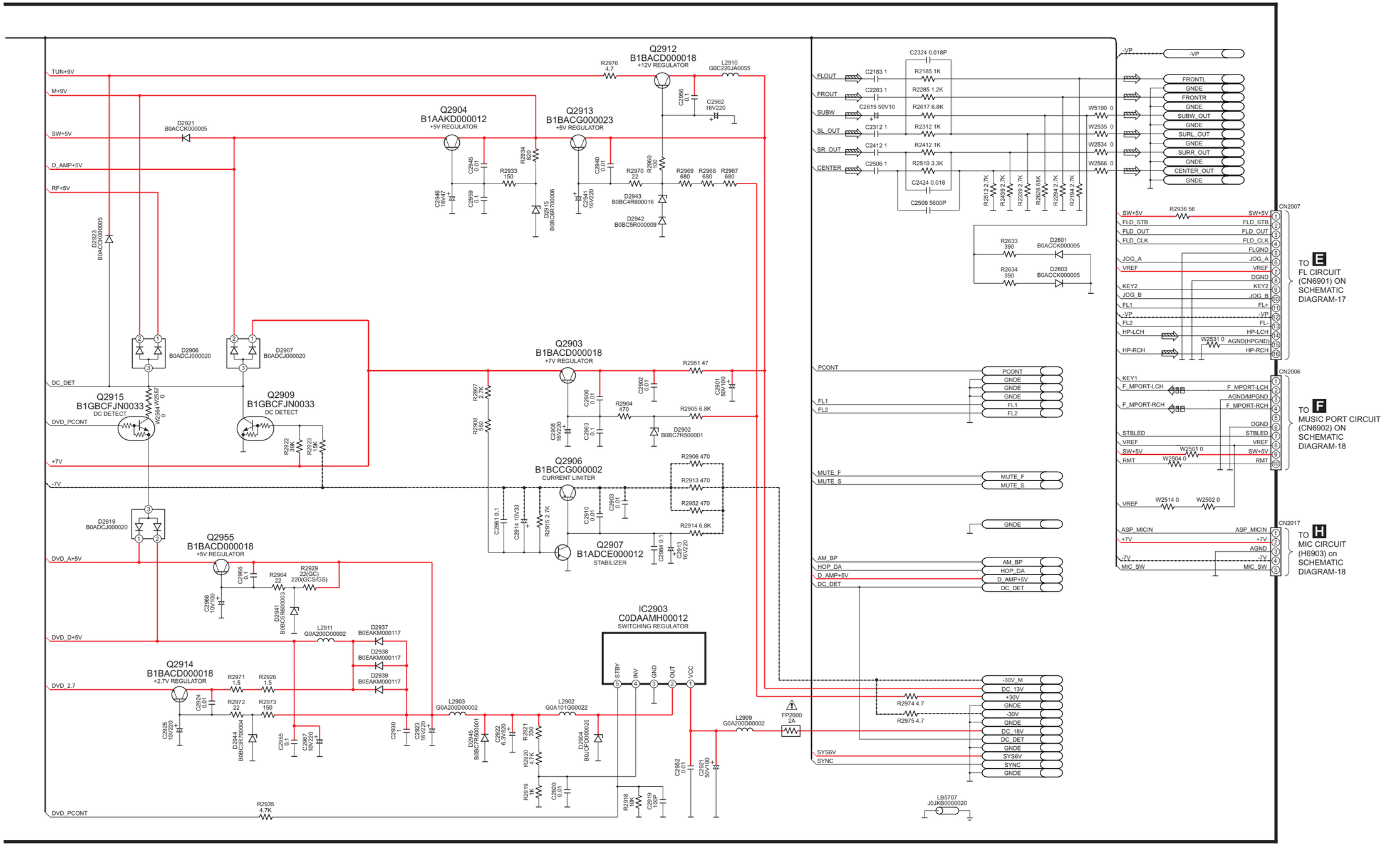

SA-HT995GC/GS/GCS MAIN CIRCUIT

53 | 54 | 55 | 56 | 57 | 58 | 59 | 60 | 61 | 62 | 63 | 64 | 65

20.3. (C) Power, AC-inlet & Voltage Selector Circuit

SCHEMATIC DIAGRAM-13

B POWER(DIGITAL AMP) CIRCUIT

:MAIN SIGNAL LINE — :+B SIGNAL LINE ---- :-B SIGNAL LINE

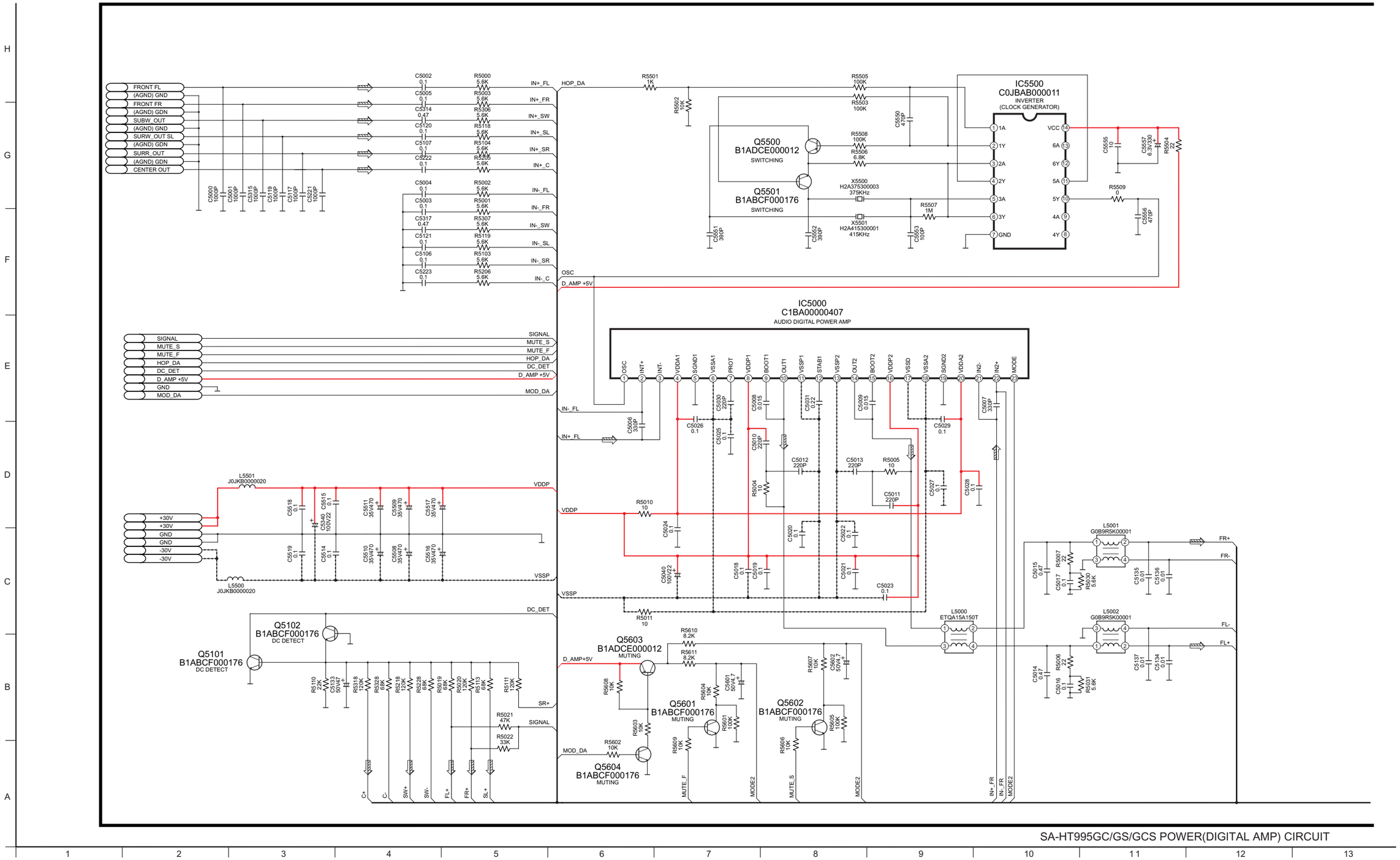

SA-HT995GC/GS/GCS POWER(DIGITAL AMP) CIRCUIT

SCHEMATIC DIAGRAM-14

B POWER(DIGITAL AMP) CIRCUIT

:MAIN SIGNAL LINE — :+B SIGNAL LINE ---- :-B SIGNAL LINE

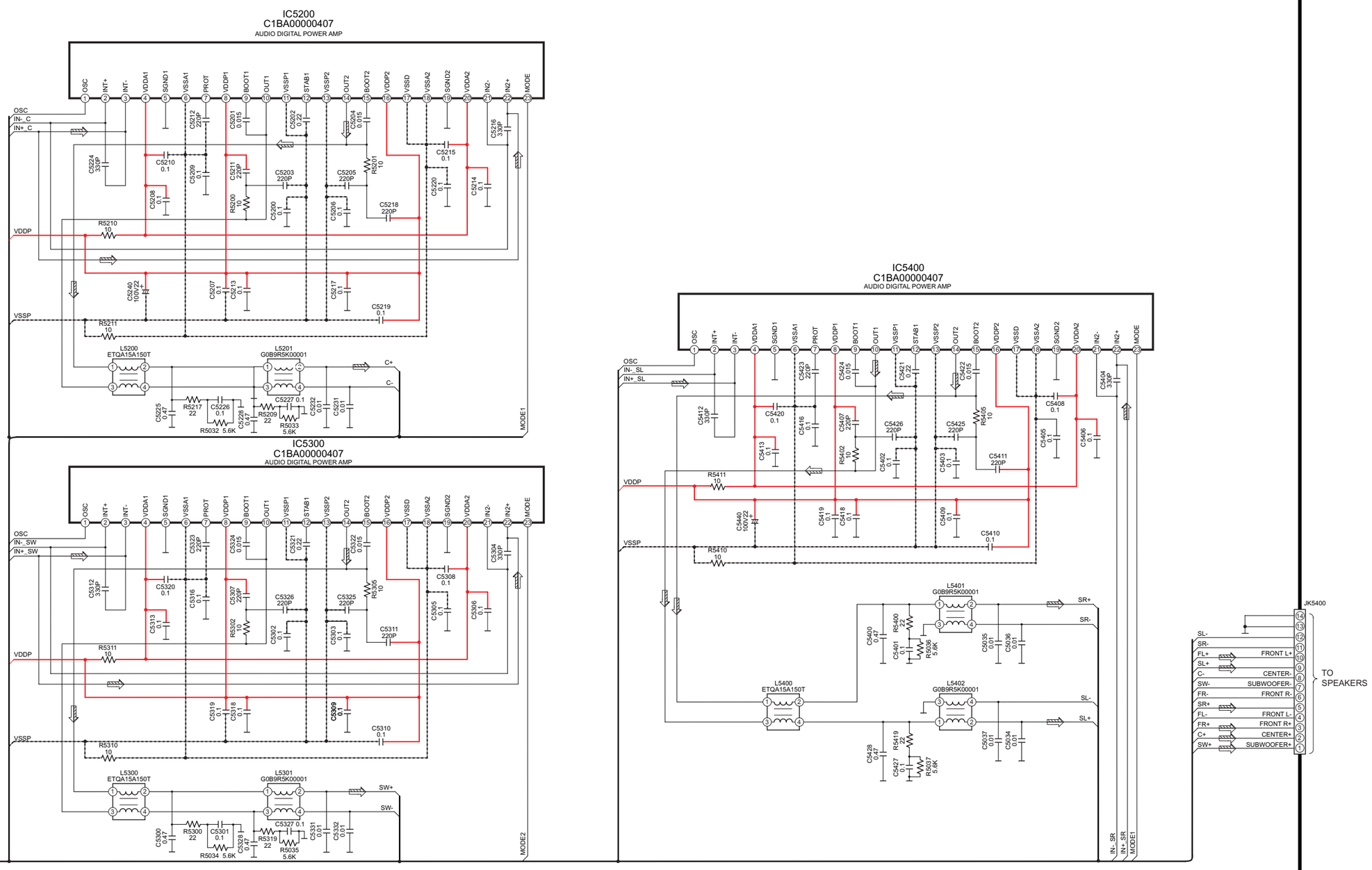

SA-HT995GC/GS/GCS POWER(DIGITAL AMP) CIRCUIT

SCHEMATIC DIAGRAM-15

B POWER(SMPS) CIRCUIT

:+B SIGNAL LINE :-B SIGNAL LINE

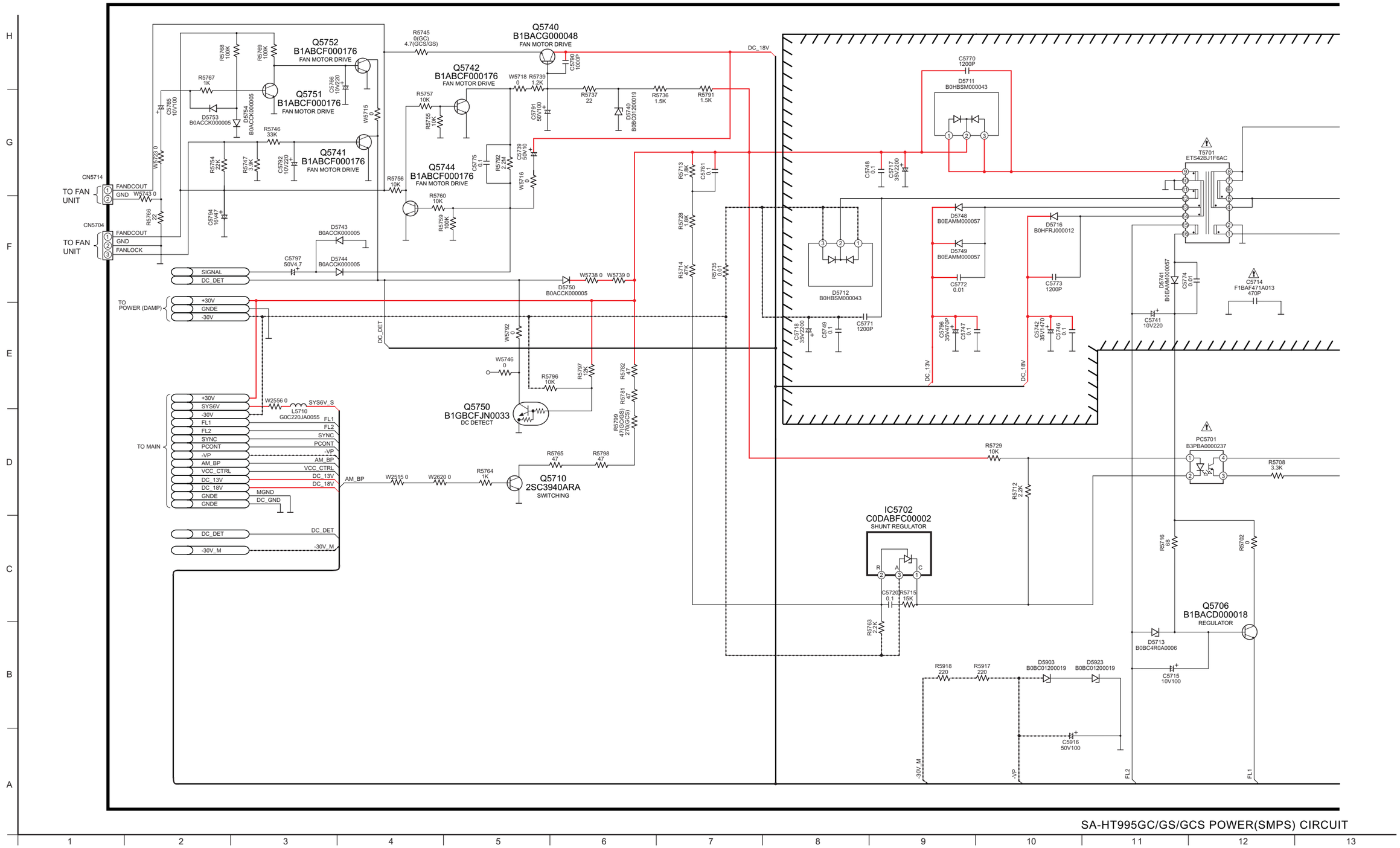

SA-HT995GC/GS/GCS POWER(SMPS) CIRCUIT

SCHEMATIC DIAGRAM-16

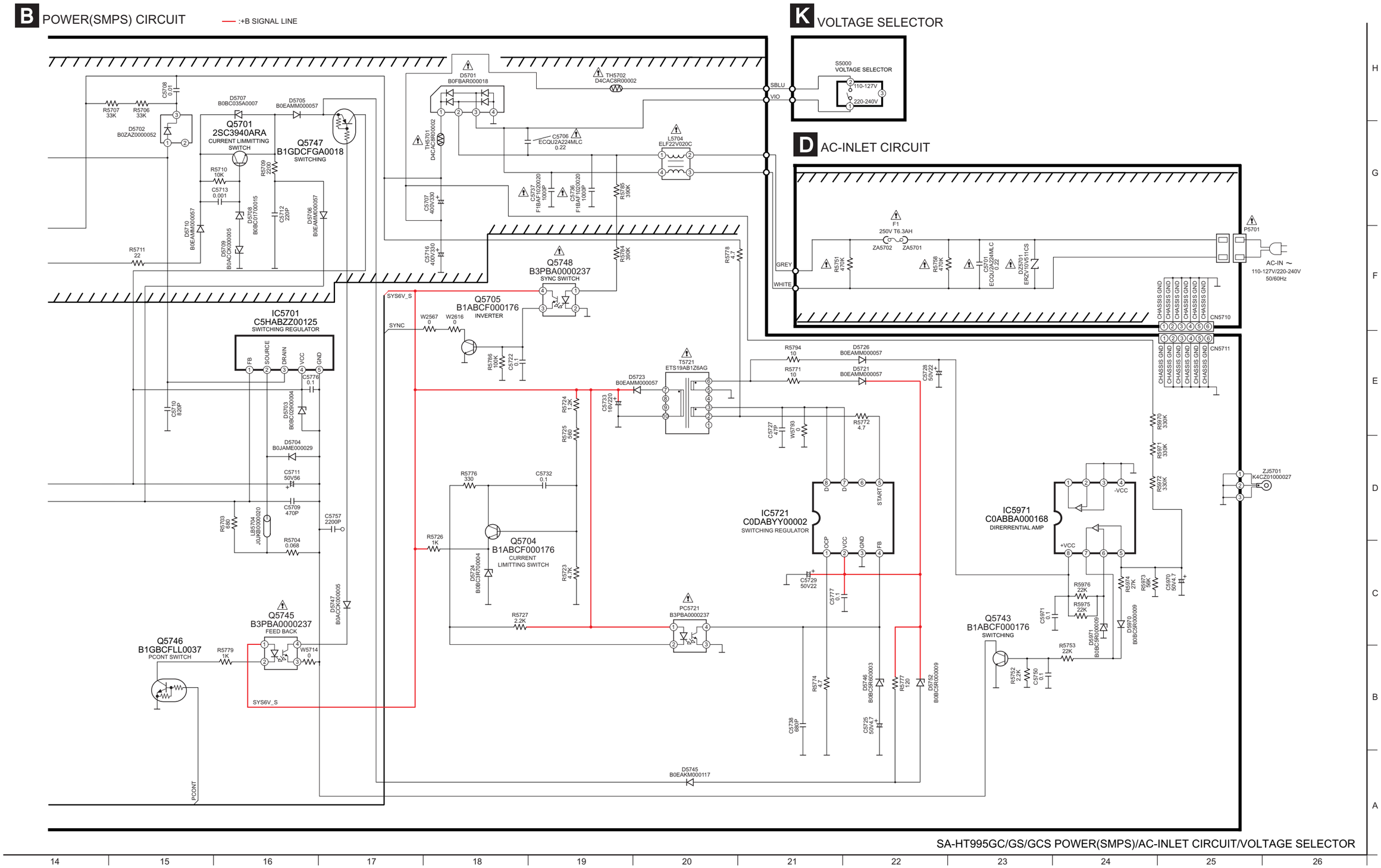

SA-HT995GC/GS/GCS POWER(SMPS)/AC-INLET CIRCUIT/VOLTAGE SELECTOR

20.4. (D) FL, Top Button, Tuner Extent, Tray Loading, Mic, Music Port & Relay Circuit

SCHEMATIC DIAGRAM-17

E FL CIRCUIT

:+B SIGNAL LINE :-B SIGNAL LINE : MAIN SIGNAL LINE

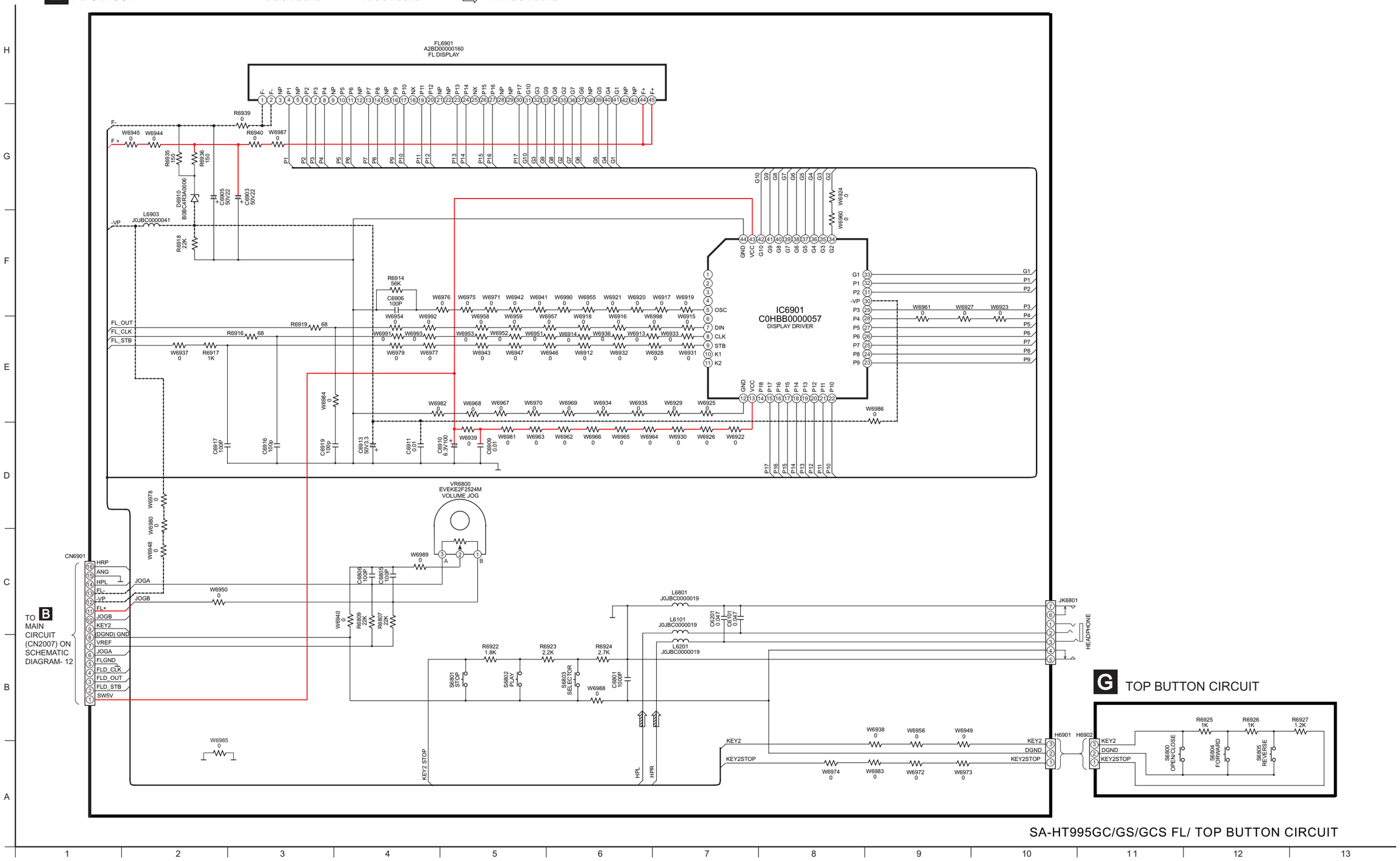

SA-HT995GC/GS/GCS FL/ TOP BUTTON CIRCUIT

SCHEMATIC DIAGRAM-18

I TRAY LOADING CIRCUIT

:+B SIGNAL LINE :-B SIGNAL LINE :MAIN SIGNAL LINE : FM /AM SIGNAL

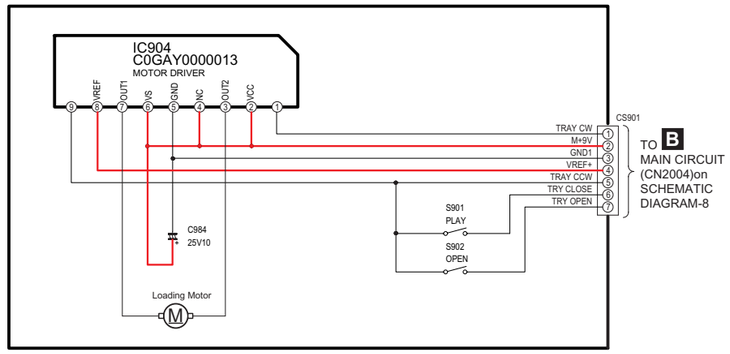

J RELAY CIRCUIT

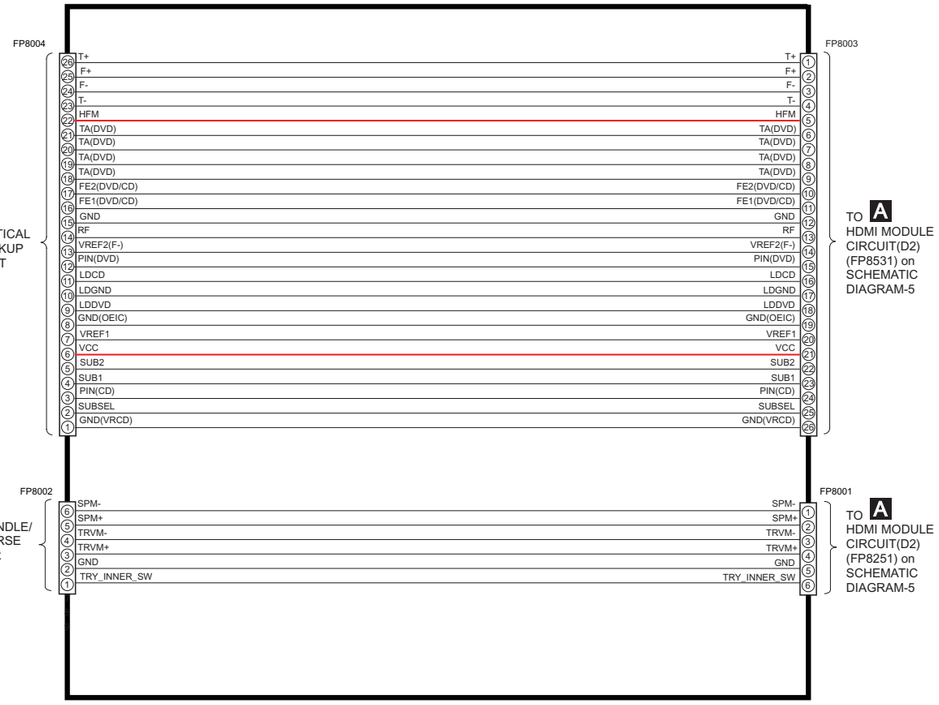

C TUNER EXTENT CIRCUIT

: MUSIC PORT SIGNAL LINE

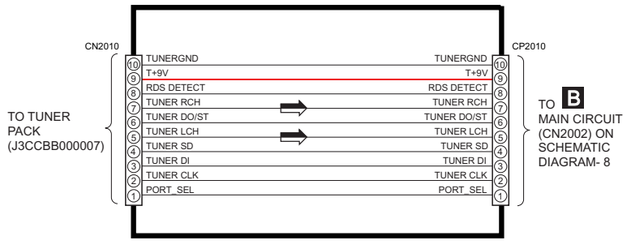

H MIC CIRCUIT

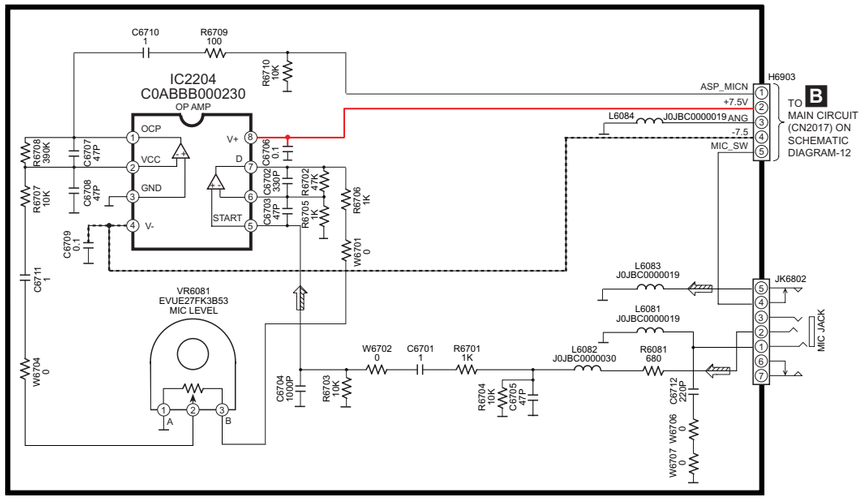

F MUSIC PORT CIRCUIT

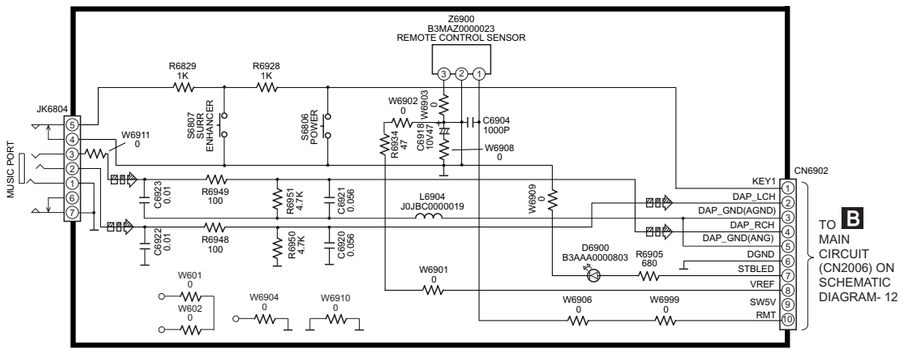

SA-HT995GC/GS/GCS TUNER EXTENT/ MUSIC PORT/ TRAY LOADING/ MIC/ RELAY CIRCUIT

21 Printed Circuit Board

21.1. (A) HDMI Module P.C.B.

A HDMI MODULE P.C.B. (REP4034D...GC/GS,REP4034E...GCS)

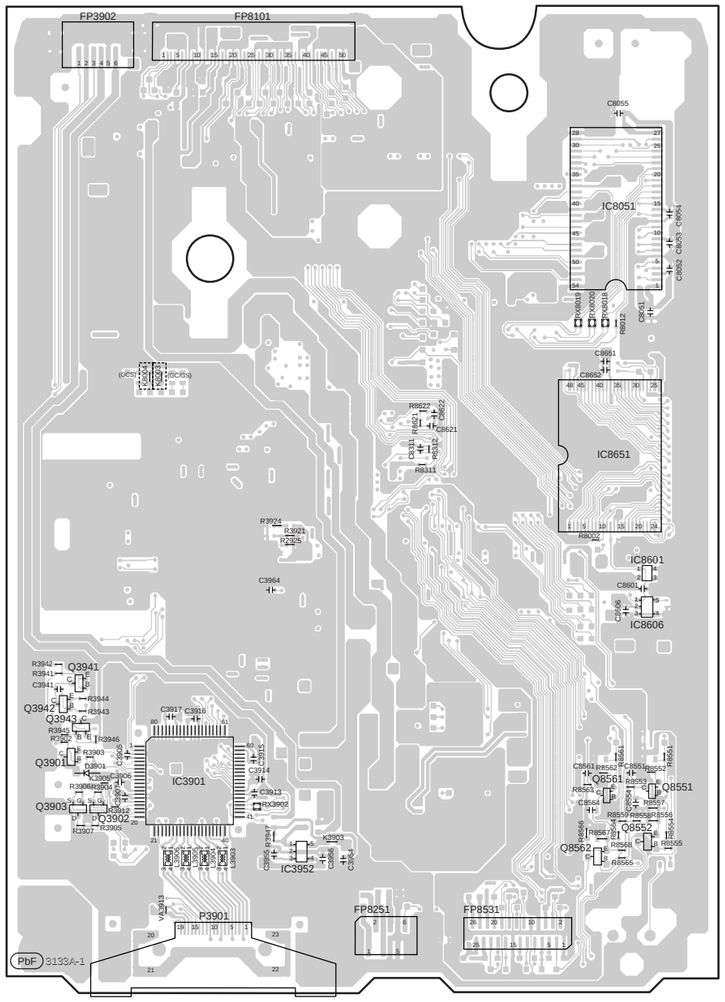

(SIDE A)

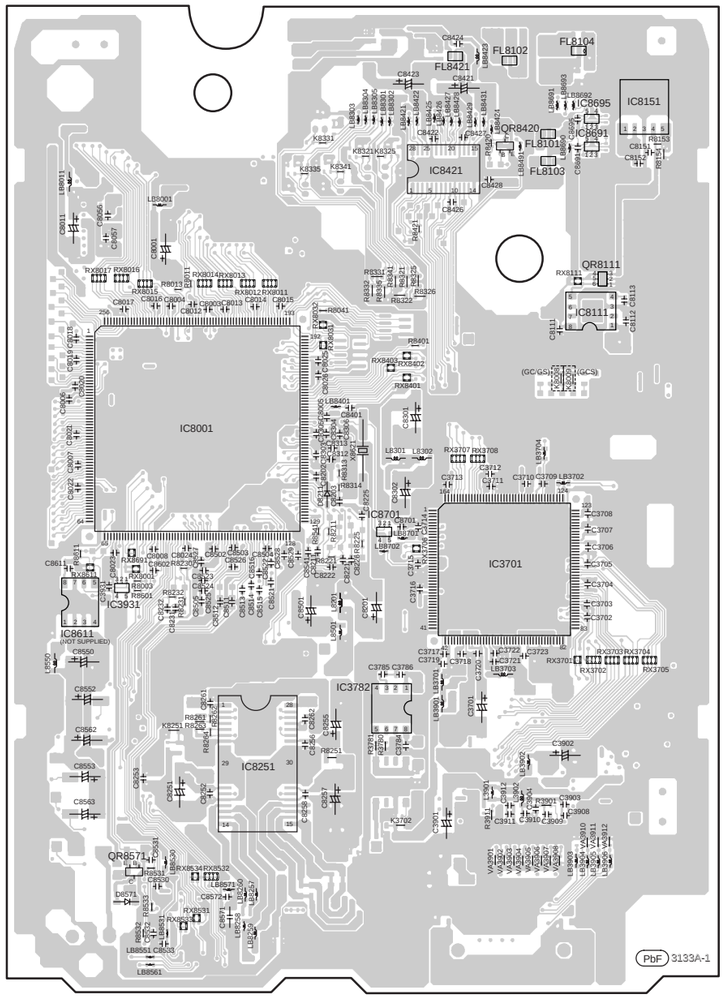

(SIDE B)

SA-HT995GC/GCS/GS HDMI MODULE P.C.B.

21.2. (B) Main/Power P.C.B.

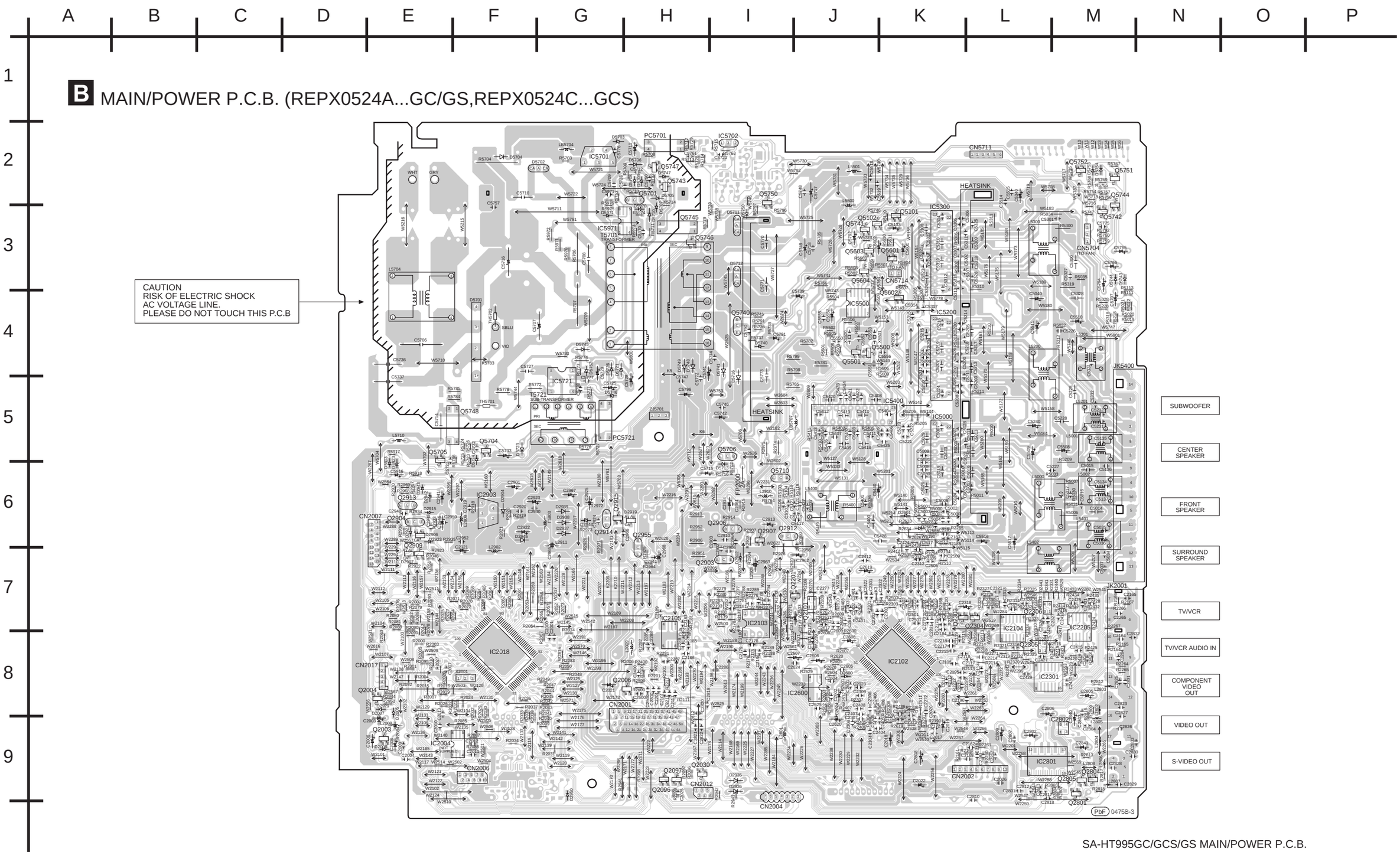

SA-HT995GC/GCS/GS MAIN/POWER P.C.B.

21.3. (C) Tuner extent, AC-inlet, FL, Music port & Top button P.C.B.

C TUNER EXTENT P.C.B. (REPX0524A...GC/GS, REPX0524C...GCS,)

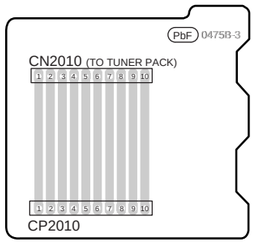

D AC-INLET P.C.B. (REPX0524A...GC/GS, REPX0524C...GCS,)

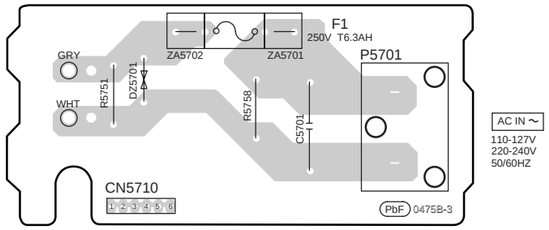

E FL P.C.B. (REPX0512B)

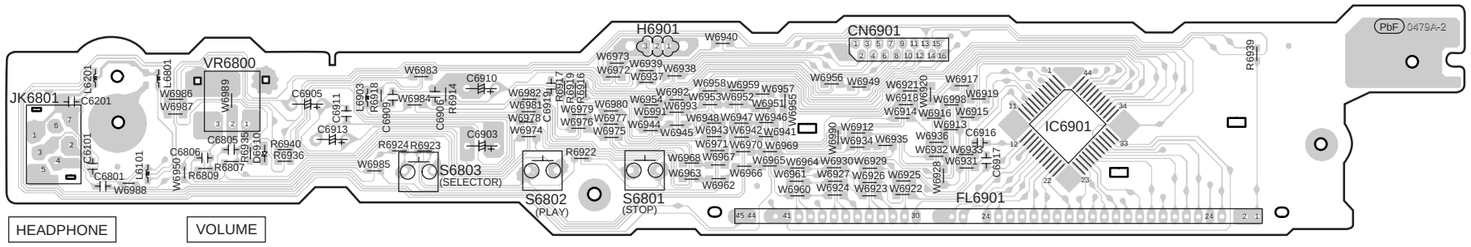

F MUSIC PORT P.C.B. (REPX0512B)

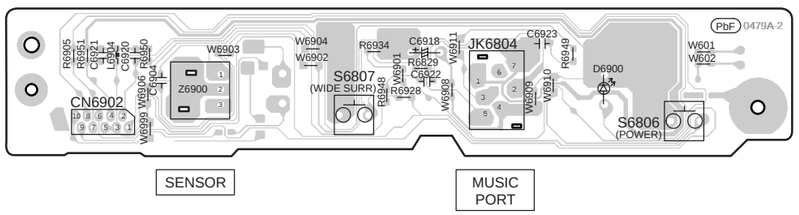

G TOP BUTTON P.C.B. (REPX0512B)

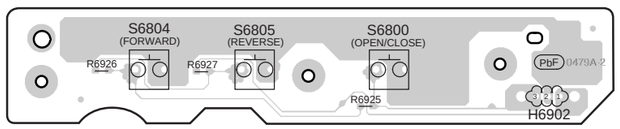

SA-HT995GC/GCS/GS TUNER EXTENT/AC-INLET/FL/MUSIC PORT/TOP BUTTON P.C.B.

21.4. (D) Mic, Tray Loading, Voltage Selector & Relay P.C.B.

A B C D E F G H I J K L M N O P

1 2 3 4 5 6 7 8 9

H MIC P.C.B. (REPX0539A)

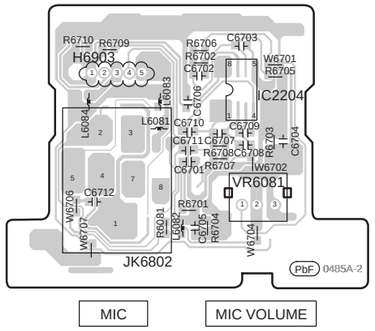

I TRAY LOADING P.C.B. (REP3288B)

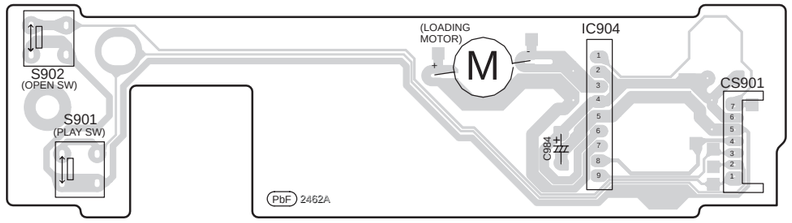

J RELAY P.C.B. (REPX0530A)

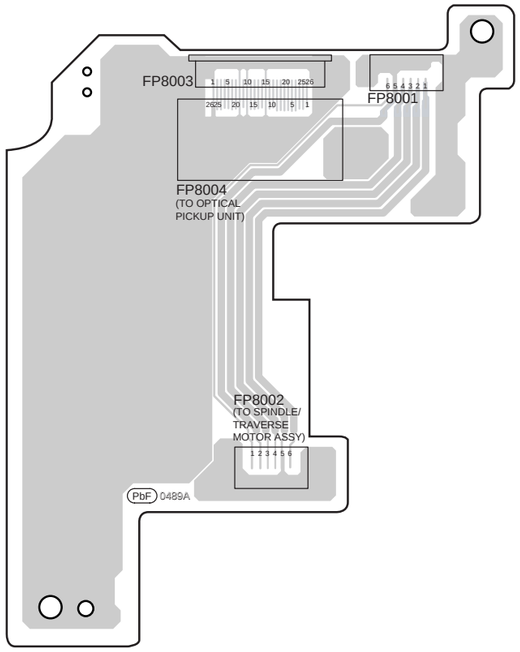

K VOLTAGE SELECTOR P.C.B. (REPX0524A...GC/GS, REPX0524C...GCS)

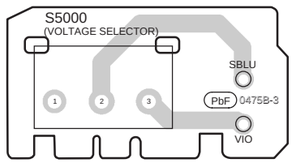

SA-HT995GC/GCS/GS MIC/TRAY LOADING/RELAY/VOLTAGE SELECTOR P.C.B.

22 Basic Troubleshooting Guide

22.1. Basic Troubleshooting Guide for Traverse Unit (HDMI Module P.C.B)

Problems	Checking Points	Checking components
1) Distorted picture or abnormal sound is heard during initialisation	a) Check SDRAM address, data bus, CLK and other control signals waveform	IC8051
	b) Check video signals	LB8301, R8321, R8322, LB8302, R8325, R8326
	c) Check audio DAC circuitry *Compare the above with OK condition Module	IC8421 *Check for solder short and/or component missing/damaged
2) No TOC/Long TOC	a) Check motor driver circuitry (voltages)	IC8251
	b) Check laser drive circuitry (voltages and current)	Q8550, Q8551, Q8552, Q8560, Q8561, Q8562
	c) Check LSI connection to motor drive circuitry *Compare the above with OK condition Module	IC8001 *Check for solder short and/or component missing/damaged
3) Disc not spinning 4) Traverse not moving 5) Traverse and spindle abnormal movement	a) Check connection from Backend Module to Traverse unit	FP8201
	b) Check motor driver circuitry on voltages and control signals *Compare the above with OK condition Module	IC8251 *Check for solder short and/or component damaged
6) Cannot read disc but spindle is spinning - Cannot read CD - Cannot read DVD	a) Check laser drive circuitry (voltages and current) - Check CD laser drive - Check DVD laser drive *Check voltages and LD current and compare with OK Module	Q8550, Q8551, Q8552, Q8560, Q8561, Q8562 Q8550, Q8560, Q8561, Q8562 Q8550, Q8551, Q8552, Q8560 *Check for solder short and/or component missing/damaged
7) Block noise during play	a) Check SDRAM address and data bus signal *Compare the above with OK condition Module	IC8051 *Check for solder short and/or component damaged

Problems	Checking Points	Checking components
8) Jitter out of specification	a) Check LD current b) Check OPU (change to other unit and confirm)	OPU unit (FFC connection)

22.2. Basic Troubleshooting Guide for HDMI AV output

Problems	Checking Points	Checking components
1) TV does not have display. Set FL display shows U702 / U703.	1) Check setting of the set in Setup Menu whether HDMI video output is turned ON.	
	2) +5V supply to TV	IC3952 (Pin 4)
	3) HDMI Connector Solderbility condition	P3901
	4) HDMI Output TMDS signal lines - Data - Clock	 L3903, L3904, L3905 L3906
	5) HDMI Transmitter communication lines to TV - Data , SDA - Clock, SCL	 LB3905, R3905, Q3902, R3904 LB3904, R3907, Q3903, R3906
	6) HDMI Transmitter communication lines from LSI	RX3902
	7) Local Port Slave Address setting resistor	R3921
	8) HDMI Transmitter +3.3V supply	LB3901, L3901, L3902
	9) HDMI Transmitter +1.8V supply	IC3782 (Pin1), LB3902
	10) HDMI Up-con +3.3V supply	LB3701
	11) HDMI Pixel clock output from Up-Con to HDMI Transmitter	LB3702
	12) Up-Con IC I2C Data and Clock Line	RX3706
	13) Hot-Plug signal	LB3906, R3902, R3903, Q3901, D3901
	14) TMDS output swing amplitude control resistor	R3901
	15) Host Interface External Input Clock from LSI (IC8001) to Up-Con IC (IC3701)	LB8702
	16) Video data lines from LSI (IC8001) to Up-Converter (IC3701)	RX3707, RX3708, RX3701
2) When switching the video output mode from 480p to 720p / 1080i, the TV display becomes blank.	1) Supply for IC3701 up-conversion pin - Pins : 55, 57, 62, 67, 71, 75, 79	LB3703
3) Picture shown on TV not clear / sharp	1) Up-Converter (IC3701) Luminance output	RX3702
4) Colour Problem. TV Screen is White / Blue / Purple.	1) Up-Converter (IC3701) Component Y, Pb, Pr output	RX3703, RX3704, RX3705
5) HDMI got no audio output.	1) Audio Data Lines	RX8403, RX8402 *Check for solder short and/or component missing/damaged as well as signal condition

23 Overall Block (HT995)

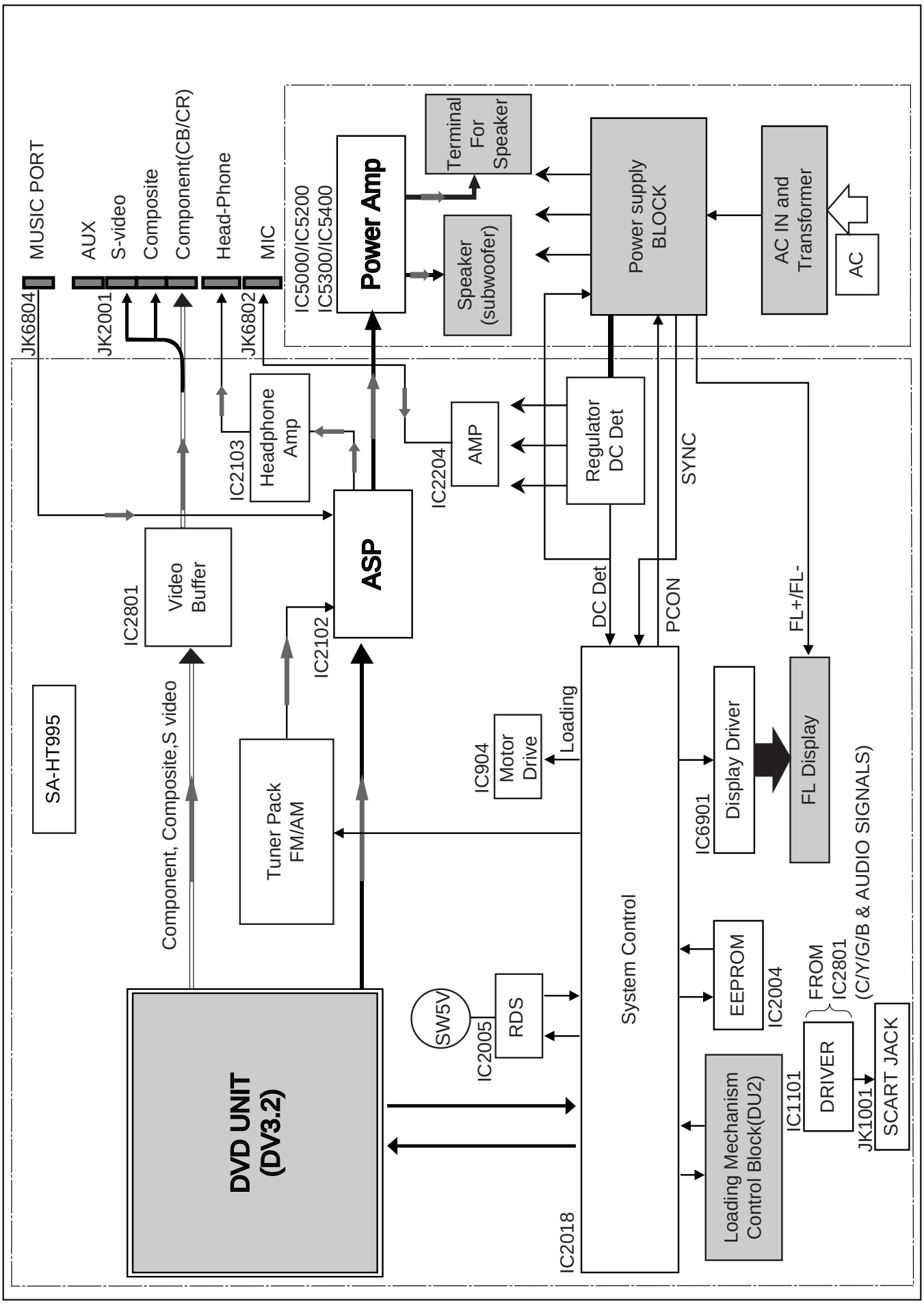

23.1. HT995 DVD Unit Block

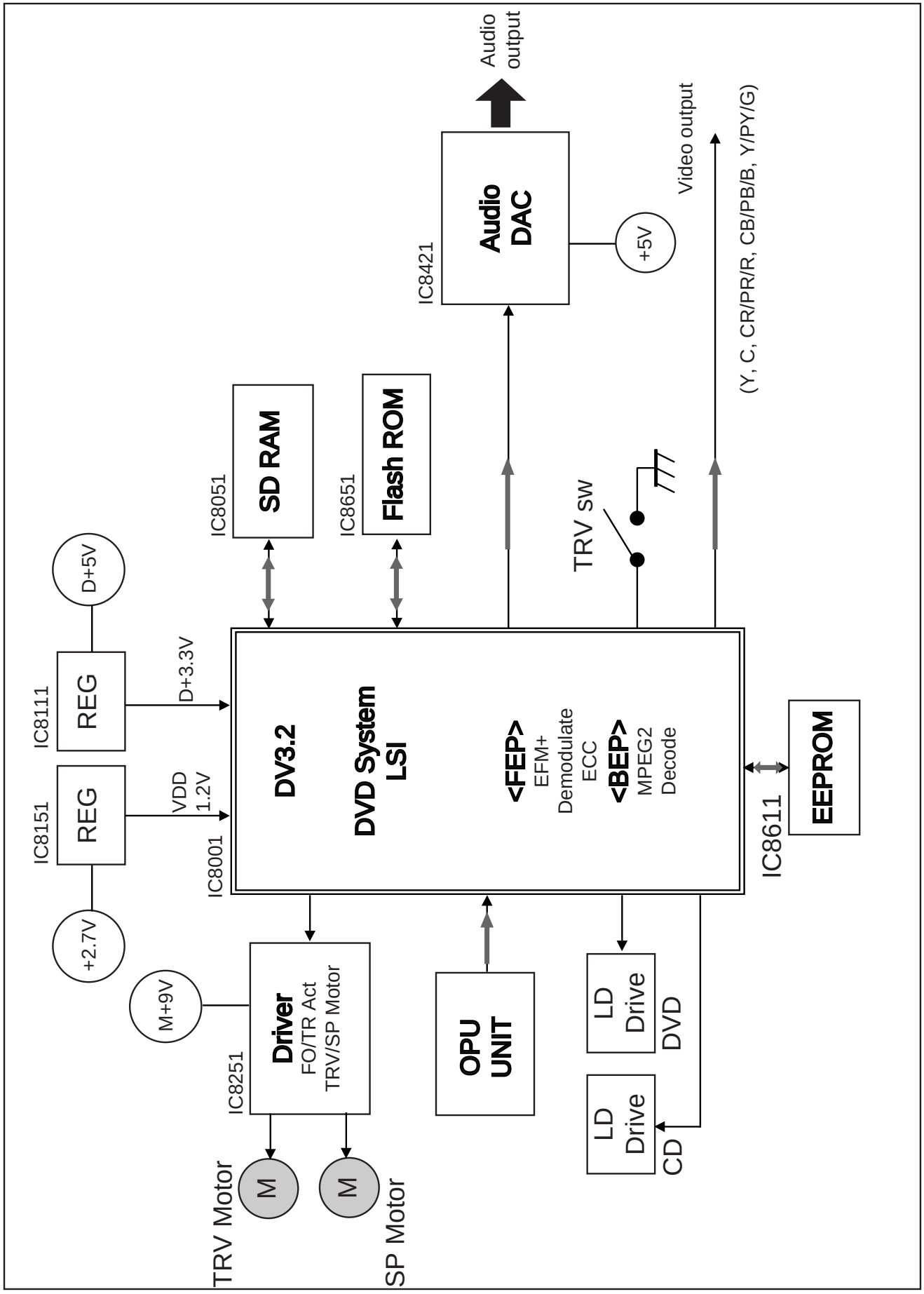

23.2. HT995 Block (Analog Signal : DVD 5.1ch Play Back Mode)

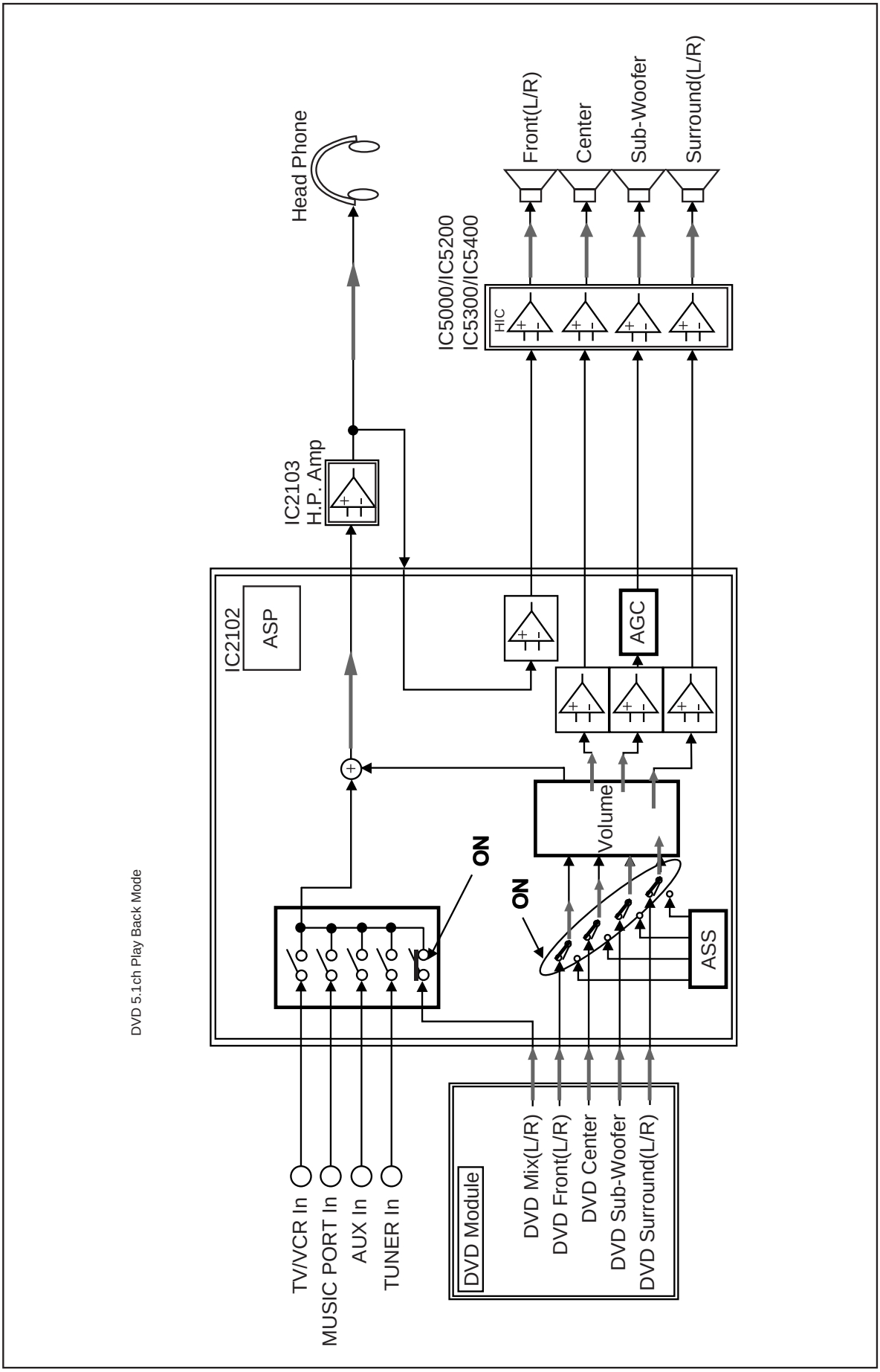

23.3. HT995 Block (Analog Signal : 2ch Analog Input Mode)

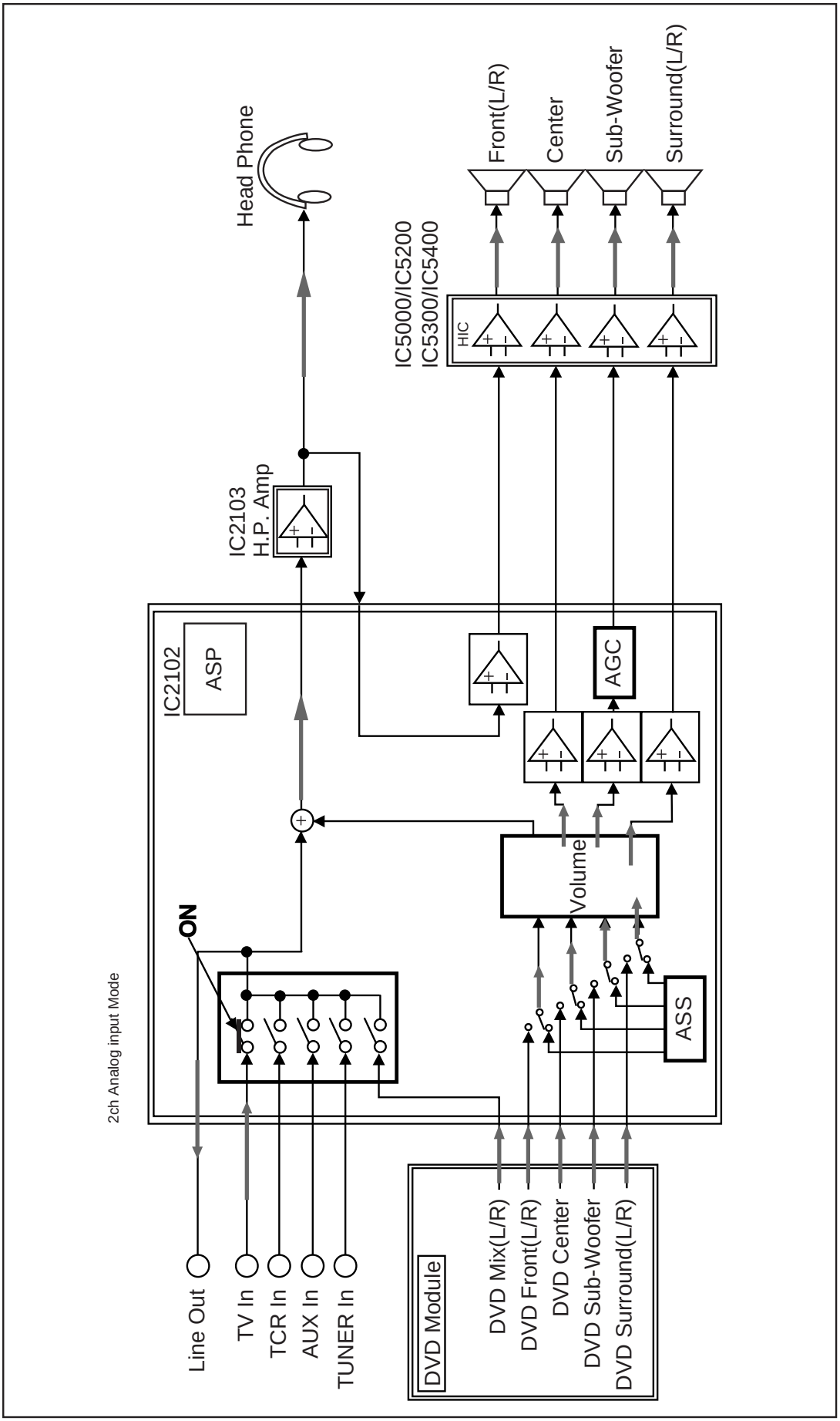

23.4. HT995 Power Supply Block

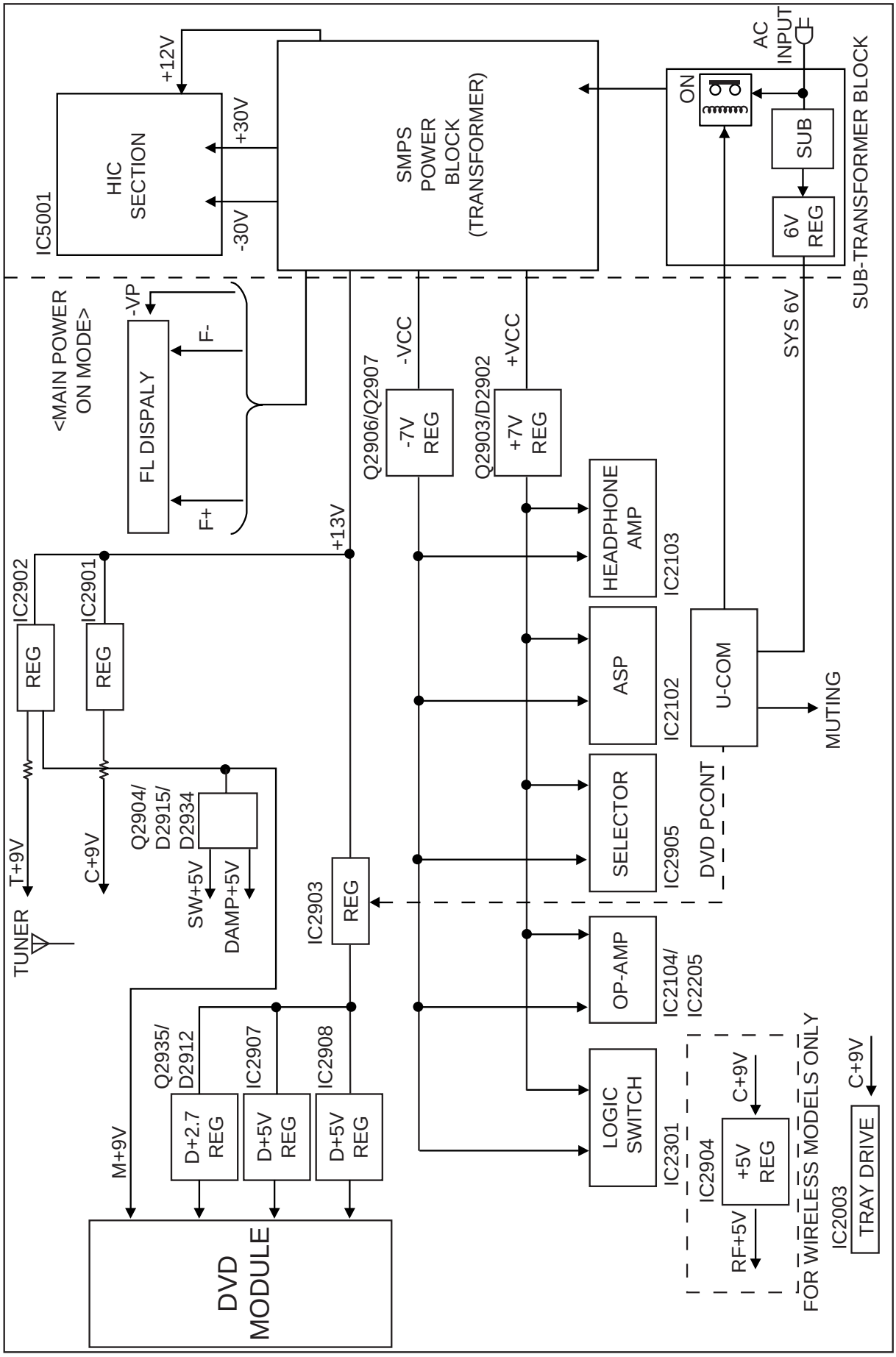

23.5. HT995 Power Block (SMPS)

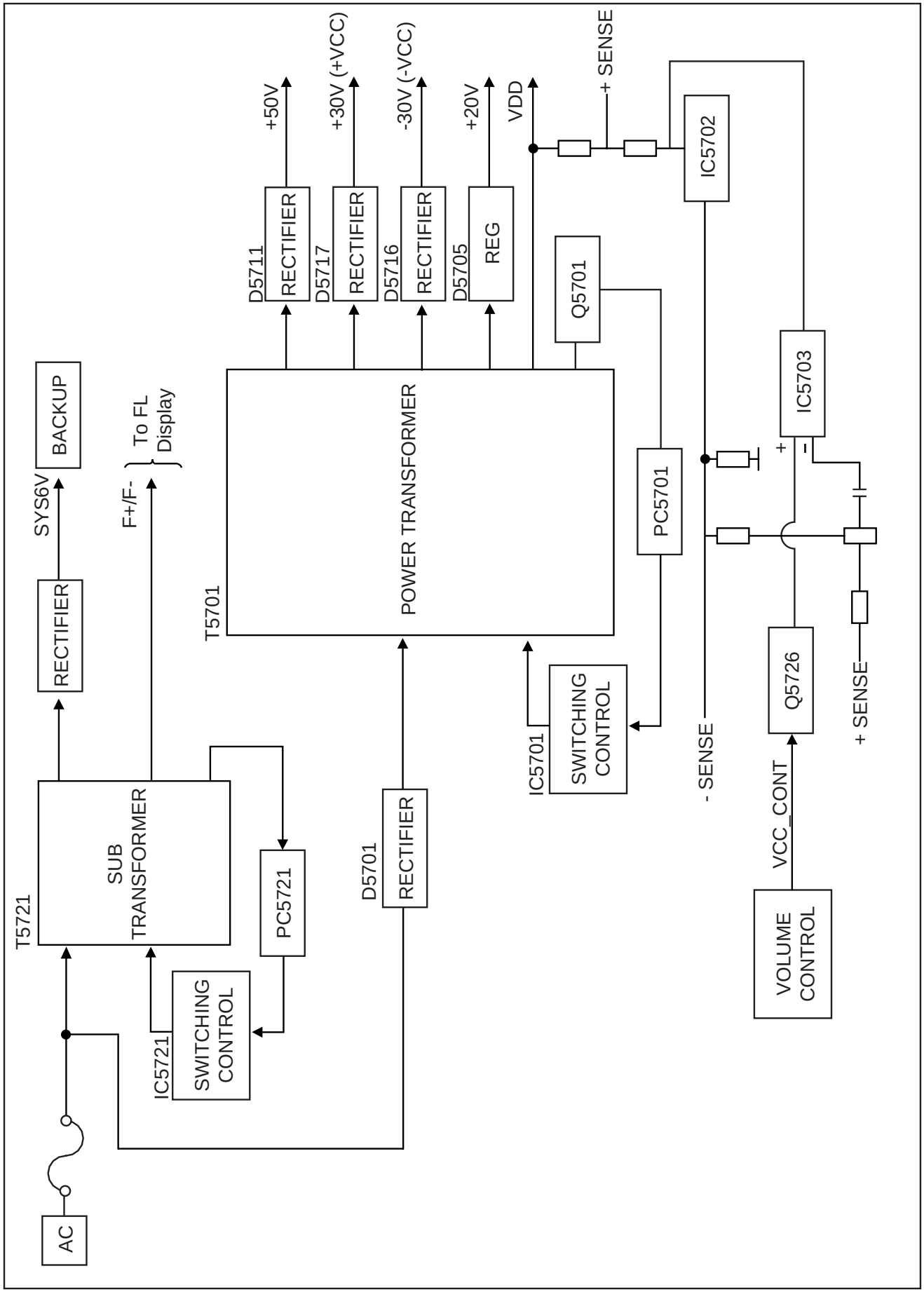

24 Terminal Function of ICs

24.1. IC2018 (C2CBYY000196): Micro-processor IC

Pin No.	Terminal Name	I/O	Function
1	TRAY_ CLOSE	I	Loading mechanism close SW (L: SW ON)
2	TRAY_CCW	O	Terminal for tray control 1
3	TRAY_CW	O	Terminal for tray control 2
4	TRAY_OPEN	I	Loading Mechanism open SW (L: SW ON)
5	MP_DAC1	-	No connection
6	MP_DAC2	-	No connection
7	MP_DAC3	-	No connection
8	BYTE	-	VSS (GND)
9	CNVSS	-	VSS (GND)
10	MPORT_ SELECT	-	No connection
11	RDS_ ENABLE	I	RDS Enable (H=Enable, L=Disable)
12	RESET	I	System Reset Input
13	XOUT	-	Main Clock Output (10.0 MHZ)
14	VSS	-	GND (0V)
15	XIN	-	Main Clock Input (10.0 MHZ)
16	VCC	-	Power supply (5V)
17	NMI	I	Connect to VCC, External Interrupt I/P
18	RMT	I	Remote control input
19	SYNC	I	AC failure detection input
20	AM_BP	O	AM beat proof
21	MIC_EN	-	No connection
22	WLESS_EN	-	No connection
23	EDA	I/O	DATA signal for the EEPROM
24	ECK	O	CLOCK signal for the EEPROM
25	ECS	O	LAT signal for the EEPROM
26	FMPORT_EN	I	FM enable
27	RDS_CLK	I	CLK signal from the RDS decoder
28	DVD_CLK	I	CLK signal for the DVD Module
29	DVD_STAT	I	STATUS signal from DVD Module
30	DVD_CMD	O	CMD signal for the DVD Module
31	RF_DET	I	RF module detection - wireless ready
32	RF_PCON	-	RF power control
33	RF_LINK	I	RF link control - wireless ready
34	RF_DATA	O	RF change direction -wireless ready
35	TUN_SD	I	CMD signal for the DVD Module
36	TUN_CLK	O	I2C Clock Data Tuner
37	TUN_DO	I	Stereo Detection
38	TUN_DI	O	I2C Data for Tuner
39	N.C	-	No connection
40	PCONT	O	Control Signal for the Power Control Relay
41	EPM	-	No connection
42	DVD_MUTE	I	Signal from DVD module control mute circuit
43	WD_SRND	O	Wide surrond out
44	WS_LED	O	Wide surround LED
45	WS_EN	I	Wide surround enable
46	VIDEO_MUTE	O	Video mute control
47	N.C	-	No connection
48	N.C	-	No connection
49	N.C	-	No connection
50	N.C	-	No connection
51	N.C	-	No connection
52	N.C	-	No connection
53	N.C	-	No connection
54	N.C	-	No connection
55	N.C	-	No connection
56	N.C	-	No connection
57	N.C	-	No connection
58	N.C	-	No connection
59	N.C	-	No connection
60	N.C	-	No connection
61	OPT-EN	I	Optical enable
62	VCC	-	Power supply 5.0V
63	N.C	-	No connection
64	VSS	-	GND (0V)
65	MIC_MUTE	O	Muting circuit for thr mic input
66	MIC_SW	O	Mic surround
67	HOP_DA	O	Digital Amp frequency hop control
68	MUTE_S	O	Mute signal for surround Audio signal
69	MUTE_F	O	Mute signal output for Front speaker
70	DC_DET	I	Signal from the DC Detection circuit
71	MOD_DA	O	Digital amplifier standby control
72	DVD_PCNT	O	Control signal for the power for the DVD Module
73	CEC_OUT	-	No connection
74	HOTPLUG	-	No connection
75	CEC_IN	-	No connection
76	JOG_A	I	Signal A from Volume JOG
77	JOG_B	I	Signal B from Volume JOG
78	HP_MUTE	O	Headphone mute
79	SCART_ MUTE	O	Line out for SCART terminal
80	WIDE1	O	Control signal for the WIDE function
81	RGB_H	O	Mute signal 1 for video output
82	YC-H	O	Control signal for the video signal Mix
83	ASP_CLK	O	ASP clock
84	ASP_DAT	O	ASP data
85	FLD_CLK	O	Clock signal for the FL driver
86	FLD_STB	O	FL driver strobe
87	FLD_OUT	O	FL data out
88	RDS_DAT	I	Data signal from the RDS decoder
89	MD3	I	Model code 3
90	MD2	I	Model code 2
91	KEY 2	I	Key 2 line input
92	MD1	I	Model code 1
93	DES3	I	Region setting for DVD
94	DES2	I	Model code Digit 1
95	DES1	I	Region setting for Tuner
96	AVSS	-	Analog power supply input
97	KEY1	I	Key 1 line input
98	VREF	-	Reference voltage input
99	AVCC	-	Analog power supply input
100	BRAKE_H	O	Terminal for tray control 3

25 Exploded Views

25.1. Cabinet Parts Location

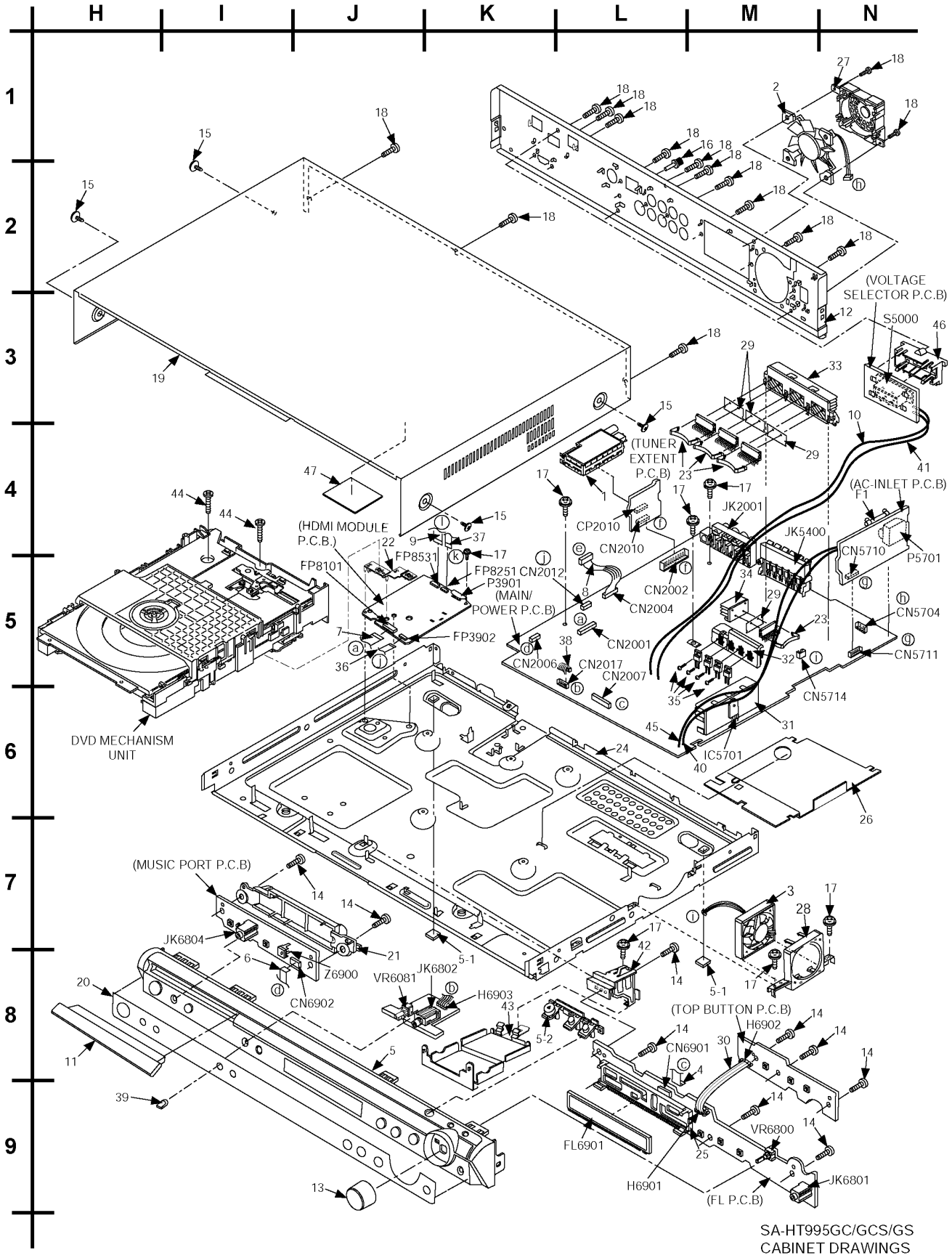

SA-HT995GC/GCS/GS
CABINET DRAWINGS

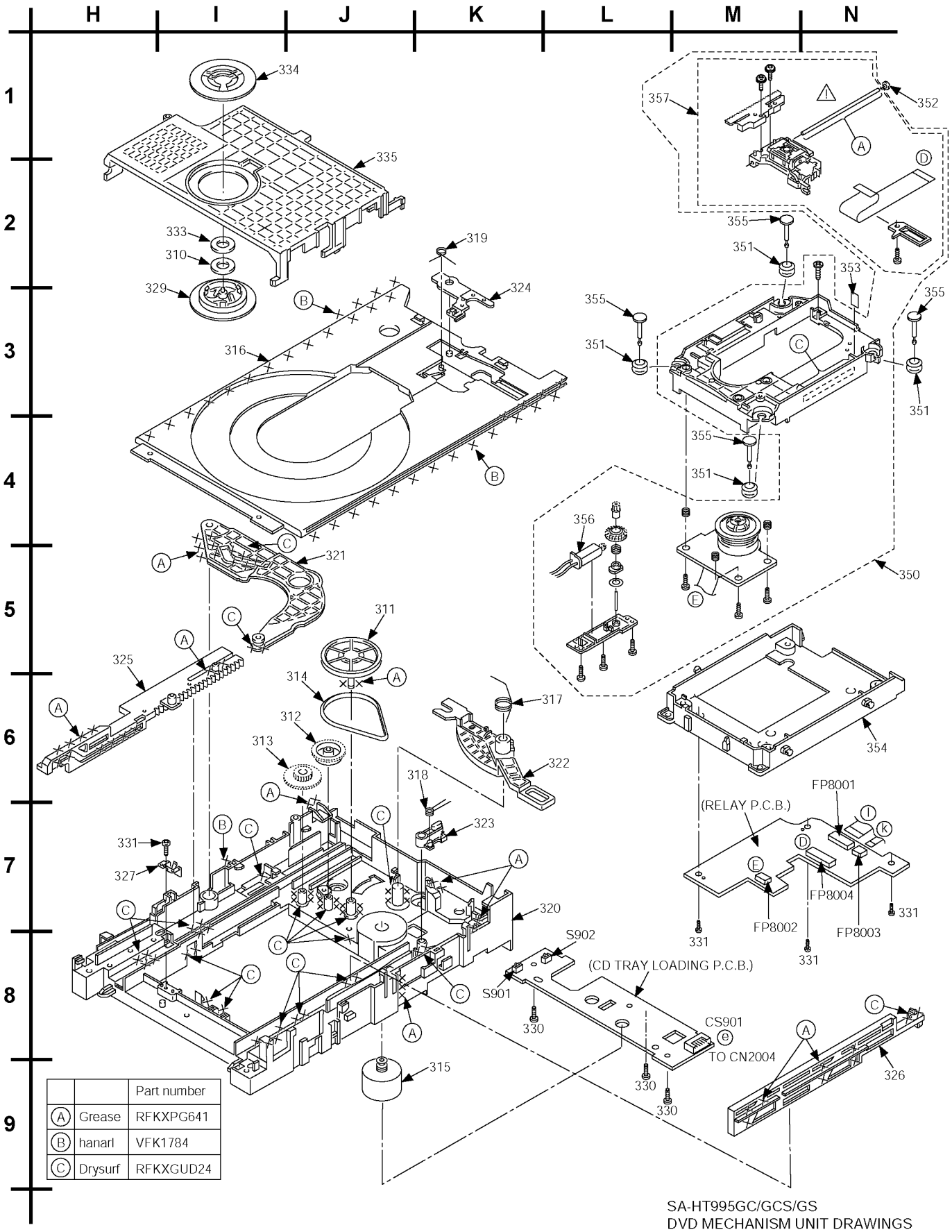

		Part number
A	Grease	RFKXPG641
B	hanarl	VFK1784
C	Drysurf	RFKXGUD24

SA-HT995GC/GCS/GS
DVD MECHANISM UNIT DRAWINGS

25.2. Packaging

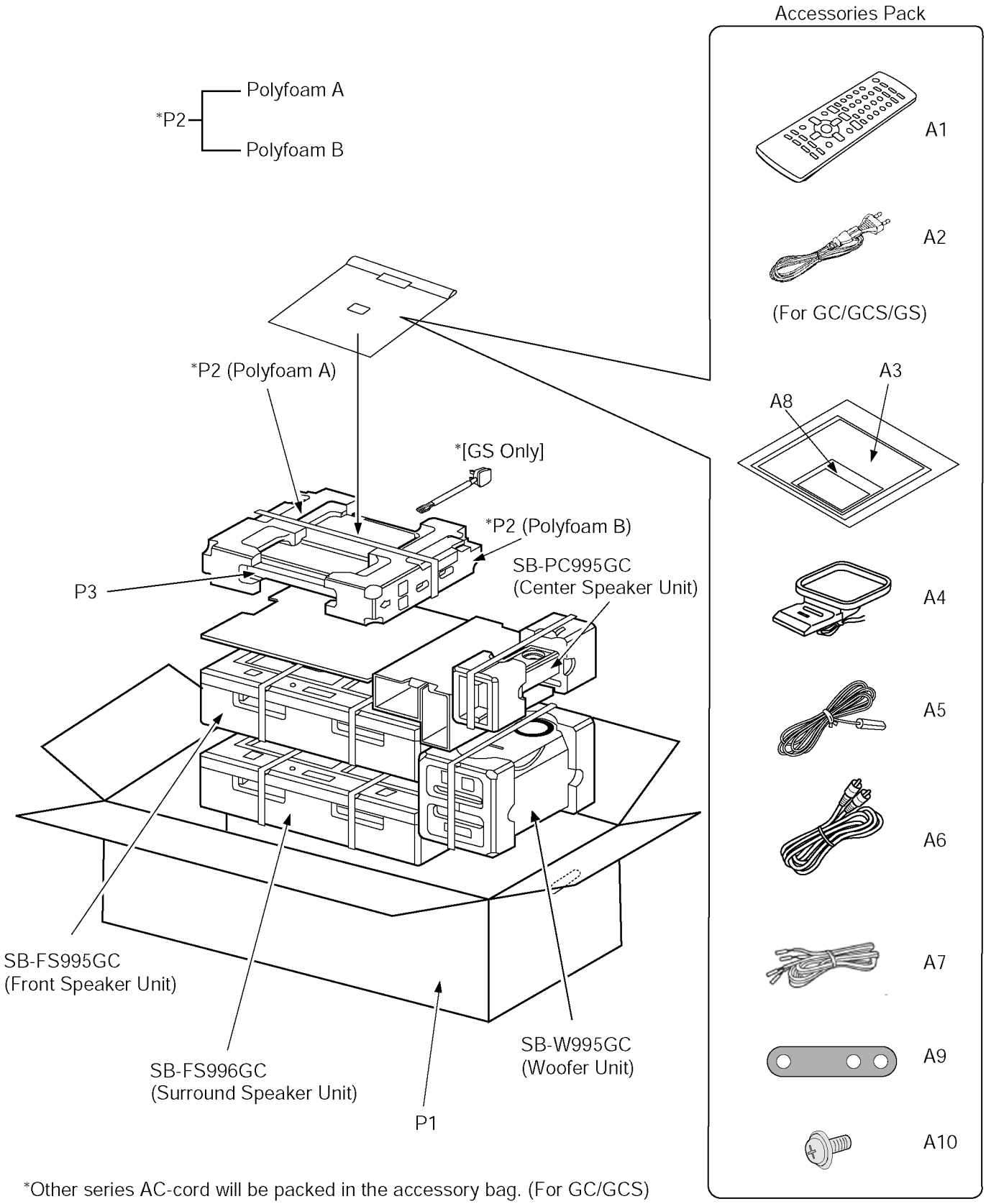

*Other series AC-cord will be packed in the accessory bag. (For GC/GCS)

26 Replacement Parts List

Notes:

*Important safety notice:

Components identified by ⚠ mark have special characteristics important for safety purpose.

Furthermore, special parts which have purposes of fire-retardant (resistors), high-quality sound (capacitors), low-noise (resistors), etc. are used.

When replacing any of components, be sure to use only manufacture's specified parts shown in the parts list.

*Warning: This product uses a laser diode. Refer to caution statements.

*Capacity values are in microfarads (μF) unless specified otherwise, P=Pico-farads (pF), F=Farads (F).

*Resistance values are in ohms, unless specified otherwise, 1K=1,000 (OHM), 1M=1,000K (OHM).

*The parenthesized indications in the Remarks columns specify the model names and areas. (Refer to the cover page)

*The marking (RTL) indicates the retention time is limited for this item. After the discontinuation of this assembly in production, it will no longer be available.

*Reference for O/I book languages are as follows:

[En: English, Cn: Chinese, Ar: Arabic, Pe: Persian]

*[M] indicates in the Remarks columns indicates parts supplied by PAVCSG.

*[SPG] indicates in the Remarks columns indicates parts supplied by SPG [PAVC].

26.1. Component Parts List

Ref. No.	Part No.	Part Name & Description	Remarks
		CABINET AND CHASSIS	
1	J3CCBB000007	TUNER PACK	[M]
2	L6FAHAKH0001	FAN UNIT	[M]
3	L6FAYYYH0001	SIDE FAN	[M]
4	REEX0504	16P FFC CABLE	[M]
5	RYPX0105F-S1	FRONT PANEL ASS'Y	[M]
5-1	RKA0059-K	LEG RUBBER	[M]
5-2	RGUX0646-S1	OPEN CLOSE BUTTON	[M]
6	REEX0533	10P FFC CABLE	[M]
7	REEX0505	50P FFC CABLE	[M]
8	REXX0384	7 PIN FLAT WIRE (DVD	[M]
9	REEX0546	26P FFC WIRE	[M]
10	REXX0540-1	WIRE (VIOLET)	[M]
11	RGKX0327A-2S	DVD LID	[M]
12	RGRX0055F-A1	REAR PANEL	[M]GC/GS
12	RGRX0055F-B	REAR PANEL	[M]GCS
13	RGWX0076-S	VOLUME KNOB	[M]
14	RHD26046	SCREW	[M]
15	RHD30007-1SJ	SCREW	[M]
16	RHD30070	EARTH TERMINAL	[M]
17	RHD30111-3	SCREW	[M]
18	RHD30119-S	SCREW	[M]
19	RKMX0129-S	TOP CABINET	[M]
20	RKWX0254G-K	FL WINDOW	[M]
21	RMAX0087	MECHA HOLDER	[M]
22	RMAX0088	MECHA CHASSIS	[M]
23	RMCX0035	HEAT SINK CLIP	[M]
24	RMKX0114-1	BOTTOM CHASSIS	[M]
25	RMNX0149	FL HOLDER	[M]
26	RMNX0164	INSULATOR	[M]
27	RMQX0153-H	FAN BRACKET	[M]
28	RMQX0175	FAN BRACKET	[M]
29	RMZX0026-1	IC INSULATOR A	[M]
30	RWJ1103060XX	3P FLAT WIRE	[M]
31	RXXX0067-2	HEATSINK C	[M]
32	RXXX0068-1	HEATSINK D	[M]
33	RXXX0069	HEAT SINK A	[M]
34	RXXX0070-1	HEAT SINK B	[M]
35	XTB3+10JFJ	SCREW	[M]
36	REEX0534	6P FFC CABLE (HDMI TO MAIN)	[M]
37	REEX0547-1	6P FFC CABLE	[M]
38	REXX0503	5P FLAT WIRE	[M]
39	RGW0352A-K	MIC KNOB	[M]
40	REXX0527	WIRE (GREY)	[M]
41	REXX0539-1	VOLTAGE SELECTOR WIRE	[M]
42	RMAX0086-1	PANEL ANGLE	[M]
43	RXQX0035	MIC PCB SHIELD PLATE	[M]
44	RHDC0023	SCREW	[M]
45	REXX0526	WIRE (WHITE)	[M]
46	RMNX0184-1	VOLTAGE SELECTOR HOLDER	[M]
47	RMNX0198	TOP CABINET INSULATOR	[M]
		CD/DVD MECHANISM UNIT	
310	RHM0003-J	MAGNET	[M]
311	RDG0547	PULLEY GEAR	[M]
312	RDG0548-1	RELAY GEAR	[M]
313	RDG0549	DRIVE GEAR	[M]
314	RDV0070	BELT	[M]
315	REM0102	MOTOR UNIT	[M]
316	RGQ0395-K1	TRAY	[M]
317	RME0350	CHANGE LEVER SPRING	[M]
318	RME0351	LOCK LEVER SPRING	[M]
319	RME0353	TRAY SLIDER SPRING	[M]
320	RMK0591	MECHA CHASSIS	[M]
321	RML0627-2	DRIVE ARM	[M]
322	RML0628	CHANGE LEVER	[M]
323	RML0629	LOCK LEVER	[M]
324	RML0631	TRAY SLIDER	[M]

Ref. No.	Part No.	Part Name & Description	Remarks
325	RMM0247	DRIVE RACK	[M]
326	RMM0248	SUB RACK	[M]
327	RMC0387	SUPPORT SPRING	[M]
329	RMR1446-X	CLAMPER	[M]
330	XTN26+6GFJ	SCREW	[M]
331	XTV2+6GFJ	SCREW	[M]
333	XWG6FFY	WASHER	[M]
334	RMR1447-X	MAGNET HOLDER	[M]
335	RMR1468-K	CLAMP PLATE	[M]
350	RAE2018W-S	DT69U3 BLOCK	[M]
351	RMG0598-A	FLOATING RUBBER	[M]
352	RMG0617-H	CUSHION RUBBER A	[M]
353	RMG0618-H	CUSHION RUBBER B	[M]
354	RMR1596-X2	MIDDLE CHASSIS	[M]
355	RMS0789	FIXED PIN	[M]
356	RXQ0946	TRAVERSE MOTOR ASS'Y	[M]
357	RXQ1389	DVD OPU SUB ASS'Y	[M]
		PRINTED CIRCUIT BOARDS	
	REP4034D	HDMI MODULE P.C.B.	[M] (RTL) GC/GS
	REP4034E	HDMI MODULE P.C.B.	[M] (RTL) GCS
	REPX0524A	MAIN P.C.B.	[M] (RTL) GC/GS
	REPX0524C	MAIN P.C.B.	[M] (RTL) GCS
	REPX0524A	AC-INLET P.C.B.	[M] (RTL) GC/GS
	REPX0524C	AC-INLET P.C.B.	[M] (RTL) GCS
	REPX0524A	VOLTAGE SELECTOR P.C.B.	[M] (RTL) GC/GS
	REPX0524C	VOLTAGE SELECTOR P.C.B.	[M] (RTL) GCS
	REPX0524A	TUNER EXTENT P.C.B.	[M] (RTL) GC/GS
	REPX0524C	TUNER EXTENT P.C.B.	[M] (RTL) GCS
	REPX0539A	MIC P.C.B.	[M] (RTL)
	REPX0512B	FL P.C.B.	[M] (RTL)
	REPX0512B	MUSIC PORT P.C.B.	[M] (RTL)
	REPX0512B	TOP BUTTON P.C.B.	[M] (RTL)
	REPX0530A	RELAY P.C.B.	[M] (RTL)
	REP3288B	LOADING P.C.B.	[M] (RTL)
		INTEGRATED CIRCUITS	
IC904	C0GAY0000013	IC MOTOR DRIVER	[M]
IC2018	C2CBYY000196	IC MIRCO-PROCESSOR	[M]
IC2102	C1BB00001098	IC ASP	[M]
IC2103	C0AABB000125	IC HEADPHONES AMP	[M]
IC2104	C0ABCB000052	IC QUAD OP-AMP	[M]
IC2105	C0ABBB000230	IC OP-AMP	[M]
IC2204	C0ABBB000230	IC OP-AMP	[M]
IC2205	C0ABCB000052	IC QUAD OP-AMP	[M]
IC2301	C0JBAR000326	IC 4 CHANNEL SW	[M]
IC2600	C0ABBB000230	IC OP-AMP	[M]
IC2801	C9ZB00000461	IC VIDEO BUFFER	[M]
IC2802	C1AB00001731	IC VIDEO BUFFER	[M]
IC2903	C0DAAMH00012	IC SW REGULATOR	[M]

Ref. No.	Part No.	Part Name & Description	Remarks
IC3701	MN864701	IC HDMI TRANSMITTER	[M]
IC3782	C0CBCAD00082	IC POWER SUPPLY	[M]
IC3901	C1AB00002239	IC HDMI PANELLINK CINEMA TRANSMITTER	[M]
IC3931	C0JBAA000344	IC LOGICS	[M]
IC3952	C0CBCDC00063	IC TERMINAL	[M]
IC5000	C1BA00000407	IC DIGITAL AMP	[M]
IC5200	C1BA00000407	IC DIGITAL AMP	[M]
IC5300	C1BA00000407	IC DIGITAL AMP	[M]
IC5400	C1BA00000407	IC DIGITAL AMP	[M]
IC5500	C0JBAB000011	IC HEX INVERTER	[M]
IC5701	C5HABZZ00125	IC SWITCHING REGULATOR	[M]
IC5702	C0DABFC00002	IC SHUNT REGULATOR	[M]
IC5721	C0DABYY00002	IC SW REGULATOR	[M]
IC5971	C0ABBA000168	IC OPERATIONAL AMP	[M]
IC6901	C0HBB0000057	IC DISPLAY DRIVER	[M]
IC8001	MN2DS0009AP	IC DV3.2 LSI	[M]
IC8051	C3ABPG000133	IC SDRAM	[M]
IC8111	C0DBZYY00018	IC 3.3V DC-DC CONVERTER	[M]
IC8151	C0DBEHG00006	IC 1.2V REGULATOR	[M]
IC8251	C0GBG0000048	IC MOTOR DRIVER	[M]
IC8421	C0FBBK000050	IC AUDIO DAC	[M]
IC8601	C0EBA0000029	IC RESET	[M]
IC8606	C0EBE0000455	IC RESET	[M]
IC8651	RFKWMHA02160	IC FLASH ROM	[SPG] GC/GS
IC8651	RFKWMHA03160	IC FLASH ROM	[SPG] GCS
IC8691	C0JBAA000346	IC AND GATE	[M]
IC8695	C0JBAA000346	IC AND GATE	[M]
IC8701	C0JBAB000614	IC AND GATE	[M]
		TRANSISTORS	
Q2003	B1GBCFLL0037	TRANSISTOR	[M]
Q2004	B1ADCE000012	TRANSISTOR	[M]
Q2006	B1GBCFJN0033	TRANSISTOR	[M]
Q2030	B1GBCFJN0033	TRANSISTOR	[M]
Q2096	2SD0601AHL	TRANSISTOR	[M]
Q2097	2SD0601AHL	TRANSISTOR	[M]
Q2101	B1GFGCAA0001	TRANSISTOR	[M]
Q2201	B1GDCFGA0018	TRANSISTOR	[M]
Q2303	B1GDCFGA0018	TRANSISTOR	[M]
Q2304	B1ABCF000176	TRANSISTOR	[M]
Q2305	B1GFGCAA0001	TRANSISTOR	[M]
Q2306	B1GFGCAA0001	TRANSISTOR	[M]
Q2801	B1GBCFJN0033	TRANSISTOR	[M]
Q2804	B1GBCFJN0033	TRANSISTOR	[M]
Q2805	B1GBCFJN0033	TRANSISTOR	[M]
Q2903	B1BACD000018	TRANSISTOR	[M]
Q2904	B1AAKD000012	TRANSISTOR	[M]
Q2906	B1BCCG000002	TRANSISTOR	[M]
Q2907	B1ADCE000012	TRANSISTOR	[M]
Q2909	B1GBCFJN0033	TRANSISTOR	[M]
Q2912	B1BACD000018	TRANSISTOR	[M]
Q2913	B1BACG000023	TRANSISTOR	[M]
Q2914	B1BACD000018	TRANSISTOR	[M]
Q2915	B1GBCFJN0033	TRANSISTOR	[M]
Q2955	B1BACD000018	TRANSISTOR	[M]
Q3901	2SD1819A0L	TRANSISTOR	[M]
Q3902	B1CFHA000002	TRANSISTOR	[M]
Q3903	B1CFHA000002	TRANSISTOR	[M]
Q3941	2SD1819A0L	TRANSISTOR	[M]
Q3942	2SD1819A0L	TRANSISTOR	[M]
Q3943	2SD1819A0L	TRANSISTOR	[M]
Q5101	B1ABCF000176	TRANSISTOR	[M]
Q5102	B1ABCF000176	TRANSISTOR	[M]
Q5500	B1ADCE000012	TRANSISTOR	[M]
Q5501	B1ABCF000176	TRANSISTOR	[M]
Q5601	B1ABCF000176	TRANSISTOR	[M]
Q5602	B1ABCF000176	TRANSISTOR	[M]
Q5603	B1ADCE000012	TRANSISTOR	[M]
Q5604	B1ABCF000176	TRANSISTOR	[M]
Q5701	2SC3940ARA	TRANSISTOR	[M]

Ref. No.	Part No.	Part Name & Description	Remarks
Q5704	B1ABCF000176	TRANSISTOR	[M]
Q5705	B1ABCF000176	TRANSISTOR	[M]
Q5706	B1BACD000018	TRANSISTOR	[M]
Q5710	2SC3940ARA	TRANSISTOR	[M]
Q5740	B1BACG000048	TRANSISTOR	[M]
Q5741	B1ABCF000176	TRANSISTOR	[M]
Q5742	B1ABCF000176	TRANSISTOR	[M]
Q5743	B1ABCF000176	TRANSISTOR	[M]
Q5744	B1ABCF000176	TRANSISTOR	[M]
Q5745	B3PBA0000237	TRANSISTOR	[M] ⚠
Q5746	B1GBCFLL0037	TRANSISTOR	[M]
Q5747	B1GDCFGA0018	TRANSISTOR	[M]
Q5748	B3PBA0000237	TRANSISTOR	[M] ⚠
Q5750	B1GBCFJN0033	TRANSISTOR	[M]
Q5751	B1ABCF000176	TRANSISTOR	[M]
Q5752	B1ABCF000176	TRANSISTOR	[M]
Q8551	2SD1819A0L	TRANSISTOR	[M]
Q8552	B1ADGB000008	TRANSISTOR	[M]
Q8561	2SD1819A0L	TRANSISTOR	[M]
Q8562	B1ADGB000008	TRANSISTOR	[M]
QR8111	XP0621400L	CHIP TRANSISTOR	[M]
QR8420	UNR521100L	CHIP TRANSISTOR	[M]
QR8571	UNR511V00L	CHIP TRANSISTOR	[M]
PC5701	B3PBA0000237	PHOTOCOUPLER	[M] ⚠
PC5721	B3PBA0000237	PHOTOCOUPLER	[M] ⚠
		DIODES	
D2005	B0ACCK000005	DIODE	[M]
D2007	B0ACCK000005	DIODE	[M]
D2008	B0ACCK000005	DIODE	[M]
D2600	B0ACCK000005	DIODE	[M]
D2601	B0ACCK000005	DIODE	[M]
D2603	B0ACCK000005	DIODE	[M]
D2902	B0BC7R500001	DIODE	[M]
D2904	B0JCPD000025	DIODE	[M]
D2906	B0ADCJ000020	DIODE	[M]
D2907	B0ADCJ000020	DIODE	[M]
D2915	B0BC6R700006	DIODE	[M]
D2919	B0ADCJ000020	DIODE	[M]
D2921	B0ACCK000005	DIODE	[M]
D2923	B0ACCK000005	DIODE	[M]
D2929	B0ACCK000005	DIODE	[M]
D2935	B0EAKM000117	DIODE	[M]
D2936	B0EAKM000117	DIODE	[M]
D2937	B0EAKM000117	DIODE	[M]
D2938	B0EAKM000117	DIODE	[M]
D2939	B0EAKM000117	DIODE	[M]
D2941	B0BC5R600003	DIODE	[M]
D2942	B0BC5R000009	DIODE	[M]
D2943	B0BC4R600016	DIODE	[M]
D2944	B0BC3R700004	DIODE	[M]
D2945	B0BC7R500001	DIODE	[M]
D2950	ERJ3GEY0R00V	DIODE	[M]
D3901	MA2J72800L	DIODE	[M]
D5701	B0FBAR000018	DIODE	[M] ⚠
D5702	B0ZAZ0000052	DIODE	[M]
D5703	B0BC02900004	DIODE	[M]
D5704	B0JAME000029	DIODE	[M]
D5705	B0EAMM000057	DIODE	[M]
D5706	B0EAMM000057	DIODE	[M]
D5707	B0BC035A0007	DIODE	[M]
D5708	B0BC01700015	DIODE	[M]
D5709	B0ACCK000005	DIODE	[M]
D5710	B0EAMM000057	DIODE	[M]
D5711	B0HBSM000043	DIODE	[M]
D5712	B0HBSM000043	DIODE	[M]
D5713	B0BC4R0A0006	DIODE	[M]
D5716	B0HFRJ000012	DIODE	[M]
D5721	B0EAMM000057	DIODE	[M]
D5723	B0EAMM000057	DIODE	[M]
D5724	B0BC3R700004	DIODE	[M]

Ref. No.	Part No.	Part Name & Description	Remarks
D5726	B0EAMM000057	DIODE	[M]
D5740	B0BC01200019	DIODE	[M]
D5741	B0EAMM000057	DIODE	[M]
D5743	B0ACCK000005	DIODE	[M]
D5744	B0ACCK000005	DIODE	[M]
D5745	B0EAKM000117	DIODE	[M]
D5746	B0BC5R600003	DIODE	[M]
D5747	B0ACCK000005	DIODE	[M]
D5748	B0EAMM000057	DIODE	[M]
D5749	B0EAMM000057	DIODE	[M]
D5750	B0ACCK000005	DIODE	[M]
D5752	B0BC5R000009	DIODE	[M]
D5753	B0ACCK000005	DIODE	[M]
D5754	B0ACCK000005	DIODE	[M]
D5903	B0BC01200019	DIODE	[M]
D5923	B0BC01200019	DIODE	[M]
D5970	B0EAMM000057	DIODE	[M]
D5971	B0BC5R000009	DIODE	[M]
D6900	B3AAA0000803	DIODE	[M]
D6910	B0BC4R3A0006	DIODE	[M]
D8211	MA2J11100L	DIODE	[M]
D8571	MA2J72800L	DIODE	[M]
DZ5701	ERZV10V511CS	ZENER	[M] ⚠
		CHIP INDUCTORS	
LB3701	J0JHC0000045	CHIP INDUCTOR	[M]
LB3702	J0JCC0000119	CHIP INDUCTOR	[M]
LB3703	J0JHC0000045	CHIP INDUCTOR	[M]
LB3704	J0JCC0000119	CHIP INDUCTOR	[M]
LB3901	J0JHC0000045	CHIP INDUCTOR	[M]
LB3902	J0JHC0000045	CHIP INDUCTOR	[M]
LB3903	J0JCC0000119	CHIP INDUCTOR	[M]
LB3904	J0JCC0000119	CHIP INDUCTOR	[M]
LB3905	J0JCC0000119	CHIP INDUCTOR	[M]
LB3906	J0JCC0000119	CHIP INDUCTOR	[M]
LB5704	J0JKB0000020	EMI BEAD CORE	[M]
LB5707	J0JKB0000020	EMI BEAD CORE	[M]
LB8001	J0JHC0000045	CHIP INDUCTOR	[M]
LB8011	J0JHC0000045	CHIP INDUCTOR	[M]
LB8257	ERJ3GEY0R00V	CHIP RESISTOR	[M]
LB8258	ERJ3GEY0R00V	CHIP RESISTOR	[M]
LB8259	ERJ3GEY0R00V	CHIP RESISTOR	[M]
LB8260	ERJ3GEY0R00V	CHIP RESISTOR	[M]
LB8301	J0JBC0000042	CHIP INDUCTOR	[M]
LB8302	J0JBC0000042	CHIP INDUCTOR	[M]
LB8303	J0JBC0000042	CHIP INDUCTOR	[M]
LB8304	J0JBC0000042	CHIP INDUCTOR	[M]
LB8305	J0JBC0000042	CHIP INDUCTOR	[M]
LB8401	J0JBC0000042	CHIP INDUCTOR	[M]
LB8421	ERJ2GE0R00X	CHIP RESISTOR	[M]
LB8422	ERJ2GE0R00X	CHIP RESISTOR	[M]
LB8423	ERJ2GE0R00X	CHIP RESISTOR	[M]
LB8424	ERJ2GE0R00X	CHIP RESISTOR	[M]
LB8425	ERJ2GE0R00X	CHIP RESISTOR	[M]
LB8426	ERJ2GE0R00X	CHIP RESISTOR	[M]
LB8427	ERJ2GE0R00X	CHIP RESISTOR	[M]
LB8428	ERJ2GE0R00X	CHIP RESISTOR	[M]
LB8429	ERJ2GE0R00X	CHIP RESISTOR	[M]
LB8431	ERJ2GE0R00X	CHIP RESISTOR	[M]
LB8491	ERJ2GE0R00X	CHIP RESISTOR	[M]
LB8530	J0JHC0000045	CHIP INDUCTOR	[M]
LB8531	ERJ2GE0R00X	CHIP RESISTOR	[M]
LB8551	J0JBC0000042	CHIP INDUCTOR	[M]
LB8561	J0JBC0000042	CHIP INDUCTOR	[M]
LB8571	J0JBC0000042	CHIP INDUCTOR	[M]
LB8690	J0JBC0000044	CHIP INDUCTOR	[M]
LB8691	ERJ2GEJ101X	CHIP RESISTOR	[M]
LB8692	ERJ2GEJ101X	CHIP RESISTOR	[M]
LB8693	ERJ2GEJ101X	CHIP RESISTOR	[M]
LB8701	J0JBC0000044	CHIP INDUCTOR	[M]
LB8702	J0JBC0000044	CHIP INDUCTOR	[M]

Ref. No.	Part No.	Part Name & Description	Remarks
		VARIABLE RESISTORS	
VR6081	EVUE27FK3B53	VR MIC LEVEL	[M]
VR6800	EVEKE2F2524M	VR VOLUME JOG	[M]
VA3901	EZJZ0V80008B	VARISTOR	[M]
VA3902	EZJZ0V80008B	VARISTOR	[M]
VA3903	EZJZ0V80008B	VARISTOR	[M]
VA3904	EZJZ0V80008B	VARISTOR	[M]
VA3905	EZJZ0V80008B	VARISTOR	[M]
VA3906	EZJZ0V80008B	VARISTOR	[M]
VA3907	EZJZ0V80008B	VARISTOR	[M]
VA3908	EZJZ0V80008B	VARISTOR	[M]
VA3910	EZJZ0V800AA	VARISTOR	[M]
VA3911	EZJZ0V800AA	VARISTOR	[M]
VA3912	EZJZ0V800AA	VARISTOR	[M]
VA3913	EZJZ0V800AA	VARISTOR	[M]
ZA5701	EYF52BCY	FUSE HOLDER	[M]
ZA5702	EYF52BCY	FUSE HOLDER	[M]
ZJ5701	K4CZ01000027	TERMINALS	[M]
		SWITCHES	
S901	RSH1A044-1A	SW PLAY	[M]
S902	RSH1A044-1A	SW OPEN	[M]
S5000	K0ABCA000005	SW VOLTAGE SELECTOR	[M]
S6800	EVQ21405R	SW OPEN/CLOSE	[M]
S6801	EVQ21405R	SW STOP	[M]
S6802	EVQ21405R	SW PLAY	[M]
S6803	EVQ21405R	SW SELECTOR	[M]
S6804	EVQ21405R	SW FORWARD	[M]
S6805	EVQ21405R	SW REVERSE	[M]
S6806	EVQ21405R	SW POWER	[M]
S6807	EVQ21405R	SW WIDE SURROUND	[M]
		CONNECTORS	
CN2001	K1MY50AA0029	50P CONNECTOR	[M]
CN2002	K1KA10AA0031	10P CONNECTOR	[M]
CN2004	K1YZ07000001	7P WIRE HOLDER	[M]
CN2006	K1MN10AA0003	10P CONNECTOR	[M]
CN2007	K1MN16AA0003	30P CONNECTOR	[M]
CN2010	K1KB10B00042	10P CONNECTOR	[M]
CN2012	K1MN06AA0003	6P CONNECTOR	[M]
CN2017	K1KA05AA0193	5P CONNECTOR	[M]
CN5704	K1KA03AA0301	3P CONNECTOR	[M]
CN5710	K1KB06B00038	6P CONNECTOR	[M]
CN5711	K1KA06AA0031	6P CONNECTOR	[M]
CN5714	K1KA02AA0186	2P CONNECTOR	[M]
CN6901	K1MN16AA0003	9P CONNECTOR	[M]
CN6902	K1MN10AA0003	19P CONNECTOR	[M]
CP2010	K1KA10AA0031	10P CONNECTOR	[M]
CS901	K1KA07BA0061	7P CONNECTOR	[M]
FP3902	K1MN06BA0148	6P CONNECTOR	[M]
FP8001	K1MN06BA0147	6P CONNECTOR	[M]
FP8002	K1MN06BA0147	6P CONNECTOR	[M]
FP8003	K1MY26BA0053	26P CONNECTOR	[M]
FP8004	K1MY26BA0025	26P CONNECTOR	[M]
FP8101	K1MN50BA0173	50P CONNECTOR	[M]
FP8251	K1MN06AA0076	6P CONNECTOR	[M]
FP8531	K1MY26AA0021	26P CONNECTOR	[M]
		THERMISTOR	
TH5701	D4CAC8R00002	THERMISTOR	[M] ⚠
TH5702	D4CAC8R00002	THERMISTOR	[M] ⚠

Ref. No.	Part No.	Part Name & Description	Remarks
		COILS & TRANSFORMERS	
L2008	G0C3R3JA0027	COIL	[M]
L2009	G0C220JA0055	COIL	[M]
L2801	G0C220JA0055	COIL	[M]
L2802	J0JBC0000015	CHIP INDUCTOR	[M]
L2803	J0JBC0000015	CHIP INDUCTOR	[M]
L2804	J0JBC0000015	CHIP INDUCTOR	[M]
L2805	J0JBC0000015	CHIP INDUCTOR	[M]
L2806	J0JBC0000015	CHIP INDUCTOR	[M]
L2807	J0JBC0000015	CHIP INDUCTOR	[M]
L2902	G0A101G00022	COIL	[M]
L2903	G0A200D00002	COIL	[M]
L2909	G0A200D00002	COIL	[M]
L2910	G0C220JA0055	COIL	[M]
L2911	G0A200D00002	COIL	[M]
L3901	G1C100K00019	CHIP COIL	[M]
L3902	G1C100K00019	CHIP COIL	[M]
L3903	J0MAB0000170	FILTER	[M]
L3904	J0MAB0000170	FILTER	[M]
L3905	J0MAB0000170	FILTER	[M]
L3906	J0MAB0000170	FILTER	[M]
L5000	ETQA15A150T	COIL	[M]
L5001	G0B9R5K00001	COIL	[M]
L5002	G0B9R5K00001	COIL	[M]
L5200	ETQA15A150T	COIL	[M]
L5201	G0B9R5K00001	COIL	[M]
L5300	ETQA15A150T	COIL	[M]
L5301	G0B9R5K00001	COIL	[M]
L5400	ETQA15A150T	COIL	[M]
L5401	G0B9R5K00001	COIL	[M]
L5402	G0B9R5K00001	COIL	[M]
L5500	J0JKB0000020	EMI BEAD CORE	[M]
L5501	J0JKB0000020	EMI BEAD CORE	[M]
L5704	ELF22V020C	LINE FILTER	[M] ⚠
L5710	G0C220JA0055	COIL	[M]
L6081	J0JBC0000019	CHIP INDUCTOR	[M]
L6082	J0JBC0000030	CHIP BEEZ	[M]
L6083	J0JBC0000019	CHIP INDUCTOR	[M]
L6084	J0JBC0000019	CHIP INDUCTOR	[M]
L6101	J0JBC0000019	CHIP INDUCTOR	[M]
L6201	J0JBC0000019	CHIP INDUCTOR	[M]
L6801	J0JBC0000019	CHIP INDUCTOR	[M]
L6903	J0JBC0000041	CHIP INDUCTOR	[M]
L6904	J0JBC0000019	CHIP INDUCTOR	[M]
L8201	G1C100K00019	CHIP COIL	[M]
L8301	G1C100K00019	CHIP COIL	[M]
L8302	G1C100K00019	CHIP COIL	[M]
L8501	G1C100K00019	CHIP COIL	[M]
L8550	G1C100KA0055	CHIP INDUCTOR	[M]
T5701	ETS42BJ1F6AC	TRANSFORMER	[M] ⚠
T5721	ETS19AB1Z6AG	TRANSFORMER	[M] ⚠
		COMPONENT COMBINATION	
Z6900	B3MAZ0000023	REMOTE CONTROL SENSOR	[M]
		OSCILLATORS	
X2001	H2B100500004	CERAMIC RESONATORS	[M]
X5500	H2A375300003	CERAMIC RESISOTR	[M]
X5501	H2A415300001	CERAMIC RESISOTR	[M]
X8621	H0J270500085	CRYSTAL	[M]
		DISPLAY TUBE	
FL6901	A2BD00000160	FL DISPLAY	[M]
FL8101	F1H0J1050018	INDUCTOR	[M]
FL8102	F1H0J1050018	INDUCTOR	[M]
FL8103	F1H0J1050018	INDUCTOR	[M]
FL8104	F1J1E1040022	INDUCTOR	[M]
FL8421	F1H0J1050018	INDUCTOR	[M]

Ref. No.	Part No.	Part Name & Description	Remarks
		FUSE	
F1	K5D632BNA005	FUSE	[M] ⚠
		FUSE PROTECTOR	
FP2000	K5G202AA0002	FUSE PROTECTOR	[M] ⚠
		HOLDERS	
H5700	K1YZ03000010	3P CABLE HOLDER	[M]
H6901	K1YZ03000010	3P CABLE HOLDER	[M]
H6902	K1YZ03000010	3P CABLE HOLDER	[M]
H6903	K1YZ05000005	5P CABLE HOLDER	[M]
		JACKS	
JK2001	K2HA208B0001	JK COMBO	[M]
JK5400	K4AC12B00003	JK SPEAKER	[M]
JK6801	K2HC103A0024	JK SMALL SIGN	[M]
JK6802	K2HB102J0038	JK	[M]
JK6804	K2HC103A0024	JK SMALL SIGN	[M]
P3901	K1FY119H0001	CONNECTOR	[M]
P5701	K2AA2B000015	JK AC INLET	[M] ⚠
		PACKING MATERIALS	
P1	RPGX1619	PACKING CASE	[M]GCS
P1	RPGX1620	PACKING CASE	[M]GC
P1	RPGX1621	PACKING CASE	[M]GS
P2	RPNX0405	POLYFOAM	[M]
P3	RPFX0058-1J	MIRAMAT	[M]
		ACCESSORIES	
A1	N2QAYZ000003	REMOTE CONTROL	[M]
A1-1	RKK-HTR0051K	R/C BATTERY COVER	[M]
A2	K2CQ2CA00002	AC CORD	[M] ⚠
A2	K2CT3CA00004	AC CORD	[M] ⚠ GS
A3	RQT8607-1B	O/I BOOK (EN)	[M]
A3	RQT8608-G	O/I BOOK (CN, AR)	[M]
A4	N1DAAAA00002	AM LOOP ANTENNA	[M]
A5	RSA0007-L	FM ANTENNA	[M]
A6	K2KA2BA00001	VIDEO CABLE	[M]
A7	REEX0449B-2L	SPEAKER CORD	[M]
A8	RQCA0968	SPEAKER LABEL	[M]
A9	RMAX0093-S	SLIDE PLATE	[M]
A10	RHDX50004-1	SCREW	[M]
		RESISTORS	
R2000	ERJ3GEYJ221V	220 1/16W	[M]
R2001	ERJ3GEYJ104V	100K 1/16W	[M]
R2002	ERJ3GEYJ103V	10K 1/16W	[M]
R2003	ERJ3GEYJ221V	220 1/16W	[M]
R2004	ERJ3GEYJ221V	220 1/16W	[M]
R2005	ERJ3GEYJ221V	220 1/16W	[M]
R2006	ERJ3GEYJ182V	1.8K 1/16W	[M]
R2007	ERJ3GEYJ221V	220 1/16W	[M]
R2010	ERJ3GEYJ221V	220 1/16W	[M]
R2012	ERJ3GEYJ103V	10K 1/16W	[M]
R2014	ERJ3GEYJ273V	27K 1/16W	[M]
R2015	ERJ3GEYJ102V	1K 1/16W	[M]
R2016	ERJ3GEYJ221V	220 1/16W	[M]
R2017	ERJ3GEYJ273V	27K 1/16W	[M]
R2019	ERJ3GEYJ273V	27K 1/16W	[M]
R2020	ERJ3GEYJ221V	220 1/16W	[M]
R2022	ERJ3GEYJ221V	220 1/16W	[M]
R2023	ERJ3GEYJ221V	220 1/16W	[M]
R2024	ERJ3GEYJ221V	220 1/16W	[M]
R2026	ERJ3GEYJ223V	22K 1/16W	[M]

Ref. No.	Part No.	Part Name & Description	Remarks
R2027	ERJ3GEYJ221V	220 1/16W	[M]
R2029	ERJ3GEYJ221V	220 1/16W	[M]
R2030	ERJ3GEYJ221V	220 1/16W	[M]
R2031	ERJ3GEYJ221V	220 1/16W	[M]
R2032	ERJ3GEYJ473V	47K 1/16W	[M]
R2033	ERJ3GEYJ221V	220 1/16W	[M]
R2034	ERJ3GEYJ473V	47K 1/16W	[M]
R2035	ERJ3GEYJ221V	220 1/16W	[M]
R2036	ERJ3GEYJ221V	220 1/16W	[M]
R2037	ERJ3GEYJ473V	47K 1/16W	[M]
R2038	ERJ3GEYJ221V	220 1/16W	[M]
R2039	ERJ3GEYJ103V	10K 1/16W	[M]
R2040	ERJ3GEYJ221V	220 1/16W	[M]
R2041	ERJ3GEYJ103V	10K 1/16W	[M]
R2042	ERJ3GEYJ221V	220 1/16W	[M]
R2043	ERJ3GEYJ473V	47K 1/16W	[M]
R2044	ERJ3GEYJ221V	220 1/16W	[M]
R2045	ERJ3GEYJ103V	10K 1/16W	[M]
R2046	ERJ3GEYJ221V	220 1/16W	[M]
R2047	ERJ3GEYJ221V	220 1/16W	[M]
R2048	ERJ3GEYJ221V	220 1/16W	[M]
R2049	ERJ3GEYJ221V	220 1/16W	[M]
R2050	ERJ3GEYJ221V	220 1/16W	[M]
R2051	ERJ3GEYJ103V	10K 1/16W	[M]
R2052	ERJ3GEYJ221V	220 1/16W	[M]
R2053	ERJ3GEYJ103V	10K 1/16W	[M]
R2054	ERJ3GEYJ221V	220 1/16W	[M]
R2055	ERJ3GEYJ221V	220 1/16W	[M]
R2057	ERJ3GEYJ101V	100 1/16W	[M]
R2058	ERJ3GEYJ221V	220 1/16W	[M]
R2059	ERJ3GEYJ221V	220 1/16W	[M]
R2060	ERJ3GEYJ221V	220 1/16W	[M]
R2061	ERJ3GEYJ473V	47K 1/16W	[M]
R2062	ERJ3GEYJ221V	220 1/16W	[M]
R2063	ERJ3GEYJ473V	47K 1/16W	[M]
R2064	ERJ3GEYJ221V	220 1/16W	[M]
R2065	ERJ3GEYJ221V	220 1/16W	[M]
R2066	ERJ3GEYJ222V	2.2K 1/16W	[M]
R2067	ERJ3GEYJ221V	220 1/16W	[M]
R2068	ERJ3GEYJ221V	220 1/16W	[M]
R2069	ERJ3GEYJ221V	220 1/16W	[M]
R2070	ERJ3GEYJ221V	220 1/16W	[M]
R2071	ERJ3GEYJ221V	220 1/16W	[M]
R2072	ERJ3GEYJ221V	220 1/16W	[M]
R2073	ERJ3GEYJ221V	220 1/16W	[M]
R2075	ERJ3GEYJ221V	220 1/16W	[M]
R2076	ERJ3GEYJ103V	10K 1/16W	[M]
R2077	ERJ3GEYJ103V	10K 1/16W	[M]GS
R2077	ERJ3GEYJ472V	4.7K 1/16W	[M]GC
R2077	ERJ3GEYJ682V	6.8K 1/16W	[M]GCS
R2078	ERJ3GEYJ472V	4.7K 1/16W	[M]
R2079	ERJ3GEYJ103V	10K 1/16W	[M]
R2080	ERJ3GEYJ103V	10K 1/16W	[M]GC/GS
R2080	ERJ3GEYJ332V	3.3K 1/16W	[M]GCS
R2081	ERJ3GEYJ103V	10K 1/16W	[M]
R2082	ERJ3GEYJ103V	10K 1/16W	[M]
R2083	ERJ3GEYJ221V	220 1/16W	[M]
R2084	ERJ3GEYJ473V	47K 1/16W	[M]
R2085	ERJ3GEYJ472V	4.7K 1/16W	[M]
R2086	ERJ3GEYJ223V	22K 1/16W	[M]
R2087	ERJ3GEYJ223V	22K 1/16W	[M]
R2088	ERJ3GEYJ103V	10K 1/16W	[M]
R2089	ERJ3GEYJ472V	4.7K 1/16W	[M]
R2090	ERJ3GEYJ221V	220 1/16W	[M]
R2091	ERJ3GEYJ103V	10K 1/16W	[M]
R2092	ERJ3GEYJ221V	220 1/16W	[M]
R2093	ERJ3GEYJ182V	1.8K 1/16W	[M]GCS/GS
R2093	ERJ3GEYJ682V	6.8K 1/16W	[M]GC
R2094	ERJ3GEYJ103V	10K 1/16W	[M]
R2095	ERJ3GEYJ472V	4.7K 1/16W	[M]
R2096	ERJ3GEYJ473V	47K 1/16W	[M]

Ref. No.	Part No.	Part Name & Description	Remarks
R2097	ERJ3GEYJ472V	4.7K 1/16W	[M]
R2098	ERJ3GEYJ225V	2.2M 1/16W	[M]
R2099	ERJ3GEYJ104V	100K 1/16W	[M]
R2101	ERJ3GEYJ103V	10K 1/16W	[M]
R2111	ERJ3GEYJ103V	10K 1/16W	[M]
R2112	ERJ3GEYJ183V	18K 1/16W	[M]
R2113	ERJ3GEY0R00V	0 1/16W	[M]
R2114	ERJ3GEYJ153V	15K 1/16W	[M]
R2115	ERJ3GEYJ222V	2.2K 1/16W	[M]
R2160	ERJ3GEYJ333V	33K 1/16W	[M]
R2161	ERJ3GEYJ473V	47K 1/16W	[M]
R2164	ERJ3GEYJ103V	10K 1/16W	[M]
R2165	ERJ3GEYJ682V	6.8K 1/16W	[M]
R2166	ERJ3GEYJ103V	10K 1/16W	[M]
R2167	ERJ3GEYJ682V	6.8K 1/16W	[M]
R2168	ERJ3GEYJ222V	2.2K 1/16W	[M]
R2169	ERJ3GEYJ104V	100K 1/16W	[M]
R2170	ERJ3GEYJ222V	2.2K 1/16W	[M]
R2171	ERJ3GEYJ273V	27K 1/16W	[M]
R2172	ERJ3GEYJ182V	1.8K 1/16W	[M]
R2175	ERJ3GEYJ562V	5.6K 1/16W	[M]
R2176	ERJ3GEYJ393V	39K 1/16W	[M]
R2177	ERJ3GEYJ220V	22 1/16W	[M]
R2178	ERJ3GEYJ220V	22 1/16W	[M]
R2179	ERJ3GEYJ220V	22 1/16W	[M]
R2180	ERJ3GEYJ220V	22 1/16W	[M]
R2181	ERJ3GEYJ332V	3.3K 1/16W	[M]
R2182	ERJ3GEYJ102V	1K 1/16W	[M]
R2185	ERJ3GEYJ122V	1.2K 1/16W	[M]
R2188	ERJ3GEYJ222V	2.2K 1/16W	[M]
R2189	ERJ3GEYJ152V	1.5K 1/16W	[M]
R2191	ERJ3GEYJ183V	18K 1/16W	[M]
R2193	ERJ3GEY0R00V	0 1/16W	[M]
R2194	ERJ3GEYJ272V	2.7K 1/16W	[M]
R2201	ERJ3GEYJ103V	10K 1/16W	[M]
R2211	ERJ3GEYJ103V	10K 1/16W	[M]
R2212	ERJ3GEYJ183V	18K 1/16W	[M]
R2214	ERJ3GEYJ153V	15K 1/16W	[M]
R2215	ERJ3GEYJ222V	2.2K 1/16W	[M]
R2218	ERJ3GEY0R00V	0 1/16W	[M]
R2260	ERJ3GEYJ333V	33K 1/16W	[M]
R2261	ERJ3GEYJ473V	47K 1/16W	[M]
R2264	ERJ3GEYJ103V	10K 1/16W	[M]
R2265	ERJ3GEYJ682V	6.8K 1/16W	[M]
R2266	ERJ3GEYJ103V	10K 1/16W	[M]
R2267	ERJ3GEYJ682V	6.8K 1/16W	[M]
R2268	ERJ3GEYJ222V	2.2K 1/16W	[M]
R2269	ERJ3GEYJ104V	100K 1/16W	[M]
R2270	ERJ3GEYJ222V	2.2K 1/16W	[M]
R2271	ERJ3GEYJ563V	56K 1/16W	[M]
R2275	ERJ3GEYJ562V	5.6K 1/16W	[M]
R2276	ERJ3GEYJ393V	39K 1/16W	[M]
R2277	ERJ3GEYJ220V	22 1/16W	[M]
R2278	ERJ3GEYJ220V	22 1/16W	[M]
R2279	ERJ3GEYJ220V	22 1/16W	[M]
R2280	ERJ3GEYJ220V	22 1/16W	[M]
R2281	ERJ3GEYJ332V	3.3K 1/16W	[M]
R2282	ERJ3GEYJ102V	1K 1/16W	[M]
R2285	ERJ3GEYJ122V	1.2K 1/16W	[M]
R2288	ERJ3GEYJ222V	2.2K 1/16W	[M]
R2289	ERJ3GEYJ152V	1.5K 1/16W	[M]
R2291	ERJ3GEYJ183V	18K 1/16W	[M]
R2293	ERJ3GEY0R00V	0 1/16W	[M]
R2294	ERJ3GEYJ272V	2.7K 1/16W	[M]
R2300	ERJ3GEYJ223V	22K 1/16W	[M]
R2301	ERJ3GEYJ473V	47K 1/16W	[M]
R2302	ERJ3GEYJ223V	22K 1/16W	[M]
R2303	ERJ3GEYJ332V	3.3K 1/16W	[M]
R2304	ERJ3GEYJ123V	12K 1/16W	[M]
R2307	ERJ3GEYJ182V	1.8K 1/16W	[M]
R2308	ERJ3GEY0R00V	0 1/16W	[M]
R2309	ERJ3GEYJ153V	15K 1/16W	[M]
R2312	ERJ3GEYJ102V	1K 1/16W	[M]

Ref. No.	Part No.	Part Name & Description	Remarks
R2313	ERJ3GEYJ223V	22K 1/16W	[M]
R2314	ERJ3GEYJ103V	10K 1/16W	[M]
R2315	ERJ3GEYJ103V	10K 1/16W	[M]
R2317	ERJ3GEYJ223V	22K 1/16W	[M]
R2319	ERJ3GEYJ473V	47K 1/16W	[M]
R2320	ERJ3GEYJ473V	47K 1/16W	[M]
R2321	ERJ3GEYJ273V	27K 1/16W	[M]
R2322	ERJ3GEYJ223V	22K 1/16W	[M]
R2323	ERJ3GEYJ472V	4.7K 1/16W	[M]
R2324	ERJ3GEYJ223V	22K 1/16W	[M]
R2325	ERJ3GEYJ223V	22K 1/16W	[M]
R2326	ERJ3GEYJ123V	12K 1/16W	[M]
R2327	ERJ3GEYJ273V	27K 1/16W	[M]
R2328	ERJ3GEYJ563V	56K 1/16W	[M]
R2329	ERJ3GEYJ222V	2.2K 1/16W	[M]
R2330	ERJ3GEYJ561V	560 1/16W	[M]
R2331	ERJ3GEYJ472V	4.7K 1/16W	[M]
R2332	ERJ3GEYJ223V	22K 1/16W	[M]
R2333	ERJ3GEYJ333V	33K 1/16W	[M]
R2334	ERJ3GEYJ273V	27K 1/16W	[M]
R2335	ERJ3GEYJ223V	22K 1/16W	[M]
R2336	ERJ3GEYJ123V	12K 1/16W	[M]
R2338	ERJ3GEYJ182V	1.8K 1/16W	[M]
R2339	ERJ3GEYJ272V	2.7K 1/16W	[M]
R2341	ERJ3GEYJ472V	4.7K 1/16W	[M]
R2342	ERJ3GEYJ102V	1K 1/16W	[M]
R2400	ERJ3GEYJ223V	22K 1/16W	[M]
R2401	ERJ3GEYJ473V	47K 1/16W	[M]
R2402	ERJ3GEYJ223V	22K 1/16W	[M]
R2403	ERJ3GEYJ332V	3.3K 1/16W	[M]
R2404	ERJ3GEYJ123V	12K 1/16W	[M]
R2405	ERJ3GEYJ562V	5.6K 1/16W	[M]
R2406	ERJ3GEYJ562V	5.6K 1/16W	[M]
R2407	ERJ3GEYJ182V	1.8K 1/16W	[M]
R2408	ERJ3GEY0R00V	0 1/16W	[M]
R2409	ERJ3GEYJ153V	15K 1/16W	[M]
R2412	ERJ3GEYJ102V	1K 1/16W	[M]
R2413	ERJ3GEYJ223V	22K 1/16W	[M]
R2414	ERJ3GEYJ103V	10K 1/16W	[M]
R2415	ERJ3GEYJ103V	10K 1/16W	[M]
R2417	ERJ3GEYJ223V	22K 1/16W	[M]
R2419	ERJ3GEYJ223V	22K 1/16W	[M]
R2420	ERJ3GEYJ223V	22K 1/16W	[M]
R2421	ERJ3GEYJ223V	22K 1/16W	[M]
R2422	ERJ3GEYJ472V	4.7K 1/16W	[M]
R2423	ERJ3GEYJ123V	12K 1/16W	[M]
R2424	ERJ3GEYJ223V	22K 1/16W	[M]
R2425	ERJ3GEYJ223V	22K 1/16W	[M]
R2426	ERJ3GEYJ472V	4.7K 1/16W	[M]
R2432	ERJ3GEYJ223V	22K 1/16W	[M]
R2433	ERJ3GEYJ333V	33K 1/16W	[M]
R2434	ERJ3GEYJ273V	27K 1/16W	[M]
R2435	ERJ3GEYJ223V	22K 1/16W	[M]
R2436	ERJ3GEYJ123V	12K 1/16W	[M]
R2439	ERJ3GEYJ272V	2.7K 1/16W	[M]
R2440	ERJ3GEYJ472V	4.7K 1/16W	[M]
R2441	ERJ3GEYJ472V	4.7K 1/16W	[M]
R2500	ERJ3GEYJ223V	22K 1/16W	[M]
R2501	ERJ3GEYJ153V	15K 1/16W	[M]
R2502	ERJ3GEYJ103V	10K 1/16W	[M]
R2503	ERJ3GEYJ562V	5.6K 1/16W	[M]
R2510	ERJ3GEYJ332V	3.3K 1/16W	[M]
R2511	ERJ3GEYJ103V	10K 1/16W	[M]
R2512	ERJ3GEYJ272V	2.7K 1/16W	[M]
R2600	ERJ3GEYJ332V	3.3K 1/16W	[M]
R2601	ERJ3GEYJ153V	15K 1/16W	[M]
R2602	ERJ3GEYJ103V	10K 1/16W	[M]
R2603	ERJ3GEYJ103V	10K 1/16W	[M]
R2604	ERJ3GEYJ103V	10K 1/16W	[M]
R2605	ERJ3GEYJ183V	18K 1/16W	[M]
R2606	ERJ3GEYJ823V	82K 1/16W	[M]
R2607	ERJ3GEYJ103V	10K 1/16W	[M]
R2608	ERJ3GEYJ563V	56K 1/16W	[M]

Ref. No.	Part No.	Part Name & Description	Remarks
R2609	ERJ3GEYJ152V	1.5K 1/16W	[M]
R2610	ERJ3GEYJ393V	39K 1/16W	[M]
R2611	ERJ3GEYJ182V	1.8K 1/16W	[M]
R2612	ERJ3GEYJ683V	68K 1/16W	[M]
R2617	ERJ3GEYJ682V	6.8K 1/16W	[M]
R2619	ERJ3GEYJ103V	10K 1/16W	[M]
R2620	ERJ3GEYJ823V	82K 1/16W	[M]
R2621	ERJ3GEYJ393V	39K 1/16W	[M]
R2626	ERJ3GEYJ683V	68K 1/16W	[M]
R2627	ERJ3GEYJ683V	68K 1/16W	[M]
R2628	ERJ3GEYJ103V	10K 1/16W	[M]
R2629	ERJ3GEYJ103V	10K 1/16W	[M]
R2630	ERJ3GEY0R00V	0 1/16W	[M]
R2633	ERJ3GEYJ391V	390 1/16W	[M]
R2634	ERJ3GEYJ391V	390 1/16W	[M]
R2803	ERJ3GEYJ102V	1K 1/16W	[M]
R2804	ERJ3GEYJ102V	1K 1/16W	[M]
R2807	ERJ3GEYJ102V	1K 1/16W	[M]
R2809	ERJ3GEYJ750V	75 1/16W	[M]
R2812	ERJ3GEYJ750V	75 1/16W	[M]
R2813	ERJ3GEYJ750V	75 1/16W	[M]
R2816	ERJ3GEYJ750V	75 1/16W	[M]
R2817	ERJ3GEYJ750V	75 1/16W	[M]
R2818	ERJ3GEYJ750V	75 1/16W	[M]
R2904	ERJ3GEYJ471V	470 1/16W	[M]
R2905	ERJ6GEYJ682V	6.8K 1/10W	[M]
R2906	ERG2SJ471E	470 2W	[M]
R2907	ERJ3GEYJ272V	2.7K 1/16W	[M]
R2908	ERJ3GEYJ561V	560 1/16W	[M]
R2913	ERG2SJ471E	470 2W	[M]
R2914	ERJ6GEYJ682V	6.8K 1/10W	[M]
R2915	ERJ3GEYJ272V	2.7K 1/16W	[M]
R2918	ERJ3GEYJ103V	10K 1/16W	[M]
R2919	ERJ3GEYJ102V	1K 1/16W	[M]
R2920	ERJ3GEYJ472V	4.7K 1/16W	[M]
R2921	ERJ3GEYJ331V	330 1/16W	[M]
R2922	ERJ3GEYJ393V	39K 1/16W	[M]
R2923	ERJ3GEYJ153V	15K 1/16W	[M]
R2925	ERJ2GEJ103X	10K 2W	[M]
R2926	ERX2SJ1R5E	1.5 2W	[M]
R2929	ERJ3GEYJ220V	22 1/16W	[M]
R2933	ERJ3GEYJ151V	150 1/16W	[M]
R2934	ERJ3GEYJ821V	820 1/16W	[M]
R2935	ERJ3GEYJ472V	4.7K 1/16W	[M]
R2936	ERJ3GEYJ560V	56 1/16W	[M]
R2941	ERJ3GEYJ223V	22K 1/16W	[M]
R2942	ERJ3GEYJ222V	2.2K 1/16W	[M]
R2943	ERJ3GEYJ272V	2.7K 1/16W	[M]
R2944	ERJ3GEYJ472V	4.7K 1/16W	[M]
R2950	ERJ3GEYJ102V	1K 1/16W	[M]
R2951	ERG2SJ470E	47 2W	[M]
R2952	ERG2SJ471E	470 2W	[M]
R2960	ERJ3GEYJ101V	100 1/16W	[M]
R2964	ERJ3GEYJ220V	22 1/16W	[M]
R2967	ERJ6GEYJ681V	680 1/10W	[M]
R2968	ERJ6GEYJ681V	680 1/10W	[M]
R2969	ERJ6GEYJ681V	680 1/10W	[M]
R2970	ERJ3GEYJ220V	22 1/16W	[M]
R2971	ERX2SJ1R5E	1.5 2W	[M]
R2972	ERJ3GEYJ220V	22 1/16W	[M]
R2973	ERJ3GEYJ151V	150 1/16W	[M]
R2974	ERD2FCVJ4R7T	4.7 1/4W	[M]
R2975	ERD2FCVJ4R7T	4.7 1/4W	[M]
R2976	ERJ3GEYJ4R7V	4.7 1/16W	[M]
R3780	ERJ2GEJ152X	1.5K 2W	[M]
R3781	ERJ2GEJ152X	1.5K 2W	[M]
R3901	ERJ2GEJ511X	510 2W	[M]
R3902	ERJ2GEJ103X	10K 2W	[M]
R3903	ERJ2GEJ103X	10K 2W	[M]
R3904	ERJ2GEJ472X	4.7K 2W	[M]
R3905	ERJ2GEJ202X	2K 2W	[M]
R3906	ERJ2GEJ472X	4.7K 2W	[M]
R3907	ERJ2GEJ222X	2.2K 2W	[M]

Ref. No.	Part No.	Part Name & Description	Remarks
R3911	ERJ2GEJ102X	1K 2W	[M]
R3912	ERJ2GEJ472X	4.7K 2W	[M]
R3921	ERJ2GE0R00X	0 2W	[M]
R3924	ERJ2GE0R00X	0 2W	[M]
R3941	ERJ2GEJ273X	27K 2W	[M]
R3942	ERJ2GEJ224X	220K 2W	[M]
R3943	ERJ2GEJ104X	100K 2W	[M]
R3944	ERJ2GEJ221X	220 2W	[M]
R3945	ERJ2GEJ103X	10K 2W	[M]
R3946	ERJ2GEJ272X	2.7K 2W	[M]
R3947	ERJ2GEJ103X	10K 2W	[M]
R5000	ERJ3GEYJ562V	5.6K 1/16W	[M]
R5001	ERJ3GEYJ562V	5.6K 1/16W	[M]
R5002	ERJ3GEYJ562V	5.6K 1/16W	[M]
R5003	ERJ3GEYJ562V	5.6K 1/16W	[M]
R5004	ERJ8GEYJ100V	10 1/8W	[M]
R5005	ERJ8GEYJ100V	10 1/8W	[M]
R5006	ERJ1TYJ220U	22 1W	[M]
R5007	ERJ1TYJ220U	22 1W	[M]
R5010	ERJ8GEYJ100V	10 1/8W	[M]
R5011	ERJ8GEYJ100V	10 1/8W	[M]
R5019	ERJ3GEYJ683V	68K 1/16W	[M]
R5020	ERJ3GEYJ124V	120K 1/16W	[M]
R5021	ERJ3GEYJ222V	2.2K 1/16W	[M]
R5022	ERJ3GEYJ122V	1.2K 1/16W	[M]
R5030	ERJ3GEYJ562V	5.6K 1/16W	[M]
R5031	ERJ3GEYJ562V	5.6K 1/16W	[M]
R5032	ERJ3GEYJ562V	5.6K 1/16W	[M]
R5033	ERJ3GEYJ562V	5.6K 1/16W	[M]
R5034	ERJ3GEYJ562V	5.6K 1/16W	[M]
R5035	ERJ3GEYJ562V	5.6K 1/16W	[M]
R5036	ERJ3GEYJ562V	5.6K 1/16W	[M]
R5037	ERJ3GEYJ562V	5.6K 1/16W	[M]
R5103	ERJ3GEYJ562V	5.6K 1/16W	[M]
R5104	ERJ3GEYJ562V	5.6K 1/16W	[M]
R5110	ERJ3GEYJ223V	22K 1/16W	[M]
R5111	ERJ3GEYJ124V	120K 1/16W	[M]
R5113	ERJ3GEYJ683V	68K 1/16W	[M]
R5118	ERJ3GEYJ562V	5.6K 1/16W	[M]
R5119	ERJ3GEYJ562V	5.6K 1/16W	[M]
R5200	ERJ8GEYJ100V	10 1/8W	[M]
R5201	ERJ8GEYJ100V	10 1/8W	[M]
R5205	ERJ3GEYJ562V	5.6K 1/16W	[M]
R5206	ERJ3GEYJ562V	5.6K 1/16W	[M]
R5209	ERJ1TYJ220U	22 1W	[M]
R5210	ERJ8GEYJ100V	10 1/8W	[M]
R5211	ERJ8GEYJ100V	10 1/8W	[M]
R5217	ERJ1TYJ220U	22 1W	[M]
R5218	ERJ3GEYJ124V	120K 1/16W	[M]
R5228	ERJ3GEYJ683V	68K 1/16W	[M]
R5300	ERJ1TYJ220U	22 1W	[M]
R5302	ERJ8GEYJ100V	10 1/8W	[M]
R5305	ERJ8GEYJ100V	10 1/8W	[M]
R5306	ERJ3GEYJ562V	5.6K 1/16W	[M]
R5307	ERJ3GEYJ562V	5.6K 1/16W	[M]
R5310	ERJ8GEYJ100V	10 1/8W	[M]
R5311	ERJ8GEYJ100V	10 1/8W	[M]
R5318	ERJ3GEYJ124V	120K 1/16W	[M]
R5319	ERJ1TYJ220U	22 1W	[M]
R5328	ERJ3GEYJ683V	68K 1/16W	[M]
R5400	ERJ1TYJ220U	22 1W	[M]
R5402	ERJ8GEYJ100V	10 1/8W	[M]
R5405	ERJ8GEYJ100V	10 1/8W	[M]
R5410	ERJ8GEYJ100V	10 1/8W	[M]
R5411	ERJ8GEYJ100V	10 1/8W	[M]
R5419	ERJ1TYJ220U	22 1W	[M]
R5501	ERJ3GEYJ102V	1K 1/16W	[M]
R5502	ERJ3GEYJ103V	10K 1/16W	[M]
R5503	ERJ3GEYJ104V	100K 1/16W	[M]
R5504	ERJ3GEYJ220V	22 1/16W	[M]
R5505	ERJ3GEYJ104V	100K 1/16W	[M]
R5506	ERJ3GEYJ682V	6.8K 1/16W	[M]
R5507	ERJ3GEYJ105V	1M 1/16W	[M]

Ref. No.	Part No.	Part Name & Description	Remarks
R5508	ERJ3GEYJ104V	100K 1/16W	[M]
R5509	ERJ3GEY0R00V	0 1/16W	[M]
R5601	ERJ3GEYJ104V	100K 1/16W	[M]
R5602	ERJ3GEYJ103V	10K 1/16W	[M]
R5603	ERJ3GEYJ103V	10K 1/16W	[M]
R5604	ERJ3GEYJ103V	10K 1/16W	[M]
R5605	ERJ3GEYJ104V	100K 1/16W	[M]
R5606	ERJ3GEYJ103V	10K 1/16W	[M]
R5607	ERJ3GEYJ103V	10K 1/16W	[M]
R5608	ERJ3GEYJ103V	10K 1/16W	[M]
R5609	ERJ3GEYJ103V	10K 1/16W	[M]
R5610	ERJ3GEYJ822V	8.2K 1/16W	[M]
R5611	ERJ3GEYJ822V	8.2K 1/16W	[M]
R5702	ERJ3GEY0R00V	0 1/16W	[M]
R5703	ERJ6GEYJ681V	680 1/10W	[M]
R5704	ERX2LJ68MP	0.68 2W	[M]
R5706	ERG2SJ333P	33K 2W	[M]
R5707	ERG2SJ333P	33K 2W	[M]
R5708	ERJ6GEYJ332V	3.3K 1/10W	[M]
R5709	ERJ6GEYJ222V	2.2K 1/10W	[M]
R5710	ERJ6GEYJ103V	10K 1/10W	[M]
R5711	ERJ6GEYJ220V	22 1/10W	[M]
R5712	ERJ6GEYJ222V	2.2K 1/10W	[M]
R5713	ERJ3GEYF182V	1.8K 1/16W	[M]
R5714	ERJ3GEYF473V	47K 1/16W	[M]
R5715	ERJ3GEYJ153V	15K 1/16W	[M]
R5716	ERJ3GEYJ680V	68 1/16W	[M]
R5723	ERJ3GEYF472V	4.7K 1/16W	[M]
R5724	ERJ3GEYF122V	1.2K 1/16W	[M]
R5725	ERJ3GEYF561V	560 1/16W	[M]
R5726	ERJ3GEYJ102V	1K 1/16W	[M]
R5727	ERJ3GEYJ222V	2.2K 1/16W	[M]
R5728	ERJ3GEYF182V	1.8K 1/16W	[M]
R5729	ERJ6GEYJ103V	10K 1/10W	[M]
R5735	ERJM1WSF10MU	0.01 1W	[M]
R5736	ERJ3GEYJ152V	1.5K 1/16W	[M]
R5737	ERJ3GEYJ220V	22 1/16W	[M]
R5739	ERJ6GEYJ122V	1.2K 1/10W	[M]
R5745	ERJ3GEY0R00V	0 1/16W	[M]
R5746	ERJ3GEYJ333V	33K 1/16W	[M]
R5747	ERJ3GEYJ392V	3.9K 1/16W	[M]
R5751	ERDS1TJ474	470K 1/2W	[M] ⚠
R5752	ERJ3GEYJ222V	2.2K 1/16W	[M]
R5753	ERJ3GEYJ223V	22K 1/16W	[M]
R5754	ERJ3GEYJ223V	22K 1/16W	[M]
R5755	ERJ3GEYJ103V	10K 1/16W	[M]
R5756	ERJ3GEYJ103V	10K 1/16W	[M]
R5757	ERJ3GEYJ103V	10K 1/16W	[M]
R5758	ERDS1TJ474	470K 1/2W	[M] ⚠
R5759	ERJ3GEYJ104V	100K 1/16W	[M]
R5760	ERJ3GEYJ103V	10K 1/16W	[M]
R5763	ERJ3GEYF222V	2.2K 1/16W	[M]
R5764	ERJ3GEYJ102V	1K 1/16W	[M]
R5765	ERG2SJ470E	47 2W	[M]
R5766	ERG1SJ220E	22 1W	[M]
R5767	ERJ3GEYJ102V	1K 1/16W	[M]
R5768	ERJ3GEYJ104V	100K 1/16W	[M]
R5769	ERJ3GEYJ104V	100K 1/16W	[M]
R5771	ERJ6GEYJ100V	10 1/10W	[M]
R5772	ERDS1FVJ4R7T	4.7 1/2W	[M]
R5774	ERDS1FVJ4R7T	4.7 1/2W	[M]
R5776	ERJ3GEYJ331V	330 1/16W	[M]
R5777	ERJ3GEYJ121V	120 1/16W	[M]
R5778	ERDS1FVJ4R7T	4.7 1/2W	[M]
R5779	ERJ3GEYJ102V	1K 1/16W	[M]
R5781	ERG2SJ470E	47 2W	[M]
R5782	ERG2SJ470E	47 2W	[M]
R5784	ERJ8GEYJ394V	390K 1/8W	[M]
R5785	ERJ8GEYJ394V	390K 1/8W	[M]
R5786	ERJ3GEYJ104V	100K 1/16W	[M]
R5791	ERJ3GEYJ152V	1.5K 1/16W	[M]
R5792	ERJ3GEYJ225V	2.2M 1/16W	[M]
R5796	ERJ3GEYJ103V	10K 1/16W	[M]

Ref. No.	Part No.	Part Name & Description	Remarks
R5797	ERJ3GEYJ123V	12K 1/16W	[M]
R5798	ERG2SJ470E	47 2W	[M]
R5799	ERG2SJ470E	47 2W	[M]
R5917	ERJ3GEYJ221V	220 1/16W	[M]
R5918	ERJ3GEYJ221V	220 1/16W	[M]
R5970	ERJ3GEYF334V	330K 1/16W	[M]
R5971	ERJ3GEYF334V	330K 1/16W	[M]
R5972	ERJ3GEYF334V	330K 1/16W	[M]
R5973	ERJ3GEYF563V	56K 1/16W	[M]
R5974	ERJ3GEYJ273V	27K 1/16W	[M]
R5975	ERJ3GEYJ223V	22K 1/16W	[M]
R5976	ERJ3GEYJ223V	22K 1/16W	[M]
R6081	ERJ3GEYJ681V	680 1/16W	[M]
R6701	ERJ3GEYJ102V	1K 1/16W	[M]
R6702	ERJ3GEYJ473V	47K 1/16W	[M]
R6703	ERJ3GEYJ103V	10K 1/16W	[M]
R6704	ERJ3GEYJ103V	10K 1/16W	[M]
R6705	ERJ3GEYJ102V	1K 1/16W	[M]
R6706	ERJ3GEYJ102V	1K 1/16W	[M]
R6707	ERJ3GEYJ103V	10K 1/16W	[M]
R6708	ERJ3GEYJ394V	390K 1/16W	[M]
R6709	ERJ3GEYJ101V	100 1/16W	[M]
R6710	ERJ3GEYJ103V	10K 1/16W	[M]
R6807	ERJ3GEYJ223V	22K 1/16W	[M]
R6809	ERJ3GEYJ223V	22K 1/16W	[M]
R6829	ERJ3GEYJ102V	1K 1/16W	[M]
R6905	ERJ3GEYJ681V	680 1/16W	[M]
R6914	ERJ3GEYJ563V	56K 1/16W	[M]
R6916	ERJ3GEYJ680V	68 1/16W	[M]
R6917	ERJ3GEYJ102V	1K 1/16W	[M]
R6918	ERJ3GEYJ223V	22K 1/16W	[M]
R6919	ERJ3GEYJ680V	68 1/16W	[M]
R6922	ERJ3GEYJ182V	1.8K 1/16W	[M]
R6923	ERJ3GEYJ222V	2.2K 1/16W	[M]
R6924	ERJ3GEYJ272V	2.7K 1/16W	[M]
R6925	ERJ3GEYJ102V	1K 1/16W	[M]
R6926	ERJ3GEYJ102V	1K 1/16W	[M]
R6927	ERJ3GEYJ122V	1.2K 1/16W	[M]
R6928	ERJ3GEYJ102V	1K 1/16W	[M]
R6934	ERJ3GEYJ470V	47 1/16W	[M]
R6935	ERJ3GEYJ151V	150 1/16W	[M]
R6936	ERJ3GEYJ151V	150 1/16W	[M]
R6939	ERJ3GEY0R00V	0 1/16W	[M]
R6940	ERJ3GEY0R00V	0 1/16W	[M]
R6948	ERJ3GEYJ101V	100 1/16W	[M]
R6949	ERJ3GEYJ101V	100 1/16W	[M]
R6950	ERJ3GEYJ472V	4.7K 1/16W	[M]
R6951	ERJ3GEYJ472V	4.7K 1/16W	[M]
R8002	ERJ2GEJ473X	47K 2W	[M]
R8003	ERJ2GEJ473X	47K 2W	[M]
R8011	ERJ2GEJ220X	22 2W	[M]
R8012	ERJ2GEJ220X	22 2W	[M]
R8013	ERJ2GEJ220X	22 2W	[M]
R8041	ERJ2GEJ330X	33 2W	[M]
R8153	ERJ2RHD621X	620 2W	[M]
R8154	ERJ2RHD102X	1K 2W	[M]
R8211	ERJ2GEJ103X	10K 2W	[M]
R8221	ERJ2GEJ822X	8.2K 2W	[M]
R8225	ERJ2GEJ822X	8.2K 2W	[M]
R8230	ERJ2GEJ222X	2.2K 2W	[M]
R8231	ERJ2GEJ223X	22K 2W	[M]
R8232	ERJ2GEJ752X	7.5K 2W	[M]
R8251	ERJ6GEYJ6R8V	6.8 1/10W	[M]
R8261	ERJ2GEJ823X	82K 2W	[M]
R8262	ERJ2GEJ153X	15K 2W	[M]
R8263	ERJ2GEJ823X	82K 2W	[M]
R8264	ERJ2GEJ153X	15K 2W	[M]
R8311	ERJ2RHD242X	2.4K 2W	[M]
R8312	ERJ2RHD102X	1K 2W	[M]
R8313	ERJ2RHD912X	9.1K 2W	[M]
R8314	ERJ2GE0R00X	0 2W	[M]
R8321	ERJ3RED680V	68 3W	[M]
R8322	ERJ3GEY0R00V	0 1/16W	[M]

Ref. No.	Part No.	Part Name & Description	Remarks
R8325	ERJ3RED680V	68 3W	[M]
R8326	ERJ3GEY0R00V	0 1/16W	[M]
R8331	ERJ3RED680V	68 3W	[M]
R8332	ERJ3GEY0R00V	0 1/16W	[M]
R8335	ERJ3RED680V	68 3W	[M]
R8341	ERJ3RED680V	68 3W	[M]
R8401	ERJ2GEJ101X	100 2W	[M]
R8420	ERJ2GEJ222X	2.2K 2W	[M]
R8421	ERJ2GE0R00X	0 2W	[M]
R8531	ERJ2GEJ152X	1.5K 2W	[M]
R8532	ERJ2GEJ222X	2.2K 2W	[M]
R8533	ERJ2GE0R00X	0 2W	[M]
R8541	ERJ2GEJ153X	15K 2W	[M]
R8551	ERJ2GE0R00X	0 2W	[M]
R8552	ERJ2GEJ102X	1K 2W	[M]
R8553	ERJ2GEJ102X	1K 2W	[M]
R8554	ERJ2GEJ680X	68 2W	[M]
R8555	ERJ2GEJ2R2X	2.2 2W	[M]
R8556	ERJ3GEYJ560V	56 1/16W	[M]
R8557	ERJ3GEYJ510V	51 1/16W	[M]
R8558	ERJ2GEJ473X	47K 2W	[M]
R8559	ERJ2GEJ153X	15K 2W	[M]
R8561	ERJ2GE0R00X	0 2W	[M]
R8562	ERJ2GEJ102X	1K 2W	[M]
R8563	ERJ2GEJ102X	1K 2W	[M]
R8564	ERJ2GEJ220X	22 2W	[M]
R8565	ERJ2GEJ2R2X	2.2 2W	[M]
R8566	ERJ3GEYJ560V	56 1/16W	[M]
R8567	ERJ3GEYJ510V	51 1/16W	[M]
R8568	ERJ2GEJ473X	47K 2W	[M]
R8601	ERJ2GEJ104X	100K 2W	[M]
R8611	ERJ2GEJ101X	100 2W	[M]
R8621	ERJ2GEJ105X	1M 2W	[M]
R8622	ERJ2RHD681X	680 2W	[M]
RX3701	D1H410120001	CHIP RESISTOR	[M]
RX3702	D1H81014A024	CHIP RESISTOR	[M]
RX3703	D1H81014A024	CHIP RESISTOR	[M]
RX3704	D1H81014A024	CHIP RESISTOR	[M]
RX3705	D1H81014A024	CHIP RESISTOR	[M]
RX3706	D1H410120001	CHIP RESISTOR	[M]
RX3707	D1H84714A024	CHIP RESISTOR	[M]
RX3708	D1H84714A024	CHIP RESISTOR	[M]
RX3902	D1H410120001	CHIP RESISTOR	[M]
RX8001	D1H410320002	CHIP RESISTOR	[M]
RX8011	D1H88204A024	CHIP RESISTOR	[M]
RX8012	D1H88204A024	CHIP RESISTOR	[M]
RX8013	D1H88204A024	CHIP RESISTOR	[M]
RX8014	D1H88204A024	CHIP RESISTOR	[M]
RX8015	D1H88204A024	CHIP RESISTOR	[M]
RX8016	D1H88204A024	CHIP RESISTOR	[M]
RX8017	D1H88204A024	CHIP RESISTOR	[M]
RX8018	D1H422020001	CHIP RESISTOR	[M]
RX8019	D1H422020001	CHIP RESISTOR	[M]
RX8020	D1H422020001	CHIP RESISTOR	[M]
RX8031	D1H447220001	CHIP RESISTOR	[M]
RX8032	D1H447220001	CHIP RESISTOR	[M]
RX8111	D1H422320002	CHIP RESISTOR	[M]
RX8401	D1H410120001	CHIP RESISTOR	[M]
RX8402	D1H410120001	CHIP RESISTOR	[M]
RX8403	D1H410120001	CHIP RESISTOR	[M]
RX8531	D1H456020001	CHIP RESISTOR	[M]
RX8532	D1H85604A024	CHIP RESISTOR	[M]
RX8533	D1H456020001	CHIP RESISTOR	[M]
RX8534	D1H456020001	CHIP RESISTOR	[M]
RX8611	D1H447220001	CHIP RESISTOR	[M]
RX8691	D1H410320002	CHIP RESISTOR	[M]
W10	ERJ3GEY0R00V	CHIP RESISTOR	[M]
W11	ERJ3GEY0R00V	CHIP RESISTOR	[M]
W12	ERJ3GEY0R00V	CHIP RESISTOR	[M]
W13	ERJ3GEY0R00V	CHIP RESISTOR	[M]
W14	ERJ3GEY0R00V	CHIP RESISTOR	[M]

Ref. No.	Part No.	Part Name & Description	Remarks
W15	ERJ3GEY0R00V	CHIP RESISTOR	[M]
W16	ERJ3GEY0R00V	CHIP RESISTOR	[M]
W601	ERJ3GEY0R00V	CHIP RESISTOR	[M]
W602	ERJ3GEY0R00V	CHIP RESISTOR	[M]
W2242	ERJ6GEY0R00V	CHIP RESISTOR	[M]
W2500	ERJ3GEY0R00V	CHIP RESISTOR	[M]
W2501	ERJ6GEY0R00V	CHIP RESISTOR	[M]
W2502	ERJ6GEY0R00V	CHIP RESISTOR	[M]
W2503	ERJ6GEY0R00V	CHIP RESISTOR	[M]
W2504	ERJ6GEY0R00V	CHIP RESISTOR	[M]
W2505	ERJ3GEY0R00V	CHIP RESISTOR	[M]
W2506	ERJ6GEY0R00V	CHIP RESISTOR	[M]
W2508	ERJ6GEY0R00V	CHIP RESISTOR	[M]
W2509	ERJ3GEY0R00V	CHIP RESISTOR	[M]
W2510	ERJ6GEY0R00V	CHIP RESISTOR	[M]
W2511	ERJ6GEY0R00V	CHIP RESISTOR	[M]
W2512	ERJ6GEY0R00V	CHIP RESISTOR	[M]
W2513	ERJ3GEY0R00V	CHIP RESISTOR	[M]
W2514	ERJ3GEY0R00V	CHIP RESISTOR	[M]
W2515	ERJ6GEY0R00V	CHIP RESISTOR	[M]
W2516	ERJ3GEY0R00V	CHIP RESISTOR	[M]
W2517	ERJ6GEY0R00V	CHIP RESISTOR	[M]
W2518	ERJ6GEY0R00V	CHIP RESISTOR	[M]
W2519	ERJ6GEY0R00V	CHIP RESISTOR	[M]
W2525	ERJ6GEY0R00V	CHIP RESISTOR	[M]
W2526	ERJ3GEY0R00V	CHIP RESISTOR	[M]
W2527	ERJ3GEY0R00V	CHIP RESISTOR	[M]
W2529	ERJ3GEY0R00V	CHIP RESISTOR	[M]
W2530	ERJ3GEY0R00V	CHIP RESISTOR	[M]
W2531	ERJ6GEY0R00V	CHIP RESISTOR	[M]
W2532	ERJ3GEY0R00V	CHIP RESISTOR	[M]
W2533	ERJ3GEY0R00V	CHIP RESISTOR	[M]
W2534	ERJ3GEY0R00V	CHIP RESISTOR	[M]
W2535	ERJ6GEY0R00V	CHIP RESISTOR	[M]
W2536	ERJ3GEY0R00V	CHIP RESISTOR	[M]
W2537	ERJ6GEY0R00V	CHIP RESISTOR	[M]
W2538	ERJ3GEY0R00V	CHIP RESISTOR	[M]
W2539	ERJ3GEY0R00V	CHIP RESISTOR	[M]
W2540	ERJ3GEY0R00V	CHIP RESISTOR	[M]
W2541	ERJ6GEY0R00V	CHIP RESISTOR	[M]
W2542	ERJ3GEY0R00V	CHIP RESISTOR	[M]
W2543	ERJ3GEY0R00V	CHIP RESISTOR	[M]
W2544	ERJ3GEY0R00V	CHIP RESISTOR	[M]
W2545	ERJ3GEY0R00V	CHIP RESISTOR	[M]
W2546	ERJ3GEY0R00V	CHIP RESISTOR	[M]
W2547	ERJ6GEY0R00V	CHIP RESISTOR	[M]
W2548	ERJ3GEY0R00V	CHIP RESISTOR	[M]
W2549	ERJ6GEY0R00V	CHIP RESISTOR	[M]
W2550	ERJ6GEY0R00V	CHIP RESISTOR	[M]
W2551	ERJ3GEY0R00V	CHIP RESISTOR	[M]
W2553	ERJ3GEY0R00V	CHIP RESISTOR	[M]
W2554	ERJ3GEY0R00V	CHIP RESISTOR	[M]
W2555	ERJ6GEY0R00V	CHIP RESISTOR	[M]
W2556	ERJ3GEY0R00V	CHIP RESISTOR	[M]
W2557	ERJ3GEY0R00V	CHIP RESISTOR	[M]
W2561	ERJ3GEY0R00V	CHIP RESISTOR	[M]
W2564	ERJ6GEY0R00V	CHIP RESISTOR	[M]
W2566	ERJ6GEY0R00V	CHIP RESISTOR	[M]
W2567	ERJ3GEY0R00V	CHIP RESISTOR	[M]
W2568	ERJ6GEY0R00V	CHIP RESISTOR	[M]
W2569	ERJ3GEY0R00V	CHIP RESISTOR	[M]
W2610	ERJ6GEY0R00V	CHIP RESISTOR	[M]
W2612	ERJ3GEY0R00V	CHIP RESISTOR	[M]
W2614	ERJ3GEY0R00V	CHIP RESISTOR	[M]
W2616	ERJ3GEY0R00V	CHIP RESISTOR	[M]
W2620	ERJ6GEY0R00V	CHIP RESISTOR	[M]
W5190	ERJ6GEY0R00V	CHIP RESISTOR	[M]
W5714	ERJ6GEY0R00V	CHIP RESISTOR	[M]
W5715	ERJ3GEY0R00V	CHIP RESISTOR	[M]
W5716	ERJ3GEY0R00V	CHIP RESISTOR	[M]
W5718	ERJ3GEY0R00V	CHIP RESISTOR	[M]
W5723	ERJ3GEY0R00V	CHIP RESISTOR	[M]
W5738	ERJ6GEY0R00V	CHIP RESISTOR	[M]

Ref. No.	Part No.	Part Name & Description	Remarks
W5739	ERJ6GEY0R00V	CHIP RESISTOR	[M]
W5743	ERJ6GEY0R00V	CHIP RESISTOR	[M]
W5746	ERJ6GEY0R00V	CHIP RESISTOR	[M]
W5792	ERJ3GEY0R00V	CHIP RESISTOR	[M]
W5793	ERJ6GEY0R00V	CHIP RESISTOR	[M]
W6701	ERJ3GEY0R00V	CHIP RESISTOR	[M]
W6702	ERJ3GEY0R00V	CHIP RESISTOR	[M]
W6704	ERJ6GEY0R00V	CHIP RESISTOR	[M]
W6706	ERJ3GEY0R00V	CHIP RESISTOR	[M]
W6707	ERJ3GEY0R00V	CHIP RESISTOR	[M]
W6901	ERJ3GEY0R00V	CHIP RESISTOR	[M]
W6902	ERJ6GEY0R00V	CHIP RESISTOR	[M]
W6903	ERJ3GEY0R00V	CHIP RESISTOR	[M]
W6904	ERJ6GEY0R00V	CHIP RESISTOR	[M]
W6906	ERJ6GEY0R00V	CHIP RESISTOR	[M]
W6908	ERJ3GEY0R00V	CHIP RESISTOR	[M]
W6909	ERJ3GEY0R00V	CHIP RESISTOR	[M]
W6910	ERJ6GEY0R00V	CHIP RESISTOR	[M]
W6911	ERJ6GEY0R00V	CHIP RESISTOR	[M]
W6912	ERJ6GEY0R00V	CHIP RESISTOR	[M]
W6913	ERJ6GEY0R00V	CHIP RESISTOR	[M]
W6914	ERJ6GEY0R00V	CHIP RESISTOR	[M]
W6915	ERJ6GEY0R00V	CHIP RESISTOR	[M]
W6916	ERJ6GEY0R00V	CHIP RESISTOR	[M]
W6917	ERJ6GEY0R00V	CHIP RESISTOR	[M]
W6918	ERJ6GEY0R00V	CHIP RESISTOR	[M]
W6919	ERJ6GEY0R00V	CHIP RESISTOR	[M]
W6920	ERJ6GEY0R00V	CHIP RESISTOR	[M]
W6921	ERJ6GEY0R00V	CHIP RESISTOR	[M]
W6922	ERJ6GEY0R00V	CHIP RESISTOR	[M]
W6923	ERJ6GEY0R00V	CHIP RESISTOR	[M]
W6924	ERJ6GEY0R00V	CHIP RESISTOR	[M]
W6925	ERJ6GEY0R00V	CHIP RESISTOR	[M]
W6926	ERJ6GEY0R00V	CHIP RESISTOR	[M]
W6927	ERJ6GEY0R00V	CHIP RESISTOR	[M]
W6928	ERJ6GEY0R00V	CHIP RESISTOR	[M]
W6929	ERJ6GEY0R00V	CHIP RESISTOR	[M]
W6930	ERJ6GEY0R00V	CHIP RESISTOR	[M]
W6931	ERJ6GEY0R00V	CHIP RESISTOR	[M]
W6932	ERJ6GEY0R00V	CHIP RESISTOR	[M]
W6933	ERJ6GEY0R00V	CHIP RESISTOR	[M]
W6934	ERJ6GEY0R00V	CHIP RESISTOR	[M]
W6935	ERJ6GEY0R00V	CHIP RESISTOR	[M]
W6936	ERJ6GEY0R00V	CHIP RESISTOR	[M]
W6937	ERJ3GEY0R00V	CHIP RESISTOR	[M]
W6938	ERJ6GEY0R00V	CHIP RESISTOR	[M]
W6939	ERJ3GEY0R00V	CHIP RESISTOR	[M]
W6940	ERJ6GEY0R00V	CHIP RESISTOR	[M]
W6941	ERJ6GEY0R00V	CHIP RESISTOR	[M]
W6942	ERJ6GEY0R00V	CHIP RESISTOR	[M]
W6943	ERJ6GEY0R00V	CHIP RESISTOR	[M]
W6944	ERJ6GEY0R00V	CHIP RESISTOR	[M]
W6945	ERJ6GEY0R00V	CHIP RESISTOR	[M]
W6946	ERJ6GEY0R00V	CHIP RESISTOR	[M]
W6947	ERJ6GEY0R00V	CHIP RESISTOR	[M]
W6948	ERJ6GEY0R00V	CHIP RESISTOR	[M]
W6949	ERJ6GEY0R00V	CHIP RESISTOR	[M]
W6950	ERJ3GEY0R00V	CHIP RESISTOR	[M]
W6951	ERJ6GEY0R00V	CHIP RESISTOR	[M]
W6952	ERJ6GEY0R00V	CHIP RESISTOR	[M]
W6953	ERJ6GEY0R00V	CHIP RESISTOR	[M]
W6954	ERJ6GEY0R00V	CHIP RESISTOR	[M]
W6955	ERJ6GEY0R00V	CHIP RESISTOR	[M]
W6956	ERJ6GEY0R00V	CHIP RESISTOR	[M]
W6957	ERJ6GEY0R00V	CHIP RESISTOR	[M]
W6958	ERJ6GEY0R00V	CHIP RESISTOR	[M]
W6959	ERJ6GEY0R00V	CHIP RESISTOR	[M]
W6960	ERJ6GEY0R00V	CHIP RESISTOR	[M]
W6961	ERJ6GEY0R00V	CHIP RESISTOR	[M]
W6962	ERJ6GEY0R00V	CHIP RESISTOR	[M]
W6963	ERJ6GEY0R00V	CHIP RESISTOR	[M]
W6964	ERJ6GEY0R00V	CHIP RESISTOR	[M]
W6965	ERJ6GEY0R00V	CHIP RESISTOR	[M]

Ref. No.	Part No.	Part Name & Description	Remarks
W6966	ERJ6GEY0R00V	CHIP RESISTOR	[M]
W6967	ERJ6GEY0R00V	CHIP RESISTOR	[M]
W6968	ERJ6GEY0R00V	CHIP RESISTOR	[M]
W6969	ERJ6GEY0R00V	CHIP RESISTOR	[M]
W6970	ERJ6GEY0R00V	CHIP RESISTOR	[M]
W6971	ERJ6GEY0R00V	CHIP RESISTOR	[M]
W6972	ERJ6GEY0R00V	CHIP RESISTOR	[M]
W6973	ERJ3GEY0R00V	CHIP RESISTOR	[M]
W6974	ERJ6GEY0R00V	CHIP RESISTOR	[M]
W6975	ERJ6GEY0R00V	CHIP RESISTOR	[M]
W6976	ERJ6GEY0R00V	CHIP RESISTOR	[M]
W6977	ERJ6GEY0R00V	CHIP RESISTOR	[M]
W6978	ERJ3GEY0R00V	CHIP RESISTOR	[M]
W6979	ERJ6GEY0R00V	CHIP RESISTOR	[M]
W6980	ERJ6GEY0R00V	CHIP RESISTOR	[M]
W6981	ERJ6GEY0R00V	CHIP RESISTOR	[M]
W6982	ERJ6GEY0R00V	CHIP RESISTOR	[M]
W6983	ERJ6GEY0R00V	CHIP RESISTOR	[M]
W6984	ERJ6GEY0R00V	CHIP RESISTOR	[M]
W6985	ERJ3GEY0R00V	CHIP RESISTOR	[M]
W6986	ERJ6GEY0R00V	CHIP RESISTOR	[M]
W6987	ERJ6GEY0R00V	CHIP RESISTOR	[M]
W6988	ERJ3GEY0R00V	CHIP RESISTOR	[M]
W6989	ERJ6GEY0R00V	CHIP RESISTOR	[M]
W6990	ERJ6GEY0R00V	CHIP RESISTOR	[M]
W6991	ERJ6GEY0R00V	CHIP RESISTOR	[M]
W6992	ERJ6GEY0R00V	CHIP RESISTOR	[M]
W6993	ERJ6GEY0R00V	CHIP RESISTOR	[M]
W6998	ERJ6GEY0R00V	CHIP RESISTOR	[M]
W6999	ERJ6GEY0R00V	CHIP RESISTOR	[M]
MIC1	ERJ3GEY0R00V	CHIP RESISTOR	[M]
MIC2	ERJ3GEY0R00V	CHIP RESISTOR	[M]
MIC3	ERJ3GEY0R00V	CHIP RESISTOR	[M]
MIC4	ERJ3GEY0R00V	CHIP RESISTOR	[M]
K3702	ERJ3GEY0R00V	CHIP RESISTOR	[M]
K3903	ERJ3GEY0R00V	CHIP RESISTOR	[M]
K3905	ERJ2GE0R00X	CHIP RESISTOR	[M]
K8003	ERJ3GEY0R00V	CHIP RESISTOR	[M]GC/GS
K8004	ERJ3GEY0R00V	CHIP RESISTOR	[M]GCS
K8008	ERJ3GEY0R00V	CHIP RESISTOR	[M]GC/GS
K8009	ERJ3GEY0R00V	CHIP RESISTOR	[M]GCS
K8251	ERJ3GEY0R00V	CHIP RESISTOR	[M]
K8321	ERJ2GE0R00X	CHIP RESISTOR	[M]
K8325	ERJ2GE0R00X	CHIP RESISTOR	[M]
K8331	ERJ2GE0R00X	CHIP RESISTOR	[M]
K8335	ERJ2GE0R00X	CHIP RESISTOR	[M]
K8341	ERJ2GE0R00X	CHIP RESISTOR	[M]
		CAPACITORS	
C984	ECA1EAK100XE	10 25V	[M]
C2000	ECJ1VB1H104K	0.1 50V	[M]
C2001	ECJ1VB1H104K	0.1 50V	[M]
C2003	ECA1HM220B	22 50V	[M]
C2004	ECJ1VB1H103K	0.01 50V	[M]
C2006	ECEA1HKA4R7B	4.7 50V	[M]
C2007	ECJ1VB1C104K	0.1 16V	[M]
C2008	ECA1AM102B	1000 10V	[M]
C2009	ECJ1VB1H104K	0.1 50V	[M]
C2010	ECJ1VB1H331K	330P 50V	[M]
C2011	ECJ1VB1H331K	330P 50V	[M]
C2012	ECJ1VB1H331K	330P 50V	[M]
C2013	ECJ1VB1H223K	0.022 50V	[M]
C2017	ECJ1VB1H103K	0.01 50V	[M]
C2018	ECA1EAK470XB	47 25V	[M]
C2019	ECA1EAK470XB	47 25V	[M]
C2020	ECJ1VB1H103K	0.01 50V	[M]
C2021	ECA1AM221B	220 10V	[M]
C2022	EEUFM1A681B	680 10V	[M]

Ref. No.	Part No.	Part Name & Description	Remarks
C2023	ECJ1VB1H221K	220P 50V	[M]
C2024	ECJ1VB1H221K	220P 50V	[M]
C2025	ECJ1VB1H221K	220P 50V	[M]
C2026	ECJ1VB1A105K	1 10V	[M]
C2101	ECJ1VB1C105K	1 16V	[M]
C2111	ECJ1VB1C105K	1 16V	[M]
C2112	ECJ1VB1H471K	470P 50V	[M]
C2114	ECJ1VB1H562K	5600P 50V	[M]
C2115	ECJ1VC1H181J	180P 50V	[M]
C2117	ECJ1VB1C104K	0.1 16V	[M]
C2118	ECJ1VB1C104K	0.1 16V	[M]
C2119	ECJ1VB1C105K	1 16V	[M]
C2120	ECJ1VB1C823K	0.082 16V	[M]
C2121	ECJ1VB1H104K	0.1 50V	[M]
C2161	ECJ1VB1C393K	0.039 16V	[M]
C2162	ECJ1VB1H221K	220P 50V	[M]
C2164	ECJ1VB1H221K	220P 50V	[M]
C2165	ECJ1VC1H101J	100P 50V	[M]
C2169	ECJ1VB1H103K	0.01 50V	[M]
C2170	ECJ1VB1C105K	1 16V	[M]
C2171	ECEA1HKA4R7B	4.7 50V	[M]
C2172	ECJ1VC1H101J	100P 50V	[M]
C2177	ECJ1VB1A105K	1 10V	[M]
C2178	ECJ1VC1H101J	100P 50V	[M]
C2179	ECJ1VC1H470J	47P 50V	[M]
C2180	ECJ1VB1H104K	0.1 50V	[M]
C2181	ECJ1VB1H102K	1000P 50V	[M]
C2183	ECJ1VB1A105K	1 10V	[M]
C2184	ECJ1VB1C105K	1 16V	[M]
C2185	ECJ1VB1C105K	1 16V	[M]
C2186	ECJ1VB1H102K	1000P 50V	[M]
C2187	ECJ1VB1H102K	1000P 50V	[M]
C2188	ECJ1VC1H101J	100P 50V	[M]
C2189	ECJ1VB1C104K	0.1 16V	[M]
C2194	ECJ1VB1H331K	330P 50V	[M]
C2195	ECJ1VB1A105K	1 10V	[M]
C2196	ECJ1VB1H471K	470P 50V	[M]
C2201	ECJ1VB1C105K	1 16V	[M]
C2211	ECJ1VB1C105K	1 16V	[M]
C2212	ECJ1VB1H471K	470P 50V	[M]
C2214	ECJ1VB1H562K	5600P 50V	[M]
C2215	ECJ1VC1H181J	180P 50V	[M]
C2217	ECJ1VB1C104K	0.1 16V	[M]
C2218	ECJ1VB1C104K	0.1 16V	[M]
C2219	ECJ1VB1C105K	1 16V	[M]
C2220	ECJ1VB1C823K	0.082 16V	[M]
C2221	ECJ1VB1H104K	0.1 50V	[M]
C2261	ECJ1VB1C393K	0.039 16V	[M]
C2262	ECJ1VB1H221K	220P 50V	[M]
C2264	ECJ1VB1H221K	220P 50V	[M]
C2265	ECJ1VC1H101J	100P 50V	[M]
C2270	ECJ1VB1C105K	1 16V	[M]
C2272	ECJ1VC1H101J	100P 50V	[M]
C2277	ECJ1VB1A105K	1 10V	[M]
C2278	ECJ1VC1H101J	100P 50V	[M]
C2279	ECJ1VC1H470J	47P 50V	[M]
C2280	ECJ1VB1H104K	0.1 50V	[M]
C2281	ECJ1VB1H102K	1000P 50V	[M]
C2283	ECJ1VB1A105K	1 10V	[M]
C2284	ECJ1VB1C105K	1 16V	[M]
C2285	ECJ1VB1C105K	1 16V	[M]
C2286	ECJ1VB1H102K	1000P 50V	[M]
C2287	ECJ1VB1H102K	1000P 50V	[M]
C2288	ECJ1VC1H101J	100P 50V	[M]
C2289	ECJ1VB1C104K	0.1 16V	[M]
C2294	ECJ1VB1H331K	330P 50V	[M]
C2295	ECJ1VB1A105K	1 10V	[M]
C2300	ECJ1VB0J105K	1 6.3V	[M]
C2301	ECJ1VB1A105K	1 10V	[M]
C2302	ECJ1VB1C333K	0.033 16V	[M]
C2303	ECJ1VB1H104K	0.1 50V	[M]
C2304	ECJ1VB0J105K	1 6.3V	[M]
C2305	ECJ1VB1H332K	3300P 50V	[M]

Ref. No.	Part No.	Part Name & Description	Remarks
C2306	ECJ1VB1A154K	0.15 10V	[M]
C2307	ECJ1VB0J105K	1 6.3V	[M]
C2308	ECJ1VB1A105K	1 10V	[M]
C2309	ECJ1VB1A105K	1 10V	[M]
C2312	ECJ1VB1A105K	1 10V	[M]
C2313	ECJ1VC1H101J	100P 50V	[M]
C2316	ECJ1VB1H103K	0.01 50V	[M]
C2318	ECEA1HKA4R7B	4.7 50V	[M]
C2319	ECJ1VB1H223K	0.022 50V	[M]
C2321	ECJ1VB1H103K	0.01 50V	[M]
C2322	ECJ2YB0J475K	4.7 6.3V	[M]
C2323	ECJ1VB1H471K	470P 50V	[M]
C2324	ECJ1VB1C183K	0.018 16V	[M]
C2325	ECJ1VB1C473K	0.047 16V	[M]
C2326	ECJ1VB1H122K	1200P 50V	[M]
C2327	ECJ1VB1H122K	1200P 50V	[M]
C2328	ECJ1VB1C224K	0.22 16V	[M]
C2400	ECJ1VB0J105K	1 6.3V	[M]
C2401	ECJ2YB0J475K	4.7 6.3V	[M]
C2402	ECJ1VB1C333K	0.033 16V	[M]
C2403	ECJ1VB1H104K	0.1 50V	[M]
C2404	ECJ1VB0J105K	1 6.3V	[M]
C2405	ECJ1VB1H332K	3300P 50V	[M]
C2406	ECJ1VB1A154K	0.15 10V	[M]
C2407	ECJ1VB0J105K	1 6.3V	[M]
C2408	ECJ1VB1A105K	1 10V	[M]
C2412	ECJ1VB1A105K	1 10V	[M]
C2413	ECJ1VC1H101J	100P 50V	[M]
C2415	ECJ1VB1C823K	0.082 16V	[M]
C2416	ECJ1VB1H103K	0.01 50V	[M]
C2421	ECJ1VB1H103K	0.01 50V	[M]
C2422	ECJ1VB1A105K	1 10V	[M]
C2423	ECJ1VB1H471K	470P 50V	[M]
C2424	ECJ1VB1C183K	0.018 16V	[M]
C2425	ECJ1VB1C473K	0.047 16V	[M]
C2426	ECJ1VB1H122K	1200P 50V	[M]
C2427	ECJ1VB1H122K	1200P 50V	[M]
C2428	ECJ1VB1C224K	0.22 16V	[M]
C2429	ECJ1VB1H103K	0.01 50V	[M]
C2430	ECJ1VB1H103K	0.01 50V	[M]
C2500	ECJ1VB0J105K	1 6.3V	[M]
C2501	ECJ1VB0J105K	1 6.3V	[M]
C2502	ECJ1VB1C393K	0.039 16V	[M]
C2503	ECJ1VB1C823K	0.082 16V	[M]
C2506	ECJ1VB1A105K	1 10V	[M]
C2507	ECJ1VB1H471K	470P 50V	[M]
C2509	ECJ1VB1H562K	5600P 50V	[M]
C2600	ECJ1VB1A105K	1 10V	[M]
C2601	ECJ1VB1C823K	0.082 16V	[M]
C2602	ECEA1HKA4R7B	4.7 50V	[M]
C2603	ECJ1VB1A105K	1 10V	[M]
C2604	ECJ1VB1H104K	0.1 50V	[M]
C2605	ECJ1VB1A474K	0.47 10V	[M]
C2606	ECA1HM220B	22 50V	[M]
C2607	ECA1HM220B	22 50V	[M]
C2608	ECEA1HKA100B	10 50V	[M]
C2609	ECJ1VB1A334K	0.33 10V	[M]
C2610	ECJ1VB1A474K	0.47 10V	[M]
C2611	ECJ1VB1H123K	0.012 50V	[M]
C2612	ECJ1VB1H332K	3300P 50V	[M]
C2615	ECJ1VB1H222K	2200P 50V	[M]
C2617	ECJ1VB1A124K	0.12 10V	[M]
C2619	ECEA1HKA100B	10 50V	[M]
C2620	ECEA1HKA100B	10 50V	[M]
C2621	ECJ1VB1A105K	1 10V	[M]
C2624	ECJ1VB1H103K	0.01 50V	[M]
C2625	ECJ1VB1H103K	0.01 50V	[M]
C2801	ECJ1VB1H104K	0.1 50V	[M]
C2802	ECA0JM102B	1000 6.3V	[M]
C2803	ECJ1VB0J105K	1 6.3V	[M]
C2804	ECJ1VB0J105K	1 6.3V	[M]
C2805	ECA0JM331B	330 6.3V	[M]
C2806	ECA0JM331B	330 6.3V	[M]

Ref. No.	Part No.	Part Name & Description	Remarks
C2807	ECJ1VB1H103K	0.01 50V	[M]
C2808	ECA1AM221B	220 10V	[M]
C2809	ECA1AM221B	220 10V	[M]
C2810	ECJ1VB1H103K	0.01 50V	[M]
C2811	ECJ1VB1H104K	0.1 50V	[M]
C2812	ECJ1VB1H104K	0.1 50V	[M]
C2817	ECJ1VB1C105K	1 16V	[M]
C2818	ECJ1VB1C105K	1 16V	[M]
C2819	ECJ1VC1H101J	100P 50V	[M]
C2820	ECJ1VC1H101J	100P 50V	[M]
C2821	ECJ1VC1H101J	100P 50V	[M]
C2822	ECJ1VC1H101J	100P 50V	[M]
C2823	ECJ1VC1H101J	100P 50V	[M]
C2825	ECJ1VC1H101J	100P 50V	[M]
C2826	ECJ1VC1H101J	100P 50V	[M]
C2827	ECJ1VC1H101J	100P 50V	[M]
C2828	ECJ1VC1H101J	100P 50V	[M]
C2829	ECJ1VC1H101J	100P 50V	[M]
C2830	ECJ1VB1H561K	560P 50V	[M]
C2831	ECJ1VB1H561K	560P 50V	[M]
C2832	ECJ1VB1H561K	560P 50V	[M]
C2833	ECJ1VB1H561K	560P 50V	[M]
C2840	ECA0JM102B	1000 6.3V	[M]
C2841	ECA0JM102B	1000 6.3V	[M]
C2901	ECA1HM101B	100 50V	[M]
C2902	ECJ1VB1H103K	0.01 50V	[M]
C2903	ECJ1VB1H103K	0.01 50V	[M]
C2906	ECJ1VB1H103K	0.01 50V	[M]
C2908	ECA1CM221B	220 16V	[M]
C2910	ECJ1VB1H103K	0.01 50V	[M]
C2913	ECA1CM221B	220 16V	[M]
C2914	ECEA1AKA330B	33 10V	[M]
C2919	ECJ1VC1H101J	100P 50V	[M]
C2920	ECJ1VB1H103K	0.01 50V	[M]
C2921	ECA1HM101B	100 50V	[M]
C2922	EEUFC0J821B	820 6.3V	[M]
C2923	ECA1CM221B	220 16V	[M]
C2924	ECJ1VB1H103K	0.01 50V	[M]
C2925	ECA1AM221B	220 10V	[M]
C2930	ECJ1VB1A105K	1 10V	[M]
C2940	ECJ1VB1H103K	0.01 50V	[M]
C2941	ECA1CM221B	220 16V	[M]
C2945	ECJ1VB1H103K	0.01 50V	[M]
C2946	ECA1CM470B	47 16V	[M]
C2952	ECJ1VB1H103K	0.01 50V	[M]
C2956	ECJ1VB1H104K	0.1 50V	[M]
C2959	ECJ1VB1C104K	0.1 16V	[M]
C2961	ECJ1VB1C104K	0.1 16V	[M]
C2962	ECA1CM221B	220 16V	[M]
C2963	ECJ1VB1C104K	0.1 16V	[M]
C2964	ECJ1VB1C104K	0.1 16V	[M]
C2965	ECJ1VB1C104K	0.1 16V	[M]
C2966	ECJ1VB1H104K	0.1 50V	[M]
C2967	ECA1AM221B	220 10V	[M]
C2968	ECA1AM101B	100 10V	[M]
C3701	EEE0GA331WP	330 4V	[M]
C3702	ECJ0EB1A104K	0.1 10V	[M]
C3703	ECJ0EB1A104K	0.1 10V	[M]
C3704	ECJ1VB0J105K	1 6.3V	[M]
C3705	ECJ0EB1A104K	0.1 10V	[M]
C3706	ECJ1VB0J105K	1 6.3V	[M]
C3707	ECJ1VB0J105K	1 6.3V	[M]
C3708	ECJ0EB1A104K	0.1 10V	[M]
C3709	ECJ0EB1A104K	0.1 10V	[M]
C3710	ECJ1VB0J105K	1 6.3V	[M]
C3711	ECJ0EB1A104K	0.1 10V	[M]
C3712	ECJ1VB0J105K	1 6.3V	[M]
C3713	ECJ0EB1A104K	0.1 10V	[M]
C3714	ECJ1VB0J105K	1 6.3V	[M]
C3715	ECJ1VB0J105K	1 6.3V	[M]
C3716	ECJ0EB1A104K	0.1 10V	[M]
C3717	ECJ0EB1A104K	0.1 10V	[M]
C3718	ECJ1VB0J105K	1 6.3V	[M]

Ref. No.	Part No.	Part Name & Description	Remarks
C3719	ECJ1VB0J105K	1 6.3V	[M]
C3720	ECJ0EB1A104K	0.1 10V	[M]
C3721	ECJ0EB1A104K	0.1 10V	[M]
C3722	ECJ1VB0J105K	1 6.3V	[M]
C3723	F1J0J4750002	4.7 6.3V	[M]
C3784	ECJ0EB1A104K	0.1 10V	[M]
C3785	ECJ0EB1C103K	0.01 16V	[M]
C3786	ECJ1VB0J105K	1 6.3V	[M]
C3901	EEE0GA331WP	330 4V	[M]
C3902	EEE0GA331WP	330 4V	[M]
C3903	ECJ0EB1A104K	0.1 10V	[M]
C3904	ECJ0EB1A104K	0.1 10V	[M]
C3905	ECJ0EB1A104K	0.1 10V	[M]
C3906	ECJ1VB0J105K	1 6.3V	[M]
C3907	ECJ0EB1A104K	0.1 10V	[M]
C3908	ECJ0EB1E102K	1000P 25V	[M]
C3909	ECJ0EB1E102K	1000P 25V	[M]
C3910	ECJ0EB1E102K	1000P 25V	[M]
C3911	ECJ0EB1A104K	0.1 10V	[M]
C3912	ECJ0EB1E102K	1000P 25V	[M]
C3913	ECJ0EB1A104K	0.1 10V	[M]
C3914	ECJ1VB0J105K	1 6.3V	[M]
C3915	ECJ0EB1A104K	0.1 10V	[M]
C3916	ECJ0EB1A104K	0.1 10V	[M]
C3917	ECJ1VB0J105K	1 6.3V	[M]
C3931	ECJ0EF1C104Z	0.1 16V	[M]
C3941	ECJ0EB1E271K	270P 25V	[M]
C3954	ECJ0EF1C104Z	0.1 16V	[M]
C3955	ECJ0EB1C103K	0.01 16V	[M]
C3956	ECJ1VB0J105K	1 6.3V	[M]
C3964	ECJ0EB1A104K	0.1 10V	[M]
C5000	ECJ1VB1H102K	1000P 50V	[M]
C5001	ECJ1VB1H102K	1000P 50V	[M]
C5002	ECJ1VB1H104K	0.1 50V	[M]
C5003	ECJ1VB1H104K	0.1 50V	[M]
C5004	ECJ1VB1H104K	0.1 50V	[M]
C5005	ECJ1VB1H104K	0.1 50V	[M]
C5006	ECJ1VB1H331K	330P 50V	[M]
C5007	ECJ1VB1H331K	330P 50V	[M]
C5008	ECJ1VB1H153K	0.015 50V	[M]
C5009	ECJ1VB1H153K	0.015 50V	[M]
C5010	ECJ2VC2A221J	220P 100V	[M]
C5011	ECJ2VC2A221J	220P 100V	[M]
C5012	ECJ2VC2A221J	220P 100V	[M]
C5013	ECJ2VC2A221J	220P 100V	[M]
C5014	ECQV1H474JL3	0.47 50V	[M]
C5015	ECQV1H474JL3	0.47 50V	[M]
C5016	ECJ1VB1H104K	0.1 50V	[M]
C5017	ECJ1VB1H104K	0.1 50V	[M]
C5018	ECJ3YB2A104K	0.1 100V	[M]
C5019	ECJ3YB2A104K	0.1 100V	[M]
C5020	ECJ1VB1H104K	0.1 50V	[M]
C5021	ECJ3YB2A104K	0.1 100V	[M]
C5022	ECJ1VB1H104K	0.1 50V	[M]
C5023	ECJ3YB2A104K	0.1 100V	[M]
C5024	ECJ1VB1H104K	0.1 50V	[M]
C5025	ECJ1VB1H104K	0.1 50V	[M]
C5026	ECJ3YB2A104K	0.1 100V	[M]
C5027	ECJ1VB1H104K	0.1 50V	[M]
C5028	ECJ1VB1H104K	0.1 50V	[M]
C5029	ECJ3YB2A104K	0.1 100V	[M]
C5030	ECJ1VC1H221J	220P 50V	[M]
C5031	ECJ1VB1C224K	0.22 16V	[M]
C5034	ECJ1VB1H103K	0.01 50V	[M]
C5035	ECJ1VB1H103K	0.01 50V	[M]
C5036	ECJ1VB1H103K	0.01 50V	[M]
C5037	ECJ1VB1H103K	0.01 50V	[M]
C5040	ECA2AM220B	22 100V	[M]
C5106	ECJ1VB1H104K	0.1 50V	[M]
C5107	ECJ1VB1H104K	0.1 50V	[M]
C5117	ECJ1VB1H102K	1000P 50V	[M]
C5119	ECJ1VB1H102K	1000P 50V	[M]
C5120	ECJ1VB1H104K	0.1 50V	[M]

Ref. No.	Part No.	Part Name & Description	Remarks
C5121	ECJ1VB1H104K	0.1 50V	[M]
C5133	ECEA1HN470UB	47 50V	[M]
C5134	ECJ1VB1H103K	0.01 50V	[M]
C5135	ECJ1VB1H103K	0.01 50V	[M]
C5136	ECJ1VB1H103K	0.01 50V	[M]
C5137	ECJ1VB1H103K	0.01 50V	[M]
C5200	ECJ1VB1H104K	0.1 50V	[M]
C5201	ECJ1VB1H153K	0.015 50V	[M]
C5202	ECJ1VB1C224K	0.22 16V	[M]
C5203	ECJ2VC2A221J	220P 100V	[M]
C5204	ECJ1VB1H153K	0.015 50V	[M]
C5205	ECJ2VC2A221J	220P 100V	[M]
C5206	ECJ1VB1H104K	0.1 50V	[M]
C5207	ECJ3YB2A104K	0.1 100V	[M]
C5208	ECJ1VB1H104K	0.1 50V	[M]
C5209	ECJ1VB1H104K	0.1 50V	[M]
C5210	ECJ3YB2A104K	0.1 100V	[M]
C5211	ECJ2VC2A221J	220P 100V	[M]
C5212	ECJ1VC1H221J	220P 50V	[M]
C5213	ECJ3YB2A104K	0.1 100V	[M]
C5214	ECJ1VB1H104K	0.1 50V	[M]
C5215	ECJ3YB2A104K	0.1 100V	[M]
C5216	ECJ1VB1H331K	330P 50V	[M]
C5217	ECJ3YB2A104K	0.1 100V	[M]
C5218	ECJ2VC2A221J	220P 100V	[M]
C5219	ECJ3YB2A104K	0.1 100V	[M]
C5220	ECJ1VB1H104K	0.1 50V	[M]
C5221	ECJ1VB1H102K	1000P 50V	[M]
C5222	ECJ1VB1H104K	0.1 50V	[M]
C5223	ECJ1VB1H104K	0.1 50V	[M]
C5224	ECJ1VB1H331K	330P 50V	[M]
C5225	ECQV1H474JL3	0.47 50V	[M]
C5226	ECJ1VB1H104K	0.1 50V	[M]
C5227	ECJ1VB1H104K	0.1 50V	[M]
C5228	ECQV1H474JL3	0.47 50V	[M]
C5231	ECJ1VB1H103K	0.01 50V	[M]
C5232	ECJ1VB1H103K	0.01 50V	[M]
C5240	ECA2AM220B	22 100V	[M]
C5300	ECQV1H474JL3	0.47 50V	[M]
C5301	ECJ1VB1H104K	0.1 50V	[M]
C5302	ECJ1VB1H104K	0.1 50V	[M]
C5303	ECJ1VB1H104K	0.1 50V	[M]
C5304	ECJ1VB1H331K	330P 50V	[M]
C5305	ECJ1VB1H104K	0.1 50V	[M]
C5306	ECJ1VB1H104K	0.1 50V	[M]
C5307	ECJ2VC2A221J	220P 100V	[M]
C5308	ECJ3YB2A104K	0.1 100V	[M]
C5309	ECJ3YB2A104K	0.1 100V	[M]
C5310	ECJ3YB2A104K	0.1 100V	[M]
C5311	ECJ2VC2A221J	220P 100V	[M]
C5312	ECJ1VB1H331K	330P 50V	[M]
C5313	ECJ1VB1H104K	0.1 50V	[M]
C5314	ECJ1VB1A474K	0.47 10V	[M]
C5315	ECJ1VB1H102K	1000P 50V	[M]
C5316	ECJ1VB1H104K	0.1 50V	[M]
C5317	ECJ1VB1A474K	0.47 10V	[M]
C5318	ECJ3YB2A104K	0.1 100V	[M]
C5319	ECJ3YB2A104K	0.1 100V	[M]
C5320	ECJ3YB2A104K	0.1 100V	[M]
C5321	ECJ1VB1C224K	0.22 16V	[M]
C5322	ECJ1VB1H153K	0.015 50V	[M]
C5323	ECJ1VC1H221J	220P 50V	[M]
C5324	ECJ1VB1H153K	0.015 50V	[M]
C5325	ECJ2VC2A221J	220P 100V	[M]
C5326	ECJ2VC2A221J	220P 100V	[M]
C5327	ECJ1VB1H104K	0.1 50V	[M]
C5328	ECQV1H474JL3	0.47 50V	[M]
C5331	ECJ1VB1H103K	0.01 50V	[M]
C5332	ECJ1VB1H103K	0.01 50V	[M]
C5340	ECA2AM220B	22 100V	[M]
C5400	ECQV1H474JL3	0.47 50V	[M]
C5401	ECJ1VB1H104K	0.1 50V	[M]
C5402	ECJ1VB1H104K	0.1 50V	[M]

Ref. No.	Part No.	Part Name & Description	Remarks
C5403	ECJ1VB1H104K	0.1 50V	[M]
C5404	ECJ1VB1H331K	330P 50V	[M]
C5405	ECJ1VB1H104K	0.1 50V	[M]
C5406	ECJ1VB1H104K	0.1 50V	[M]
C5407	ECJ2VC2A221J	220P 100V	[M]
C5408	ECJ3YB2A104K	0.1 100V	[M]
C5409	ECJ3YB2A104K	0.1 100V	[M]
C5410	ECJ3YB2A104K	0.1 100V	[M]
C5411	ECJ2VC2A221J	220P 100V	[M]
C5412	ECJ1VB1H331K	330P 50V	[M]
C5413	ECJ1VB1H104K	0.1 50V	[M]
C5416	ECJ1VB1H104K	0.1 50V	[M]
C5418	ECJ3YB2A104K	0.1 100V	[M]
C5419	ECJ3YB2A104K	0.1 100V	[M]
C5420	ECJ3YB2A104K	0.1 100V	[M]
C5421	ECJ1VB1C224K	0.22 16V	[M]
C5422	ECJ1VB1H153K	0.015 50V	[M]
C5423	ECJ1VC1H221J	220P 50V	[M]
C5424	ECJ1VB1H153K	0.015 50V	[M]
C5425	ECJ2VC2A221J	220P 100V	[M]
C5426	ECJ2VC2A221J	220P 100V	[M]
C5427	ECJ1VB1H104K	0.1 50V	[M]
C5428	ECQV1H474JL3	0.47 50V	[M]
C5440	ECA2AM220B	22 100V	[M]
C5508	ECA1VM471B	470 35V	[M]
C5509	ECA1VM471B	470 35V	[M]
C5510	ECA1VM471B	470 35V	[M]
C5511	ECA1VM471B	470 35V	[M]
C5514	ECJ1VB1H104K	0.1 50V	[M]
C5515	ECJ1VB1H104K	0.1 50V	[M]
C5516	ECA1VM471B	470 35V	[M]
C5517	ECA1VM471B	470 35V	[M]
C5518	ECJ1VB1H104K	0.1 50V	[M]
C5519	ECJ1VB1H104K	0.1 50V	[M]
C5550	ECJ1VB1H471K	470P 50V	[M]
C5551	ECJ1VB1H391K	390P 50V	[M]
C5552	ECJ1VB1H391K	390P 50V	[M]
C5553	ECJ1VC1H101J	100P 50V	[M]
C5555	ECJ3YB1C106K	10 16V	[M]
C5556	ECJ1VB1H471K	470P 50V	[M]
C5557	ECA0JM331B	330 6.3V	[M]
C5601	ECEA1HKA4R7B	4.7 50V	[M]
C5602	ECEA1HKA4R7B	4.7 50V	[M]
C5701	ECQU2A224MLC	0.22	[M] ⚠
C5706	ECQU2A224MLC	0.22	[M] ⚠
C5707	EETUQ2G331JJ	330 400V	[M]
C5708	ECQE6103KF	630V 0.01	[M]
C5709	ECJ1VB1H471K	470P 50V	[M]
C5710	ECKE3D821KBP	820P 2000V	[M]
C5711	F2A1H5600009	56 50V	[M]
C5712	ECJ1VB1H221K	220P 50V	[M]
C5713	ECJ1VB1H102K	1000P 50V	[M]
C5714	F1BAF471A013	470P	[M] ⚠
C5715	ECA1AM101B	100 10V	[M]
C5716	EETUQ2G331JJ	330 400V	[M]
C5717	F2A1V222A061	2200 35V	[M]
C5718	F2A1V222A061	2200 35V	[M]
C5720	ECJ1VB1H104K	0.1 50V	[M]
C5722	ECJ1VB1H104K	0.1 50V	[M]
C5725	ECEA1HKA4R7B	4.7 50V	[M]
C5727	ECCN3A470KGE	47P 1000V	[M]
C5728	ECA1HM220B	22 50V	[M]
C5729	ECA1HM220B	22 50V	[M]
C5732	ECJ1VB1H104K	0.1 50V	[M]
C5733	ECA1CM221B	220 16V	[M]
C5736	F1BAF1020020	1000P	[M] ⚠
C5737	F1BAF1020020	1000P	[M] ⚠
C5738	ECJ1VB1H681K	680P 50V	[M]
C5739	ECEA1HKA100B	10 50V	[M]
C5741	ECA1AM221B	220 10V	[M]
C5742	F2A1V4710036	470 35V	[M]
C5746	ECJ1VB1H104K	0.1 50V	[M]
C5747	ECJ1VB1H104K	0.1 50V	[M]

Ref. No.	Part No.	Part Name & Description	Remarks
C5748	ECJ1VB1H104K	0.1 50V	[M]
C5749	ECJ1VB1H104K	0.1 50V	[M]
C5750	ECJ1VB1H104K	0.1 50V	[M]
C5757	ECJ1VB1H222K	2200P 50V	[M]
C5761	ECJ1VB1H104K	0.1 50V	[M]
C5765	ECEA1AKA101B	100 10V	[M]
C5766	ECEA1AKA221B	220 10V	[M]
C5770	F1B3A122A009	1200P 1000V	[M]
C5771	F1B3A122A009	1200P 1000V	[M]
C5772	F1J2E1030004	0.01 250V	[M]
C5773	F1B3A122A009	1200P 1000V	[M]
C5774	ECJ1VB1H103K	0.01 50V	[M]
C5775	ECJ1VB1H104K	0.1 50V	[M]
C5776	ECJ1VB1H104K	0.1 50V	[M]
C5777	ECJ1VB1H104K	0.1 50V	[M]
C5790	ECJ1VB1H102K	1000P 50V	[M]
C5791	ECA1HM101B	100 50V	[M]
C5792	ECA1AM221B	220 10V	[M]
C5794	ECA1CM470B	47 16V	[M]
C5796	F2A1V4710036	470 35V	[M]
C5797	ECEA1HKA4R7B	4.7 50V	[M]
C5916	ECA1HM101B	100 50V	[M]
C5970	ECEA1HKA4R7B	4.7 50V	[M]
C5971	ECJ1VB1H104K	0.1 50V	[M]
C6101	ECJ1VB1H473K	0.047 50V	[M]
C6201	ECJ1VB1H473K	0.047 50V	[M]
C6701	ECJ1VB1C105K	1 16V	[M]
C6702	ECJ1VC1H331J	330P 50V	[M]
C6703	ECJ1VC1H470J	47P 50V	[M]
C6704	ECJ1VB1H102K	1000P 50V	[M]
C6705	ECJ1VC1H470J	47P 50V	[M]
C6706	ECJ1VB1H104K	0.1 50V	[M]
C6707	ECJ1VC1H470J	47P 50V	[M]
C6708	ECJ1VC1H470J	47P 50V	[M]
C6709	ECJ1VB1H104K	0.1 50V	[M]
C6710	ECJ1VB1C105K	1 16V	[M]
C6711	ECJ1VB1C105K	1 16V	[M]
C6712	ECJ1VB1H221K	220P 50V	[M]
C6801	ECJ1VB1H102K	1000P 50V	[M]
C6805	ECJ1VC1H101K	100P 50V	[M]
C6806	ECJ1VC1H101K	100P 50V	[M]
C6903	ECEA1HKA220B	22 50V	[M]
C6904	ECJ1VB1H102K	1000P 50V	[M]
C6905	ECEA1HKA220B	22 50V	[M]
C6906	ECJ1VC1H101K	100P 50V	[M]
C6909	ECJ1VB1H103K	0.01 50V	[M]
C6910	ECEA0JKA101B	100 6.3V	[M]
C6911	ECJ1VB1H103K	0.01 50V	[M]
C6913	ECEA1HKA3R3B	3.3 50V	[M]
C6916	ECJ1VC1H101K	100P 50V	[M]
C6917	ECJ1VC1H101K	100P 50V	[M]
C6918	ECEA1AKA470B	47 10V	[M]
C6919	ECJ1VC1H101K	100P 50V	[M]
C6920	ECJ1VB1C563K	0.056 16V	[M]
C6921	ECJ1VB1C563K	0.056 16V	[M]
C6922	ECJ1VB1H103K	0.01 50V	[M]
C6923	ECJ1VB1H103K	0.01 50V	[M]
C8001	EEE0GA331WP	330 4V	[M]
C8003	ECJ0EF1C104Z	0.1 16V	[M]
C8004	ECJ0EF1C104Z	0.1 16V	[M]
C8005	ECJ0EF1C104Z	0.1 16V	[M]
C8006	ECJ0EF1C104Z	0.1 16V	[M]
C8007	ECJ0EF1C104Z	0.1 16V	[M]
C8008	ECJ0EF1C104Z	0.1 16V	[M]
C8011	F2G0J101A066	100 6.3V	[M]
C8012	ECJ0EF1C104Z	0.1 16V	[M]
C8013	ECJ0EF1C104Z	0.1 16V	[M]
C8014	ECJ0EF1C104Z	0.1 16V	[M]
C8015	ECJ0EF1C104Z	0.1 16V	[M]
C8016	ECJ0EF1C104Z	0.1 16V	[M]
C8017	ECJ0EF1C104Z	0.1 16V	[M]
C8018	ECJ0EF1C104Z	0.1 16V	[M]
C8019	ECJ0EF1C104Z	0.1 16V	[M]

Ref. No.	Part No.	Part Name & Description	Remarks
C8020	ECJ0EF1C104Z	0.1 16V	[M]
C8021	ECJ0EF1C104Z	0.1 16V	[M]
C8022	ECJ0EF1C104Z	0.1 16V	[M]
C8023	ECJ0EF1C104Z	0.1 16V	[M]
C8024	ECJ0EF1C104Z	0.1 16V	[M]
C8025	ECJ0EF1C104Z	0.1 16V	[M]
C8026	ECJ0EF1C104Z	0.1 16V	[M]
C8051	ECJ1VB0J105K	1 6.3V	[M]
C8052	ECJ0EB1A104K	0.1 10V	[M]
C8053	ECJ0EF1C104Z	0.1 16V	[M]
C8054	ECJ0EC1H221J	220P 50V	[M]
C8055	ECJ1VB0J105K	1 6.3V	[M]
C8056	ECJ0EB1E222K	2200P 25V	[M]
C8057	ECJ1VB0J105K	1 6.3V	[M]
C8111	ECJ0EB1A104K	0.1 10V	[M]
C8112	ECJ1VB0J105K	1 6.3V	[M]
C8113	ECJ0EB1E471K	470P 25V	[M]
C8151	ECJ1VB0J475K	4.7 6.3V	[M]
C8152	ECJ1VB1C105K	1 16V	[M]
C8201	F2G0J101A066	100 6.3V	[M]
C8202	ECJ0EB1A104K	0.1 10V	[M]
C8203	ECJ0EB1A104K	0.1 10V	[M]
C8211	ECJ0EB1E122K	1200P 25V	[M]
C8221	ECJ0EB1E102K	1000P 25V	[M]
C8222	ECJ0EB1E821K	820P 25V	[M]
C8225	ECJ0EB1E102K	1000P 25V	[M]
C8226	ECJ0EB1E102K	1000P 25V	[M]
C8231	ECJ0EB1A104K	0.1 10V	[M]
C8232	ECJ0EB1A104K	0.1 10V	[M]
C8251	F2G0J221A065	220 6.3V	[M]
C8252	ECJ0EF1C104Z	0.1 16V	[M]
C8253	ECJ0EF1C104Z	0.1 16V	[M]
C8255	F2G1C220A037	22 16V	[M]
C8256	ECJ0EF1C104Z	0.1 16V	[M]
C8257	F2G1C470A076	47 16V	[M]
C8258	ECJ0EF1C104Z	0.1 16V	[M]
C8261	ECJ0EF1C104Z	0.1 16V	[M]
C8262	ECJ0EF1C104Z	0.1 16V	[M]
C8301	F2G0J221A031	220 6.3V	[M]
C8302	F2G0J330A031	33 6.3V	[M]
C8303	ECJ0EB1A104K	0.1 10V	[M]
C8304	ECJ0EB1A104K	0.1 10V	[M]
C8305	ECJ0EB1A104K	0.1 10V	[M]
C8306	ECJ0EB1A104K	0.1 10V	[M]
C8311	ECJ0EB1A104K	0.1 10V	[M]
C8312	ECJ1VB0J105K	1 6.3V	[M]
C8313	ECJ1VB0J105K	1 6.3V	[M]
C8401	ECJ0EC1H150J	15P 50V	[M]
C8421	F2G0J101A083	100 6.3V	[M]
C8422	ECJ0EF1C104Z	0.1 16V	[M]
C8423	F2G0J330A083	33 6.3V	[M]
C8424	ECJ0EF1C104Z	0.1 16V	[M]
C8426	ECJ0EF1C104Z	0.1 16V	[M]
C8427	ECJ0EF1C104Z	0.1 16V	[M]
C8428	ECJ0EF1C104Z	0.1 16V	[M]
C8501	F2G0J101A031	100 6.3V	[M]
C8502	ECJ0EF1C104Z	0.1 16V	[M]
C8503	ECJ0EF1C104Z	0.1 16V	[M]
C8504	ECJ0EF1C104Z	0.1 16V	[M]
C8505	ECJ0EF1C104Z	0.1 16V	[M]
C8511	ECJ1VB0J105K	1 6.3V	[M]
C8512	ECJ1VB0J105K	1 6.3V	[M]
C8513	ECJ0EB1A104K	0.1 10V	[M]
C8514	ECJ0EB1A104K	0.1 10V	[M]
C8515	ECJ0EB1A104K	0.1 10V	[M]
C8516	ECJ0EB1A104K	0.1 10V	[M]
C8521	ECJ0EB1A104K	0.1 10V	[M]
C8522	ECJ0EB1A104K	0.1 10V	[M]
C8523	ECJ0EF1C104Z	0.1 16V	[M]
C8524	ECJ0EF1C104Z	0.1 16V	[M]
C8525	ECJ0EB1C562K	5600P 16V	[M]
C8526	ECJ0EB1C183K	0.018 16V	[M]
C8527	ECJ0EB1A333K	0.033 10V	[M]

Ref. No.	Part No.	Part Name & Description	Remarks
C8528	ECJ1VB0J105K	1 6.3V	[M]
C8529	ECJ1VB0J105K	1 6.3V	[M]
C8530	ECJ0EF1C104Z	0.1 16V	[M]
C8531	ECJ0EC1H101J	100P 50V	[M]
C8532	ECJ0EC1H221J	220P 50V	[M]
C8533	ECJ0EF1C104Z	0.1 16V	[M]
C8541	ECJ0EB1E472K	4700P 25V	[M]
C8550	F2G0J330A031	33 6.3V	[M]
C8551	ECJ0EF1C104Z	0.1 16V	[M]
C8552	F2G1C100A072	10 16V	[M]
C8553	F2G0J470A031	47P 6.3V	[M]
C8554	ECJ1VB0J105K	1 6.3V	[M]
C8561	ECJ0EF1C104Z	0.1 16V	[M]
C8562	F2G1C100A072	10 16V	[M]
C8563	F2G0J470A031	47 6.3V	[M]
C8564	ECJ1VB0J105K	1 6.3V	[M]
C8571	ECJ3YB1A106M	10 10V	[M]
C8572	ECJ0EF1C104Z	0.1 16V	[M]
C8601	ECJ0EF1C104Z	0.1 16V	[M]
C8602	ECJ0EB1C153K	0.015 16V	[M]
C8606	ECJ0EF1C104Z	0.1 16V	[M]
C8611	ECJ0EF1C104Z	0.1 16V	[M]
C8621	ECJ0EC1H080D	8P 50V	[M]
C8622	ECJ0EC1H080D	8P 50V	[M]
C8651	ECJ0EF1C104Z	0.1 16V	[M]
C8652	ECJ0EF1C104Z	0.1 16V	[M]
C8691	ECJ0EF1C104Z	0.1 16V	[M]
C8695	ECJ0EF1C104Z	0.1 16V	[M]
C8701	ECJ0EB1A104K	0.1 10V	[M]