PSG1602001CE

Service Manual

Compact Stereo System

Model No. SC-HC395EG
SC-HC397EB
SC-HC397EG

SC-HC395, SC-HC397

Remote Control

Product Color: (K)...Black Type (For HC395EG, HC397EG)
(S)...Silver Type
(W)...White Type (For HC395EG, HC397EG)

⚠ WARNING

This service information is designed for experienced repair technicians only and is not designed for use by the general public.
It does not contain warnings or cautions to advise non-technical individuals of potential dangers in attempting to service a product.
Products powered by electricity should be serviced or repaired only by experienced professional technicians. Any attempt to service or repair the product or products dealt with in this service information by anyone else could result in serious injury or death.

IMPORTANT SAFETY NOTICE

There are special components used in this equipment which are important for safety. These parts are marked by ⚠ in the Schematic Diagrams, Circuit Board Diagrams, Exploded Views and Replacement Parts List. It is essential that these critical parts should be replaced with manufacturer's specified parts to prevent shock, fire or other hazards. Do not modify the original design without permission of manufacturer.

TABLE OF CONTENTS

PAGE

1 Safety Precautions ---- 3
1.1. General Guidelines ---- 3
1.2. Caution for AC Cord (For EB only) ---- 4
1.3. Before Repair and Adjustment ---- 4
1.4. Protection Circuitry ---- 4
1.5. Caution For Fuse Replacement ---- 4
1.6. Safety Part Information ---- 5
2 Warning ---- 6
2.1. Prevention of Electrostatic Discharge (ESD) to Electrostatically Sensitive (ES) Devices ---- 6
2.2. Precaution of Laser Diode ---- 7
2.3. Service caution based on Legal restrictions ---- 7
2.4. Handling Precaution for Traverse Unit ---- 8
3 Service Navigation ---- 9
3.1. Service Information ---- 9
3.2. Software Update through USB ---- 9
4 Specifications ---- 10
5 Location of Controls and Components ---- 11
5.1. Main Unit & Remote Control Key Button Operations ---- 11
6 Service Mode ---- 12
6.1. Self Diagnostic Table ---- 12
6.2. Self Diagnostic Function Error Code ---- 13
7 Troubleshooting Guide ---- 15
8 Disassembly and Assembly Instructions ---- 17
8.1. Service Fixture & Tools ---- 17
8.2. Disassembly flow chart ---- 18
8.3. Types of Screws ---- 20
8.4. Main Parts Location Diagram ---- 20
8.5. Disassembly of Base Stand Unit ---- 21
8.6. Disassembly of Front Ornament Unit (L) & (R) ---- 21
8.7. Disassembly of Door Unit ---- 22
8.8. Disassembly of Door Base ---- 22
8.9. Disassembly of Front Panel Block ---- 23
8.10. Disassembly of Bridge P.C.B. ---- 24
8.11. Disassembly of Motor P.C.B. ---- 25

Panasonic

© Panasonic Corporation 2016. All rights reserved. Unauthorized copying and distribution is a violation of law.

8.12. Disassembly of Gear Block & Arm Spring (Top) ---------- 25
8.13. Disassembly of Arm Spring, Gear Assembly & Arm Assembly ---------- 26
8.14. Replacement of Gear Assembly ---------- 28
8.15. Replacement of Arm Assembly ---------- 29
8.16. Disassembly of Cam Rail Top & Door Slider Top ---------- 31
8.17. Disassembly of Cam Rail Bottom & Door Slider Bottom ---------- 32
8.18. Disassembly of NFC P.C.B. ---------- 33
8.19. Disassembly of SMPS Unit ---------- 34
8.20. Disassembly of SMPS P.C.B. ---------- 34
8.21. Disassembly of FL P.C.B. & Button Ornament Unit ---------- 36
8.22. Disassembly of Button P.C.B. ---------- 36
8.23. Disassembly of CD Mechanism ---------- 37
8.24. Disassembly of CD Interface P.C.B. ---------- 38
8.25. Disassembly of DAB Module and DAB Adapter P.C.B. (For HC397) ---------- 39
8.26. Disassembly of Main P.C.B. (For HC395) ---------- 40
8.27. Disassembly of Main P.C.B. (For HC397) ---------- 41
8.28. Disassembly of Front Speaker (SP1) ---------- 42
8.29. Disassembly of Front Speaker (SP2) ---------- 43
8.30. Disassembly of Passive Radiator Unit (SP3) ---------- 44
8.31. Disassembly of Passive Radiator Unit (SP4) ---------- 45
8.32. Disassembly of Jack Lid ---------- 45
9 Service Position ---------- 47
9.1. Checking of SMPS P.C.B. ---------- 47
9.2. Checking of FL P.C.B. ---------- 48
9.3. Checking of CD Interface P.C.B. ---------- 50
9.4. Checking of Main P.C.B. ---------- 51
10 Block Diagram ---------- 55
10.1. SYSTEM CONTROL (1/2) BLOCK DIAGRAM ---------- 55
10.2. SYSTEM CONTROL (2/2) BLOCK DIAGRAM ---------- 56
10.3. AUDIO BLOCK DIAGRAM ---------- 57
10.4. POWER SUPPLY (1/2) BLOCK DIAGRAM ---------- 58
10.5. POWER SUPPLY (2/2) BLOCK DIAGRAM ---------- 59
11 Wiring Connection Diagram ---------- 60
12 Schematic Diagram ---------- 61
12.1. Schematic Diagram Notes ---------- 61
12.2. CD INTERFACE CIRCUIT ---------- 63
12.3. MAIN (MICON) CIRCUIT (1/2) ---------- 64
12.4. MAIN (MICON) CIRCUIT (2/2) ---------- 65
12.5. MAIN (SUPPLY) CIRCUIT ---------- 66
12.6. MAIN (CD) CIRCUIT ---------- 67
12.7. MAIN (USB) CIRCUIT ---------- 68
12.8. MAIN (DAMP) CIRCUIT ---------- 69
12.9. MAIN (TUNER) CIRCUIT ---------- 70
12.10. BRIDGE, MOTOR & BUTTON CIRCUIT ---------- 71
12.11. FL CIRCUIT ---------- 72
12.12. SMPS CIRCUIT ---------- 73
12.13. DAB ADAPTER CIRCUIT (For HC397) ---------- 74
13 Printed Circuit Board ---------- 75
13.1. CD INTERFACE & BRIDGE P.C.B. ---------- 75
13.2. MAIN P.C.B. (Side A) ---------- 76
13.3. MAIN P.C.B. (Side B) ---------- 77
13.4. MOTOR, FL & BUTTON P.C.B. ---------- 78
13.5. SMPS P.C.B. & DAB ADAPTER P.C.B. (For HC397) ---------- 79
14 Appendix Information of Schematic Diagram ---------- 81
14.1. Voltage Measurement ---------- 81
15 Exploded View and Replacement Parts List ---------- 85
15.1. Exploded View and Mechanical replacement Parts List ---------- 85
15.2. Electrical Replacement Parts List ---------- 94

1 Safety Precautions

1.1. General Guidelines

1. **IMPORTANT SAFETY NOTICE**

   There are special components used in this equipment which are important for safety. These parts are marked by ⚠ in the Schematic Diagrams, Circuit Board Layout, Exploded Views and Replacement Parts List. It is essential that these critical parts should be replaced with manufacturer's specified parts to prevent X-RADIATION, shock, fire, or other hazards. Do not modify the original design without permission of manufacturer.
2. An Isolation Transformer should always be used during the servicing of AC Adaptor whose chassis is not isolated from the AC power line. Use a transformer of adequate power rating as this protects the technician from accidents resulting in personal injury from electrical shocks. It will also protect AC Adaptor from being damaged by accidental shorting that may occur during servicing.
3. When servicing, observe the original lead dress. If a short circuit is found, replace all parts which have been overheated or damaged by the short circuit.
4. After servicing, see to it that all the protective devices such as insulation barriers, insulation papers shields are properly installed.
5. After servicing, make the following leakage current checks to prevent the customer from being exposed to shock hazards.

1.1.1. Leakage Current Cold Check

1. Unplug the AC cord and connect a jumper between the two prongs on the plug.
2. measure the resistance value, with an ohmmeter between the jumpered AC plug and each exposed metallic cabinet part on the equipment such as screwheads, connectors, control shafts, etc. When the exposed metallic part has a return path to the chassis, the reading should be between 1MΩ and 5.2MΩ. When the exposed metal does not have a return path to the chassis, the reading must be ∞

1.1.2. Leakage Current Hot Check

1. Plug the AC cord directly into the AC outlet. Do not use an isolation transformer for this check.
2. Connect a 1.5kΩ, 10 watts resistor, in parallel with a 0.15μF capacitors, between each exposed metallic part on the set and a good earth ground such as a water pipe, as shown in Figure 1-1.
3. Use an AC voltmeter, with 1000 ohms/volt or more sensitivity, to measure the potential across the resistor.
4. Check each exposed metallic part, and measure the voltage at each point.
5. Reverse the AC plug in the AC outlet and repeat each of the above measurements.
6. The potential at any point should not exceed 0.75 volts RMS. A leakage current tester (Simpson Model 229 or equivalent) may be used to make the hot checks, leakage current must not exceed 1/2 milliamp. In case a measurement is outside of the limits specified, there is a possibility of a shock hazard, and the equipment should be repaired and rechecked before it is returned to the customer.

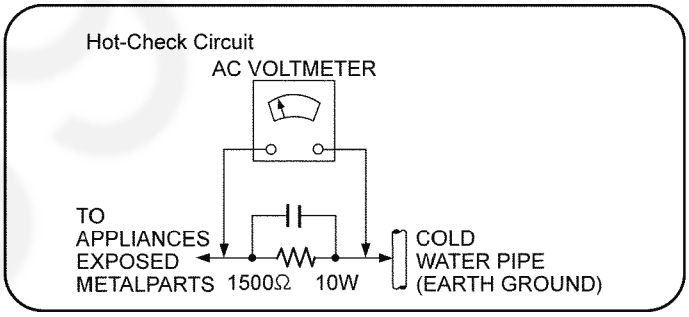

Figure. 1-1

1.2. Caution for AC Cord (For EB only)

(For the AC mains plug of three pins)

For your safety, please read the following text carefully.
This appliance is supplied with a moulded three pin mains plug for your safety and convenience.
A 5-ampere fuse is fitted in this plug.
Should the fuse need to be replaced please ensure that the replacement fuse has a rating of 5-ampere and that it is approved by ASTA or BSI to BS1362.
Check for the ASTA mark or the BSI mark on the body of the fuse.

If the plug contains a removable fuse cover you must ensure that it is refitted when the fuse is replaced.
If you lose the fuse cover the plug must not be used until a replacement cover is obtained.
A replacement fuse cover can be purchased from your local dealer.

Before use

Remove the connector cover.

How to replace the fuse

The location of the fuse differ according to the type of AC mains plug (figures A and B). Confirm the AC mains plug fitted and follow the instructions below.
Illustrations may differ from actual AC mains plug.

1. Open the fuse cover with a screwdriver.

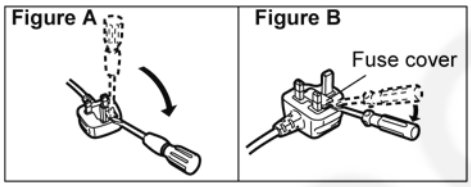

2. Replace the fuse and close or attach the fuse cover.

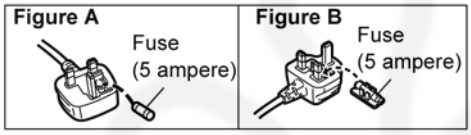

1.3. Before Repair and Adjustment

Disconnect AC power, discharge unit AC Capacitors (C1702, C1710, C1725, C1727 and C1728) through a 10W, 1W resistor to ground.
Caution : DO NOT SHORT-CIRCUIT DIRECTLY (with a screwdriver blade, for instance), as this may destroy solid state devices.
After repairs are completed, restore power gradually using a variac, to avoid overcurrent.

- Current consumption at AC 220 V to 240 V, at 50Hz in NO SIGNAL mode (at volume minimum in FM Tuner mode) should be ~200 mA.

1.4. Protection Circuitry

The protection circuitry may have operated if either of the following conditions are noticed:
- No sound is heard when the power is turned on.
- Sound stops during a performance.

The function of this circuitry is to prevent circuitry damage if, for example, the positive and negative speaker connection wires are "shorted", or if speaker systems with an impedance less than the indicated rated impedance of the amplifier are used.
If this occurs, follow the procedure outlines below:

1. Turn off the power.
2. Determine the cause of the problem and correct it.
3. Turn on the power once again after one minute.

Note:
When the protection circuitry functions, the unit will not operate unless the power is first turned off and then on again.

1.5. Caution For Fuse Replacement

CAUTION:

Replace with the same type fuse:
(Manufacturer: Skygate, Type: SCT, F1, T2A, 250V)

1.6. Safety Part Information

Safety Parts List:

There are special components used in this equipment which are important for safety.

These parts are marked by ⚠ in the Schematic Diagrams, Exploded View & Replacement Parts List. It is essential that these critical parts should be replaced with manufacturer's specified parts to prevent shock, fire or other hazards. Do not modify the original design without permission of manufacturer.

Safety	Ref. No.	Part No.	Part Name & Description	Remarks
⚠	14	RGN3591A-K1	NAME PLATE	HC395EG-K/S/W
⚠	14	RGN3591B-K1	NAME PLATE	HC397EB-S, HC397EG-K/S, HC397EG-W
⚠	49	RMV0429	SMPS BRACKET INSULATOR A	
⚠	51	RMV0432	SMPS COVER INSULATION	
⚠	301	RAE5308Z-V	TRAVERSE UNIT	
⚠	A2	K2CQ2YY00119	AC CORD	HC395EG, HC397EG
⚠	A2	K2CT2YY00097	AC CORD	HC397EB
⚠	A3	RQT0A88-B	O/I BOOK (En)	HC397EB, HC395EG
⚠	A3	RQT0A89-D	O/I BOOK (Ge/Fr/It/Fi)	HC397EB/EG, HC395EG
⚠	A3	RQT0A90-E	O/I BOOK (Sw/Da/Po/Cz)	HC397EB/EG, HC395EG
⚠	A3	RQT0A91-R	O/I BOOK (Sp/Du)	HC395EG
⚠	PCB5	REP5054FA	SMPS P.C.B.	(RTL)
⚠	L1702	G0B922G00002	LINE FILTER	
⚠	T1700	G4DYZ0000077	SWITCHING TRANSFORMER	
⚠	F1	K5G202Y00006	FUSE	
⚠	P1751	K2AA2B000011	AC INLET	
⚠	PC1702	B3PBA0000579	PHOTO COUPLER	
⚠	C1702	F0CAF224A105	0.22uF	
⚠	C1710	F1BAF471A215	470pF	
⚠	C1725	F0CAF104A105	0.1uF	
⚠	C1727	F1BAF102A216	1000pF	
⚠	C1728	F1BAF102A216	1000pF	
⚠	R1724	ERJ12YJ105U	1M 1/10W	
⚠	R1726	ERJ12YJ105U	1M 1/10W	
⚠	Z1752	D4EAY511A182	VARISTOR	

2 Warning

2.1. Prevention of Electrostatic Discharge (ESD) to Electrostatically Sensitive (ES) Devices

Some semiconductor (solid state) devices can be damaged easily by static electricity. Such components commonly are called Electrostatically Sensitive (ES) Devices.

Examples of typical ES devices are IC (integrated circuits) and some field-effect transistors and semiconductor "chip" components.

The following techniques should be used to help reduce the incidence of component damage caused by electrostatic discharge (ESD).

1. Immediately before handling any semiconductor component or semiconductor-equipped assembly, drain off any ESD on your body by touching a known earth ground. Alternatively, obtain and wear a commercially available discharging ESD wrist strap, which should be removed for potential shock reasons prior to applying power to the unit under test.
2. After removing an electrical assembly equipped with ES devices, place the assembly on a conductive surface such as aluminum foil, to prevent electrostatic charge buildup or exposure of the assembly.
3. Use only a grounded-tip soldering iron to solder or unsolder ES devices.
4. Use only an anti-static solder removal device. Some solder removal devices not classified as “anti-static (ESD protected)” can generate electrical charge sufficient to damage ES devices.
5. Do not use freon-propelled chemicals. These can generate electrical charges sufficient to damage ES devices.
6. Do not remove a replacement ES device from its protective package until immediately before you are ready to install it. (Most replacement ES devices are packaged with leads electrically shorted together by conductive foam, aluminum foil or comparable conductive material).
7. Immediately before removing the protective material from the leads of a replacement ES device, touch the protective material to the chassis or circuit assembly into which the device will be installed.
   CAUTION:
   Be sure no power is applied to the chassis or circuit, and observe all other safety precautions.
8. Minimize bodily motions when handling unpackaged replacement ES devices. (Otherwise harmless motion such as the brushing together of your clothes fabric or the lifting of your foot from a carpeted floor can generate static electricity (ESD) sufficient to damage an ES device).

IMPORTANT SAFETY NOTICE

There are special components used in this equipment which are important for safety. These parts are marked by ⚠ in the Schematic Diagrams, Circuit Board Diagrams, Exploded Views and Replacement Parts List. It is essential that these critical parts should be replaced with manufacturer's specified parts to prevent shock, fire or other hazards. Do not modify the original design without permission of manufacturer.

Abgeboca

2.2. Precaution of Laser Diode

CAUTION!
THIS PRODUCT UTILIZES A LASER.
USE OF CONTROLS OR ADJUSTMENTS OR PERFORMANCE OF PROCEDURES OTHER THAN THOSE SPECIFIED HEREIN MAY RESULT IN HAZARDOUS RADIATION EXPOSURE.

Caution:

This product utilizes a laser diode with the unit turned "on", invisible laser radiation is emitted from the pickup lens.
Wavelength: 790 nm (CD)
Maximum output radiation power from pickup: 100 μW/VDE
Laser radiation from the pickup unit is safety level, but be sure the followings:

1. Do not disassemble the pickup unit, since radiation from exposed laser diode is dangerous.
2. Do not adjust the variable resistor on the pickup unit. It was already adjusted.
3. Do not look at the focus lens using optical instruments.
4. Recommend not to look at pickup lens for a long time.

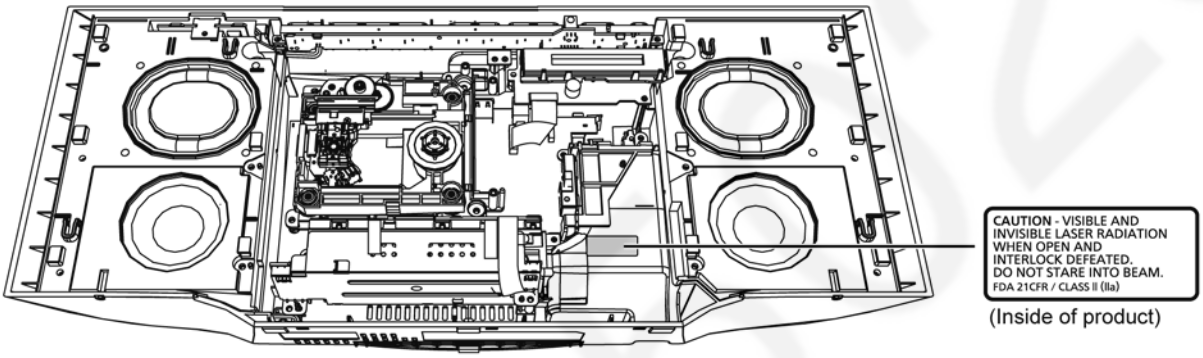

2.3. Service caution based on Legal restrictions

2.3.1. General description about Lead Free Solder (PbF)

The lead free solder has been used in the mounting process of all electrical components on the printed circuit boards used for this equipment in considering the globally environmental conservation.

The normal solder is the alloy of tin (Sn) and lead (Pb). On the other hand, the lead free solder is the alloy mainly consists of tin (Sn), silver (Ag) and Copper (Cu), and the melting point of the lead free solder is higher approx.30 degrees C (86°F) more than that of the normal solder.

Definition of PCB Lead Free Solder being used

The letter of “PbF” is printed either foil side or components side on the PCB using the lead free solder. (See right figure)	PbF

Service caution for repair work using Lead Free Solder (PbF)

- The lead free solder has to be used when repairing the equipment for which the lead free solder is used. (Definition: The letter of “PbF” is printed on the PCB using the lead free solder.)
- To put lead free solder, it should be well molten and mixed with the original lead free solder.
- Remove the remaining lead free solder on the PCB cleanly for soldering of the new IC.
- Since the melting point of the lead free solder is higher than that of the normal lead solder, it takes the longer time to melt the lead free solder.
- Use the soldering iron (more than 70W) equipped with the temperature control after setting the temperature at 350±30 degrees C (662±86°F).

Recommended Lead Free Solder (Service Parts Route.)

- The following 3 types of lead free solder are available through the service parts route.
  RFKZ03D01K----------(0.3mm 100g Reel)
  RFKZ06D01K----------(0.6mm 100g Reel)
  RFKZ10D01K----------(1.0mm 100g Reel)

Note

* Ingredient: Tin (Sn), 96.5%, Silver (Ag) 3.0%, Copper (Cu) 0.5%, Cobalt (Co) / Germanium (Ge) 0.1 to 0.3%

2.4. Handling Precaution for Traverse Unit

The laser diode in the optical pickup unit may break down due to static electricity of clothes or human body. Special care must be taken avoid caution to electrostatic breakdown when servicing and handling the laser diode in the Traverse Unit.

2.4.1. Cautions to Be Taken in Handling the Optical Pickup Unit

The laser diode in the optical pickup unit may be damaged due to electrostatic discharge generating from clothes or human body. Special care must be taken avoid caution to electrostatic discharge damage when servicing the laser diode.

1. Do not give a considerable shock to the optical pickup unit as it has an extremely high-precise structure.
2. To prevent the laser diode from the electrostatic discharge damage, the flexible cable of the optical pickup unit removed should be short-circuited with a short pin or a clip.
3. The flexible cable may be cut off if an excessive force is applied to it. Use caution when handling the flexible cable.
4. The antistatic FPC is connected to the new optical pickup unit. After replacing the optical pickup unit and connecting the flexible cable, cut off the antistatic FPC.

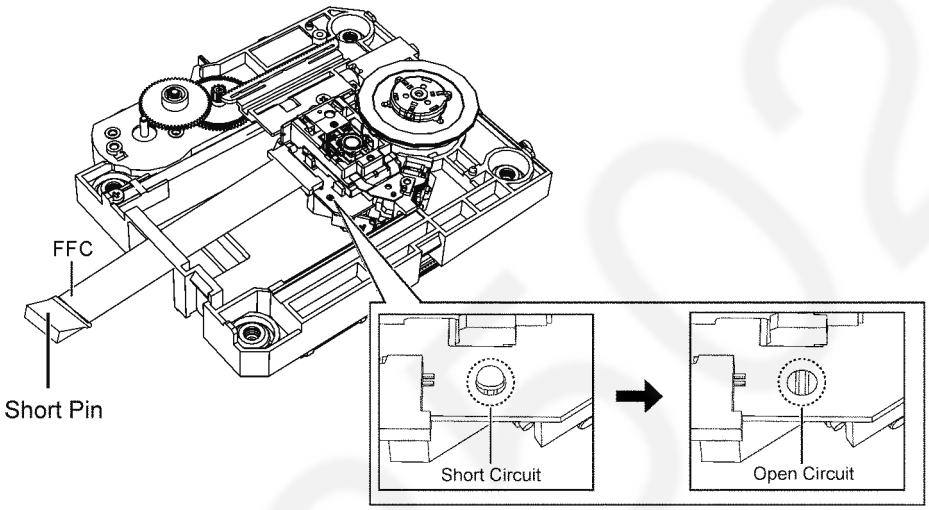

[Caution]
Ground the cable with a clip or a short pin.

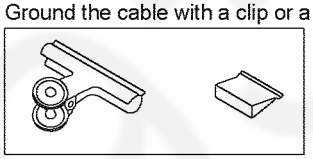

Clip or Short Pin

2.4.2. Grounding for electrostatic breakdown prevention

Some devices such as the CD player use the optical pickup (laser diode) and the optical pickup will be damaged by static electricity in the working environment. Proceed servicing works under the working environment where grounding works is completed.

2.4.2.1. Worktable grounding

1. Put a conductive material (sheet) or iron sheet on the area where the optical pickup is placed, and ground the sheet.

2.4.2.2. Human body grounding

1. Use the anti-static wrist strap to discharge the static electricity form your body.

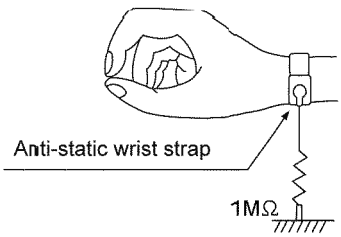

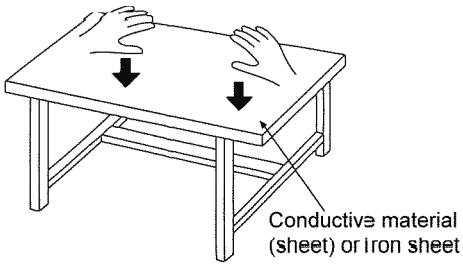

3 Service Navigation

3.1. Service Information

This service manual contains technical information which will allow service personnel's to understand and service this model. Please place orders using the parts list and not the drawing reference numbers.

If the circuit is changed or modified, this information will be followed by supplement service manual to be filed with original service manual.

In case of repair of parts, please refer as follow :

Detective Parts	Repair method
1) IC8004	Change by NFC Kit
2) Main P.C.B.	Change by Main P.C.B. Kit A'ssy
3) NFC P.C.B.	Change by Main P.C.B. Kit A'ssy

3.2. Software Update through USB

In case of update software, please refer as follow :

1. Power On Set
2. Go to USB selector
3. Plug In USB (containing HC395.FRM)
4. FL will show "READING". Then show the update progress "UPD 0 % to UPD 100 %".
5. After finish update, FL will show "SUCCESS"
6. Plug out AC, Plug out USB
7. Plug in AC and Power on set.

A8935029

4 Specifications

■ **General**

Power consumption	26 W
Power consumption in standby mode*1, 2	Approx. 0.2 W
(when “BLUETOOTH STANDBY” is “ON”)*2	Approx. 0.3 W
Power supply	AC 220 V to 240 V, 50 Hz
Dimensions (W x H x D)	500 mm x 205 mm x 92 mm
Operating temperature range	0 °C to +40 °C
Operating humidity range	35% to 80 % RH (no condensation)

■ **Amplifier Section**

Output power:	
RMS Output Power Stereo Mode	
Front Ch (both ch driven)	20 W per channel (8 Ω), 1 kHz, 10% THD
Total RMS Stereo mode power	40 W

■ **Tuner section**

Preset Memory	FM 30 stations
Frequency modulation (FM)	
Frequency range	87.5 MHz to 108.0 MHz (50 kHz step)
Antenna terminals	75 Ω (unbalanced)

■ **DAB section (For HC397)**

DAB memories	20 channels
Frequency band (wavelength)	
Band III	5A to 13F (174.928 MHz to 239.200 MHz)
Sensitivity *BER 4x10^{-4}	
Min requirement	–98 dBm
DAB External Antenna Terminal	F - Connector (75 Ω)

■ **Disc Section**

Disc played [8 cm or 12 cm]	CD, CD-R/RW (CD-DA, MP3*3)
Pick up	
Wavelength	790 nm (CD)

■ **Speaker System Section**

Speaker unit(s)	
Full range	6.5 cm Cone type x 1 per channel
Passive Radiator	8 cm x 2 per channel
Impedance	8 Ω

■ **Terminal Section**

USB Port	DC OUT 5 V 1.5 A
USB Standard	USB 2.0 full speed
Media file format support	MP3 (*.mp3)
USB device file system	FAT12, FAT16, FAT32
AUX IN	Stereo, 3.5 mm jack

■ **Bluetooth® Section**

Version	Bluetooth® Ver2.1+EDR
Class	Class 2
Supported profiles	A2DP, AVRCP
Operating Frequency	2.4 GHz band FH-SS
Operation distance	10 m Line of sight

- Specifications are subject to change without notice.
- Mass and dimensions are approximate.
- Total harmonic distortion is measured by a digital spectrum analyzer.

*1: “BLUETOOTH STANDBY” is “OFF”.
*2: No device is connected to the USB port before turning to standby mode.
*3: MPEG-1 Layer 3, MPEG-2 Layer 3.

A8935029

5 Location of Controls and Components

5.1. Main Unit & Remote Control Key Button Operations

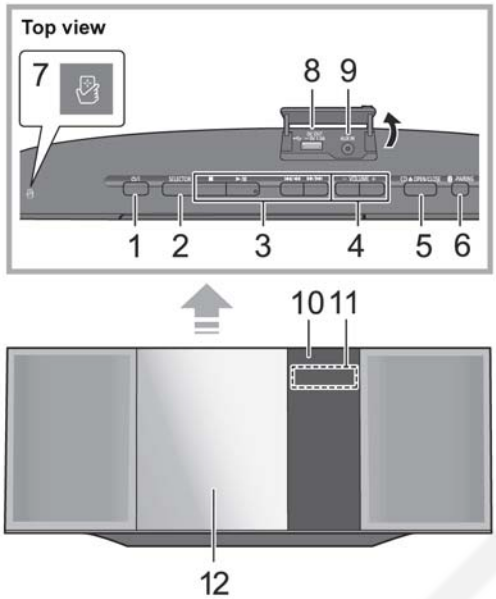

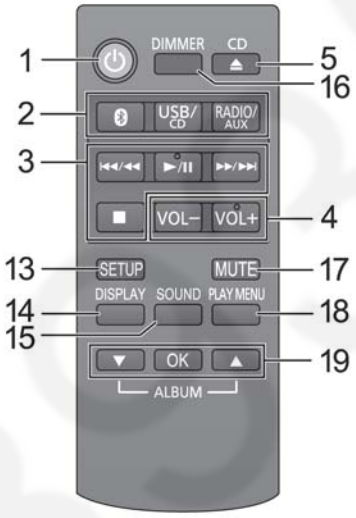

1 **Standby/on switch (⏻/I) (⏻)**
Press to switch the unit from on to standby mode or vice versa.
In standby mode, the unit is still consuming a small amount of power.

2 Select the audio source
On this unit:
"CD" → "BLUETOOTH" → "USB" → ("DAB+")* → "FM" → "AUX" → "CD"
On the remote control:
[ ]: "BLUETOOTH"
[USB/CD]: "CD" ↔ "USB"
[RADIO/AUX]: ("DAB+")* → "FM" → "AUX" → ("DAB+")*

3 Basic playback control buttons

4 Adjust the volume (0 (min) to 50 (max))

5 Open or close the sliding door

6 Bluetooth®-pairing button
- Press to select "BLUETOOTH" as the audio source.
- Press and hold to enter pairing mode (➜ 7) or disconnect a Bluetooth® device (➜ 8).

7 NFC touch area (➜ 7)

8 Port for USB devices / DC OUT terminal (➜ 6)

9 AUX IN jack (➜ 5)

10 Remote control signal sensor
Distance: Within approx. 7 m directly in front
Angle: Approx. 30° left and right

11 Display

12 Sliding door

13 Enter setup menu

14 Change the displayed information

15 Enter sound menu

16 Dim the display panel
Press again to cancel.

17 Mute the sound
Press again to cancel. "MUTE" is also cancelled when the volume is adjusted or the unit is turned off.

18 Enter playback menu

19 Selection/OK

* Only available for SC-HC397

■ Using the remote control

Insert the battery so the terminals (+ and −) match those in the remote control.
Point it at the remote control signal sensor on this unit.
- To avoid interference, please do not put any objects in front of signal sensor.

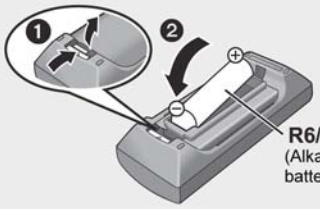

6 Service Mode

This unit is equipped with features of self diagnostic & doctor mode setting for checking the functions & reliability.

6.1. Self Diagnostic Table

Mode name	Item Description	FL display	Key operation
Self Diagnostic Mode	To enter into self diagnostic checking	SERVICE	Step 1 : Select CD mode (Ensure no disc is inserted). Step 2 : Press [■] button on mainset for more than 2 sec and press [▶▶/▶▶I] on mainset for more than 2 sec. • To exit, press the [⏻/I] on the main unit or using the remote control. • Unplug the AC cord.
Error code information	System will perform a check on any unusual/error code from the memory	Example: E -- F61	Step 1 : In self diagnostic mode, Press [STOP] on main unit. It can display up to 5 latest error code • To exit, press the [⏻/I] on the main unit or using the remote control. • Unplug the AC cord.
Delete Error code	To clear the stored in memory (EEPROM IC)	CLEAR	Step 1 : While displaying the error code, press and hold [OK] on remote control for more than 5 second. • To exit, press the [⏻/I] on the main unit or using the remote control. • Unplug the AC cord.
Opecon version	To display model name & version Model Name / Version display HC295 / _6AA≡***_ HC297 DAB / _6AB≡***_ HC395 / _6AC≡***_ HC397 DAB / _6AD≡***_ HC195 / _6AE≡***_	XXX YYY Version display / ROM type	In self diagnostic mode, Opecon version display and firmware version display will be shown one at a time each time [DISPLAY] key press. When press [DISPLAY] key during the last firmware version display (refer to left table), the first version display (opecon version) should display again. In version display mode, when press STOP key should go to error code display mode. • To exit, press the [⏻/I] on the main unit or using the remote control. • Unplug the AC cord.
Cold Start	To activate cold start upon next power up. (Backup data are initialized)	-- -- -- -- -- -- -- -- --	In self diagnostic mode, Press [SETUP] button on the remote control. • To exit, press the [⏻/I] on the main unit or using the remote control. • Unplug the AC cord.

6.2. Self Diagnostic Function Error Code

6.2.1. CD Mechanism Error Code Table

Error Code	Diagnostic Contents	Description of error	Automatic FL Display	Remarks
CD H15	CD Open Abnormal	During normal operation, if “POS_SW_R (OPEN_SW)” is not detected within 4~5 sec, “CD H15” shall be memorized.	CD H15	Press [■] on main unit for next error.
CD H16	CD Closing Abnormal	During closing operation, if “POS_SW_CEN (CLOSE_SW)” is not detected within 4~5 sec, “CD H16” shall be memorized.	CD H16	Press [■] on main unit for next error.

6.2.2. Power Amp Error Code Table

Error Code	Diagnostic Contents	Description of error	Automatic FL Display	Remarks
F61	DAMP output abnormal	PDET2 (DC_DET_AMP)= L (NG). PDET2 (DC_DET_AMP) is checked by reading the input 2x20ms, F61 error code shall be memorized	F61	Press [■] on main unit for next error.
F76	Power supply abnormal	PDET1 (DC_DET_PWR) = L (NG). PDET1 (DC_DET_PWR) is checked by reading the input 2x1ms, F76 error code shall be memorized.	F76	Press [■] on main unit for next error.
SMPS NG	Checking For SMPS P.C.B.	SMPS type and REGION not match. The unit will shut down.	SMPS NG	Press [■] on main unit for next error.

6.2.3. Bluetooth Error Code Table

Error Code	Diagnostic Contents	Description of error	Automatic FL Display	Remarks
F70	Bluetooth Communication	Communication between Bluetooth module and micro-p abnormal	F70	Press [■] on main unit for next error.
F77	Bluetooth Address Error	If there is no valid Bluetooth address stored in the EEPROM IC	F77	Press [■] on main unit for next error.

A89350229

7 Troubleshooting Guide

Main set power ON	Power do not turn on (The FL display "HELLO" do not show up)	Power on by remote control ・OK	Check the connection of FFC connector from FL PCB to Main PCB FFC wire checking Switch button operation checking	・Check the 14P of [FL]-[Main] FFC connector CN900 to CN6007. (For HC395/HC397) ・Check the 12P of [Panel]-[Main] FFC connector CN6801 to CN8001. (For HC195/HC295/HC297) ・Check the 14P of [FL]-[Main] FFC. (For HC395/HC397) ・Power buttons is KEY1 line → 1.5V, if press will momentary drop to 0.198V~0.489V range
		Power on by remote control ・NG	Check the connection of FFC connector from FL PCB to Main PCB Check the B-B connector from SMPS PCB to Main PCB Checking the system +3.3V circuit Checking the AC inlet jack Checking fuse OPEN/blow	Check [FL] CN900(14Pin) → 1.5V, CN900(12Pin) → 3.3V (For HC395/HC397) Check [FL] CN6801(4Pin) → 1.5V, CN8001(2Pin) → 3.3V (For HC195/HC295/HC297) [Switching power module] P1700(5,7Pin) →8.5V to 19V ; P1700 (2Pin) → 0V to 3.3V Check [Main] IC1108(3Pin) → 3.3V (For HC395/HC397) Check [Main] IC1102(3Pin) → 3.3V (For HC195/HC295/HC297) Check [Switching power module]-[ACinlet] wire, copper pattern and solder condition. Check the continuity of [Switching power module] F1 FUSE.
	Power ON but turn off immediately	Error contents F76	Check all for output SPEAKER shorted or presence of DC voltage	Check the IC400 overcurrent, overheating, failure of [DSP] → [DSP] exchange.
		Error contents F61	Check all LDO, DC-DC output supply ICs/devices	Check the each power supply for short or OVP (eg AMP Vcc ,+12V,+5.6, +5.28V,+3.3,+1.8V)
	Power ON but FL display ERROR	Error contents F70 Error contents F77	Check BT signal continuity to SoC/MCU Check BT MAC address if loaded or not	[Main] BT & communication error of the microcomputer/SoC → [Main] board exchange or [BT] module exchange. NO BT MAC address downloaded thus cannot recognize by SoC, failure of IC8001 or IC8004.
	Plug in AC cord FL display "SMPS NG"	Error contents SMPS NG	1) Check resistors region code setting of SMPS P.C.B and Main P.C.B mode code if matching. Refer to Table A :	Replace SMPS P.C.B, It is wrong region
			2) Check +1.55V at pin 3, IC1106 (+1.5V VOLTAGE REGULATOR).	Replace IC1106 if abnormal voltage
			3) Check voltage at pin 40, IC8001 (SoC). Refer to Table B :	Replace IC8001 (1.55V abnormal or L1108)

Table A

MODEL	Region	SMPS ID (R1707) on SMPS P.C.B	Region Setting (R8041) on Main P.C.B	MODEL	Region	SMPS ID (R1707) on SMPS P.C.B	Region Setting (R8041) on Main P.C.B	MODEL	Region	SMPS ID (R1707) on SMPS P.C.B	Region Setting (R8041) on Main P.C.B
HC195	EG/EB	3.9K	15K	HC295	EG	3.9K	15K	HC395	EG	3.9K	15K
					GN	3.9K	33K	HC397	EB/EG	3.9K	3.9K
					GS	3.9K	8.2K				
				HC297	EB	3.9K	3.9K				

Table B

RESISTOR SETTING	VOLTAGE RANGE
0 Ohm	0.000
	0.294
3.9k	0.295
	0.534
8.2k	0.536
	0.775
15k	0.776
	1.015
33k	1.016
	1.254
Open	1.255
	1.500

Fuse OPEN/Blow	After replacement, OPEN/Blow again at AC cord connection	abnormal	Check the continuity of primary side power circuit	Short-open power transformer, electrolytic diode IC · [switching power module]. (D1701,C1706,IC1700,T1700)
	After replacement, OPEN/Blow again at Power ON	The secondary side of main power supply abnormal	Check the continuity of secondary side power circuit	Short-open power-electrolytic IC diode [switching power module] (D1700,C1703,IC1701)
FL display	FL display no show/full/abnormal segment	NO supply to FL	check 12V LDO supply and FL5V supply	[FL] FL6801(31, 37Pin)
		FL pins shorted	Check FL pins for solder shorted	[FL] FL6801 (all pins if shorted base on schematic) [FL] FL6801 pin (9, 12,15Pin) control signal line if have
Door Failure	FL display Door ERROR	Error contents: Illegal OPEN	check motor switches	[Motor PCB] CN931 (1, 4Pin) (For HC395/HC397)，CN905 (3, 4Pin) (For HC195/HC295/HC297)
		Error contents: cannot OPEN/CLOSE	Check motor IC	[Main] IC5001 supply pins and solderability
Audio confirmation	No audio output（CD play)			Check the [DSP]IC400 (23Pin) → 3.3V, check IC400 (25,30,31,36Pin) → PWM waveform have or not
	No audio output（Tuner play: FM）			Check IC52 power supply and solderability
	No audio output（AUX output: AUX)			Check IC52 power supply and solderability
	No audio output（iPhone: USB)			Check (MAIN) IC6001 for supply and solderability, connection to IC8001, USB 5V supply check (For HC195/HC295/HC297)
	No sound from front speaker			Check IC400 supply voltage pin 26 & 35 → 19.5V(For HC195/HC295/HC297), speaker connector connected CN400 and CN401

For SC-HC397, SC-HC395, SC-HC297, SC-HC295 only

Audio confirmation	**Sound skip** from speakers (Bluetooth input)		Check the radio wave interference of other wireless equipment (cordless phone, microwave oven, WiFi, other BT devices).	Place wireless equipment more than 2 meters away from main unit
	No sound from speakers (Bluetooth input)	FL Display quickly then becomes BLUETOOTH READY(PAIRING: OK)	Check and try to re-connect to speaker again via NFC or selecting from external source device the HCXXX again	Change Main PCB if symptoms persist
	Bluetooth (BT) Module	FL Display becomes PAIRING FAIL (PAIRING: NG)	Check if can pair with other devices Factory Reset product	Change Main PCB if symptoms persist
		Unable to view HCXXX in list of BT devices in external BT device		If all above are OK, replace BT module

A8gs5029

8 Disassembly and Assembly Instructions

Caution Note:

- **This section describes the disassembly and/or assembly procedures for all major printed circuit boards & main components for the unit. (You may refer to the section of “Main components and P.C.B Locations” as described in this service manual)**
- **Before carrying out the disassembly process, please ensure all the safety precautions & procedures are followed.**
- **During the disassembly and/or assembly process, please handle with care as there may be chassis components with sharp edges.**
- **Avoid touching heatsinks due to its high temperature after prolong use.**
- **Be sure to use proper service tools , equipments or jigs during repair.**
- **Select items from the following indexes when disassembly or replacement are required.**

- **Disassembly of Base Stand Unit**
- **Disassembly of Front Ornament Unit (L) & (R)**
- **Disassembly of Door Unit**
- **Disassembly of Door Base**
- **Disassembly of Front Panel Block**
- **Disassembly of Bridge P.C.B.**
- **Disassembly of Motor P.C.B.**
- **Disassembly of Gear Block & Arm Spring (Top)**
- **Disassembly of Arm Spring, Gear Assembly & Arm Assembly**
- **Replacement of Gear Base Assembly**
- **Replacement of Arm Assembly**
- **Disassembly of Cam Rail Top & Door Slider Top**
- **Disassembly of Cam Rail Bottom & Door Slider Bottom**
- **Disassembly of NFC P.C.B.**
- **Disassembly of SMPS Unit**
- **Disassembly of SMPS P.C.B.**
- **Disassembly of FL P.C.B. & Button Ornament Unit**
- **Disassembly of Button P.C.B.**
- **Disassembly of CD Mechanism**
- **Disassembly of CD Interface P.C.B.**
- **Disassembly of DAB Module and DAB Adapter P.C.B. (For HC397)**
- **Disassembly of Main P.C.B.**
- **Disassembly of Front Speaker (SP1)**
- **Disassembly of Front Speaker (SP2)**
- **Disassembly of Passive Radiator Unit (SP3)**
- **Disassembly of Passive Radiator Unit (SP4)**
- **Disassembly of Jack Lid**

8.1. Service Fixture & Tools

Prepare service tools before process service position.

Ref. No.	Service Tools		Remarks
SFT1	Main P.C.B. (P5003) - CD Interface P.C.B. (CN7002)	REE1978 (24P FFC)	
SFT2	Main P.C.B. (CN1100) - SMPS P.C.B. (P1700)	REX1538 (7P Wire)	

8.2. Disassembly flow chart

The following chart is the procedure for disassembling the casing and inside parts for internal inspection when carrying out the servicing.

To assemble the unit, reverse the steps shown in the chart below.

For HC395

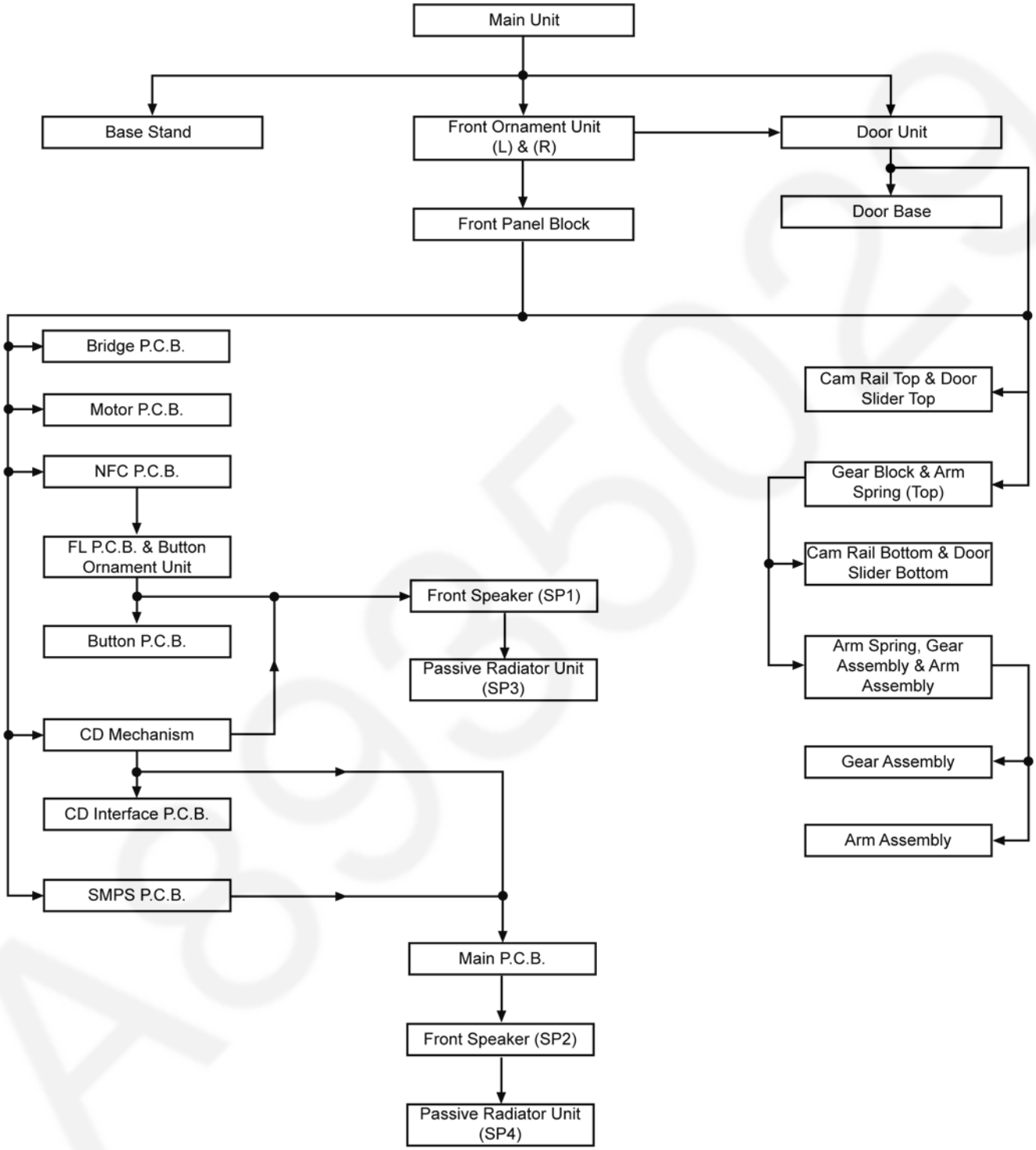

For HC397

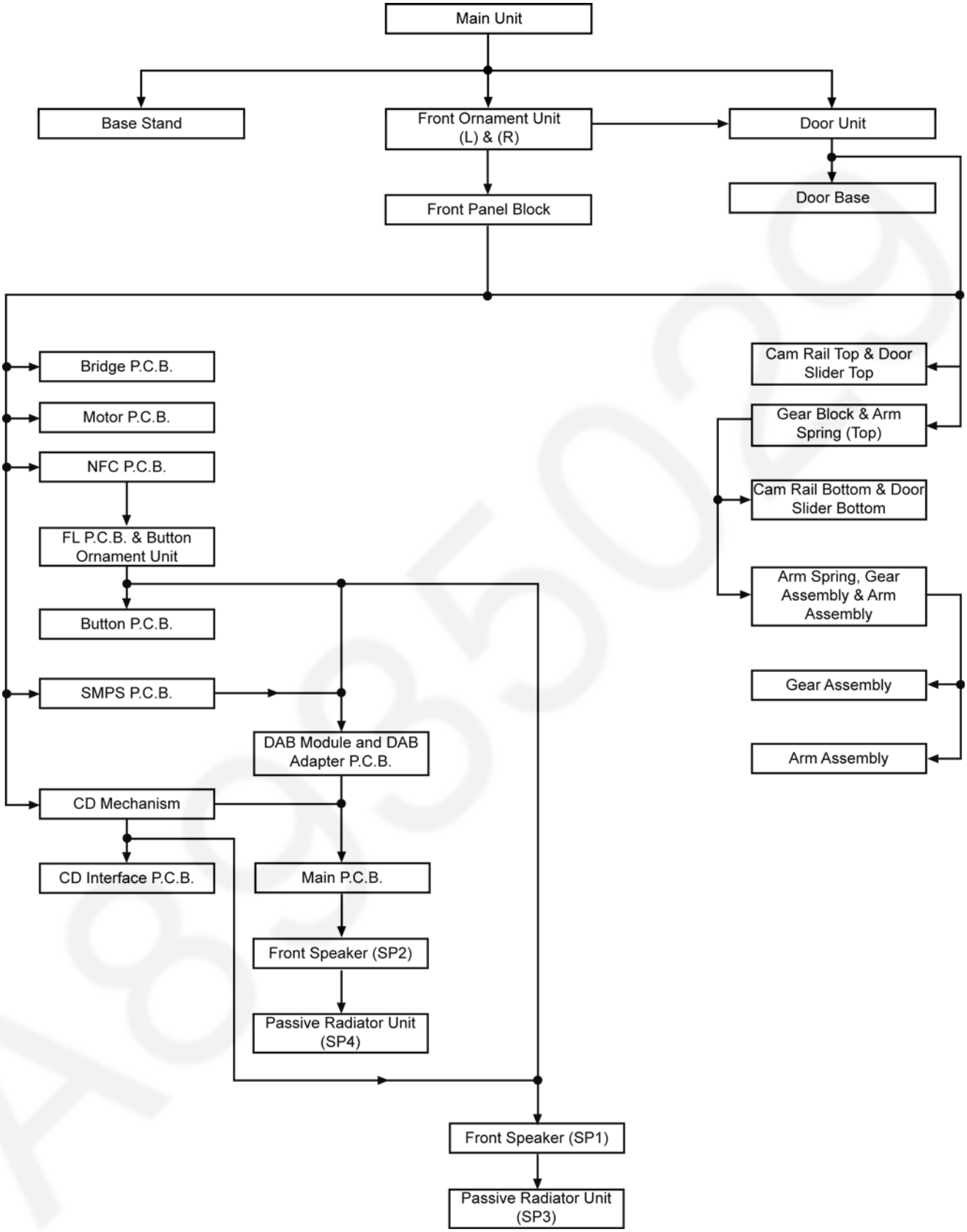
Main Unit
Base Stand
Front Ornament Unit (L) & (R)
Door Unit
Door Base
Front Panel Block
Bridge P.C.B.
Motor P.C.B.
NFC P.C.B.
FL P.C.B. & Button Ornament Unit
Button P.C.B.
SMPS P.C.B.
DAB Module and DAB Adapter P.C.B.
CD Mechanism
CD Interface P.C.B.
Main P.C.B.
Front Speaker (SP2)
Passive Radiator Unit (SP4)
Front Speaker (SP1)
Passive Radiator Unit (SP3)
Cam Rail Top & Door Slider Top
Gear Block & Arm Spring (Top)
Cam Rail Bottom & Door Slider Bottom
Arm Spring, Gear Assembly & Arm Assembly
Gear Assembly
Arm Assembly

8.3. Types of Screws

CAUTION NOTE:
Please use original screw and at correct locations.

Below shown is part no. of different screw types used:

- ⓐ : RHD26046
- ⓑ : VHD1224-1A
- ⓒ : RHD14136
- ⓓ : RHD26043-1
- ⓔ : XTB3+10JFJK
- ⓕ : RHD30092-1
- ⓖ : XTN2+6GFJ
- ⓗ : RHD26066

8.4. Main Parts Location Diagram

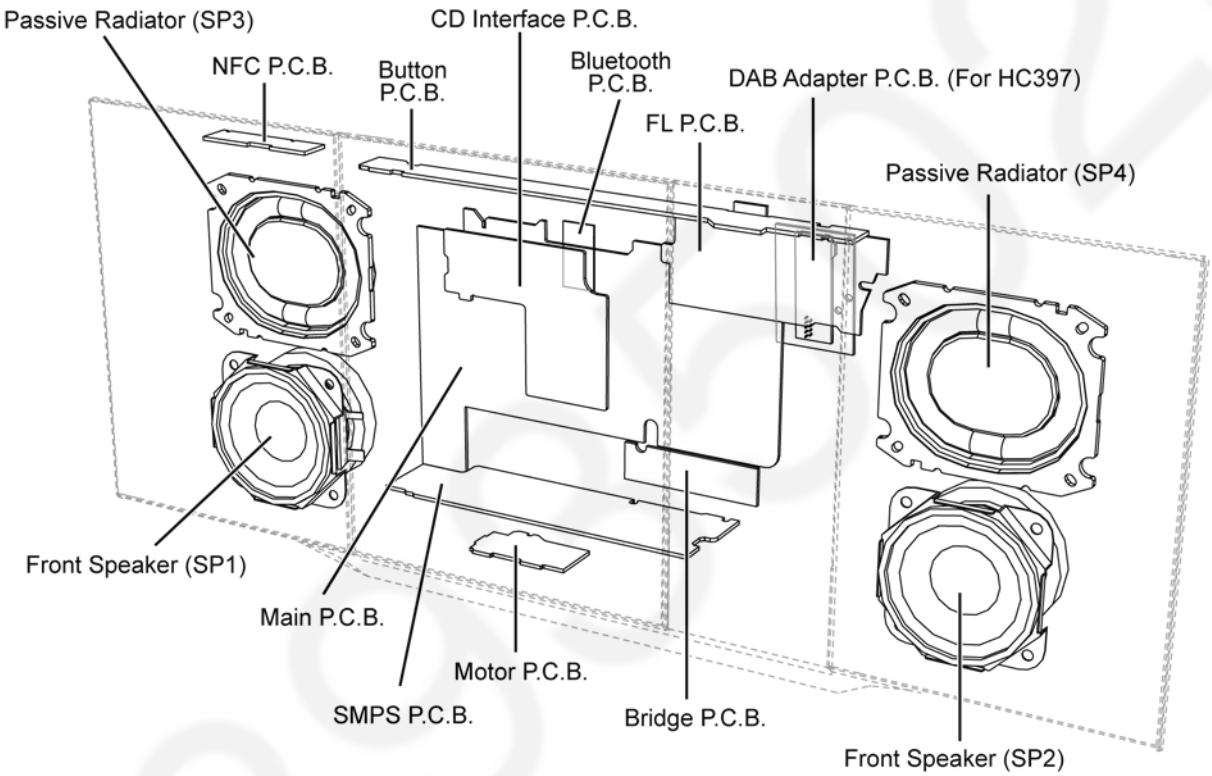

8.5. Disassembly of Base Stand Unit

Step 1 : Remove screw.
Step 2 : Remove Base Stand Unit.

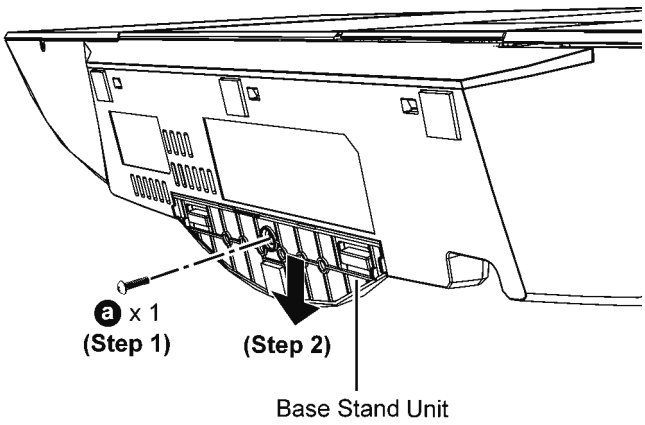

8.6. Disassembly of Front Ornament Unit (L) & (R)

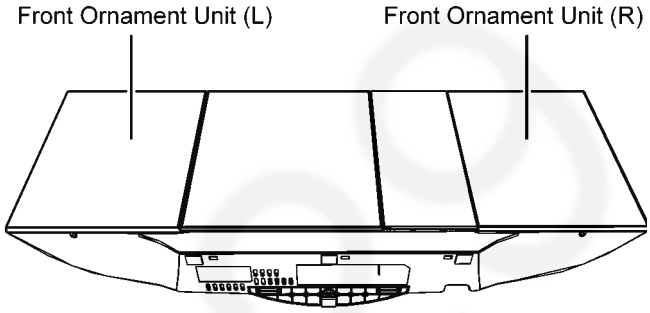

Note : The disassembling procedure for Front Ornament Unit (L) will be described here only.
For Front Ornament Unit (R) please refer to the same procedure described here.

Step 1 : Remove screw.
Step 2 : Push Front Ornament Unit (L) upwards.
Step 3 : Remove Front Ornament Unit (L).

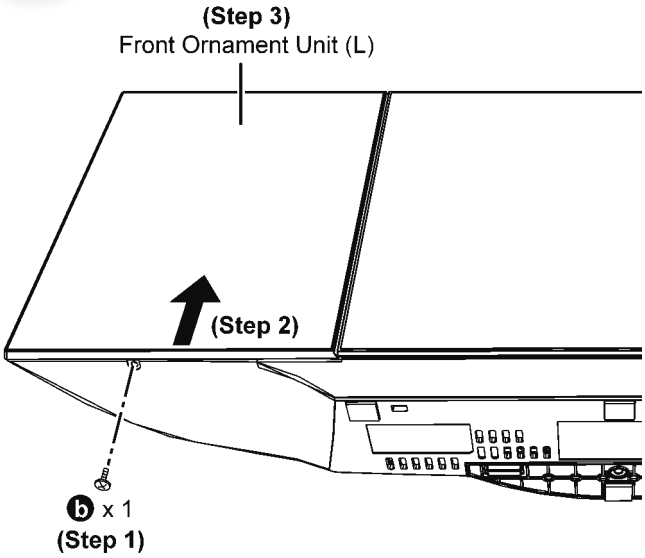

A8935029

8.7. Disassembly of Door Unit

- Refer to “Disassembly of Front Ornament Unit (L)”

Step 1 : Lift up Door Unit.
Step 2 : Slide Door Unit to open it.

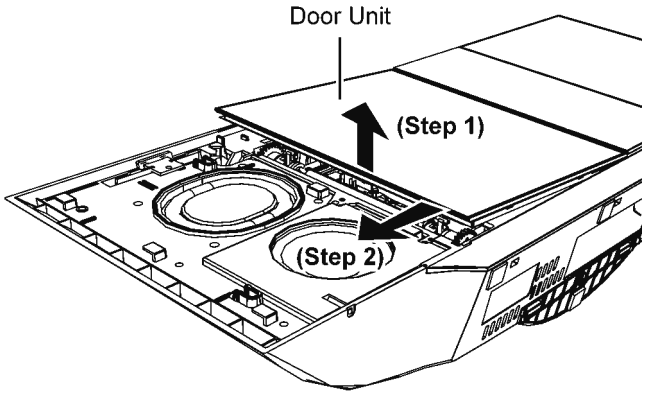

Step 3 : Slightly lift up Door Unit as arrow shown to release catches.
Step 4 : Push Door Unit upwards.
Step 5 : Remove Door Unit.

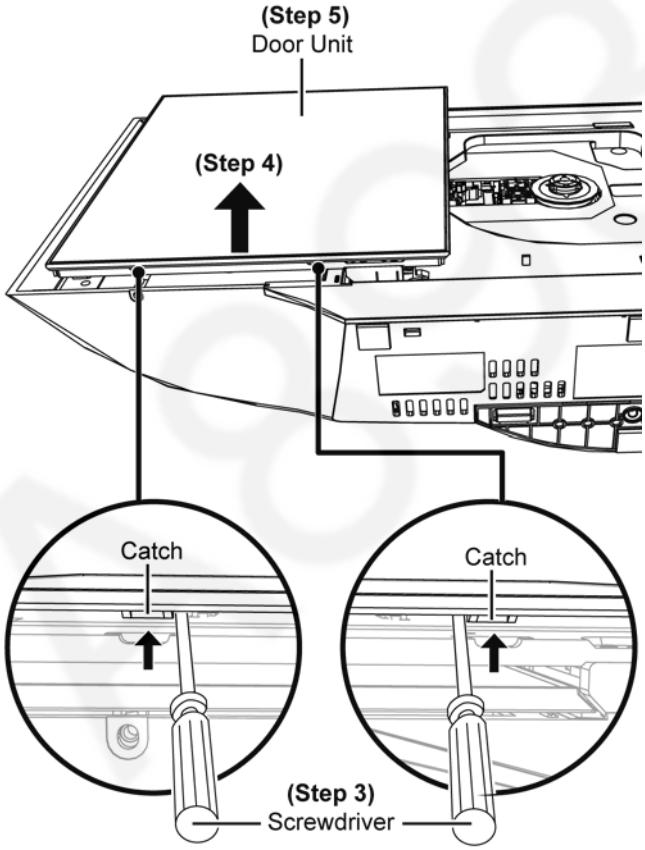

8.8. Disassembly of Door Base

- Refer to “Disassembly of Front Ornament Unit (L)”
- Refer to “Disassembly of Door Unit”

Step 1 : Slide Door Base to close it.
Step 2 : Remove 4 screws.
Step 3 : Push up to release Door Holder as arrow shown.
Caution : During assembly, ensure Door Holder is lock as shown.
Step 4 : Remove Door Base.

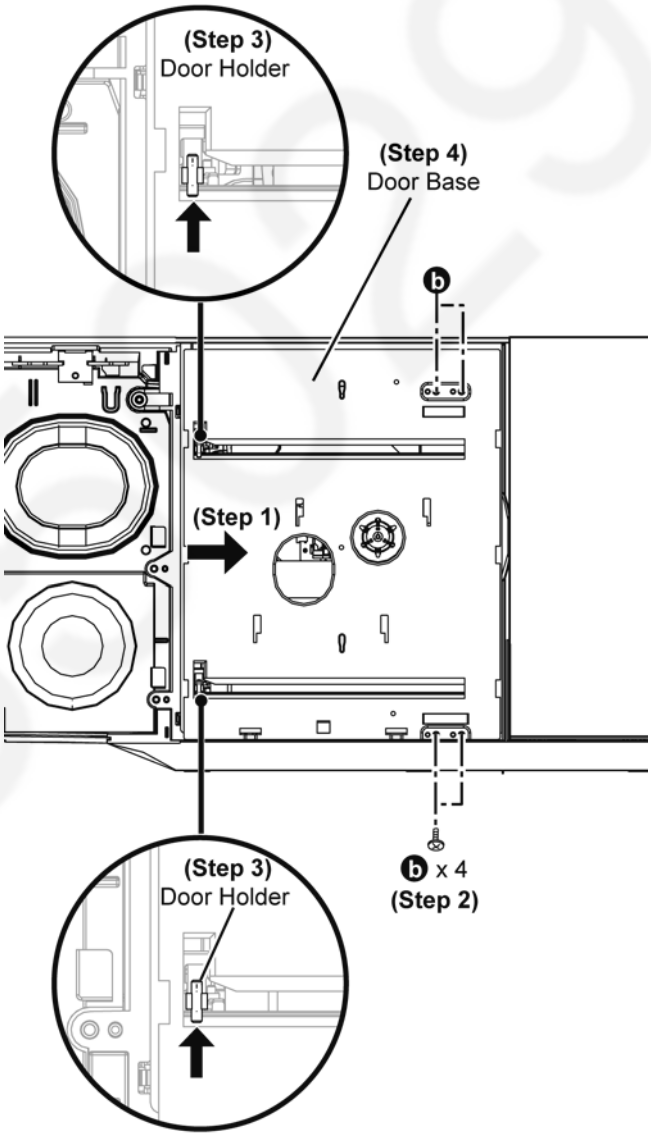

8.9. Disassembly of Front Panel Block

• Refer to “Disassembly of Front Ornament Unit (L) & (R)”

Step 1 : Remove 6 screws.

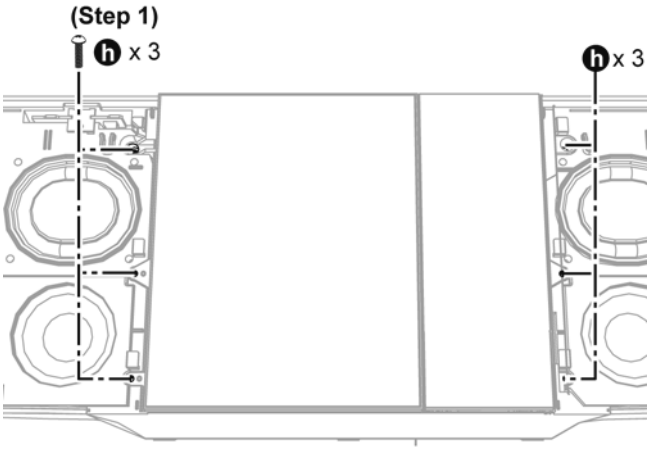

Step 2 : Lift up Door Unit.
Step 3 : Slide Door Unit to open it.

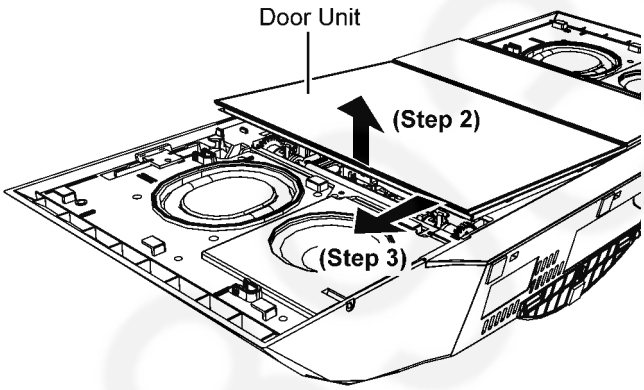

Step 4 : Remove 2 screws.
Step 5 : Slide Door Unit to close it.
Step 6 : Release catches on Front Panel Block.
Step 7 : Slightly lift up Front Panel Block.

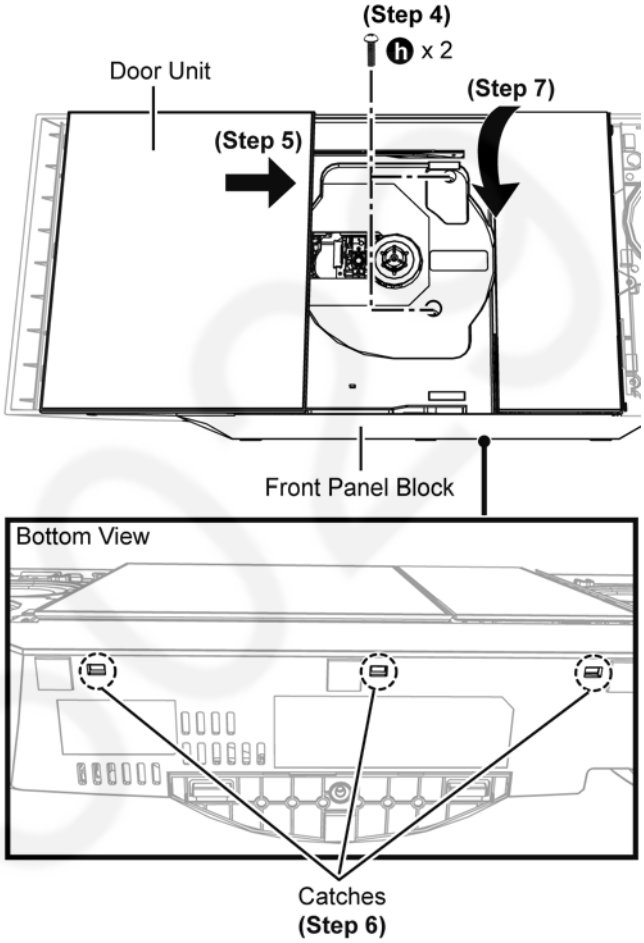

Step 8 : Detach 14P FFC at connector (CN941) on Bridge P.C.B..
Step 9 : Remove Front Panel Block.

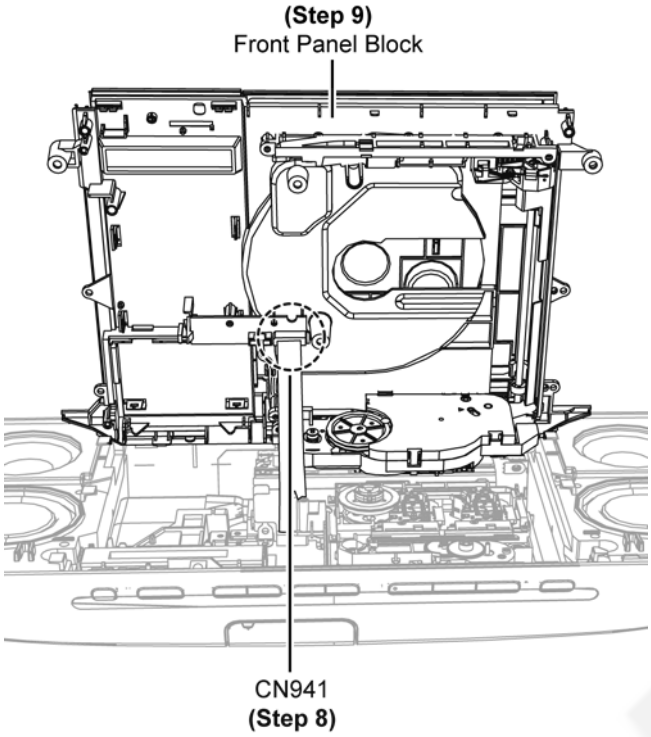

8.10. Disassembly of Bridge P.C.B.

- Refer to “Disassembly of Front Ornament Unit (L) & (R)”
- Refer to “Disassembly of Front Panel Block”

Step 1 : Remove screw.
Step 2 : Release 5P wire from slot.
Step 3 : Detach 5P wire at connector (P942) on Bridge P.C.B..

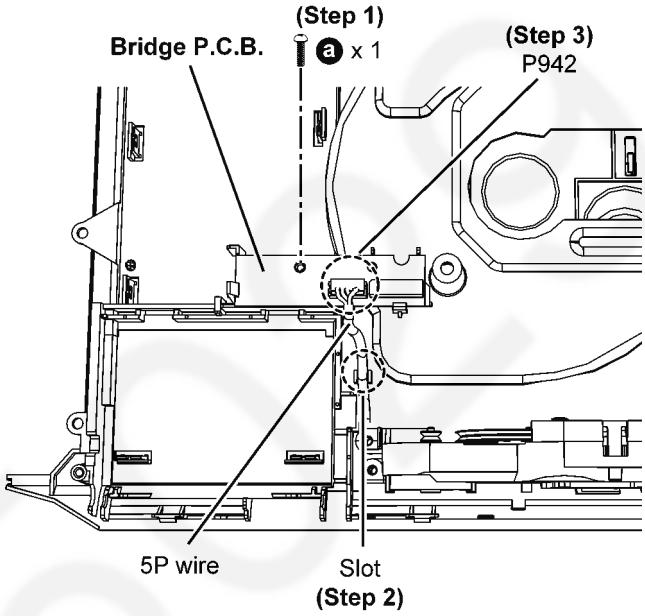

Step 4 : Release catches.
Step 5 : Remove Bridge P.C.B..

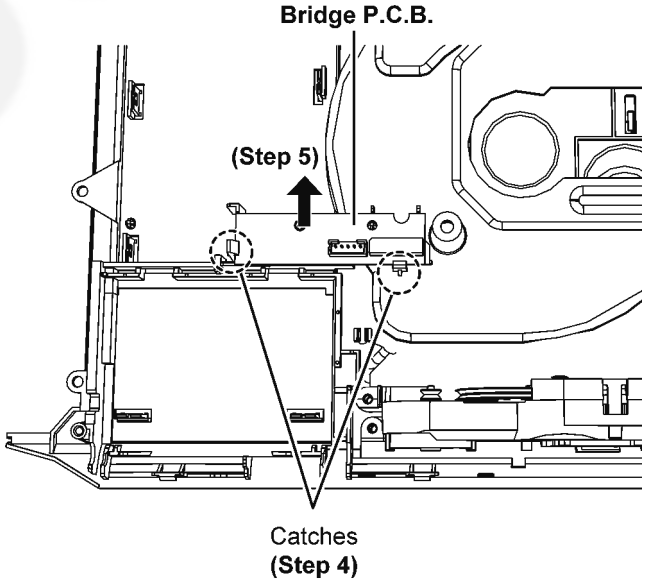

A8935DE

8.11. Disassembly of Motor P.C.B.

- Refer to “Disassembly of Front Ornament Unit (L) & (R)”
- Refer to “Disassembly of Front Panel Block”

Step 1 : Release 5P wire from slots.
Step 2 : Remove screw.
Step 3 : Remove screw.
Step 4 : Lift up Motor P.C.B..
Caution : During assembly, avoid using electric screw-driver to prevent overrun for [ⓔ] type screw.

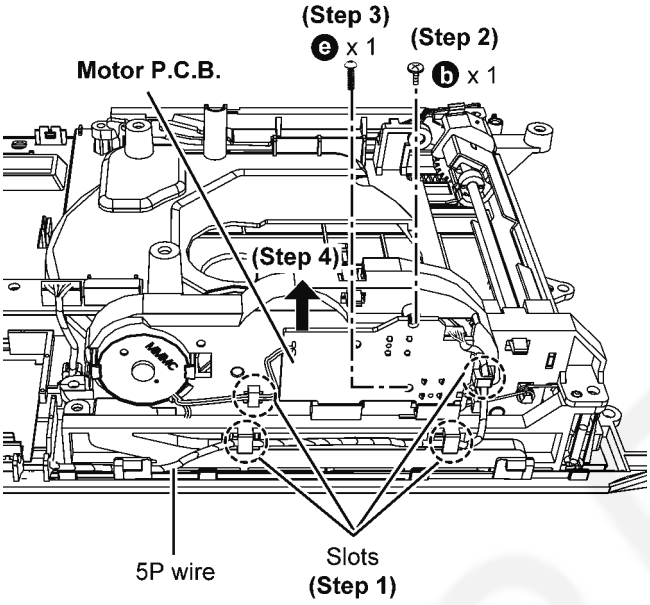

Step 5 : Detach 5P wire at connector (CN931) on Motor P.C.B..
Step 6 : Desolder pins on solder side of Motor P.C.B..
Step 7 : Remove Motor P.C.B..

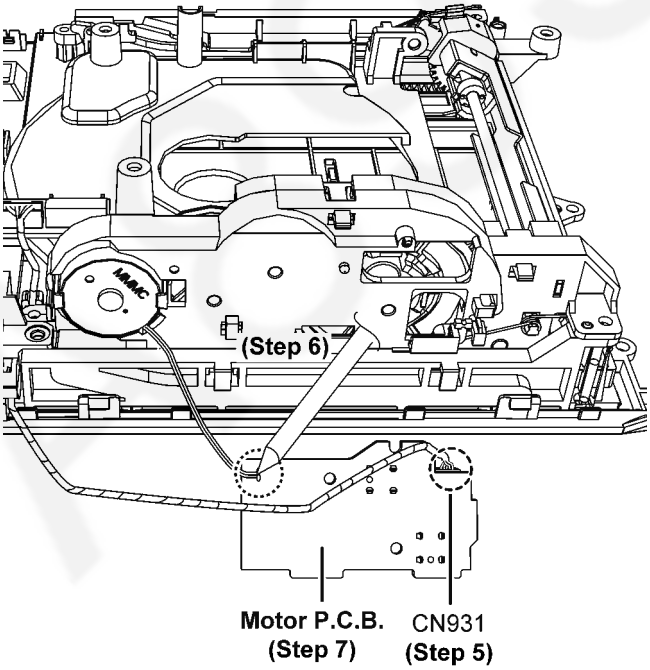

8.12. Disassembly of Gear Block & Arm Spring (Top)

- Refer to “Disassembly of Front Ornament Unit (L) & (R)”
- Refer to “Disassembly of Door Unit”
- Refer to “Disassembly of Front Panel Block”

Step 1 : Push up to release Door Holder as arrow shown.
Caution : During assembly, ensure Door Holder is lock as shown.

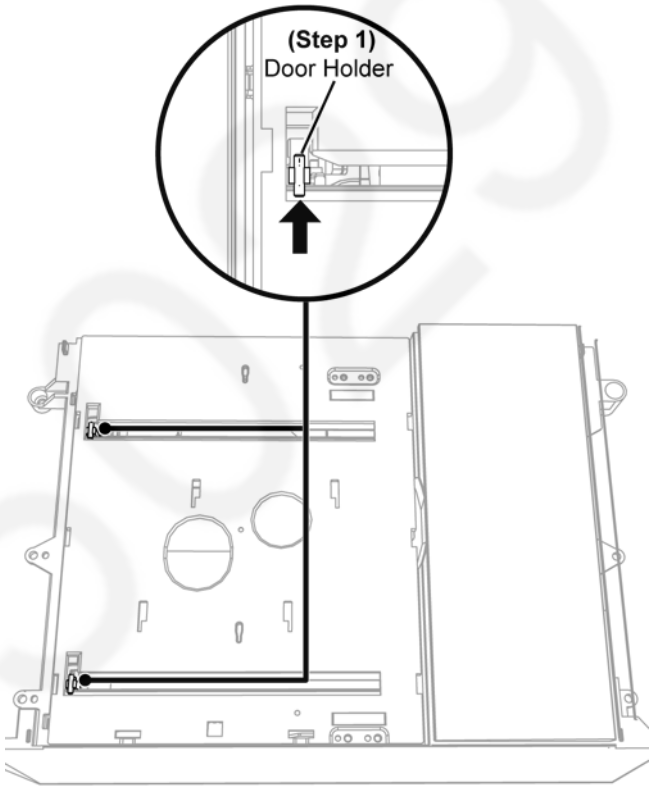

Step 2 : Release 5P wire from slots.
Step 3 : Detach 5P wire at connector (P942) on Bridge P.C.B..

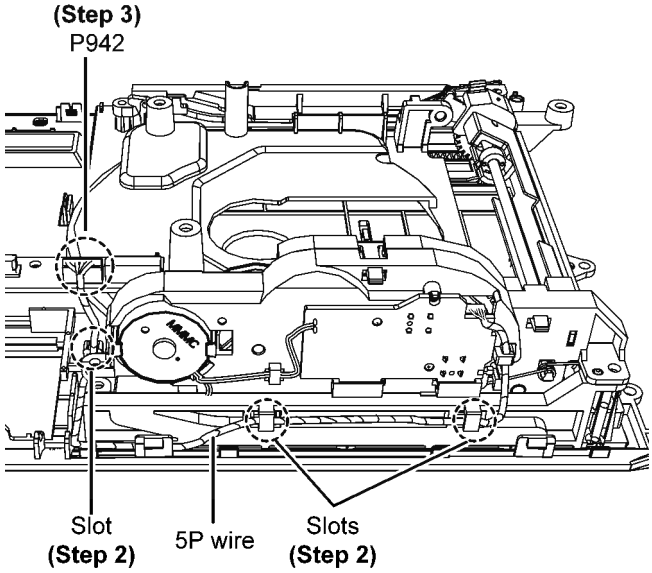

Step 4 : Release Arm Spring (Top) from ribs.
Step 5 : Remove Arm Spring (Top).

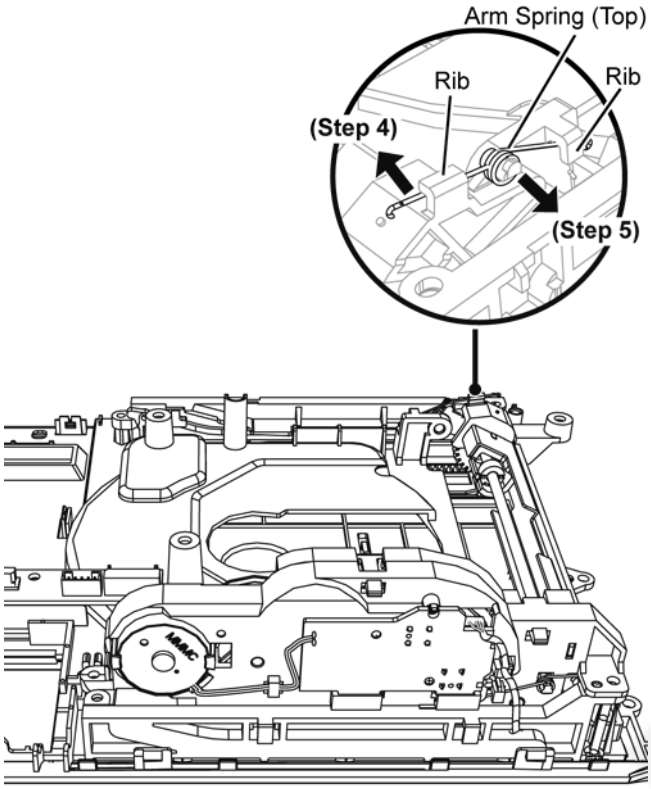

Step 6 : Remove 2 screws.
Step 7 : Release guide from slot.
Step 8 : Remove Gear Block.

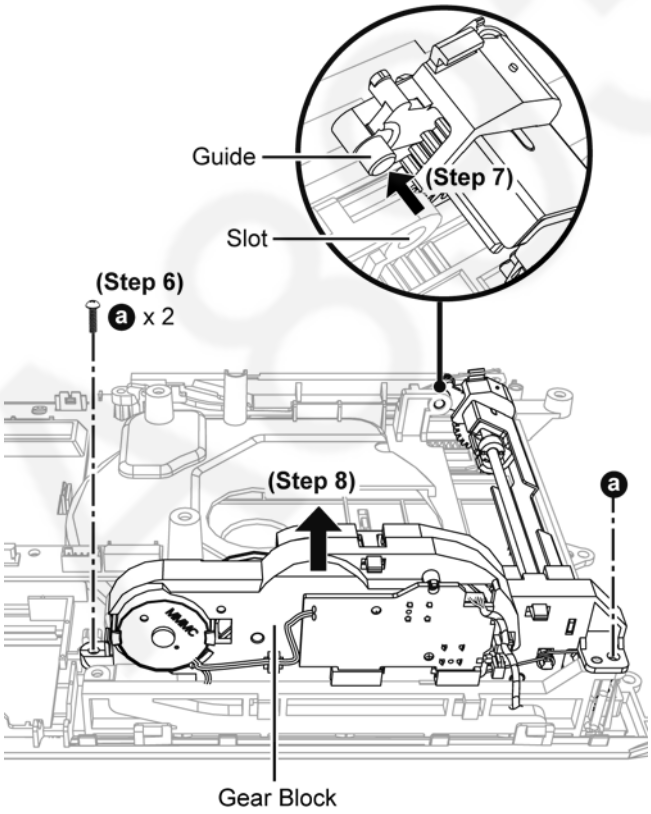

8.13. Disassembly of Arm Spring, Gear Assembly & Arm Assembly

- Refer to “Disassembly of Front Ornament Unit (L) & (R)”
- Refer to “Disassembly of Door Unit”
- Refer to “Disassembly of Front Panel Block”
- Refer to “Disassembly of Gear Block & Arm Spring (Top)”

Step 1 : Release Arm Spring from ribs.
Step 2 : Remove Arm Spring.

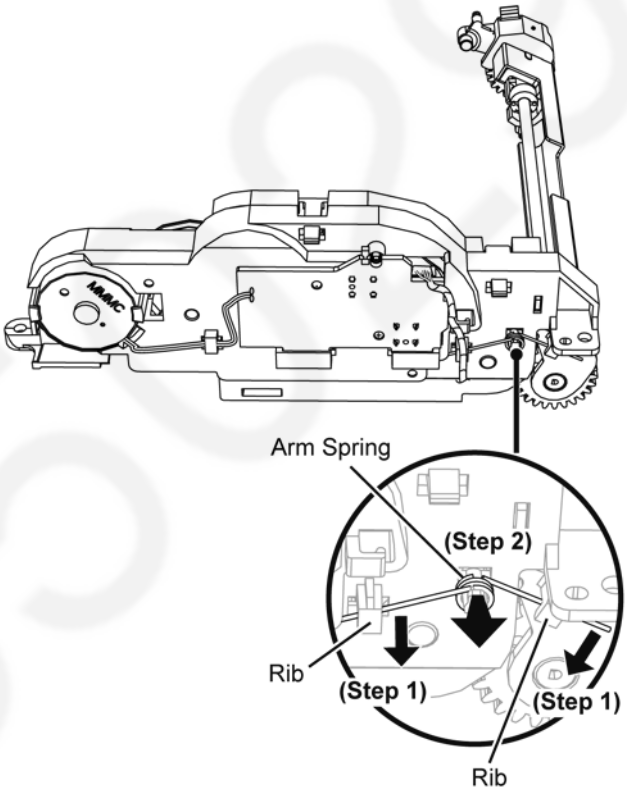

Step 3 : Remove screw.
Step 4 : Release catches.
Step 5 : Remove Gear Cover.

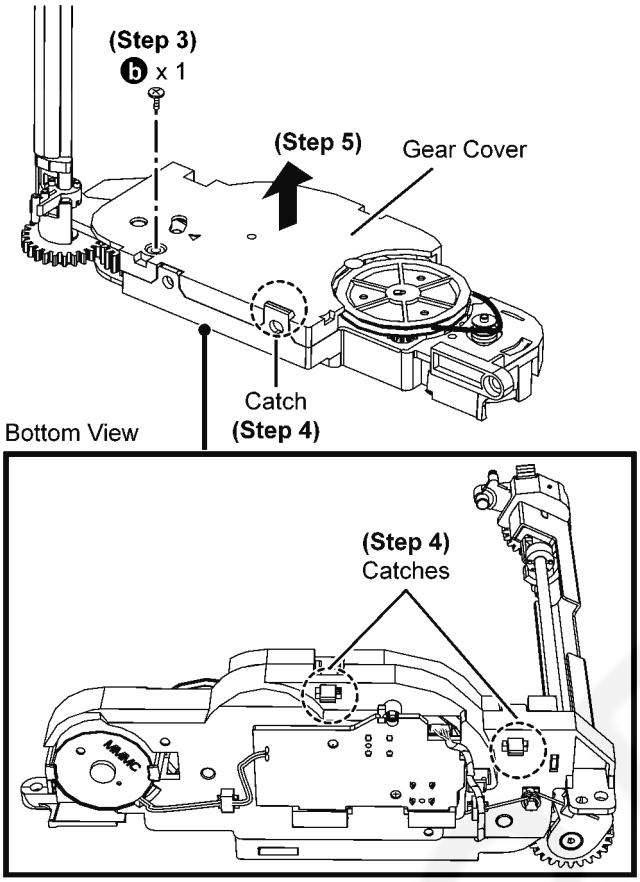

Step 6 : Remove Arm Assembly & Gear Assembly.

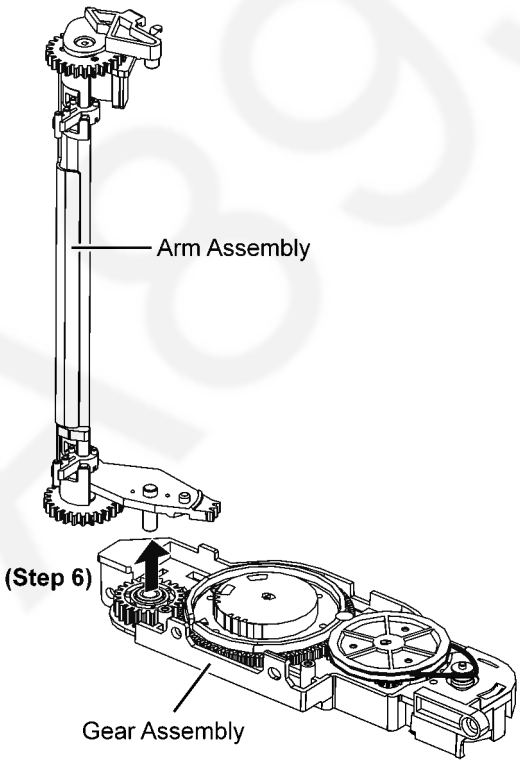

Caution : During assembling, position & align Gear B with the indicated arrow on Gear Assembly.

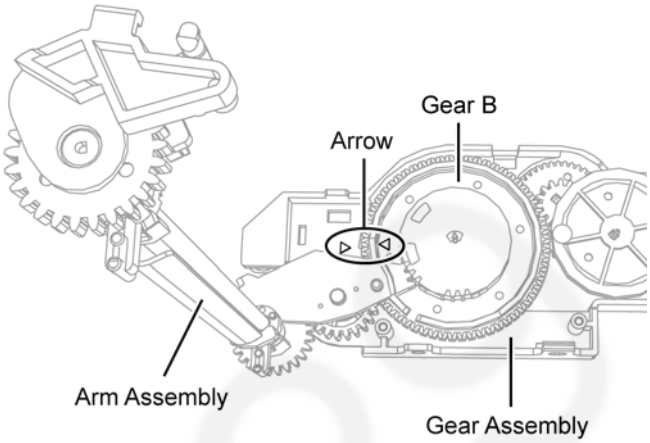

8.14. Replacement of Gear Assembly

- Refer to “Disassembly of Front Ornament Unit (L) & (R)”
- Refer to “Disassembly of Door Unit”
- Refer to “Disassembly of Front Panel Block”
- Refer to “Disassembly of Gear Block & Arm Spring (Top)”
- Refer to “Disassembly of Arm Spring, Gear Assembly & Arm Assembly”

8.14.1. Disassembly of Belt, Pulley Gear, Gear B & Gear A

Step 1 : Remove Belt.
Step 2 : Remove Pulley Gear.
Step 3 : Remove Gear B.
Step 4 : Remove Gear A.
Caution : During assembling, turn Gear A, Gear B and Pulley Gear a few time to match gear teeth with other gear before push to fix it.

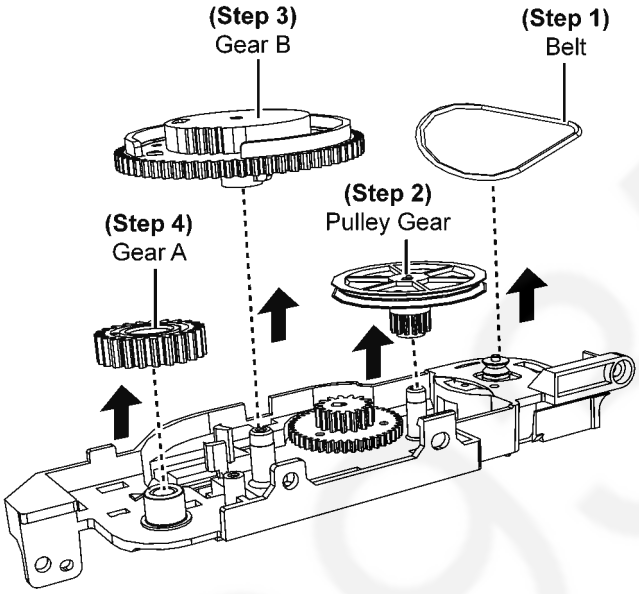

8.14.2. Disassembly of Gear C

- Refer to “Disassembly of Belt, Pulley Gear, Gear B & Gear A”

Step 1 : Remove Gear C.

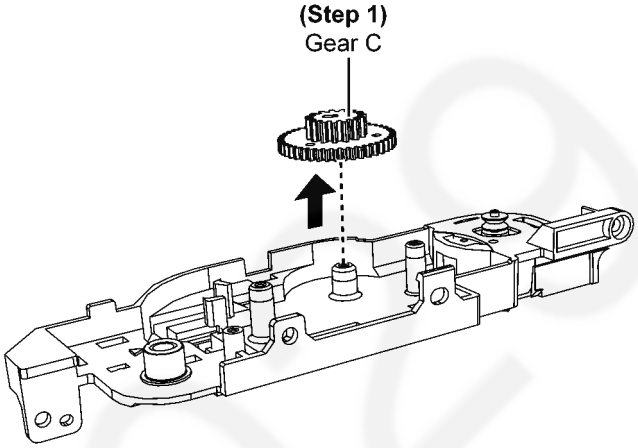

A8935029

8.14.3. Disassembly of Motor Assembly

- Refer to “Refer to (Step 1) of item 8.14.1.”

Step 1 : Desolder pins on solder side of Motor P.C.B..
Step 2 : Release 2P wire from slot.

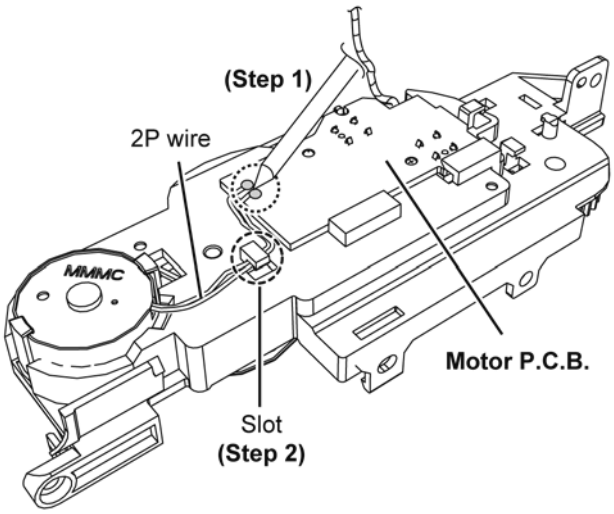

Step 3 : Release catches.
Step 4 : Remove Motor Assembly.
Caution : During assembling, position & align Motor wire with the guide on Gear Base, A “click” sound is heard when Motor is fully catched.

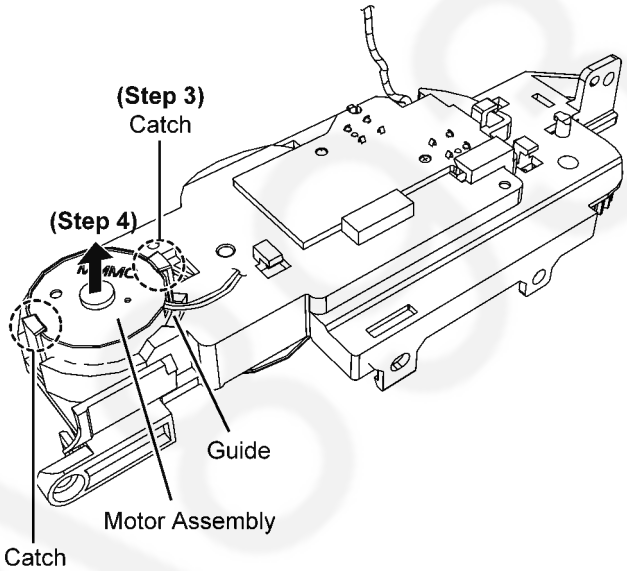

8.15. Replacement of Arm Assembly

- Refer to “Disassembly of Front Ornament Unit (L) & (R)”
- Refer to “Disassembly of Door Unit”
- Refer to “Disassembly of Front Panel Block”
- Refer to “Disassembly of Gear Block & Arm Spring (Top)”
- Refer to “Disassembly of Arm Spring, Gear Assembly & Arm Assembly”

8.15.1. Disassembly of Drive Gear, Door Holder & Gear Shaft

Step 1 : Release and push Door Holder to the middle of Gear Shaft.
Caution : During assembling, ensure Door Holder is in lock position as shown.
Step 2 : Push Door Arm Bottom and Door Arm Top to release guide and remove Gear Shaft Assembly.

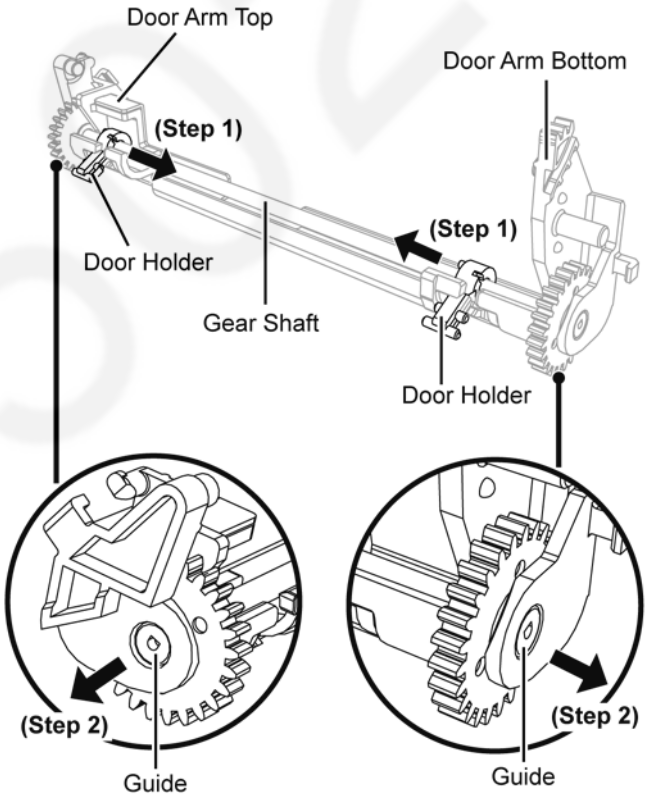

Step 3 : Remove Drive Gear, Door Holder & Gear Shaft.

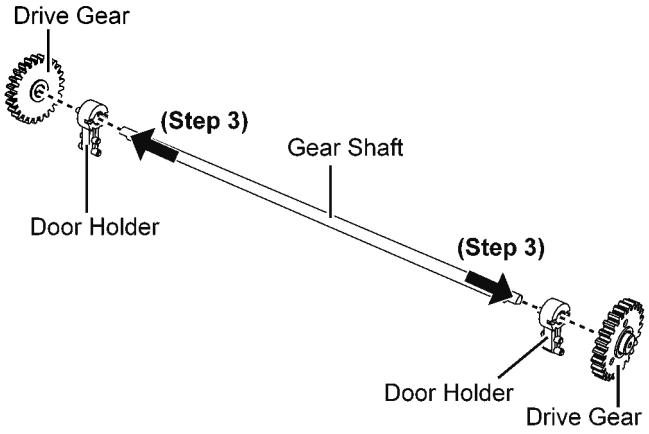

Caution : During assembling, ensure Door Holder Rib is parallel into the Gear Shaft.

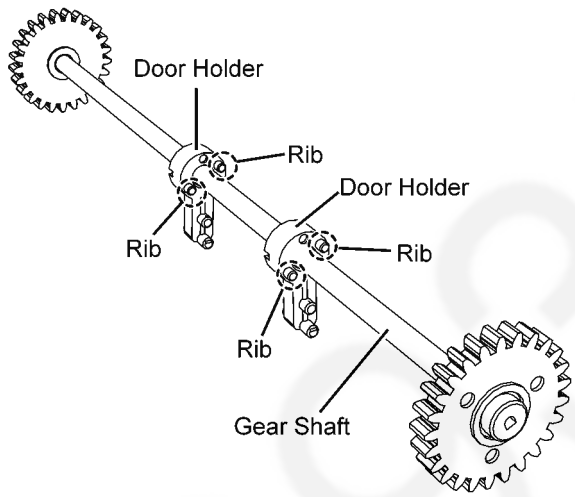

8.15.2. Disassembly of Arm Bracket Metal, Door Arm Top & Door Arm Bottom

- Refer to “Disassembly of Drive Gear, Door Holder & Gear Shaft”

Step 1 : Remove 2 screws.

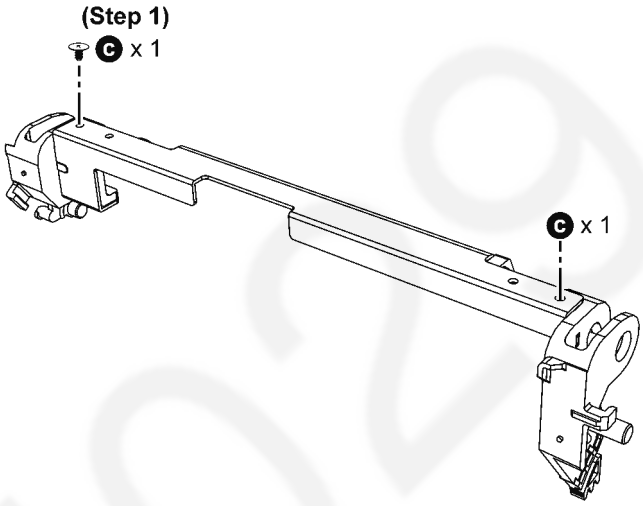

Step 2 : Remove Arm Bracket Metal, Door Arm Top & Door Arm Bottom.

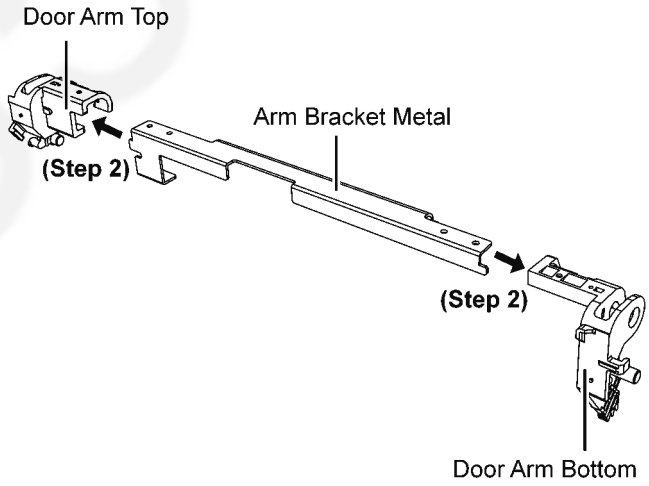

A8985029

8.16. Disassembly of Cam Rail Top & Door Slider Top

- Refer to “Disassembly of Front Ornament Unit (L) & (R)”
- Refer to “Disassembly of Door Unit”
- Refer to “Disassembly of Front Panel Block”

Step 1 : Remove 2 screws.

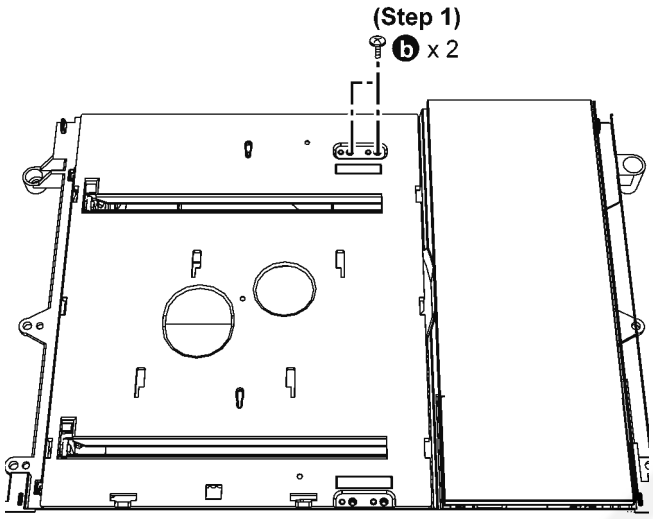

Step 2 : Remove 2 screws.

Step 3 : Slightly lift up to remove Cam Rail Top.

Caution : During assembling, ensure Door Slider Bottom is properly inserted into Cam Rail Bottom.

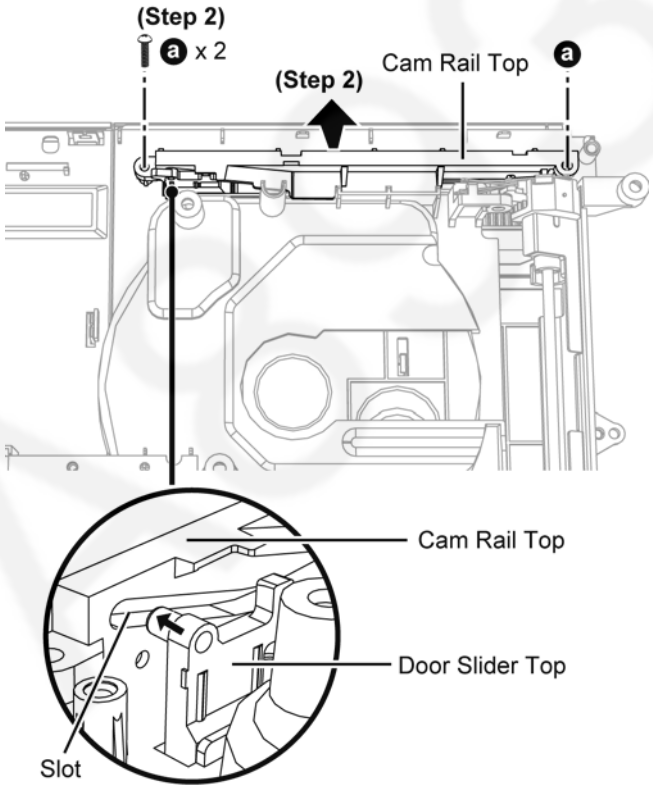

Step 4 : Remove Door Slider Top.

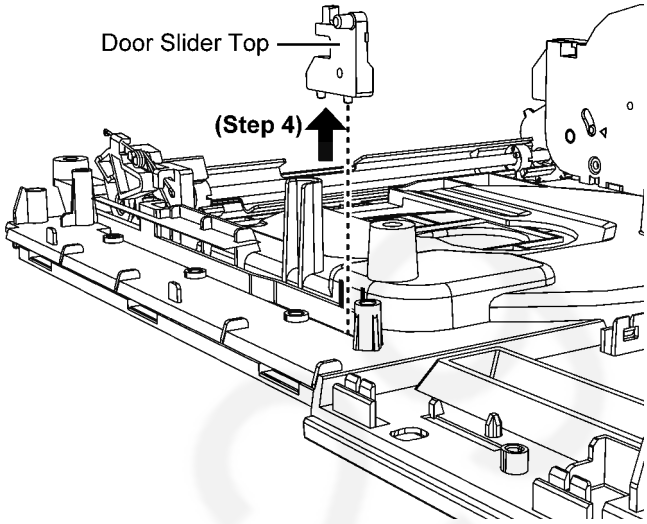

8.17. Disassembly of Cam Rail Bottom & Door Slider Bottom

- Refer to “Disassembly of Front Ornament Unit (L) & (R)”
- Refer to “Disassembly of Door Unit”
- Refer to “Disassembly of Front Panel Block”
- Refer to “Disassembly of Gear Block & Arm Spring (Top)”

Step 1 : Remove 2 screws.

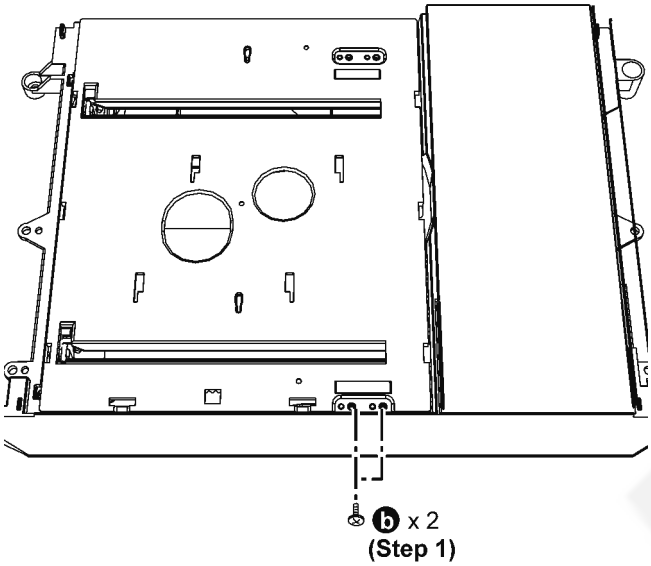

Step 2 : Slightly lift up to remove Cam Rail Bottom.

Caution : During assembling, ensure Door Slider Bottom is properly inserted into slot of Cam Rail Bottom.

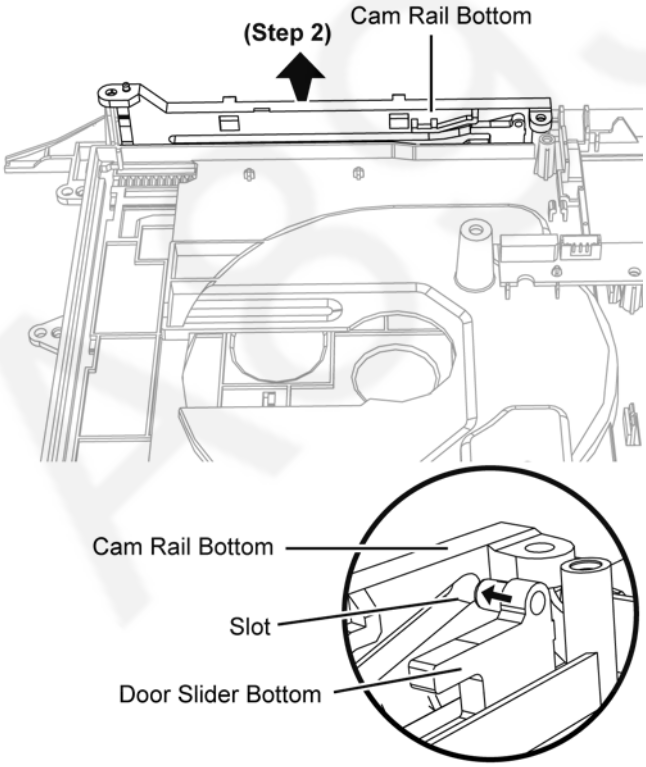

Step 3 : Remove Door Slider Bottom.

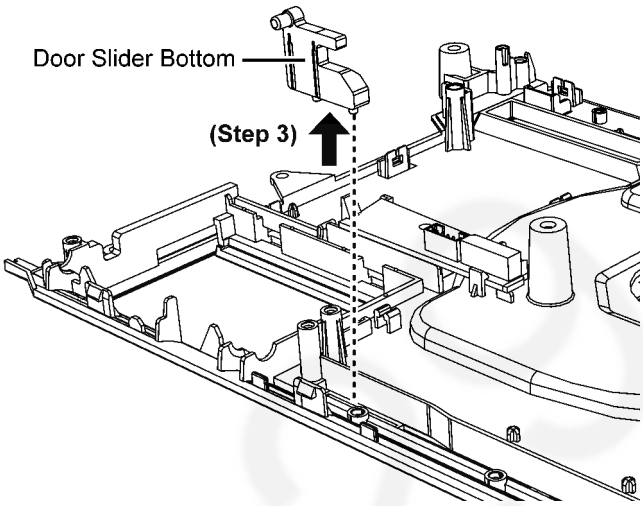

8.18. Disassembly of NFC P.C.B.

- Refer to “Disassembly of Front Ornament Unit (L) & (R)”
- Refer to “Disassembly of Front Panel Block”

Caution:
In case either NFC P.C.B. or EEPROM IC (IC8004) on Main P.C.B. should break down, they need to be replaced at the same time as a pair.
For the details, please refer to "Service Navigation"

Step 1 : Remove screw.
Step 2 : Slightly lift up to remove Support P.C.B..

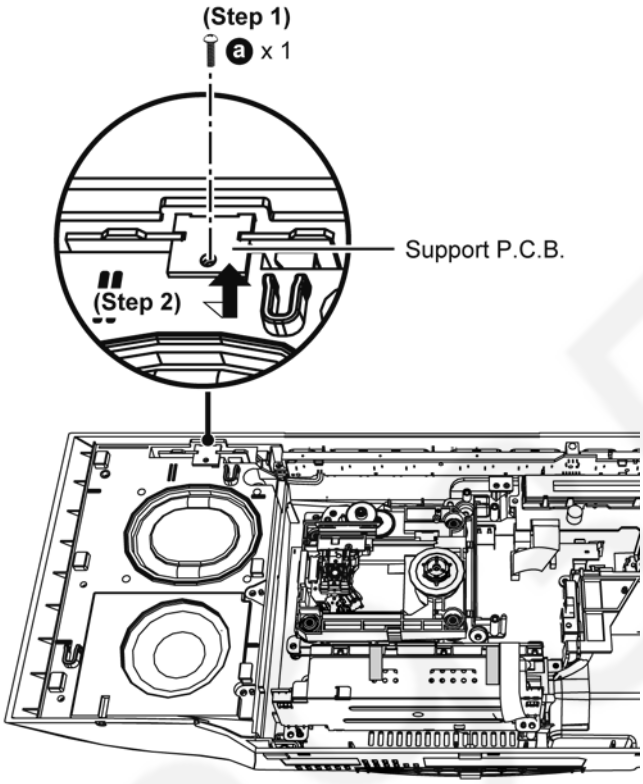

Step 3 : Lift up NFC P.C.B..
Step 4 : Detach 2P wire at connector (CN7001) on NFC P.C.B..
Step 5 : Remove NFC P.C.B..

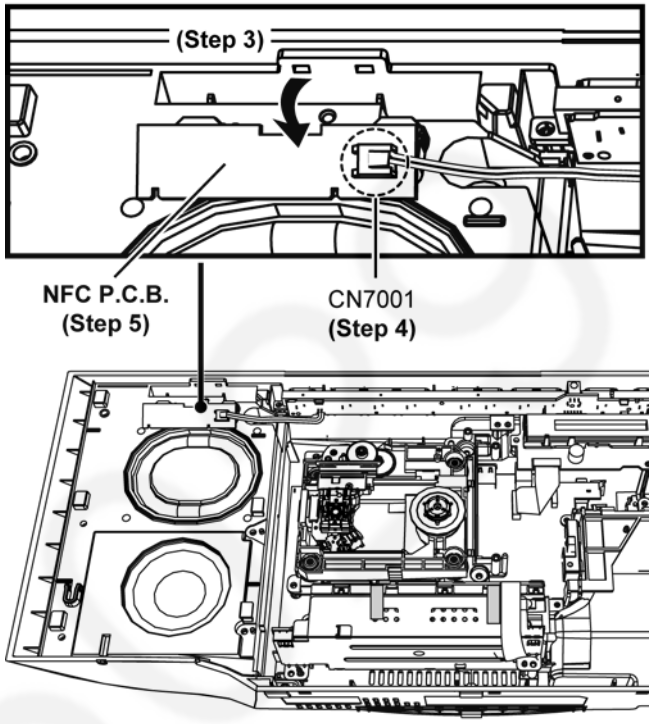

8.19. Disassembly of SMPS Unit

- Refer to “Disassembly of Front Ornament Unit (L) & (R)”
- Refer to “Disassembly of Front Panel Block”

Step 1 : Remove 5 screws.
Step 2 : Gently lift up 16P FFC.

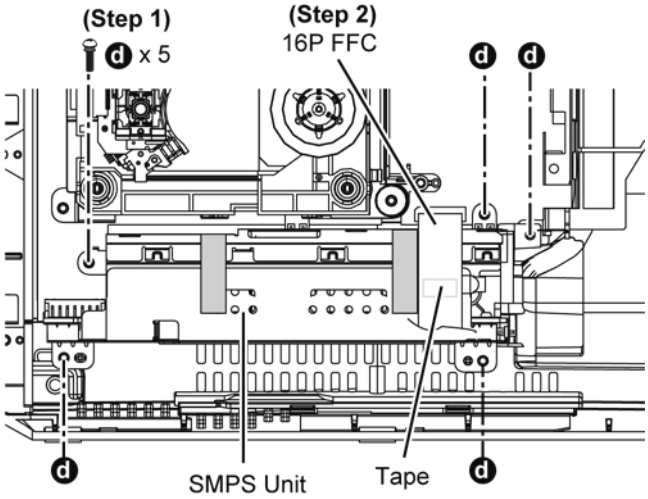

Step 3 : Gently lift up to remove SMPS Unit.

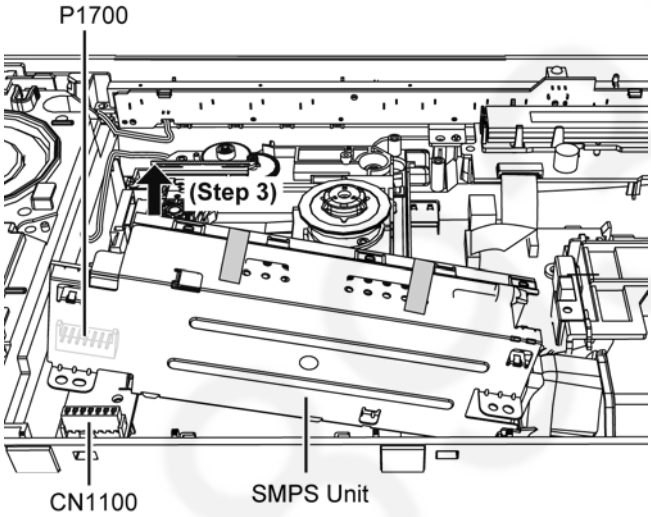

8.20. Disassembly of SMPS P.C.B.

- Refer to “Disassembly of SMPS Unit”

Step 1 : Remove screw.
Step 2 : Release catch.
Step 3 : Remove AC Inlet Holder.
Caution : During assembling, ensure AC Inlet Holder is fully catched to the SMPS Unit. A "click" sound will be heard when fully catched.

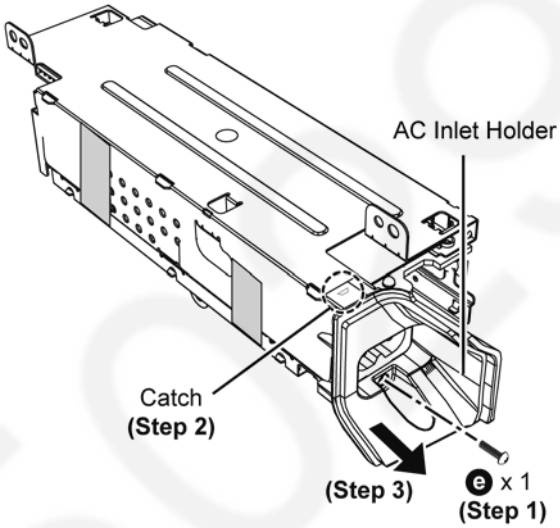

Step 4 : Lift up Himelons.
Caution : Replace Himelons if they are torn during disassembling.

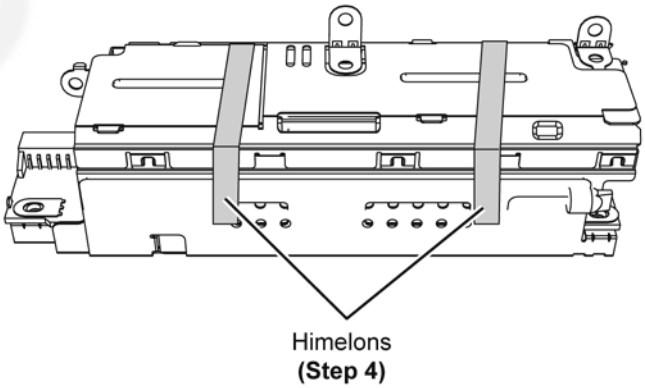

Step 5 : Press to release catches using a screwdriver and gently push up SMPS Shield Unit.

Caution : During assembling, ensure SMPS Shield Unit is properly catched to SMPS bracket as shown.

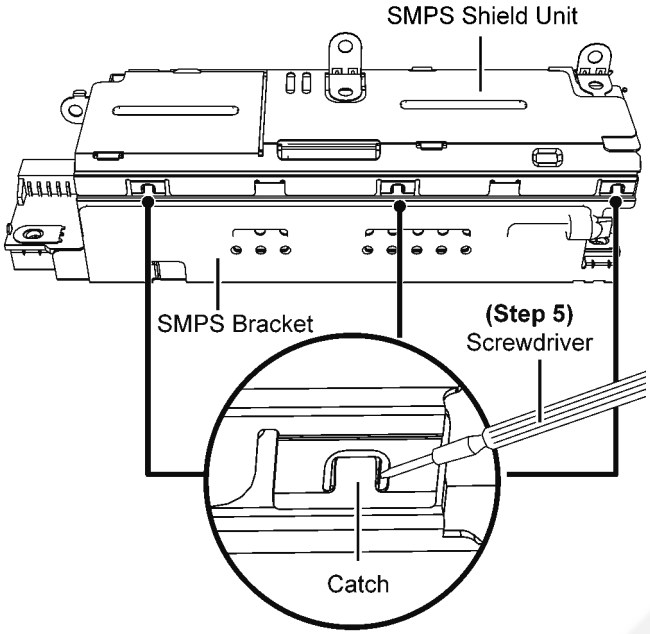

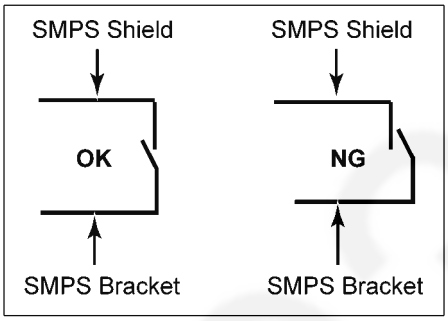

Step 6 : Gently push up SMPS Shield Unit to release catches and remove it.

Caution : During assembling, ensure SMPS Shield Unit is properly catched to SMPS bracket as shown.

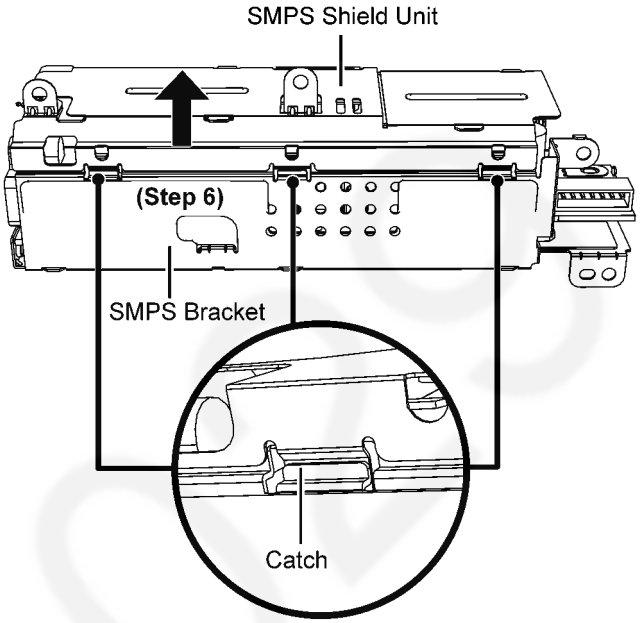

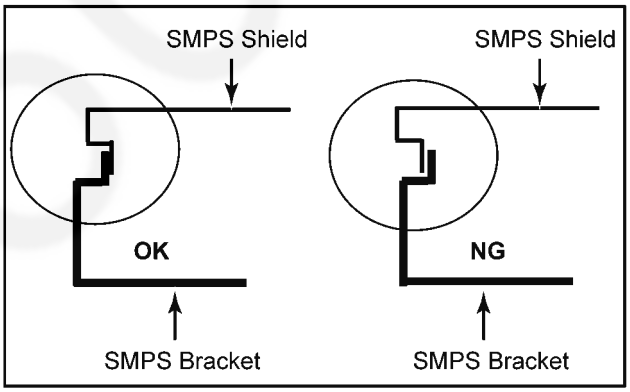

Step 7 : Remove 3 screws.

Step 8 : Remove SMPS P.C.B..

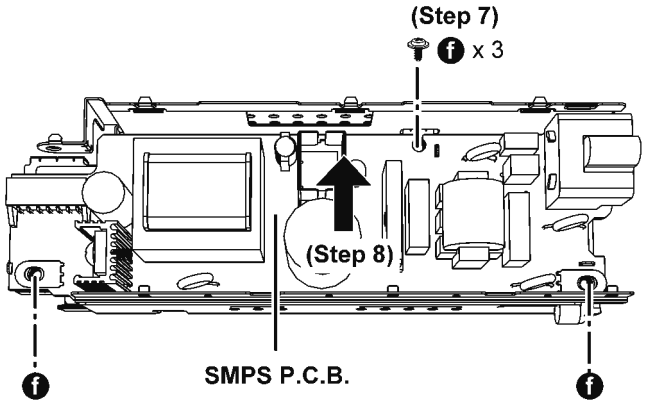

8.21. Disassembly of FL P.C.B. & Button Ornament Unit

- Refer to “Disassembly of Front Ornament Unit (L) & (R)”
- Refer to “Disassembly of Front Panel Block”
- Refer to “Disassembly of NFC P.C.B.”

Caution : During assembling, ensure Button Ornament Unit is fully seated and all button operations are working.

Step 1 : Remove 2 screws.
Step 2 : Detach 14P FFC at connector (CN900) on Button P.C.B..
Step 3 : Lift up FL P.C.B. and Button Ornament Unit.

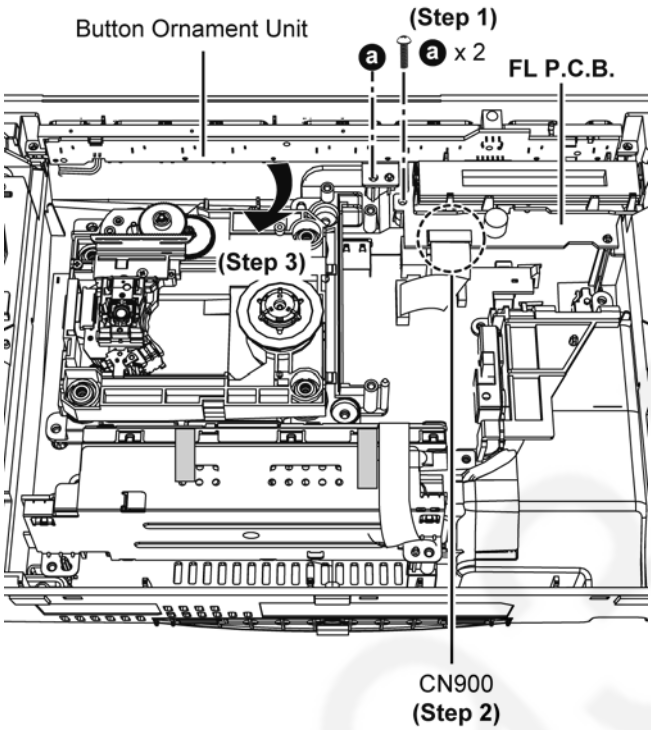

Step 4 : Detach 6P connector (P900) on FL P.C.B..
Step 5 : Remove FL P.C.B..

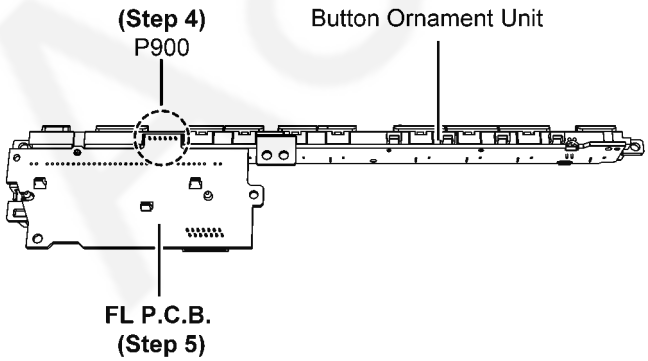

8.22. Disassembly of Button P.C.B.

- Refer to “Disassembly of Front Ornament Unit (L) & (R)”
- Refer to “Disassembly of Front Panel Block”
- Refer to “Disassembly of NFC P.C.B.”
- Refer to “Disassembly of FL P.C.B.”

Step 1 : Remove 4 screws.
Step 2 : Release catches.
Caution : During assembling, ensure Button P.C.B. is fully catched to Top Button.
Step 3 : Remove Button P.C.B..

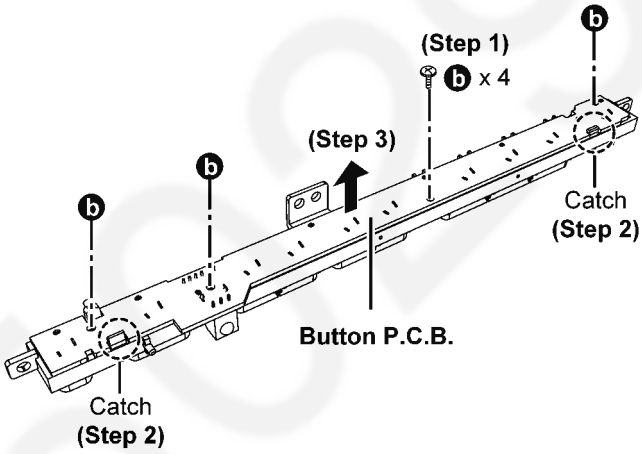

8.23. Disassembly of CD Mechanism

- Refer to “Disassembly of Front Ornament Unit (L) & (R)”
- Refer to “Disassembly of Front Panel Block”

Step 1 : Remove 2 screws.
Step 2 : Lift up CD Mechanism.

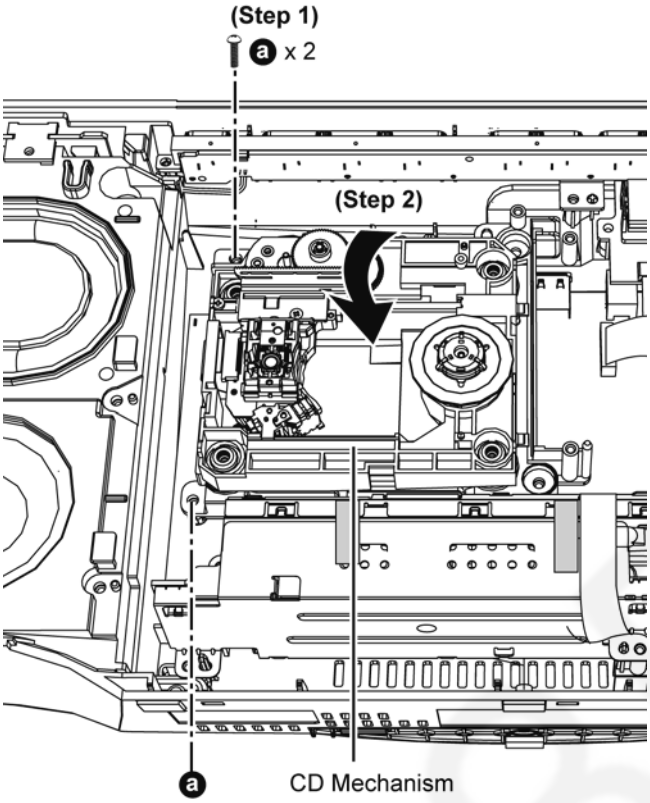

Step 3 : Detach 24P FFC at connector (P5003) on Main P.C.B..
Step 4 : Remove CD Mechanism.

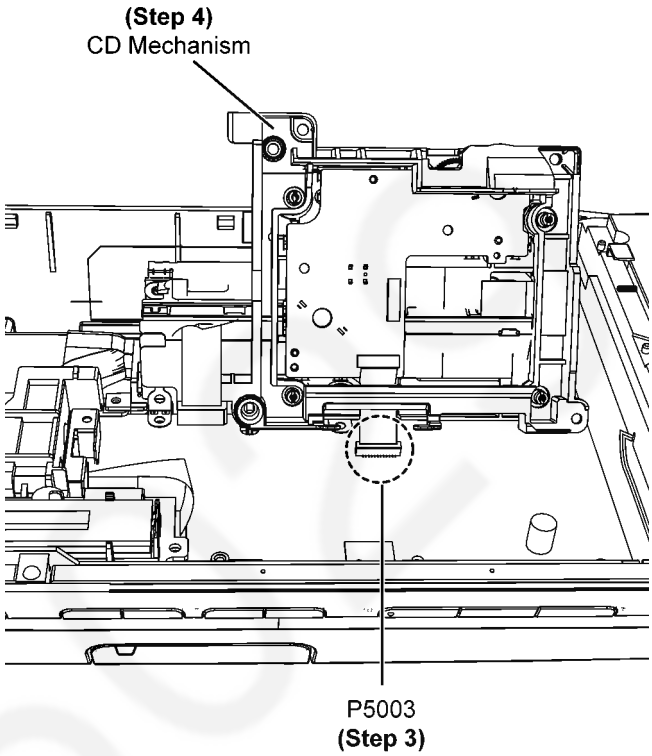

8.24. Disassembly of CD Interface P.C.B.

- Refer to “Disassembly of CD Mechanism”

Step 1 : Release catches and push down fixed pins as arrow shown.

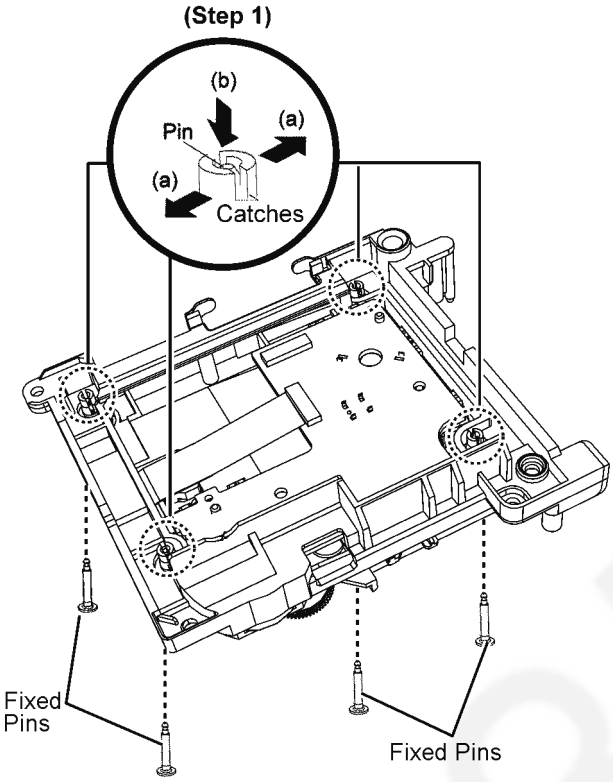

Step 2 : Lift up Mecha Chassis & remove Floating Springs.

Caution : Keep the Floating Springs and place them back during assembling.

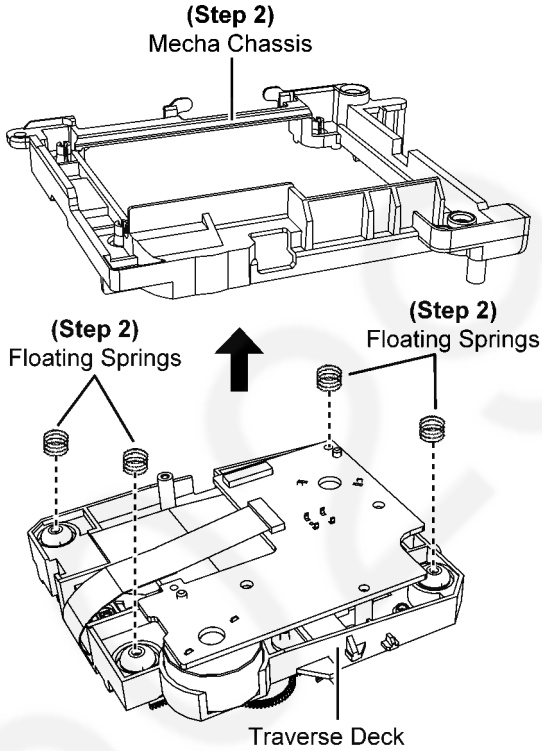

Step 3 : Remove 2 screws.

Step 4 : Desolder points on CD Interface P.C.B..

Step 5 : Lift up the Connector Cover.

Caution : Do not use strong force as it may damage the connector cover.

Step 6 : Detach 24P FFC at connector (CN7003) on CD Interface P.C.B..

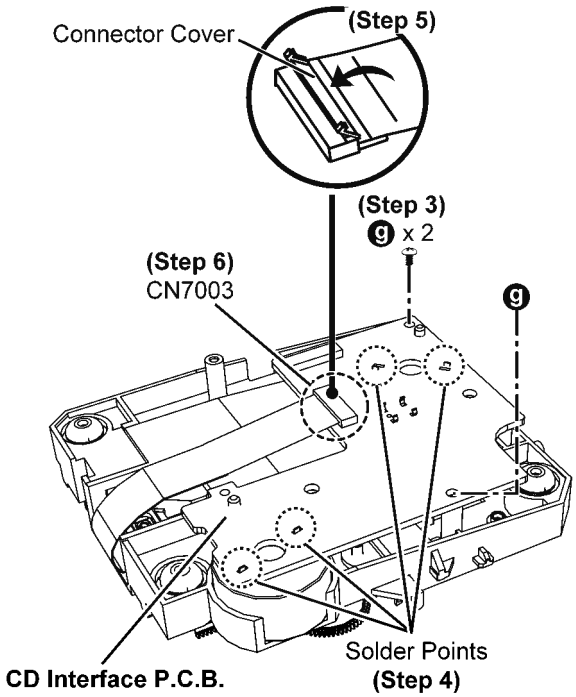

Step 7 : Attach short pin to 24P FFC of Traverse Unit.
Step 8 : Remove CD Interface P.C.B..

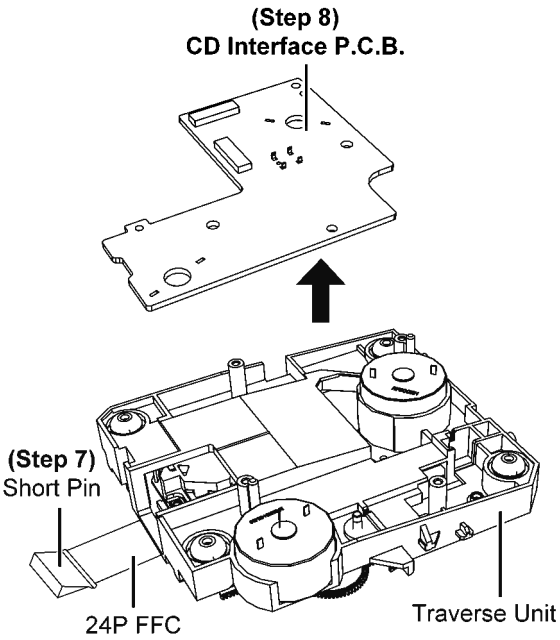

8.25. Disassembly of DAB Module and DAB Adapter P.C.B. (For HC397)

- Refer to “Disassembly of Front Ornament Unit (L) & (R)”
- Refer to “Disassembly of Front Panel Block”
- Refer to “Disassembly of SMPS Unit”
- Refer to “Disassembly of NFC P.C.B.”
- Refer to “(Step 1) - (Step 3) of item 8.21.”

Step 1 : Remove Nut (DAB).

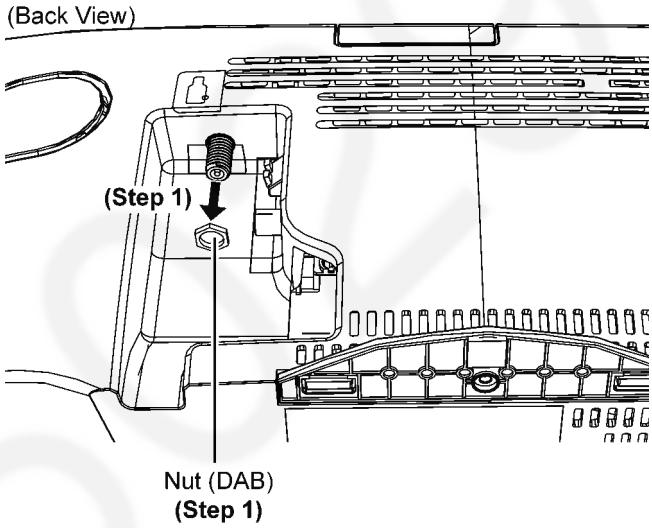

Step 2 : Detach 9P FFC at connector (CN6000) on Main P.C.B..
Step 3 : Remove 2 screws.
Step 4 : Remove Tuner Holder.

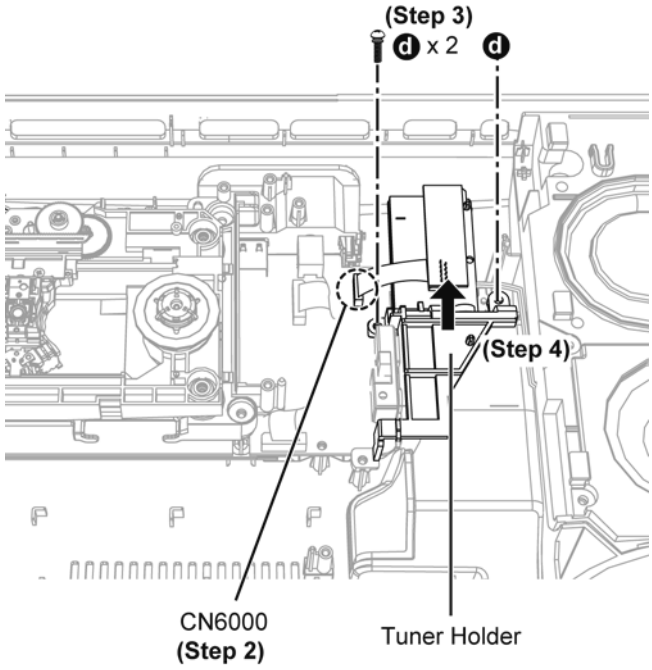

Step 5 : Lift up to remove DAB Unit.

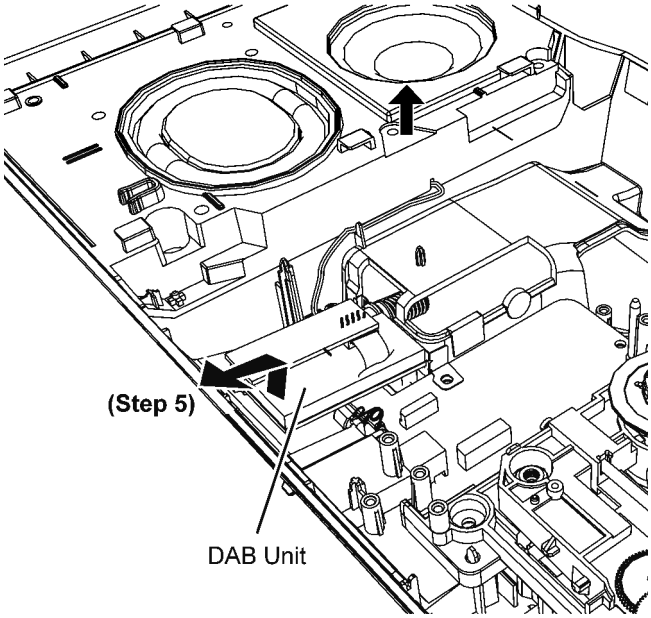

Step 6 : Detach DAB Adapter P.C.B..

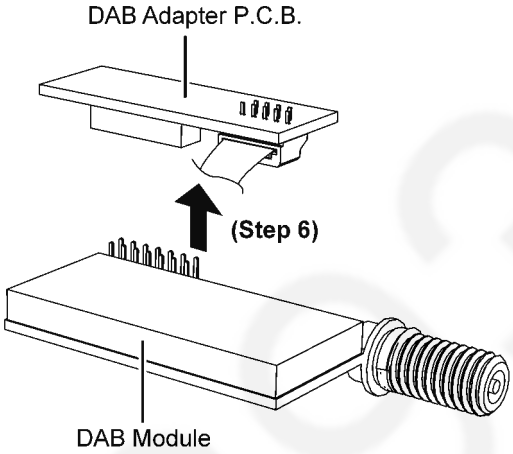

8.26. Disassembly of Main P.C.B. (For HC395)

- Refer to “Disassembly of Front Ornament Unit (L) & (R)”
- Refer to “Disassembly of Front Panel Block”
- Refer to “Disassembly of SMPS Unit”
- Refer to “Disassembly of CD Mechanism”

Caution:
In case either NFC P.C.B. or EEPROM IC (IC8004) on Main P.C.B. should break down, they need to be replaced at the same time as a pair.
For the details, please refer to "Service Navigation"

Step 1 : Remove 2 screws.
Step 2 : Remove Tuner Holder.
Step 3 : Remove screw.

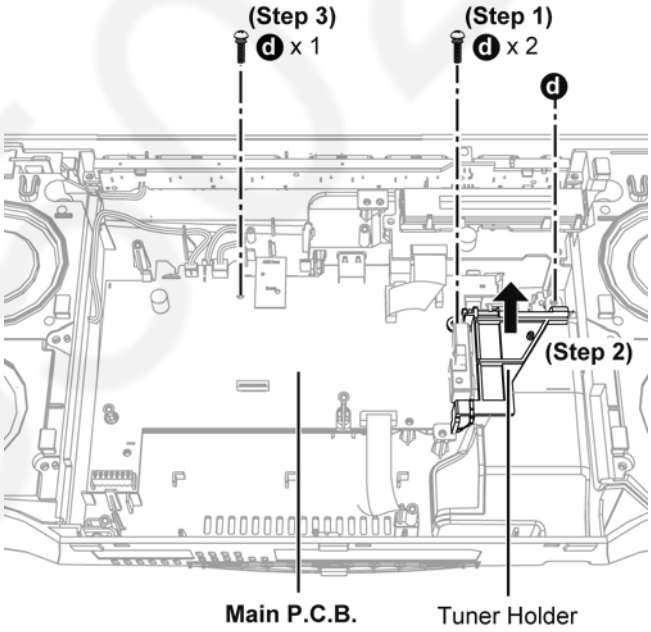

Step 4 : Detach 14P FFC at connector (CN6007) on Main P.C.B..
Step 5 : Detach 2P wire at connector (CN400) on Main P.C.B..
Step 6 : Detach 2P wire at connector (CN401) on Main P.C.B..

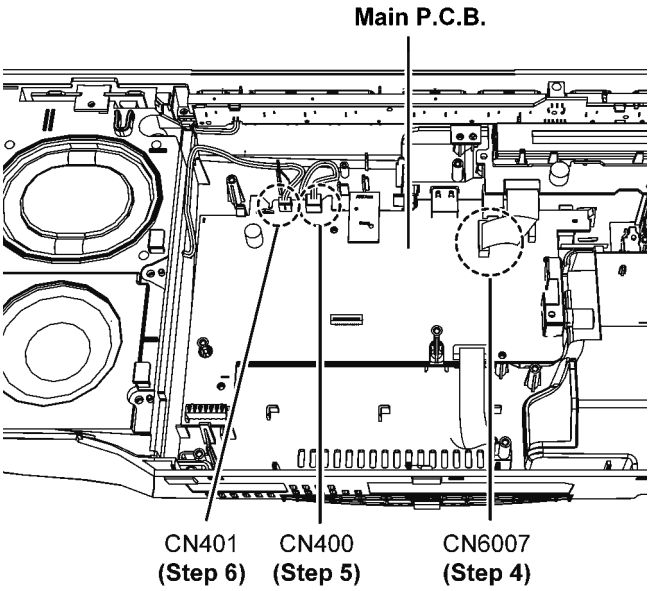

Step 7 : Release catches.
Step 8 : Slightly lift up to remove Main P.C.B..

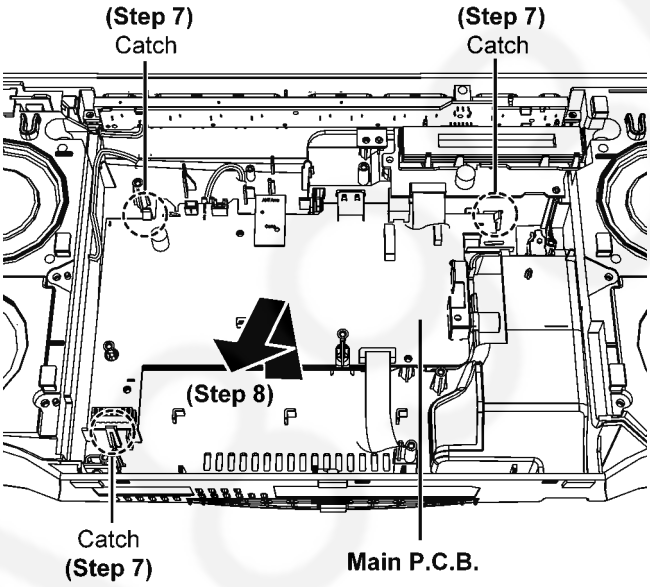

8.27. Disassembly of Main P.C.B. (For HC397)

- Refer to “Disassembly of Front Ornament Unit (L) & (R)”
- Refer to “Disassembly of Front Panel Block”
- Refer to “Disassembly of NFC P.C.B.”
- Refer to “Disassembly of SMPS Unit”
- Refer to “(Step 1) - (Step 3) of item 8.21.”
- Refer to “Disassembly of CD Mechanism”
- Refer to “(Step 1) - (Step 5) of item 8.25.”

Caution:
In case either NFC P.C.B. or EEPROM IC (IC8004) on Main P.C.B. should break down, they need to be replaced at the same time as a pair.
For the details, please refer to "Service Navigation"

Step 1 : Detach 2P wire at connector (CN400) on Main P.C.B..
Step 2 : Detach 2P wire at connector (CN401) on Main P.C.B..
Step 3 : Release catches.
Step 4 : Slightly lift up to remove Main P.C.B..

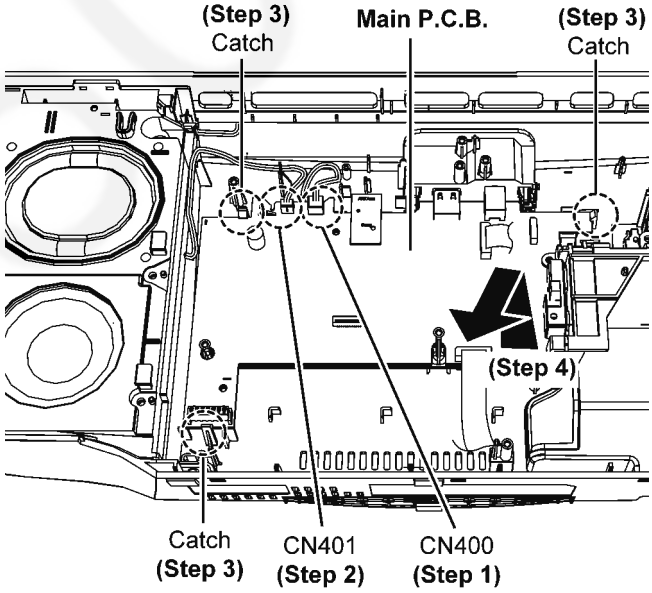

8.28. Disassembly of Front Speaker (SP1)

- Refer to “Disassembly of Front Ornament Unit (L) & (R)”
- Refer to “Disassembly of Front Panel Block”
- Refer to “Disassembly of NFC P.C.B.”
- Refer to “(Step 1) - (Step 3) of item 8.21.”
- Refer to “Disassembly of CD Mechanism”

Caution : When assembled Button Ornament Unit, ensure it is seated properly and all button operations are working.

Step 1 : Release 2P wire from slots.

Caution : During assembling, dressed 2P wire into slots of Rear Panel Block.

Step 2 : Detach 2P wire at connector (CN401) on Main P.C.B..

Step 3 : Remove 3 screws.

Step 4 : Remove Speaker Cabinet Unit (L).

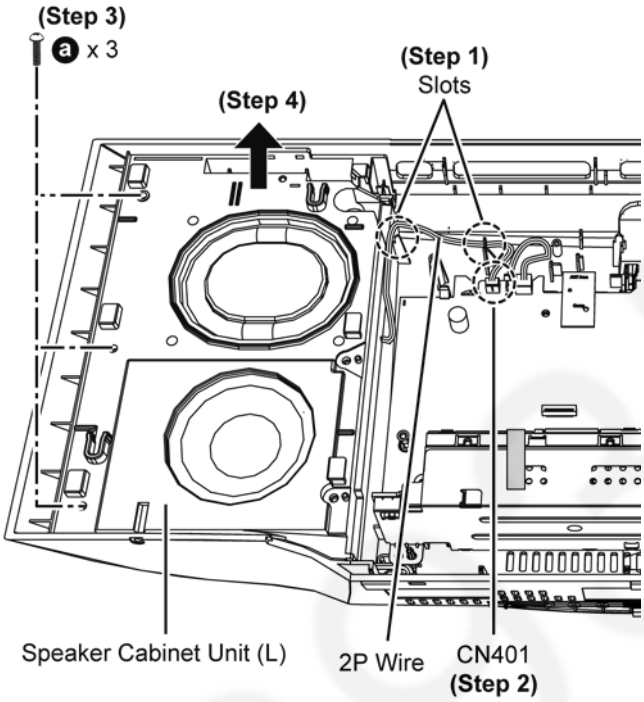

Step 5 : Desolder speaker wire at the terminals on Front Speaker (SP1).

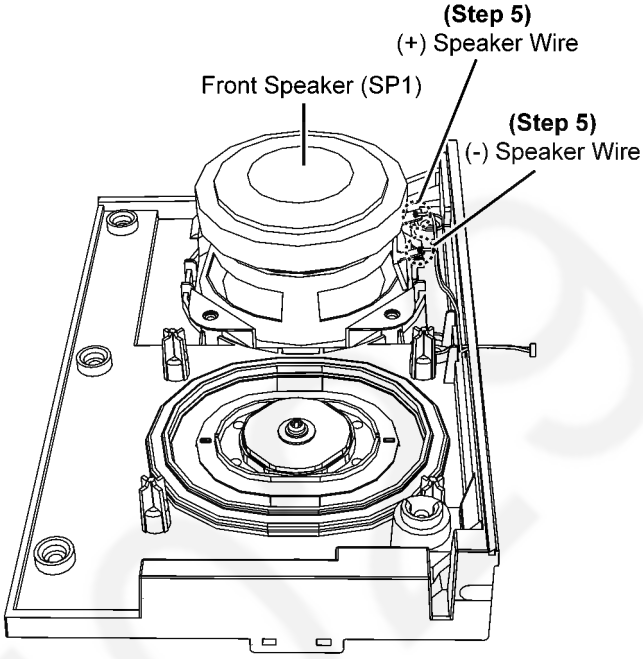

Step 6 : Remove 4 screws.

Step 7 : Remove Front Speaker (SP1).

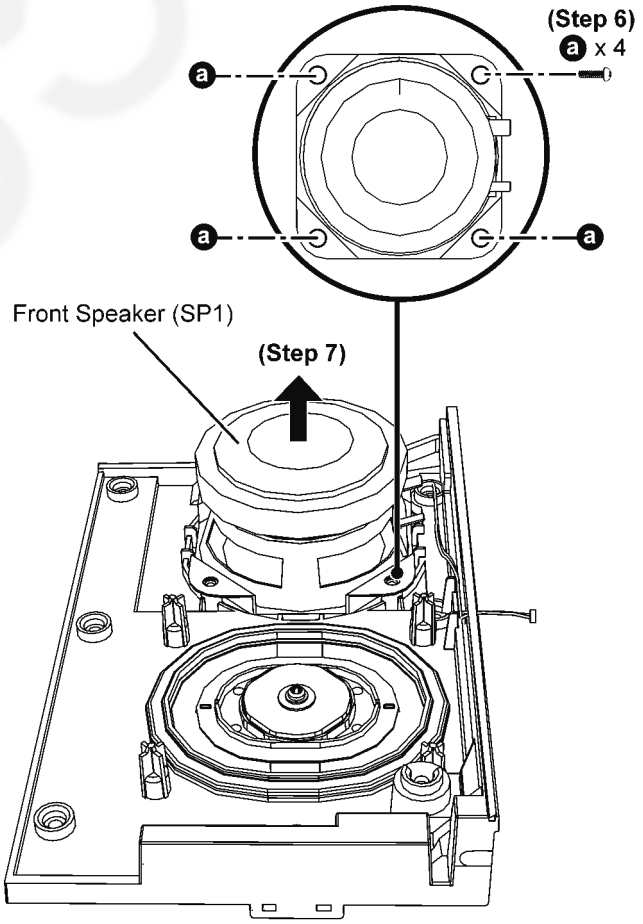

8.29. Disassembly of Front Speaker (SP2)

- Refer to “Disassembly of Front Ornament Unit (L) & (R)”
- Refer to “Disassembly of Front Panel Block”
- Refer to “Disassembly of NFC P.C.B.”
- Refer to “Disassembly of SMPS Unit”
- Refer to “(Step 1) - (Step 3) of item 8.21.”
- Refer to “Disassembly of CD Mechanism”
- Refer to “(Step 1) - (Step 5) of item 8.25.” (For HC397)
- Refer to “Disassembly of Main P.C.B.”

Caution : When assembled Button Ornament Unit, ensure it is seated properly and all button operations are working.

Step 1 : Remove Back Shield.

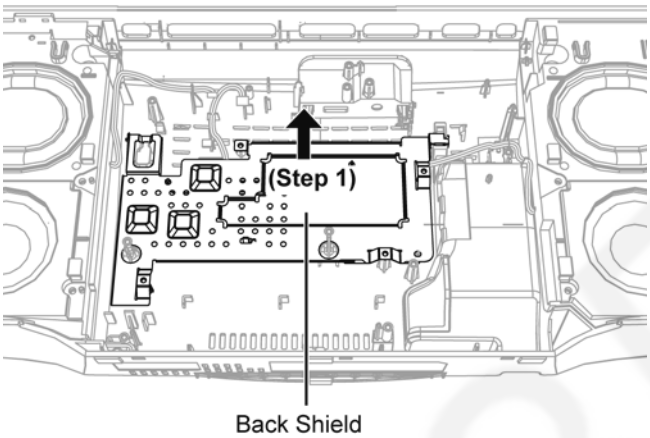

Step 2 : Release 2P wire from slots.

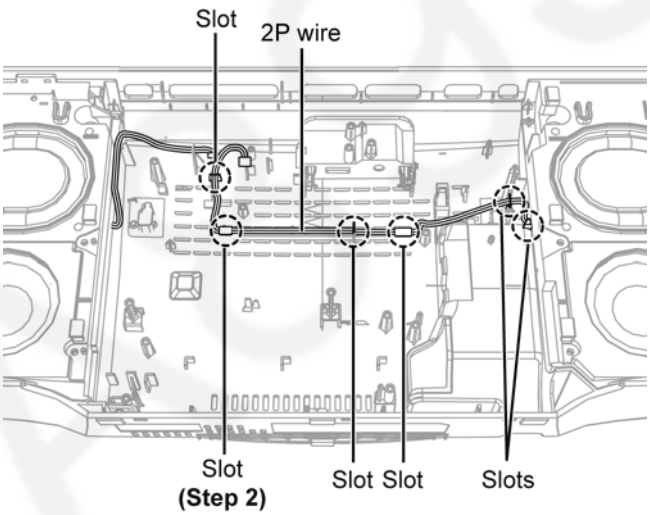

Step 3 : Remove 3 screws.
Step 4 : Remove Speaker Cabinet Unit (R) Block.

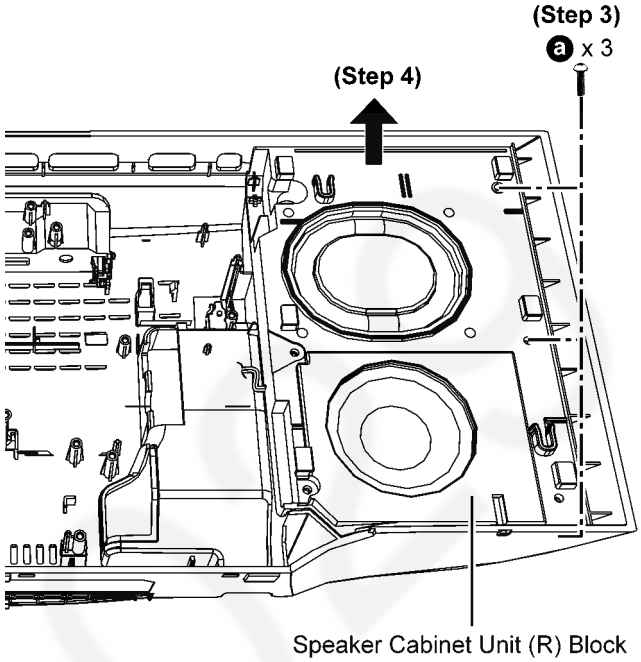

Step 5 : Desolder speaker wire at the terminals on Front Speaker (SP2).

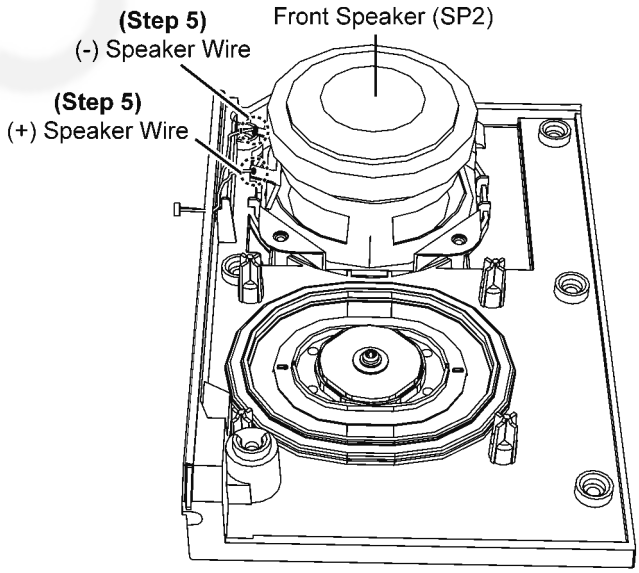

Step 6 : Remove 4 screws.
Step 7 : Remove Front Speaker (SP2).

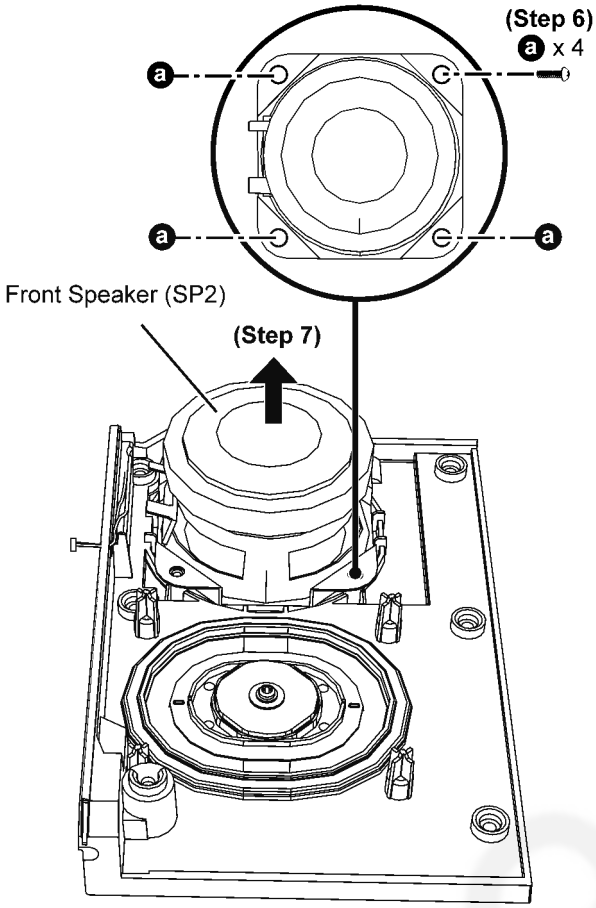

8.30. Disassembly of Passive Radiator Unit (SP3)

- Refer to “Disassembly of Front Ornament Unit (L) & (R)”
- Refer to “Disassembly of Front Panel Block”
- Refer to “Disassembly of NFC P.C.B.”
- Refer to “(Step 1) - (Step 3) of item 8.21.”
- Refer to “Disassembly of CD Mechanism”
- Refer to “(Step 1) - (Step 4) of item 8.28.”

Caution : When assembled the Button Ornament Unit, ensure it is seated properly and all button operations are working.

Step 1 : Slightly lift up to remove Passive Radiator Unit (SP3).
Caution : During assembling, ensure Passive Radiator Unit (SP3) is seated under the guides of cabinet as shown.

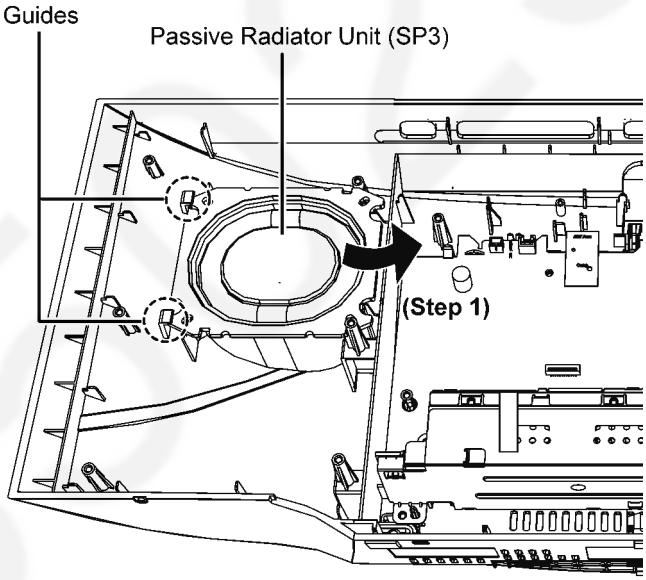

8.31. Disassembly of Passive Radiator Unit (SP4)

- Refer to “Disassembly of Front Ornament Unit (L) & (R)”
- Refer to “Disassembly of Front Panel Block”
- Refer to “Disassembly of NFC P.C.B.”
- Refer to “Disassembly of SMPS Unit”
- Refer to “(Step 1) - (Step 3) of item 8.21.”
- Refer to “Disassembly of CD Mechanism”
- Refer to “(Step 1) - (Step 5) of item 8.25.” (For HC397)
- Refer to “Disassembly of Main P.C.B.”
- Refer to “(Step 1) - (Step 4) of item 8.29.”

Caution : When assembled Button Ornament Unit, ensure it is seated properly and all button operations are working.

Step 1 : Slightly lift up to remove Passive Radiator Unit (SP4).

Caution : During assembling, ensure Passive Radiator Unit (SP4) is seated under guides of cabinet as shown.

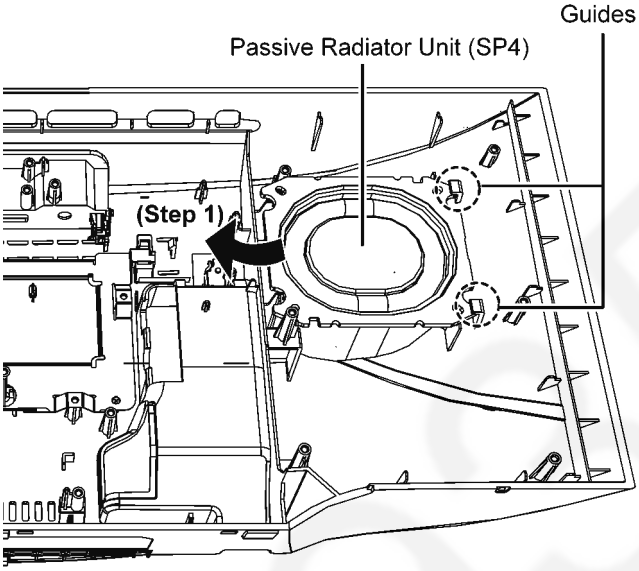

8.32. Disassembly of Jack Lid

- Refer to “Disassembly of Front Ornament Unit (L) & (R)”
- Refer to “Disassembly of Front Panel Block”
- Refer to “Disassembly of NFC P.C.B.”
- Refer to “Disassembly of SMPS Unit”
- Refer to “(Step 1) - (Step 3) of item 8.21.”
- Refer to “Disassembly of CD Mechanism”
- Refer to “(Step 1) - (Step 5) of item 8.25.” (For HC397)
- Refer to “Disassembly of Main P.C.B.”

Caution : When assembled Button Ornament Unit, ensure it is seated properly and all button operations are working.

Step 1 : Release Jack Lid Spring as shown.

Step 2 : Release shaft of the Jack Lid inwards in order of sequences (1) to (2) as shown.

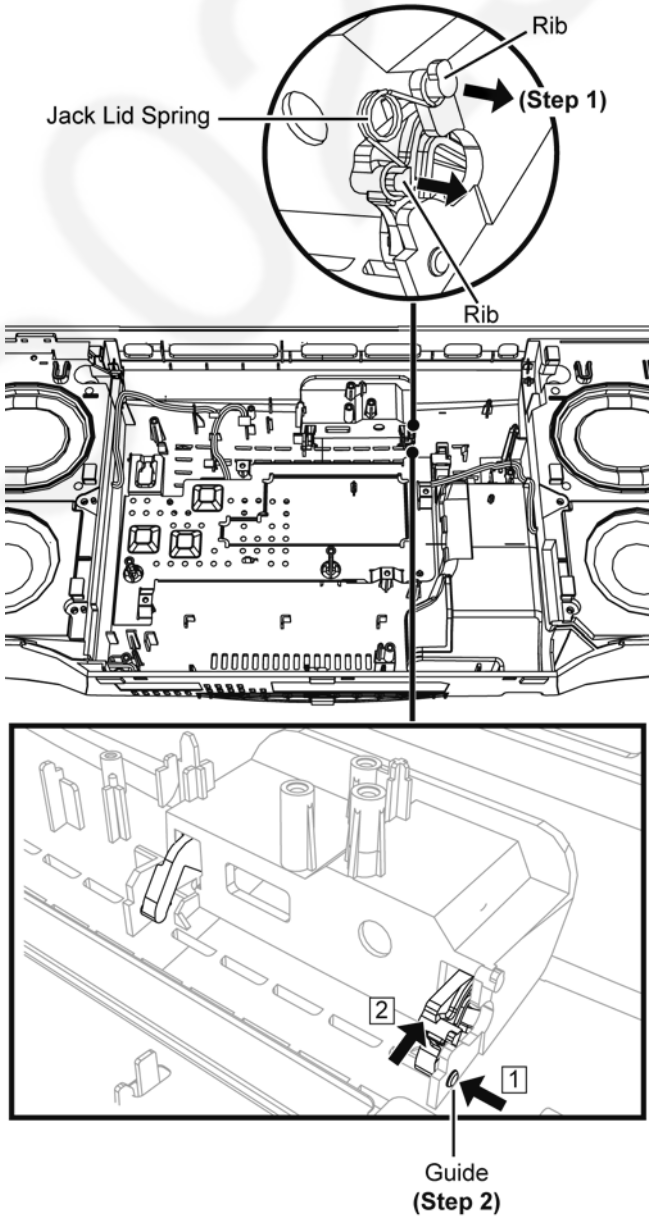

Step 3 : Lift up to remove Jack Lid in the direction as shown.

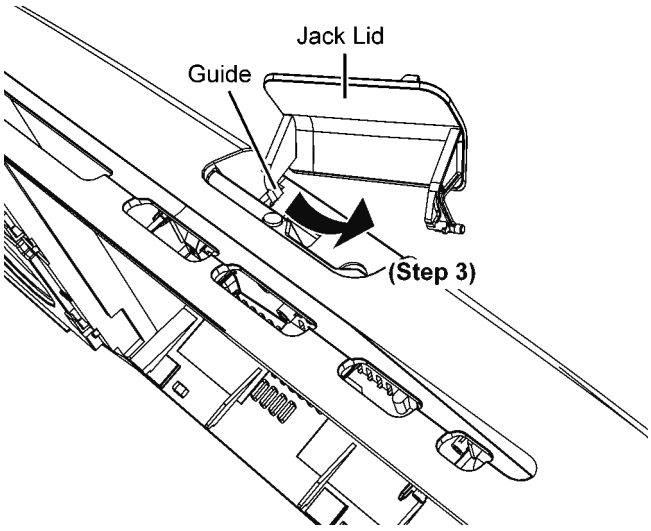

A89350229

9 Service Position

Note: For description of the disassembly procedures, see the Section 8

9.1. Checking of SMPS P.C.B.

Step 1 : Remove Front Ornament Unit (L) & (R).
Step 2 : Remove Front Panel Block.
Step 3 : Remove SMPS Unit.
Step 4 : Remove SMPS P.C.B..
Step 5 : Remove screw.
Step 6 : Release 5P wire from the slots.

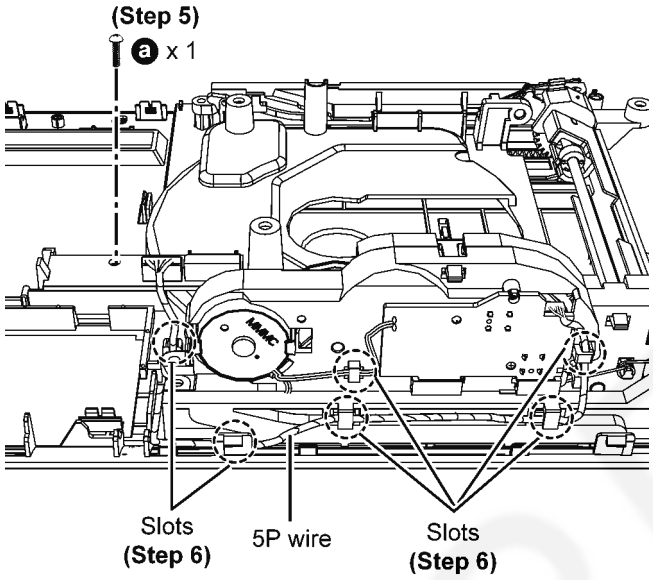

Step 7 : Release catches.
Step 8 : Remove Bridge P.C.B..

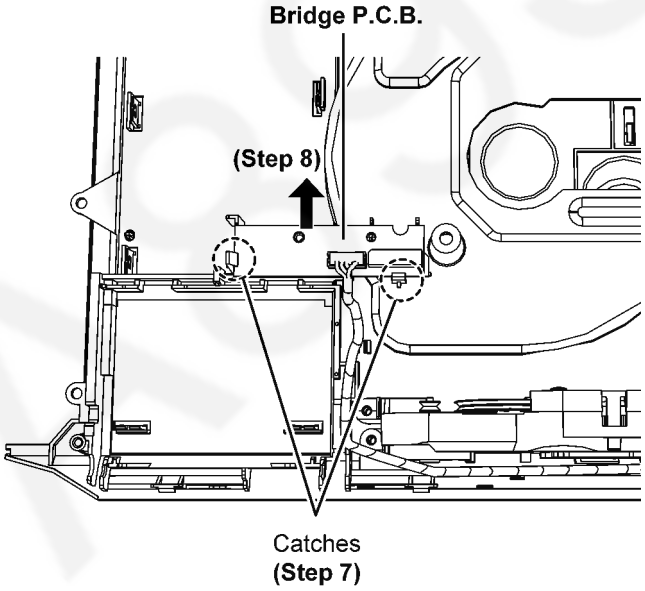

Step 9 : Place a Support Block to support Front Panel Block as shown.
Step 10 : Connect 14P FFC at connector (CN941) on Bridge P.C.B..

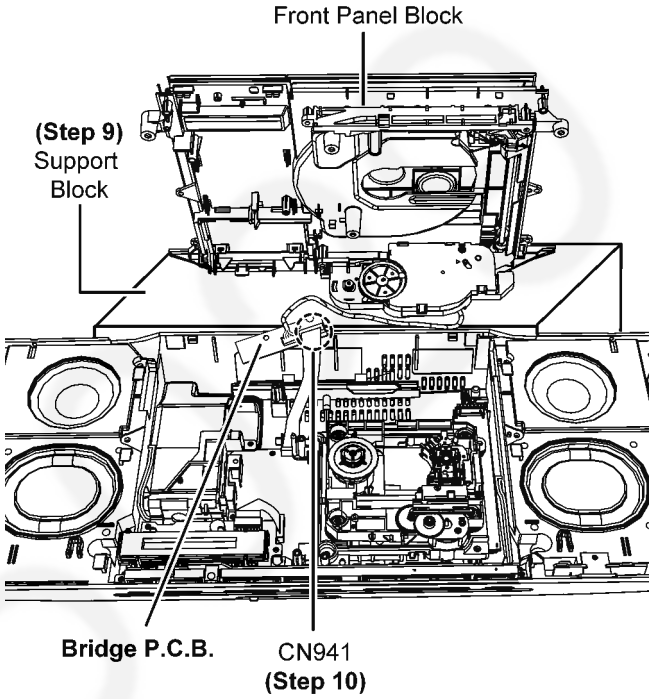

Step 11 : Place SMPS P.C.B. on the Insulating Material.
Step 12 : Connect 7P extension cable (REX1538) from P1700 on SMPS P.C.B. to CN1100 on Main P.C.B..

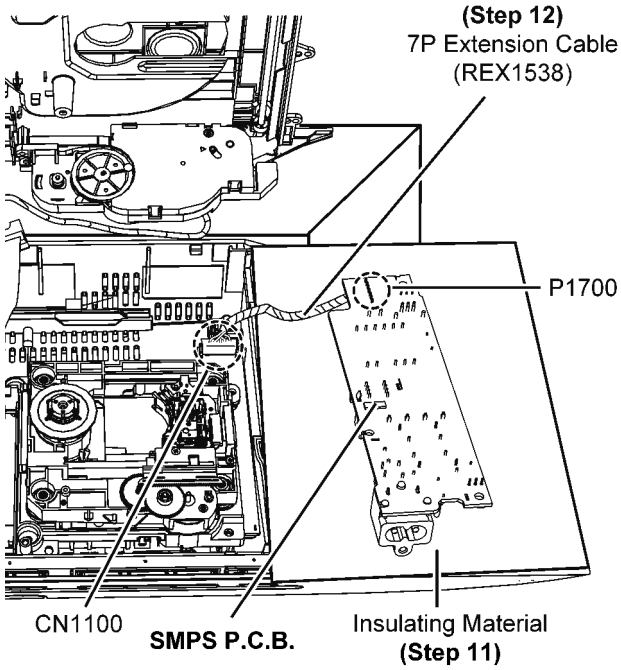

Step 13 : Check SMPS P.C.B. according to the diagram shown.

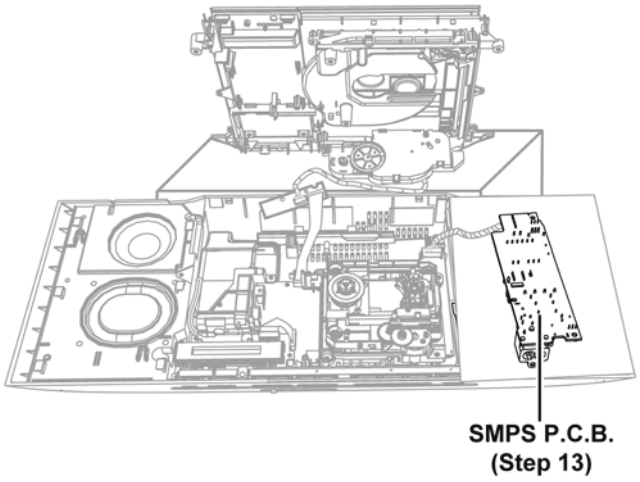

9.2. Checking of FL P.C.B.

Step 1 : Remove Front Ornament Unit (L) & (R).
Step 2 : Remove Front Panel Block.
Step 3 : Remove NFC P.C.B..
Step 4 : Remove 2 screws.
Step 5 : Detach 14P FFC at connector (CN900) on Button P.C.B..
Step 6 : Lift up FL P.C.B. and Button Ornament Unit.

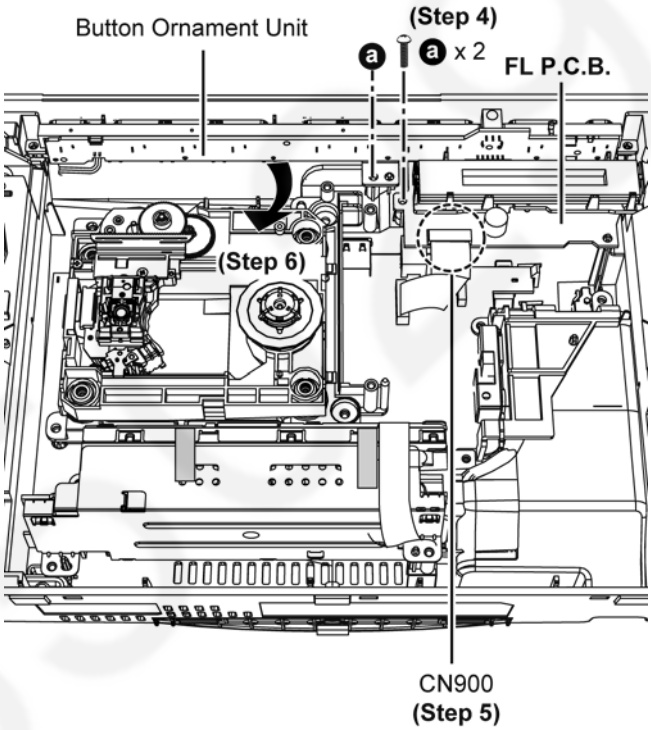

Step 7 : Remove screw.
Step 8 : Release 5P wire from slots.

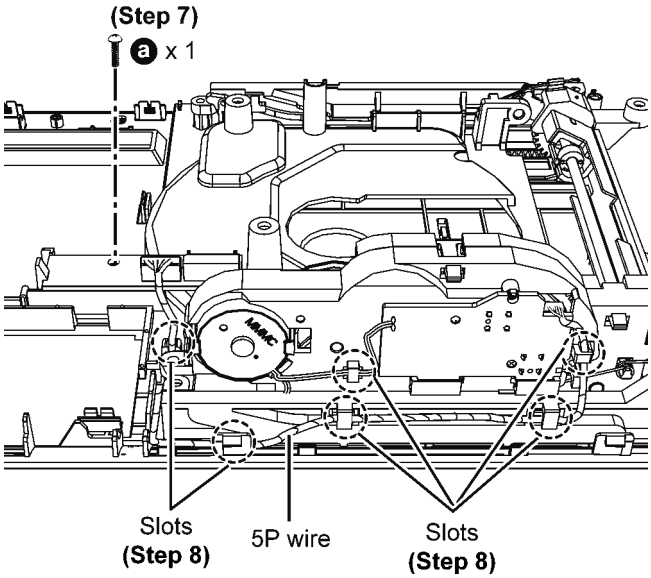

Step 9 : Release catches.
Step 10 : Remove Bridge P.C.B..

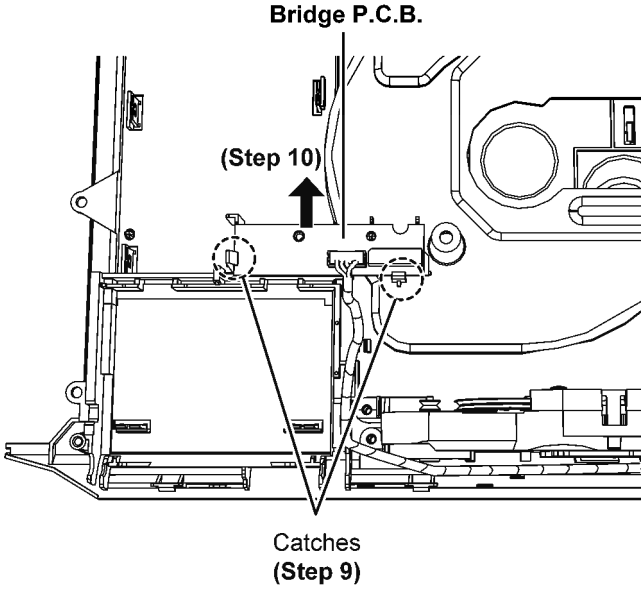

Step 11 : Place a Support Block to support Front Panel Block as shown.
Step 12 : Connect 14P FFC at connector (CN941) on Bridge P.C.B..

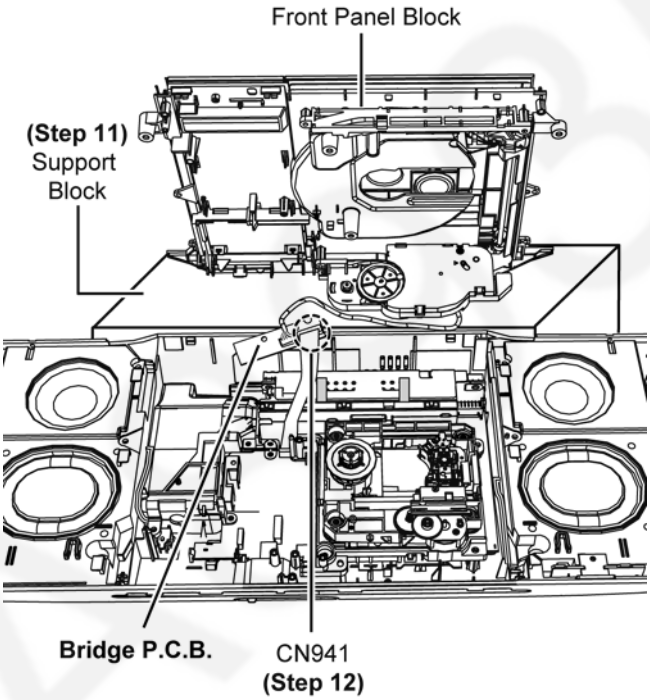

Step 13 : Place FL P.C.B. on the Insulating Material.
Step 14 : Connect 14P FFC at connector (CN900) on FL P.C.B..
Step 15 : Connect 2P wire at connector (CN7001) on NFC P.C.B..

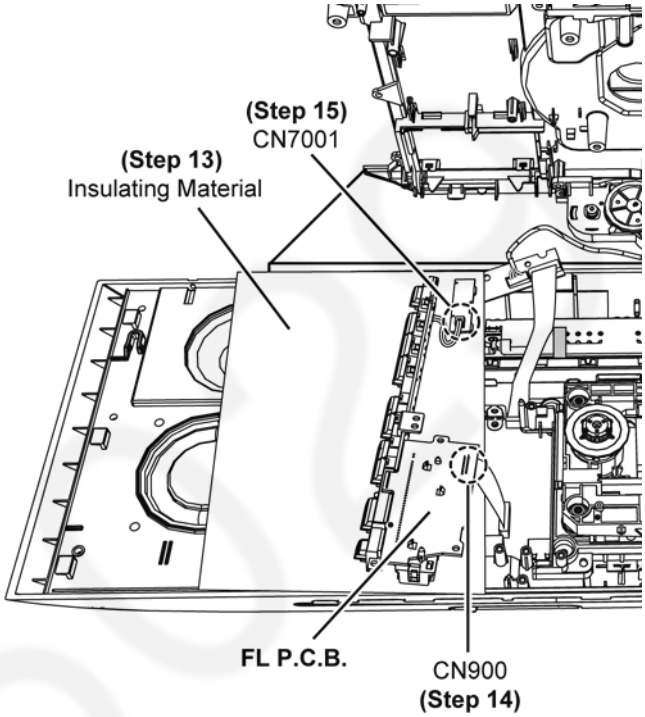

Step 16 : Check FL P.C.B. according to the diagram shown.

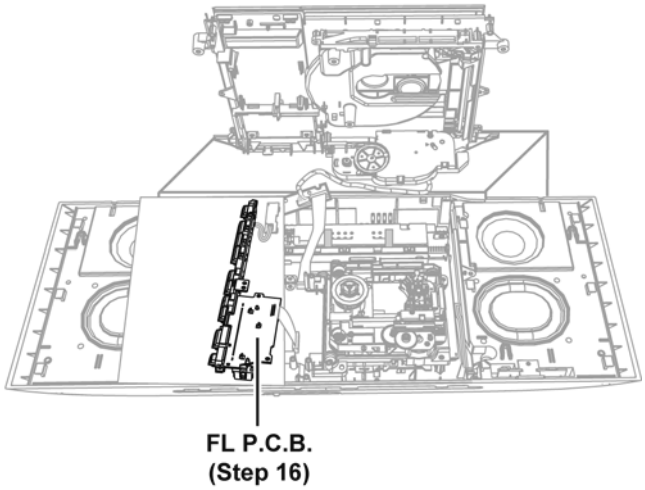

9.3. Checking of CD Interface P.C.B.

Note : Insert CD before Checking CD Interface P.C.B.

Step 1 : Remove Front Ornament Unit (L) & (R).
Step 2 : Remove Front Panel Block.
Step 3 : Remove CD Mechanism.
Step 4 : Remove screw.
Step 5 : Release 5P wire from the slots.

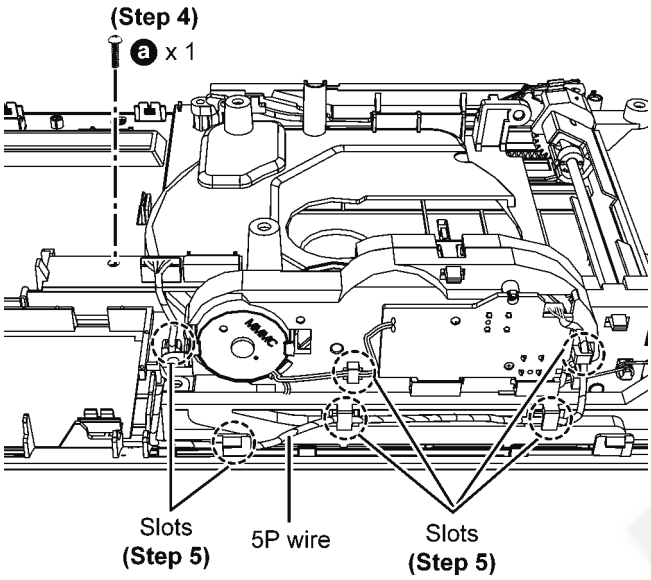

Step 6 : Release catches.
Step 7 : Remove Bridge P.C.B..

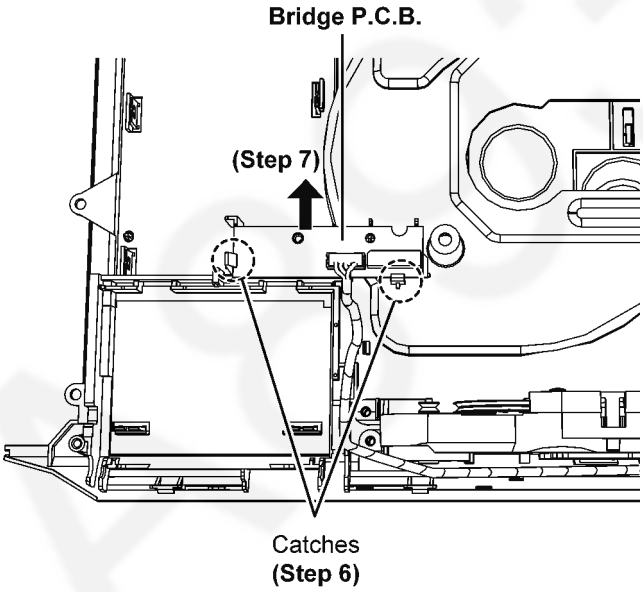

Step 8 : Place a Support Block to support Front Panel Block as shown.
Step 9 : Connect 14P FFC at connector (CN941) on Bridge P.C.B..

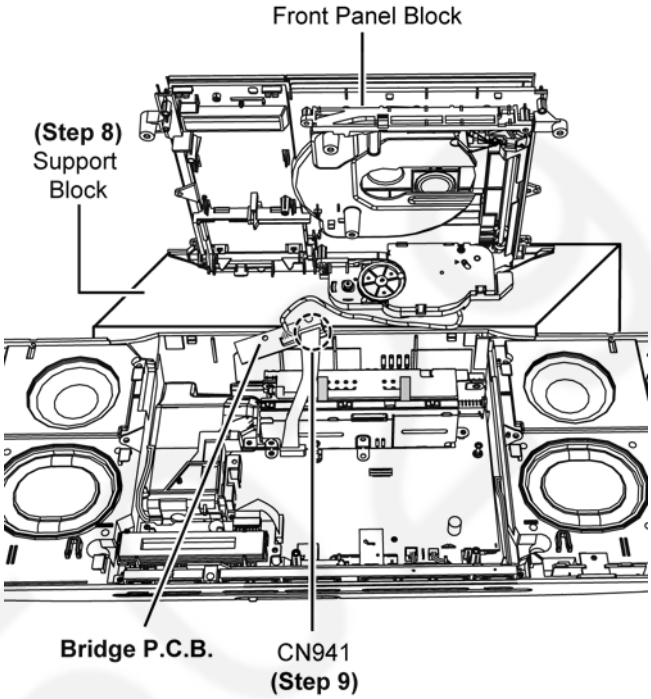

Step 10 : Place CD Mechanism on Insulating Material.
Step 11 : Connect 24P extension cable (REE1978) from P5003 on Main P.C.B. to CN7002 on CD Interface P.C.B..

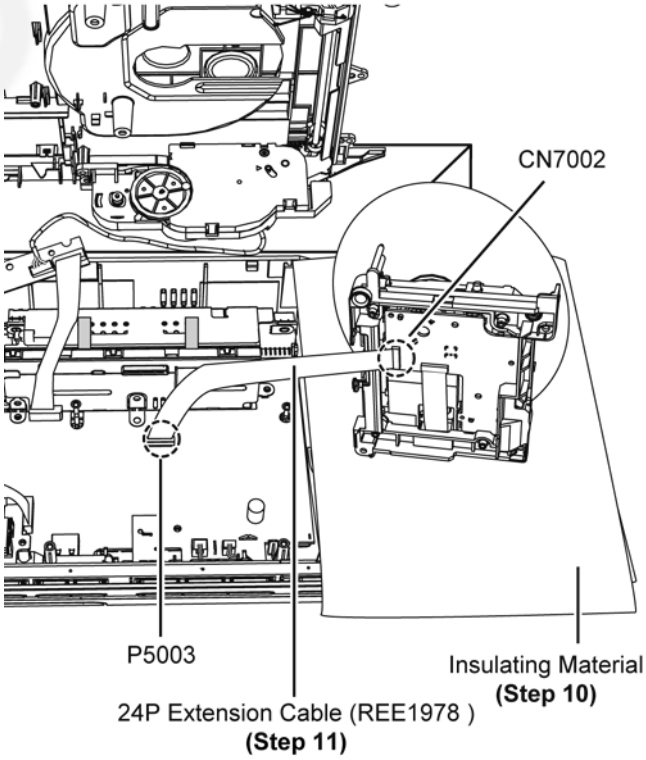

Step 12 : Check CD Interface P.C.B. according to the diagram shown.

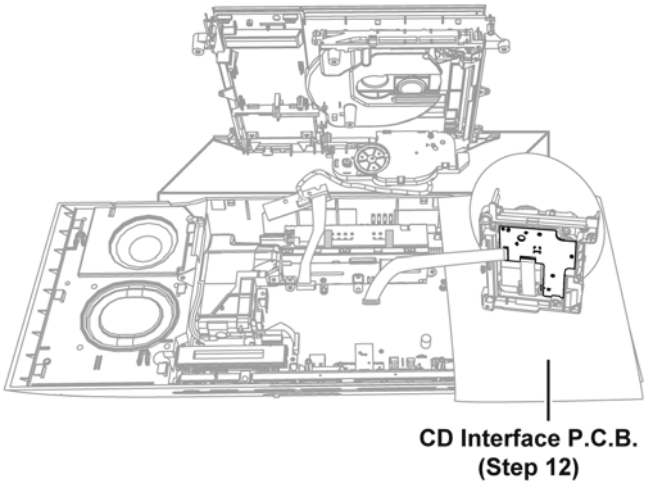

9.4. Checking of Main P.C.B.

Step 1 : Remove Front Ornament Unit (L) & (R).
Step 2 : Remove Front Panel Block.
Step 3 : Remove NFC P.C.B..
Step 4 : Remove SMPS Unit.
Step 5 : Remove Bottom Ornament Unit.
Step 6 : Remove CD Mechanism.
Step 7 : Remove DAB Unit. (HC397)
Step 8 : Remove Main P.C.B..
Step 9 : Place Main P.C.B. on the Insulating Material.
Step 10 : Connect 2P wire at connector (CN400) on Main P.C.B..
Step 11 : Connect 2P wire at connector (CN401) on Main P.C.B..

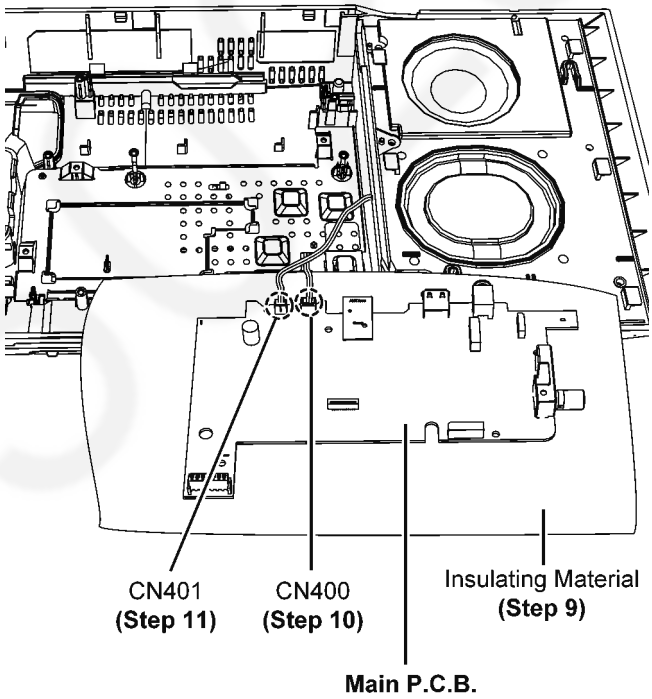

Step 12 : Place Bottom Ornament Unit & NFC P.C.B. on Insulating Material.
Step 13 : Connect 14P FFC at connector (CN6007) on Main P.C.B..
Step 14 : Connect 2P wire at connector (CN7001) on NFC P.C.B..

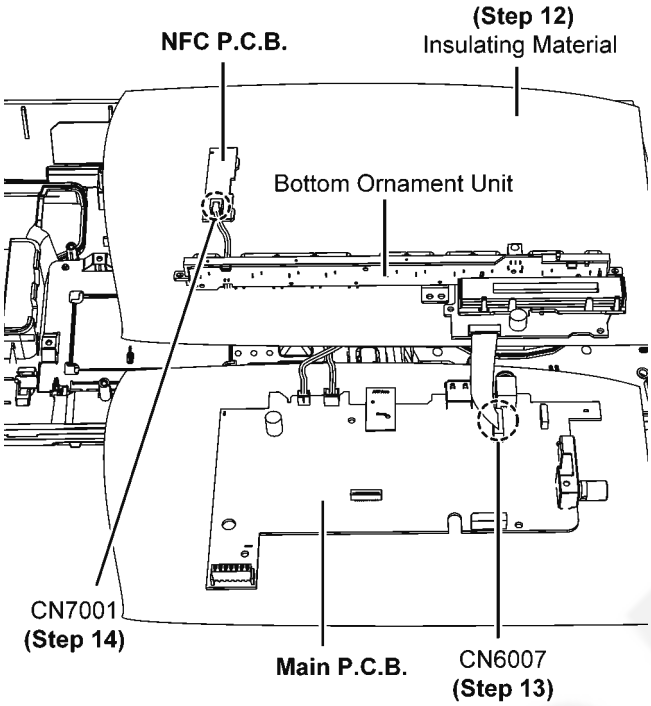

Step 15 : Place SMPS Unit as shown.
Step 16 : Connect 7P extension cable (REX1538) from CN1100 on Main P.C.B. to P1700 on SMPS P.C.B..

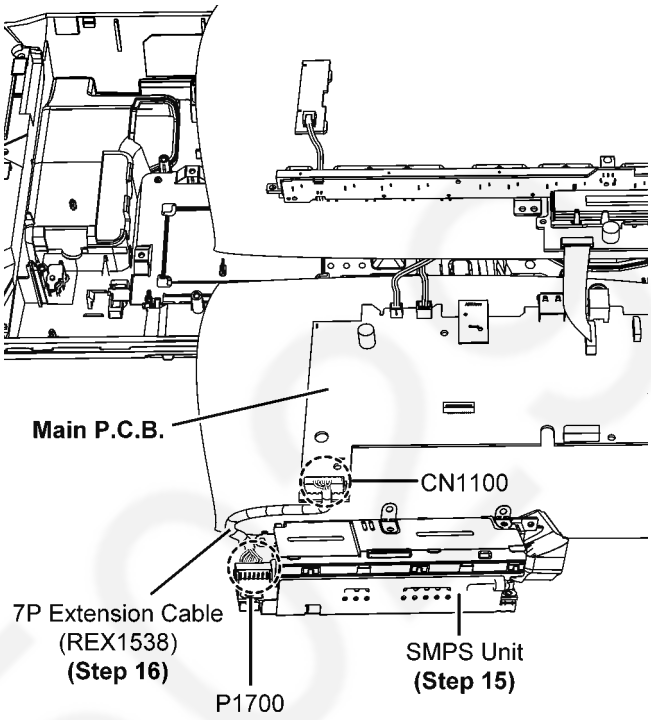

Step 17 : Place CD Mechanism as shown.
Step 18 : Connect 24P extension cable (REE1978) from P5003 on Main P.C.B. to CN7002 on CD Interface P.C.B..

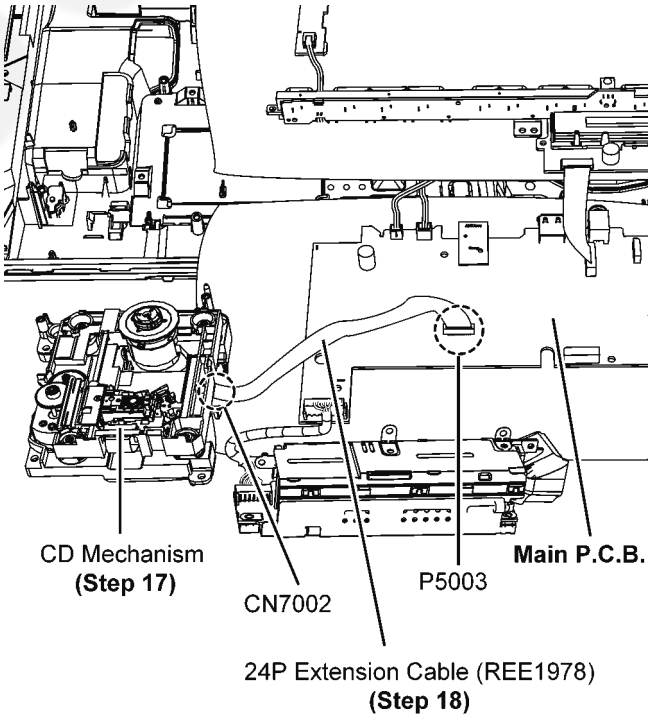

Step 19 : Remove screw.
Step 20 : Release 5P wire from the slots.

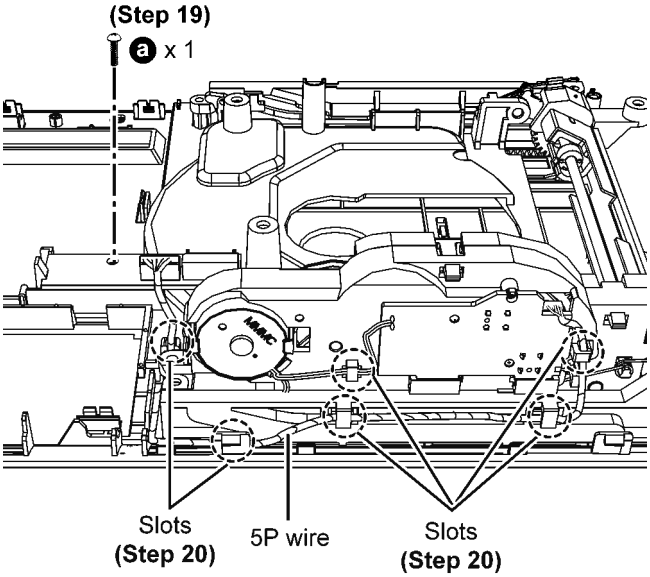

Step 21 : Release catches.
Step 22 : Remove Bridge P.C.B..

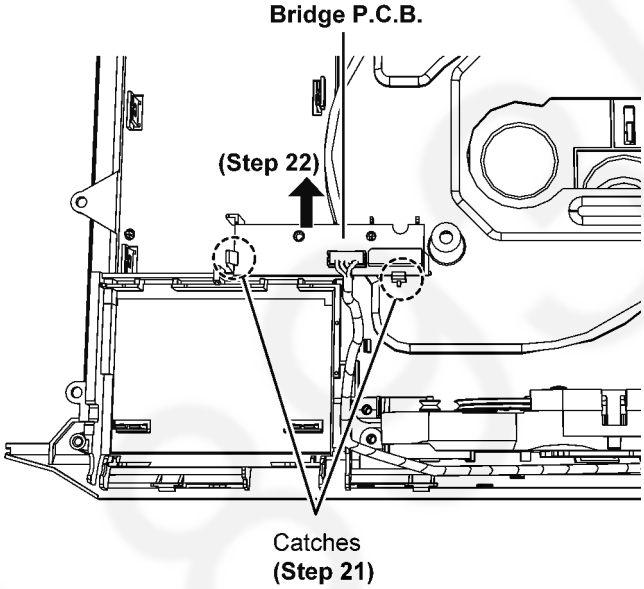

Step 23 : Place Front Panel Block as shown.
Step 24 : Connect 14P FFC at connector (CN941) on Bridge P.C.B..

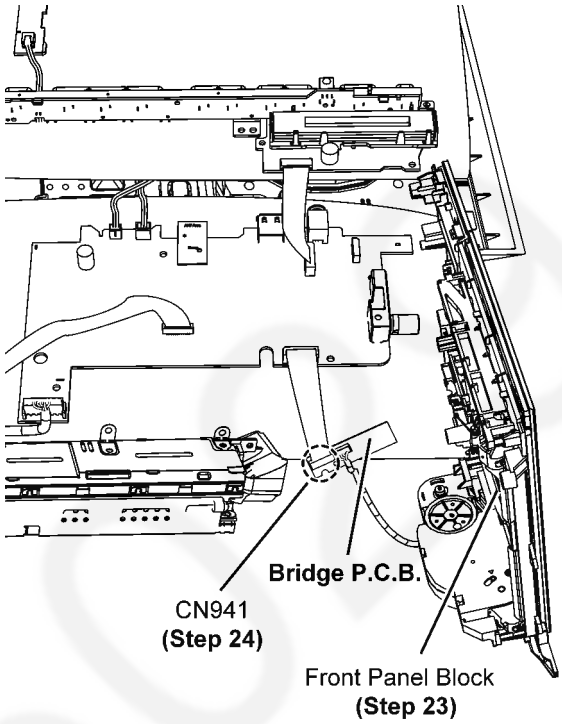

Step 25 : Check Main P.C.B. according to the diagram shown.

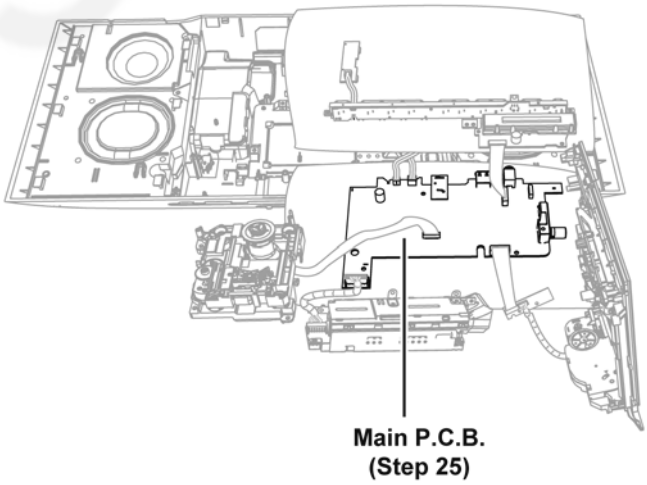

A89350229

10 Block Diagram

10.1. SYSTEM CONTROL (1/2) BLOCK DIAGRAM

: CD SIGNAL LINE

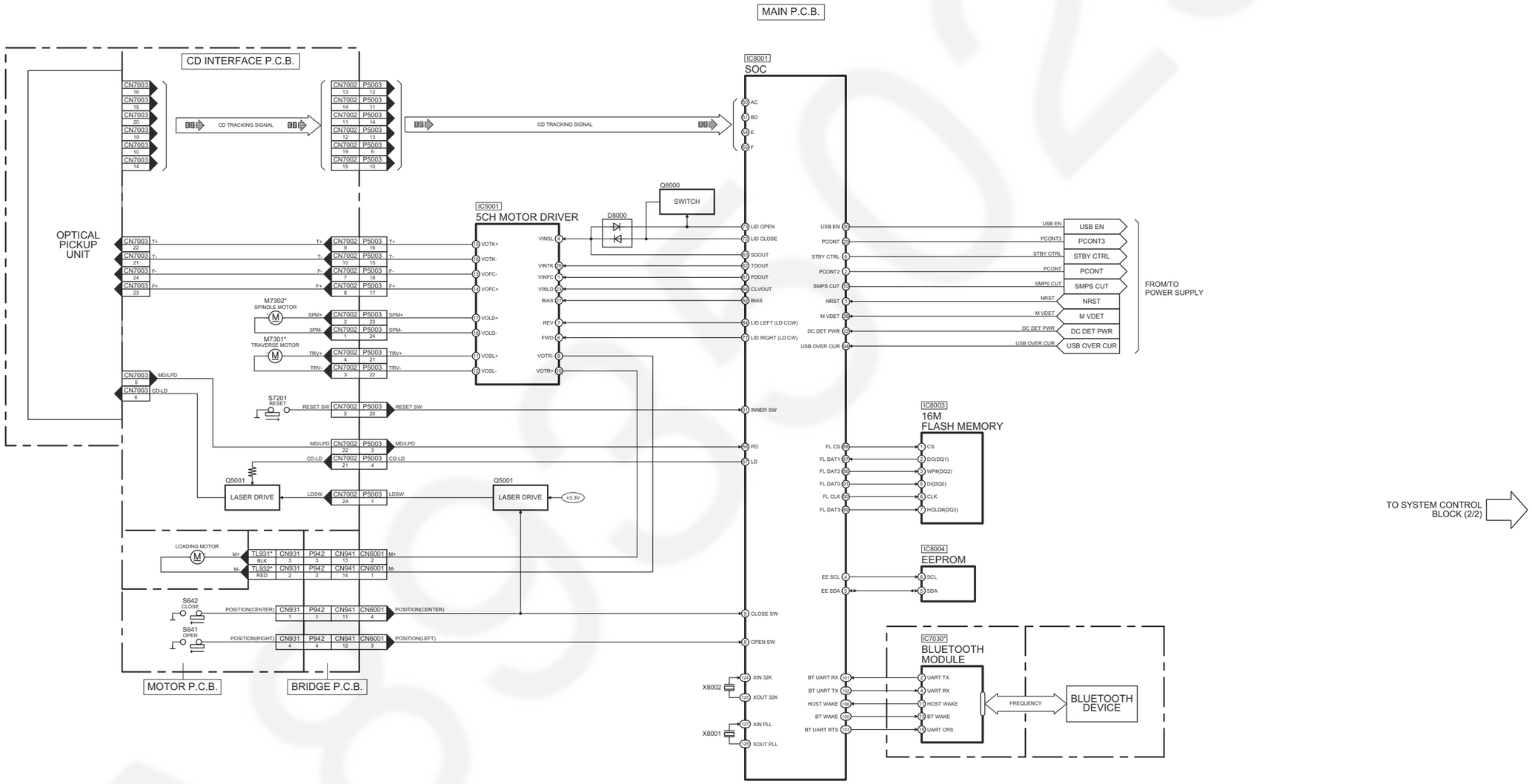

NOTE: “ * ” REF IS FOR INDICATION ONLY

SC-HC395EG,SC-HC397EB/EG SYSTEM CONTROL (1/2) BLOCK DIAGRAM

10.2. SYSTEM CONTROL (2/2) BLOCK DIAGRAM

: CD SIGNAL LINE

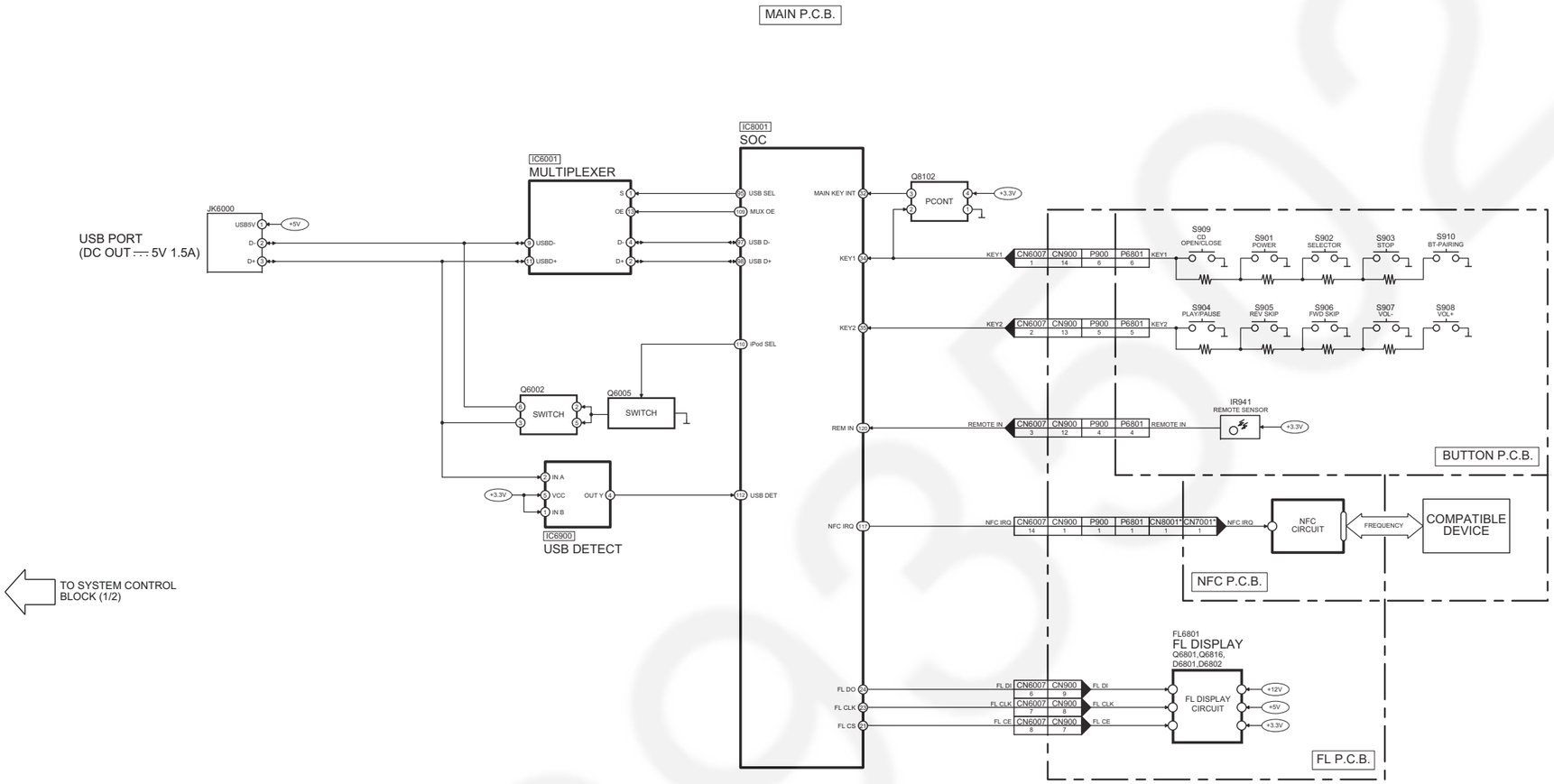

NOTE: " * " REF IS FOR INDICATION ONLY

SC-HC395EG,SC-HC397EB/EG SYSTEM CONTROL (2/2) BLOCK DIAGRAM

10.3. AUDIO BLOCK DIAGRAM

: CD SIGNAL LINE : TUNER/AUX SIGNAL LINE : AUDIO SIGNAL LINE : DAB SIGNAL LINE

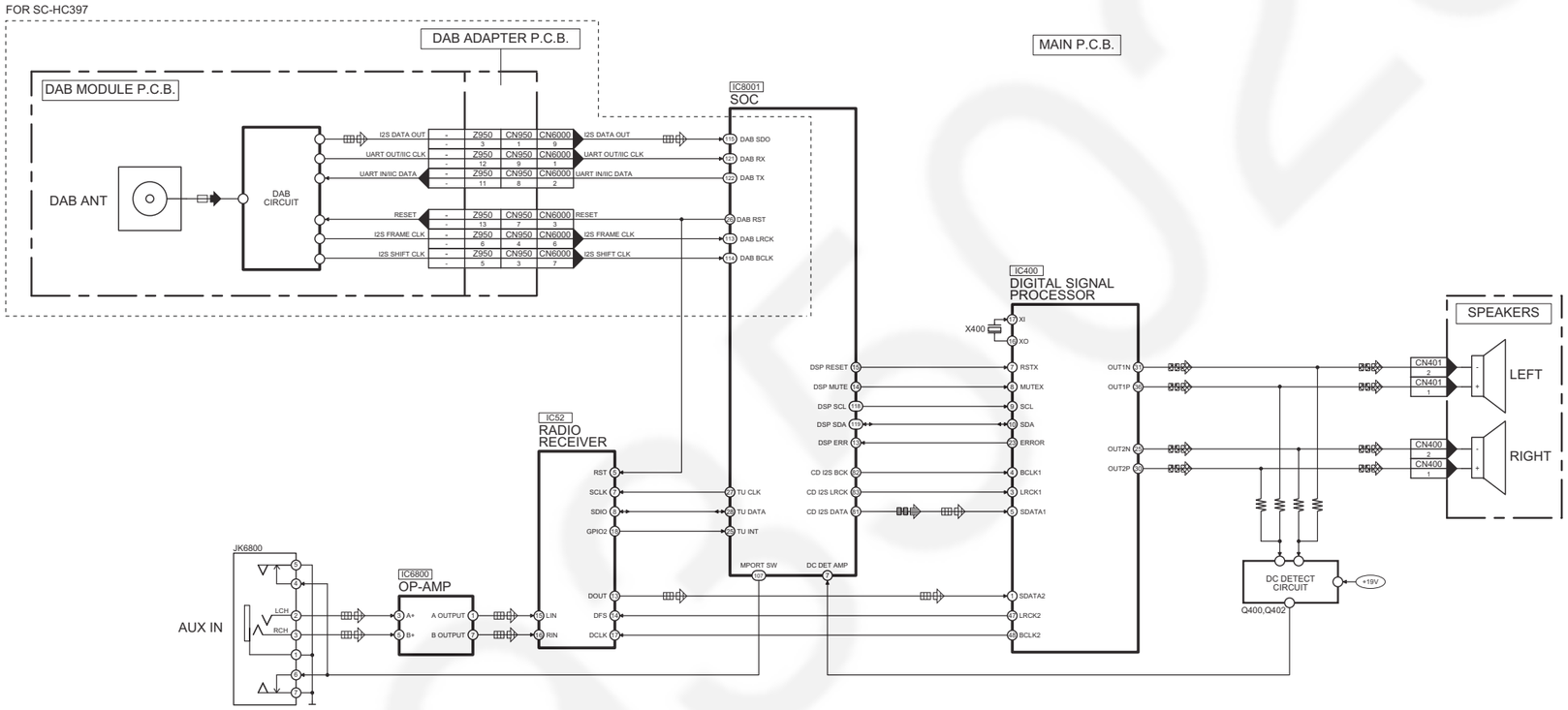

SC-HC395EG,SC-HC397EB/EG AUDIO BLOCK DIAGRAM

10.4. POWER SUPPLY (1/2) BLOCK DIAGRAM

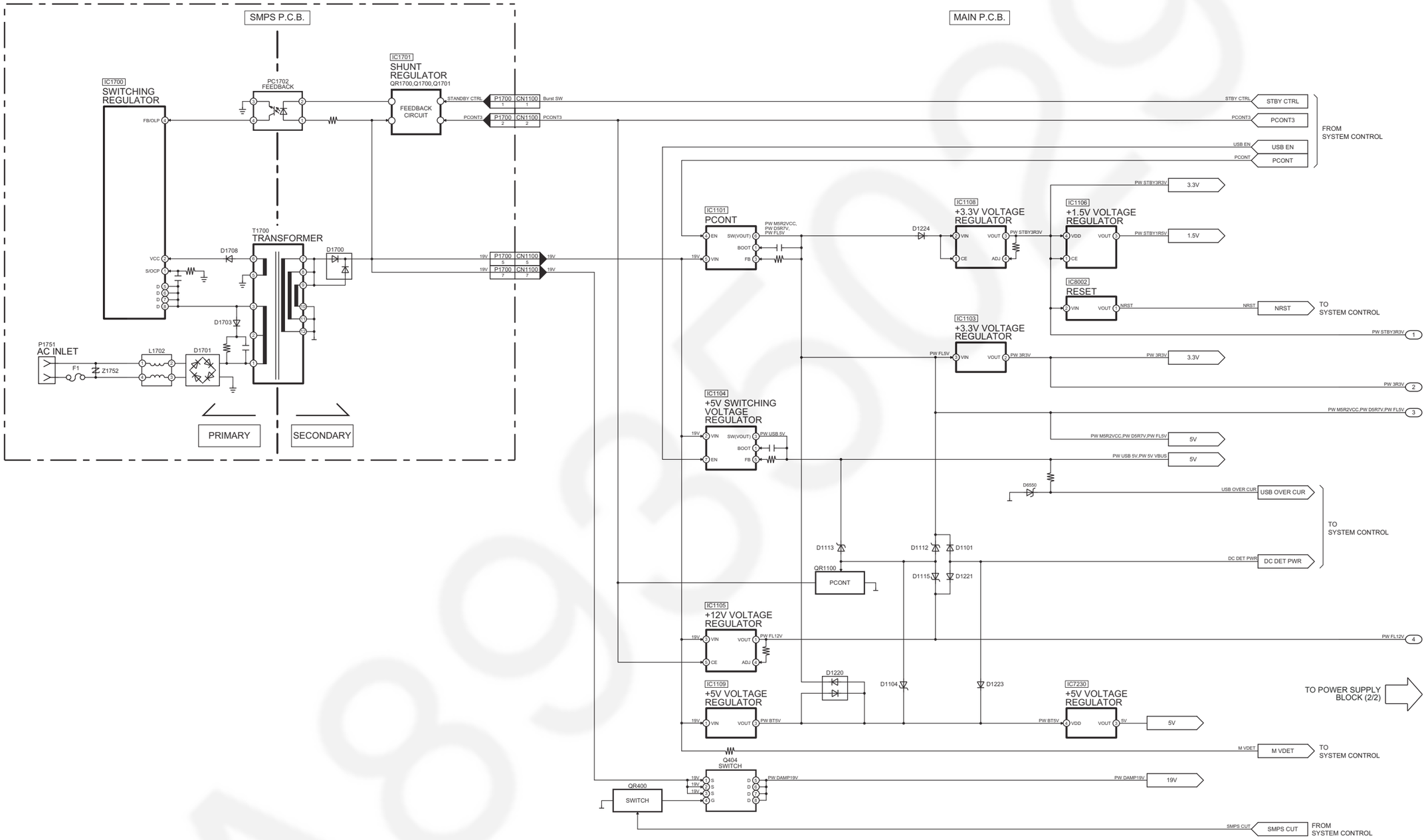

SC-HC395EG,SC-HC397EB/EG POWER SUPPLY (1/2) BLOCK DIAGRAM

10.5. POWER SUPPLY (2/2) BLOCK DIAGRAM

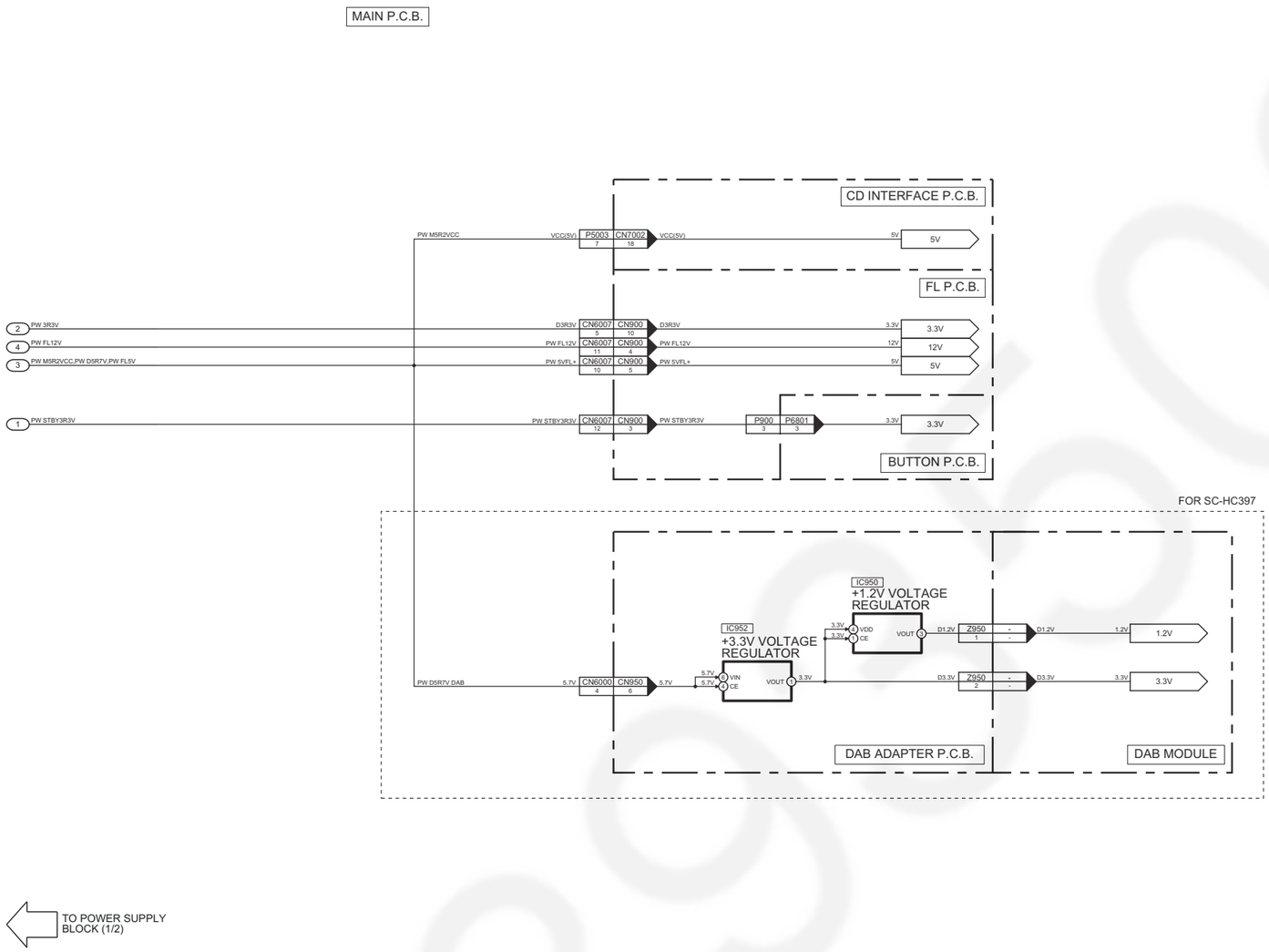

SC-HC395EG,SC-HC397EB/EG POWER SUPPLY (2/2) BLOCK DIAGRAM

11 Wiring Connection Diagram

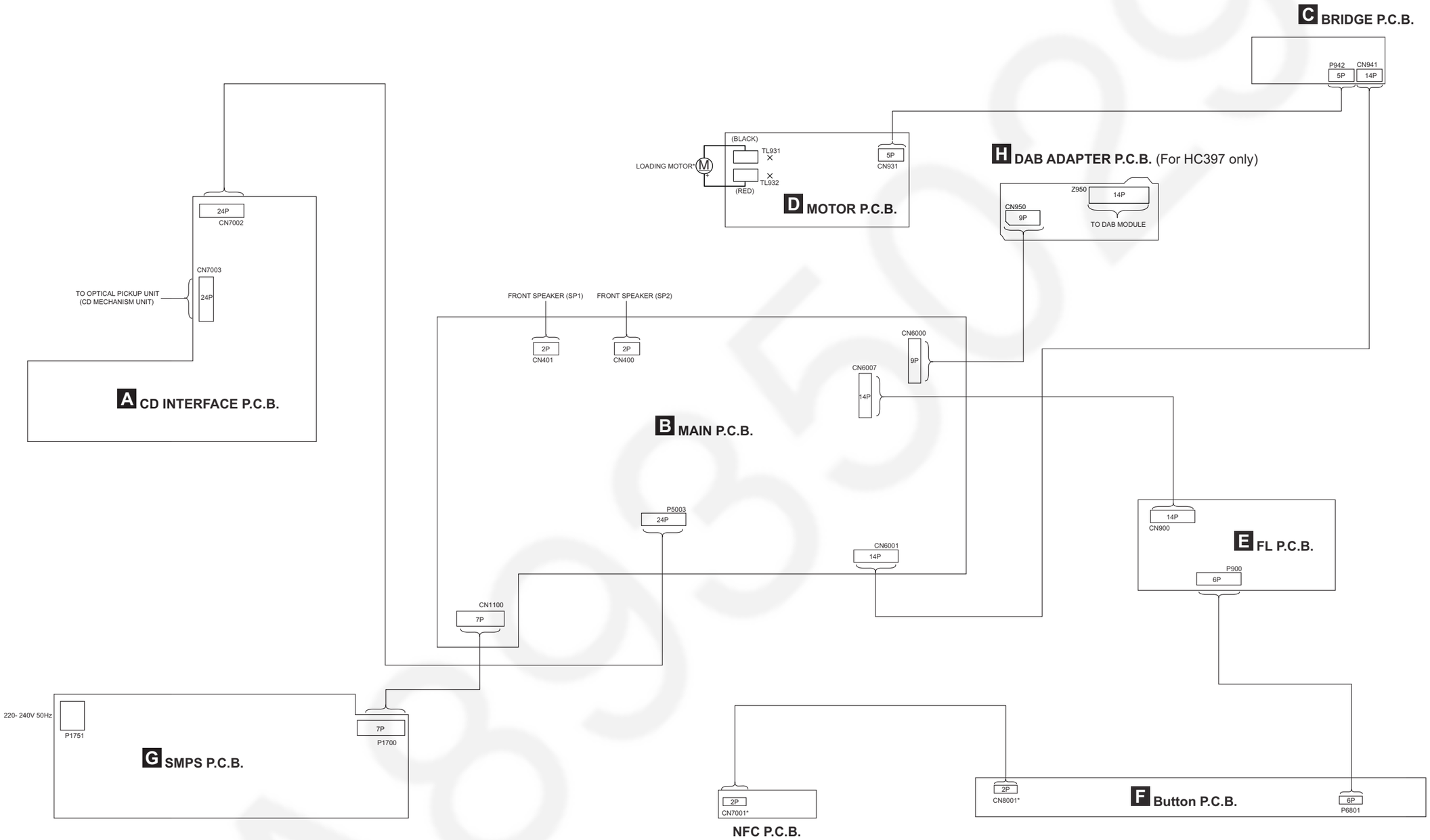

NOTE: " * " REF IS FOR INDICATION ONLY.
(NFC PCB and IC8004) and (NFC PCB and MAIN PCB) are supplied as a kit. For the details, refer to "Service Navigation".

SC-HC395EG, SC-HC397EB/EG
WIRING CONNECTION DIAGRAM

12 Schematic Diagram

12.1. Schematic Diagram Notes

(All schematic diagrams may be modified at any time with the development of new technology)

Notes:

S641:	OPEN switch.
S642:	CLOSE switch.
S901:	POWER switch (⏻/I).
S902:	SELECTOR switch.
S903:	STOP switch (■).
S904:	PLAY/PAUSE switch (▶/❚❚).
S905:	REV SKIP switch (⏮/◀◀).
S906:	FWD SKIP switch (▶▶/⏭).
S907:	VOL- switch.
S908:	VOL+ switch.
S909:	CD OPEN/CLOSE switch (CD ⏏).
S910:	BLUETOOTH PAIRING switch (✱).
S7201:	RESET switch.

- Important safety notice:

  Components identified by ⚠ mark have special characteristics important for safety.
  Furthermore, special parts which have purposes of fire-retardant (resistors), high quality sound (capacitors), low-noise (resistors), etc are used.
  When replacing any of components, be sure to use only manufacturer's specified parts shown in the parts list.

- In case of AC rated voltage Capacitors, the part no. and values will be indicated in the Schematic Diagram.
  AC rated voltage capacitors:
  C1702, C1710, C1725, C1727, C1728

- **Resistor**
  Unit of resistance is OHM [Ω] (K=1,000, M=1,000,000).

- **Capacitor**
  Unit of capacitance is μF, unless otherwise noted. F=Farads, pF=pico-Farad.

- **Coil**
  Unit of inductance is H, unless otherwise noted.

- *****
  REF IS FOR INDICATION ONLY.

- Voltage and signal line

  : +B Signal Line
  : -B Signal Line
  : CD Signal Line
  : Tuner/Aux Signal Line
  : Audio Signal Line
  : USB Signal Line
  : FM Signal Line

CAUTION: FOR CONTINUED PROTECTION AGAINST FIRE HAZARD, REPLACE ONLY WITH SAME TYPE F1 T2A, 250V FUSE

RISK OF FIRE-REPLACE FUSE AS MARKED.

FUSE CAUTION

These symbols located near the fuse indicates that the fuse used is a fast operating type. For continued protection against fire harzard, replace with the same type fuse. For fuse rating, refer to the marking adjacent to the symbol.

Ce symbole indique que le fusible utilisé est à rapide. Pour une protection permanente, n' utiliser que des fusibles de même type. Ce dernier est indiqué là qù le présent symbole est apposé.

A89350229

12.2. CD INTERFACE CIRCUIT

SCHEMATIC DIAGRAM - 1

A CD INTERFACE CIRCUIT

—— : +B SIGNAL LINE ▯▯▯▷ : CD SIGNAL LINE

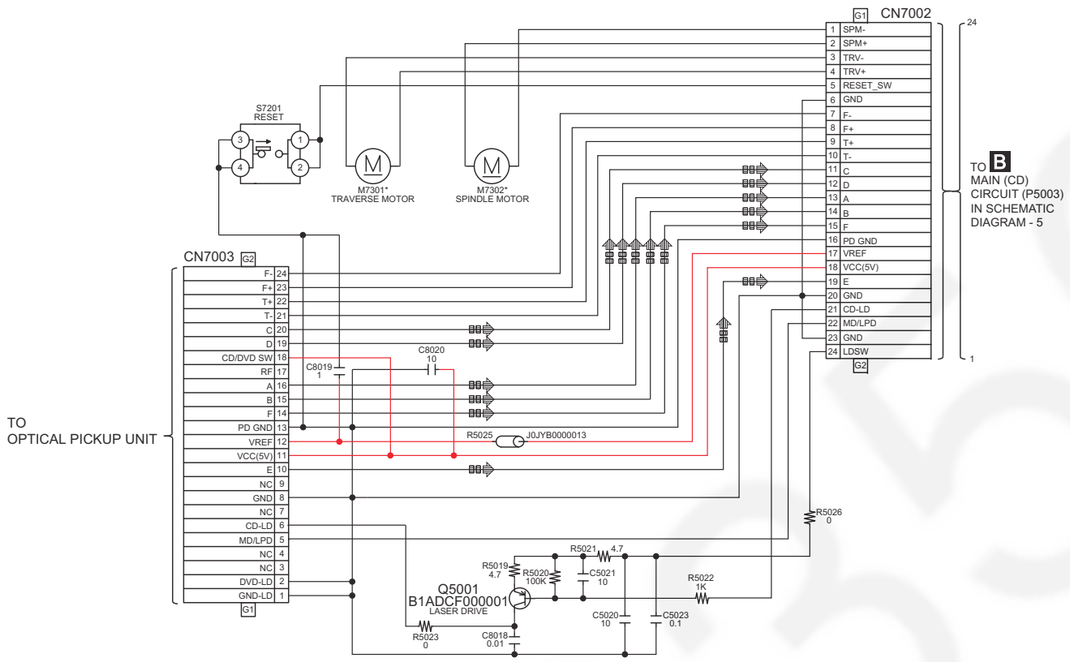

NOTE: " * " REF IS FOR INDICATION ONLY

SC-HC395EG, SC-HC397EB/EG CD INTERFACE CIRCUIT

12.3. MAIN (MICON) CIRCUIT (1/2)

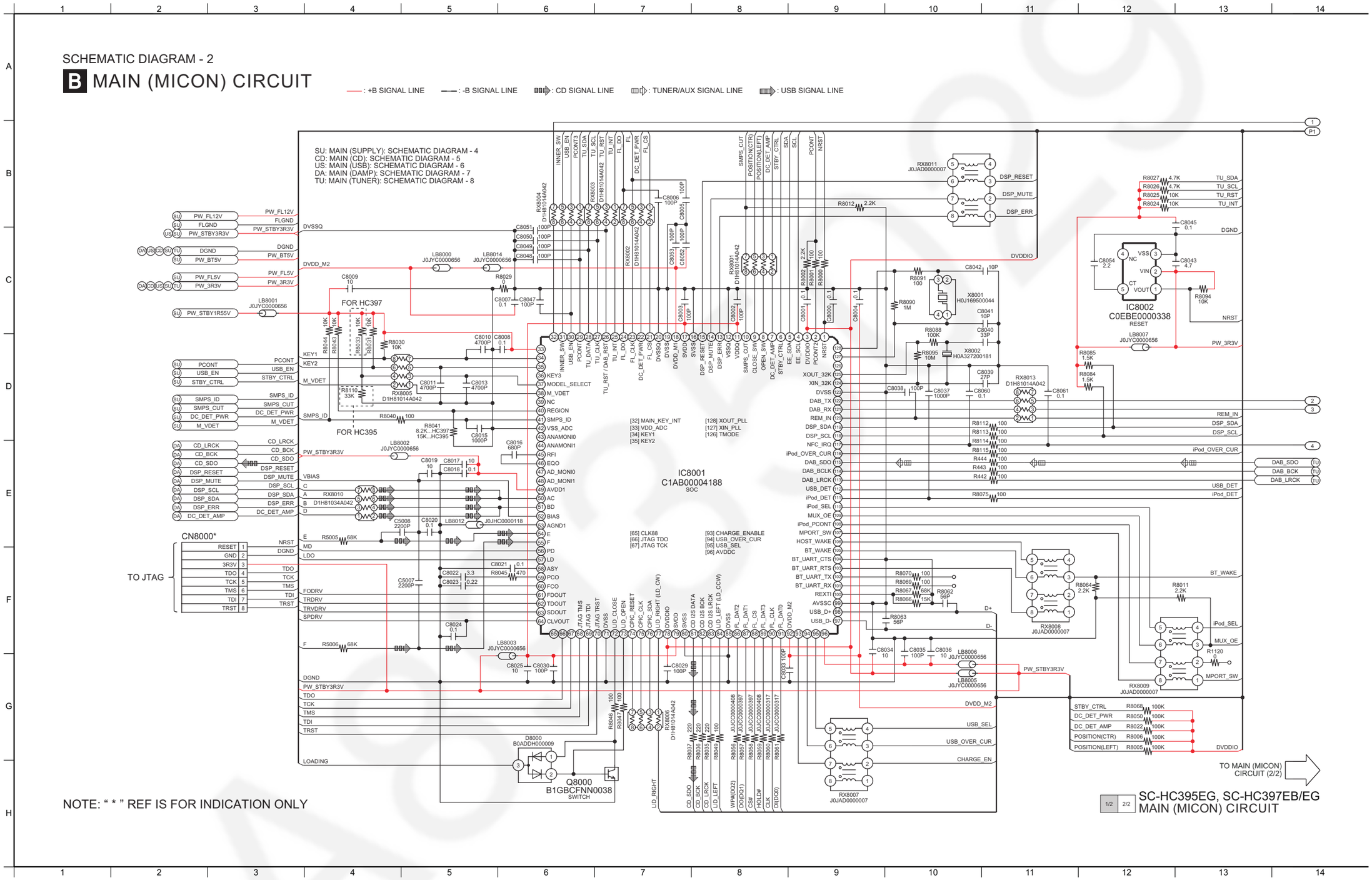

12.4. MAIN (MICON) CIRCUIT (2/2)

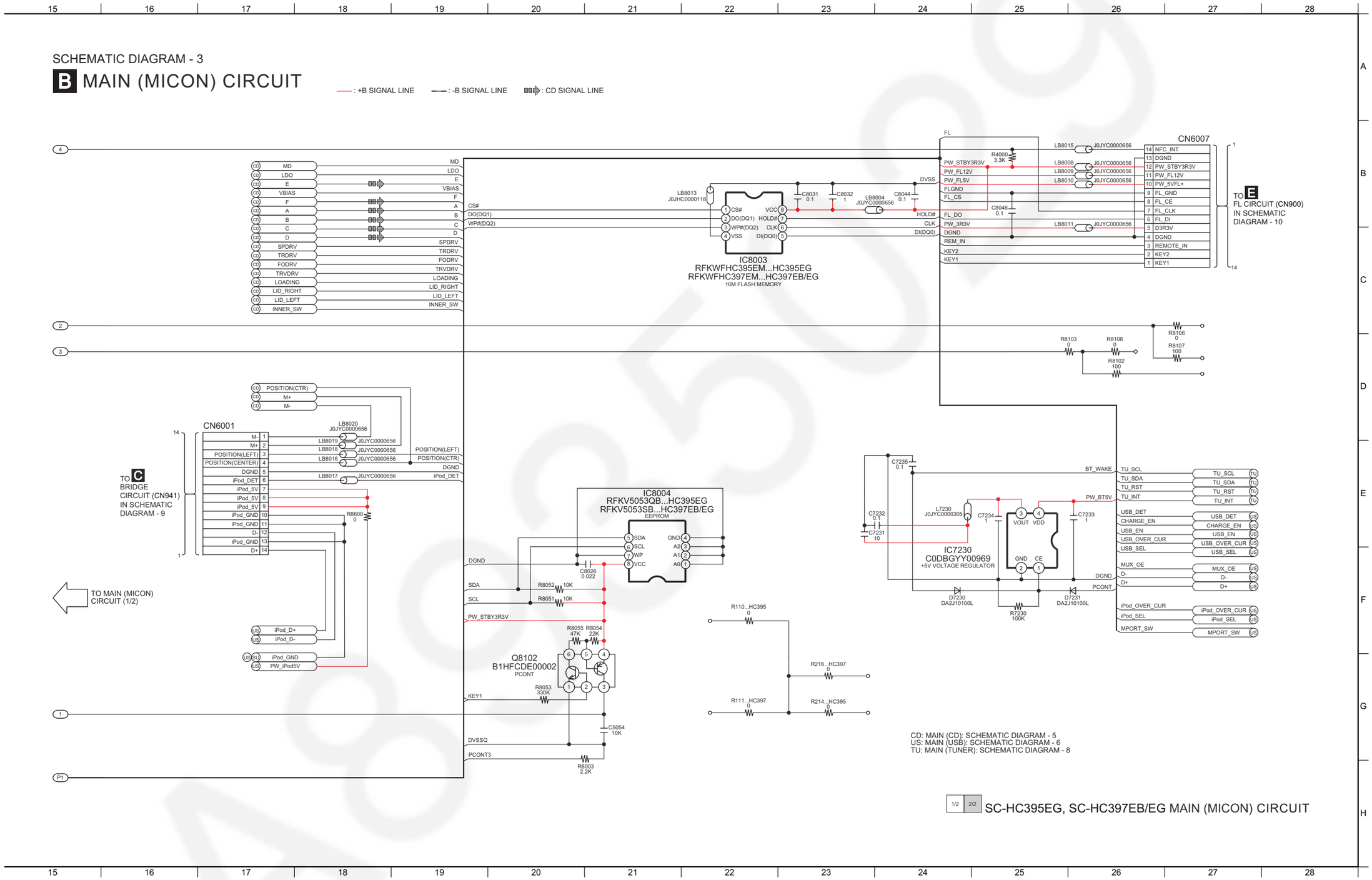

12.5. MAIN (SUPPLY) CIRCUIT

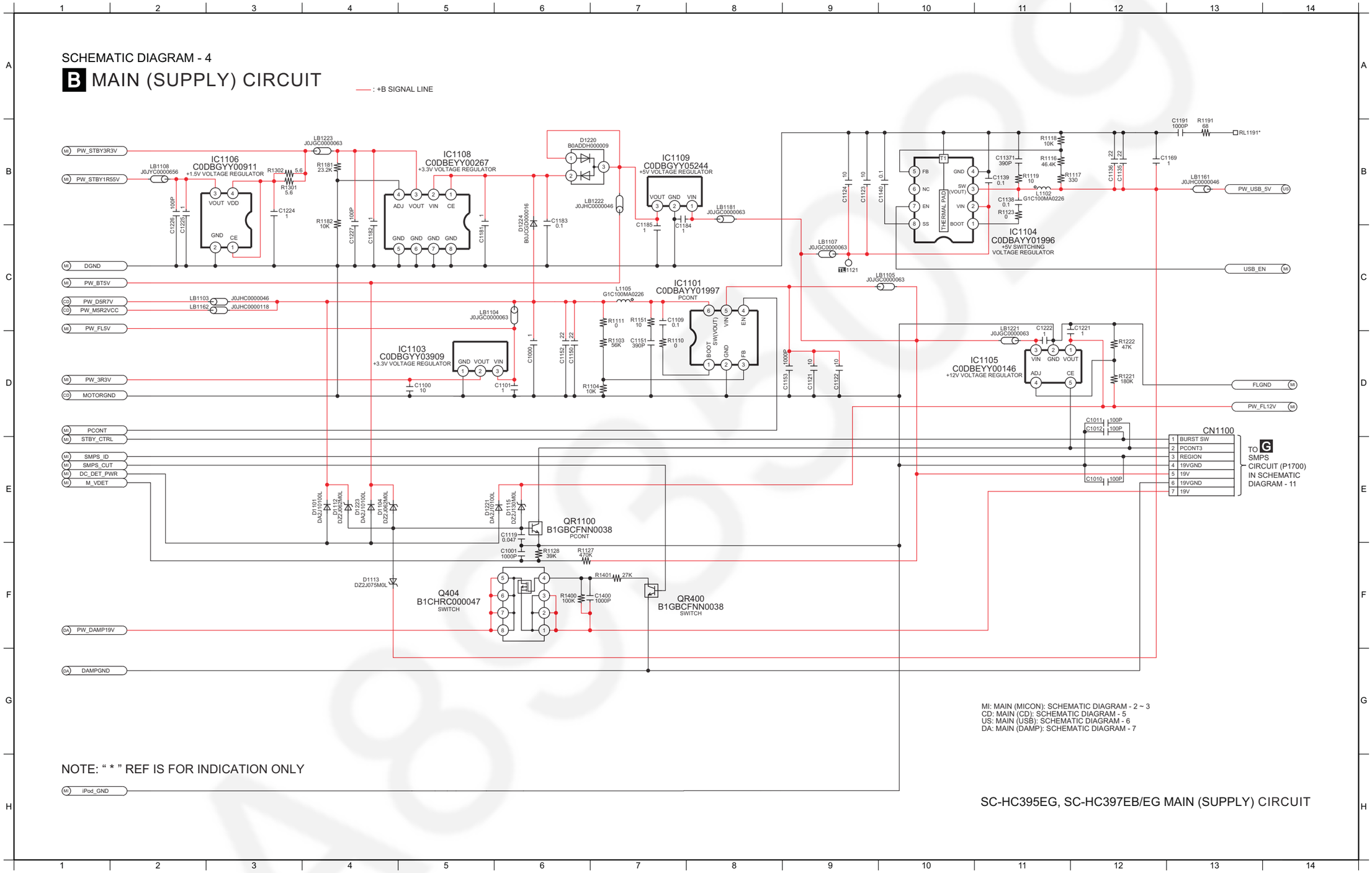

12.6. MAIN (CD) CIRCUIT

SCHEMATIC DIAGRAM - 5

B MAIN (CD) CIRCUIT

—— : +B SIGNAL LINE ▯▯▯ : CD SIGNAL LINE

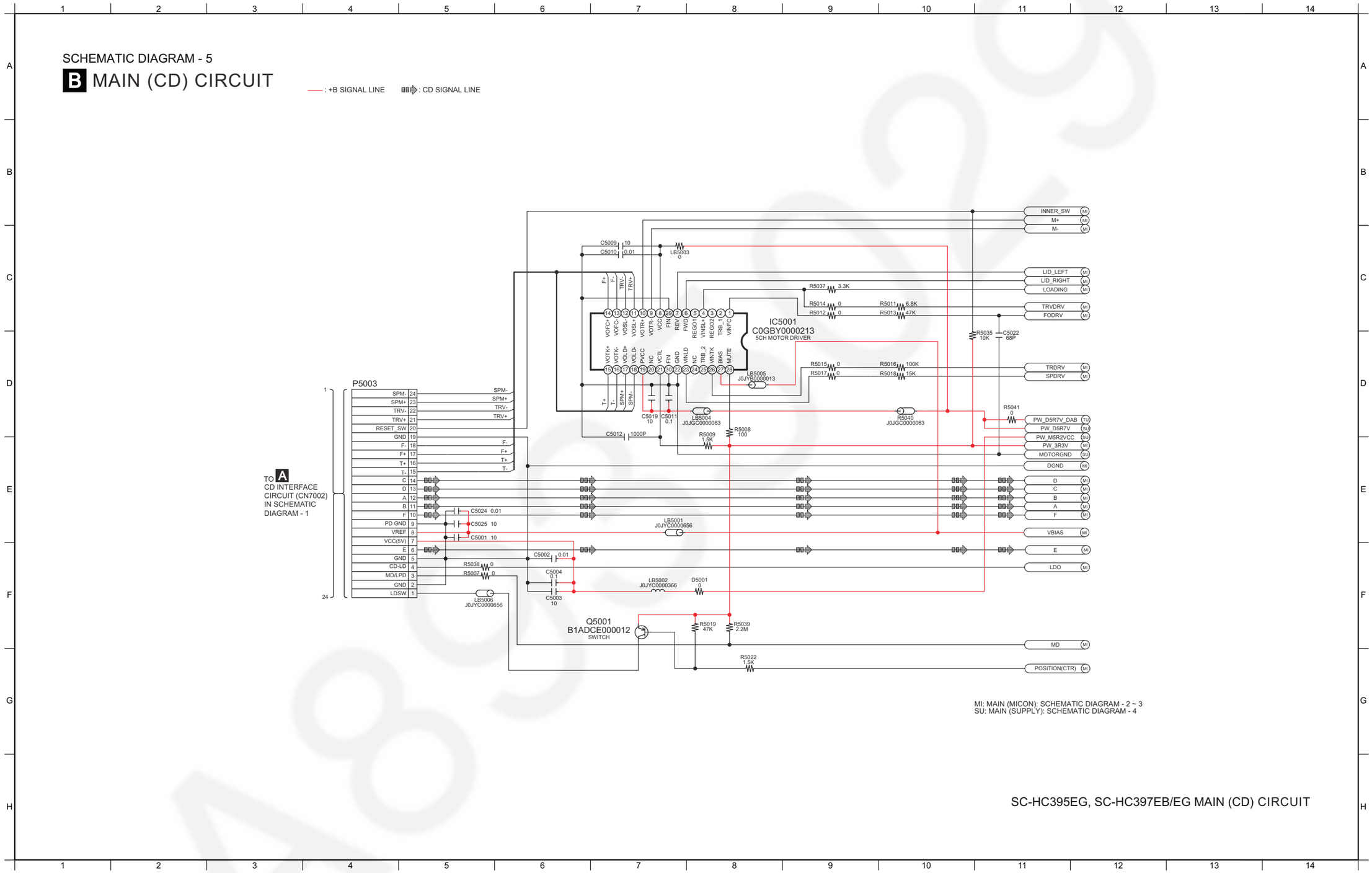

SC-HC395EG, SC-HC397EB/EG MAIN (CD) CIRCUIT

12.7. MAIN (USB) CIRCUIT

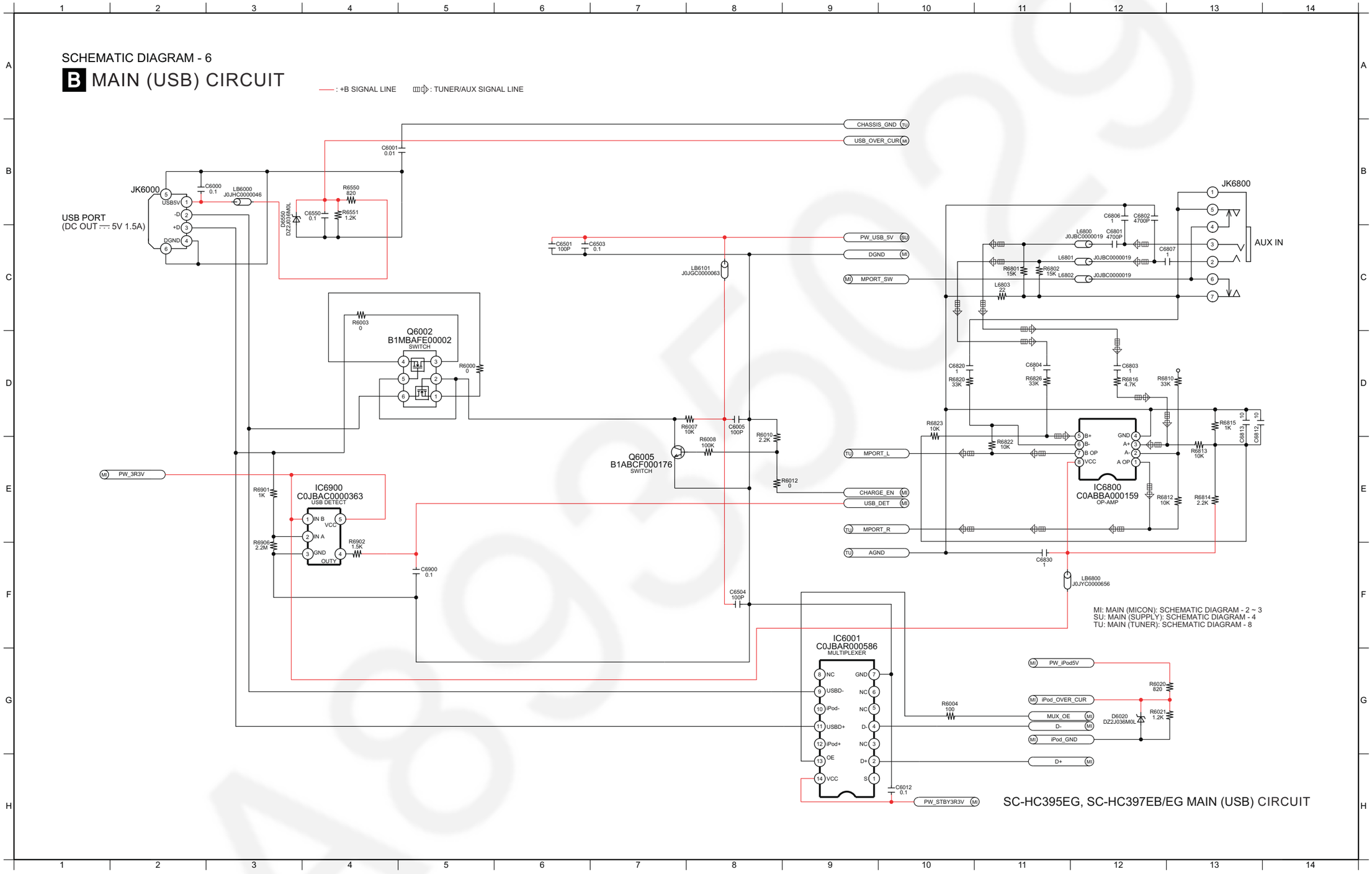

12.8. MAIN (DAMP) CIRCUIT

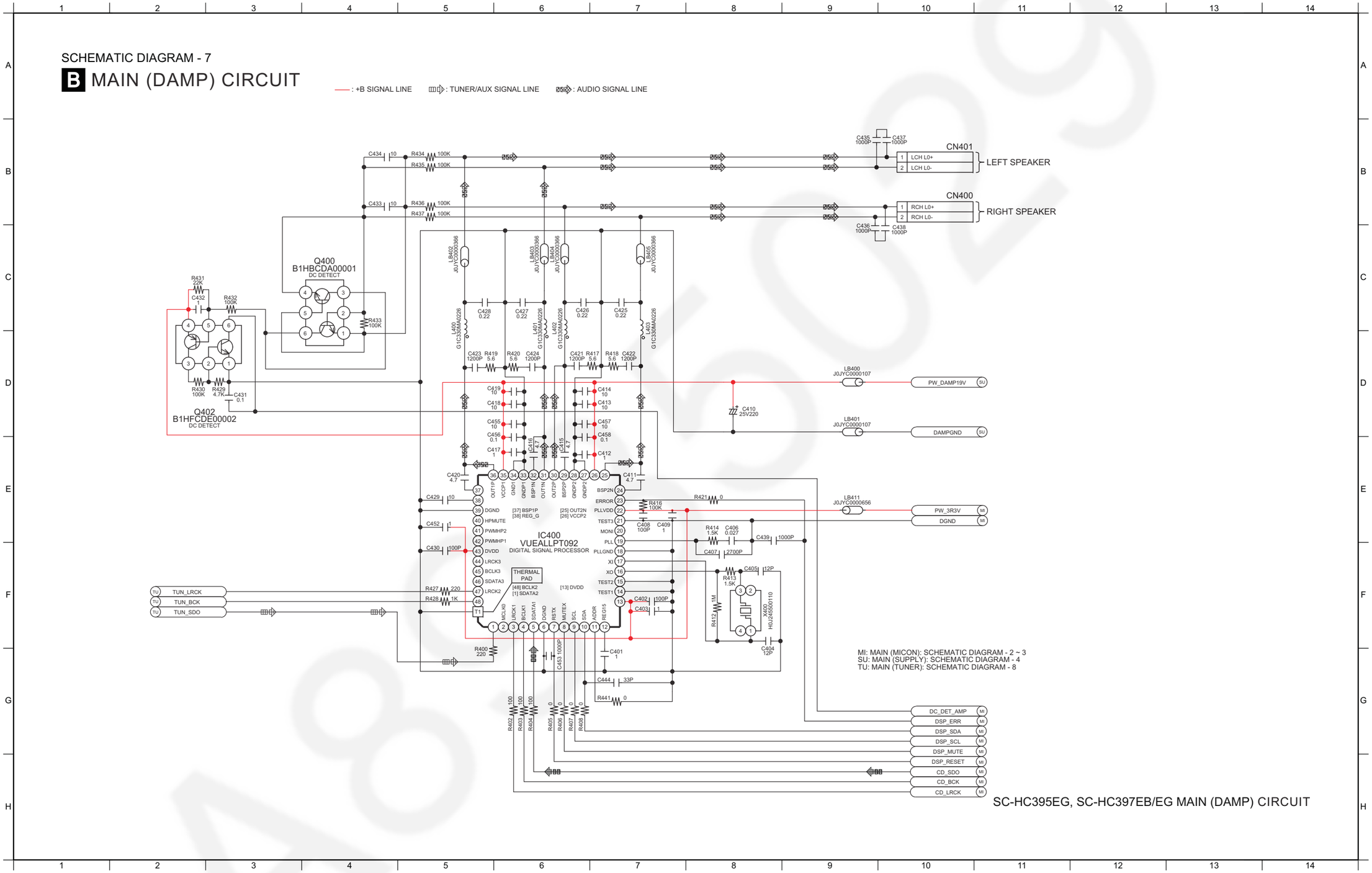

12.9. MAIN (TUNER) CIRCUIT

SCHEMATIC DIAGRAM - 8

B MAIN (TUNER) CIRCUIT

—— : +B SIGNAL LINE ▭⇨ : FM SIGNAL LINE ▥⇨ : TUNER/AUX SIGNAL LINE

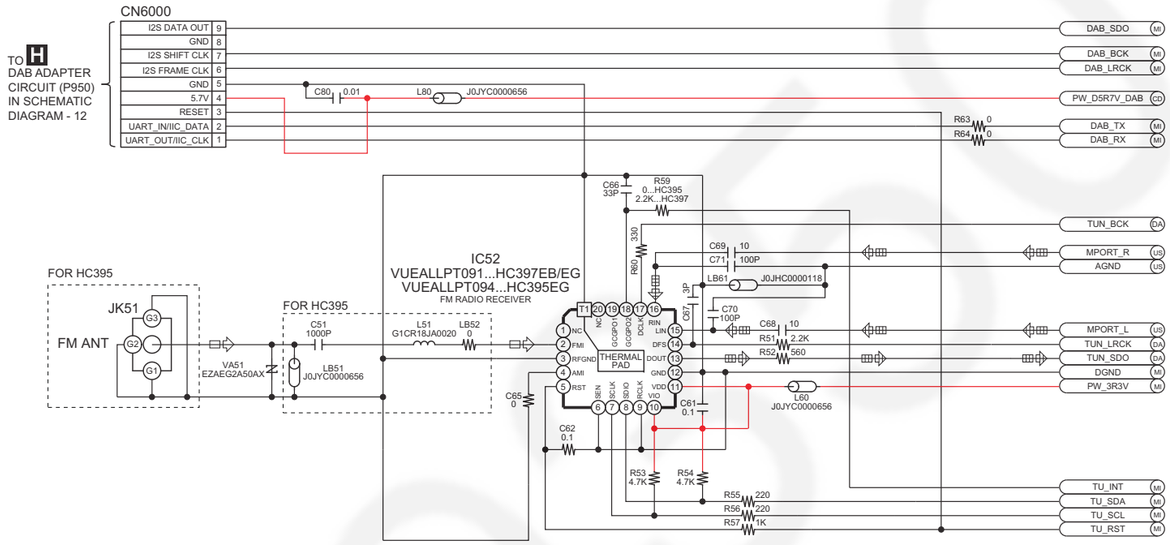

MI: MAIN (MICON): SCHEMATIC DIAGRAM - 2 ~ 3
SU: MAIN (SUPPLY): SCHEMATIC DIAGRAM - 4
US: MAIN (USB): SCHEMATIC DIAGRAM - 6

SC-HC395EG, SC-HC397EB/EG MAIN (TUNER) CIRCUIT

12.10. BRIDGE, MOTOR & BUTTON CIRCUIT

SCHEMATIC DIAGRAM - 9

C BRIDGE CIRCUIT

—— : +B SIGNAL LINE

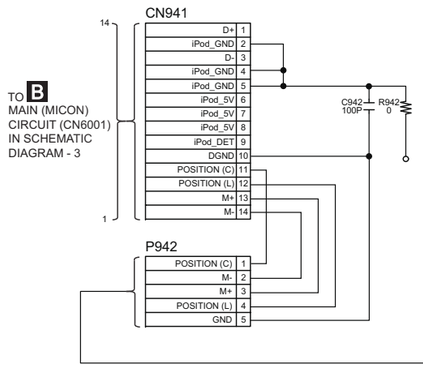

D MOTOR CIRCUIT

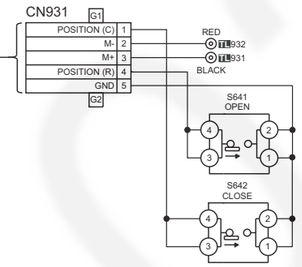

F BUTTON CIRCUIT

—— : +B SIGNAL LINE

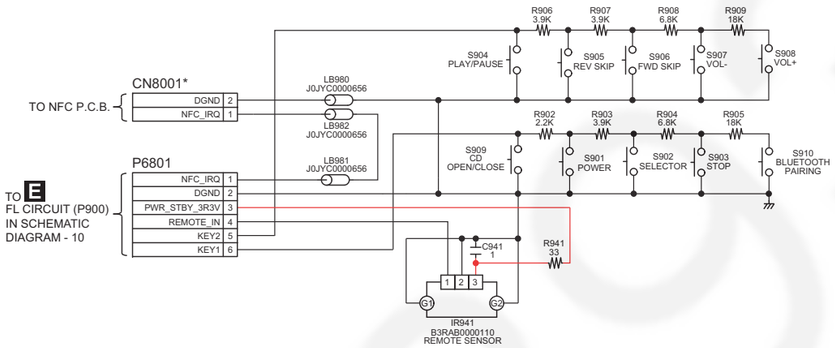

NOTE: " * " REF IS FOR INDICATION ONLY

SC-HC395EG, SC-HC397EB/EG BRIDGE / MOTOR / BUTTON CIRCUIT

12.11. FL CIRCUIT

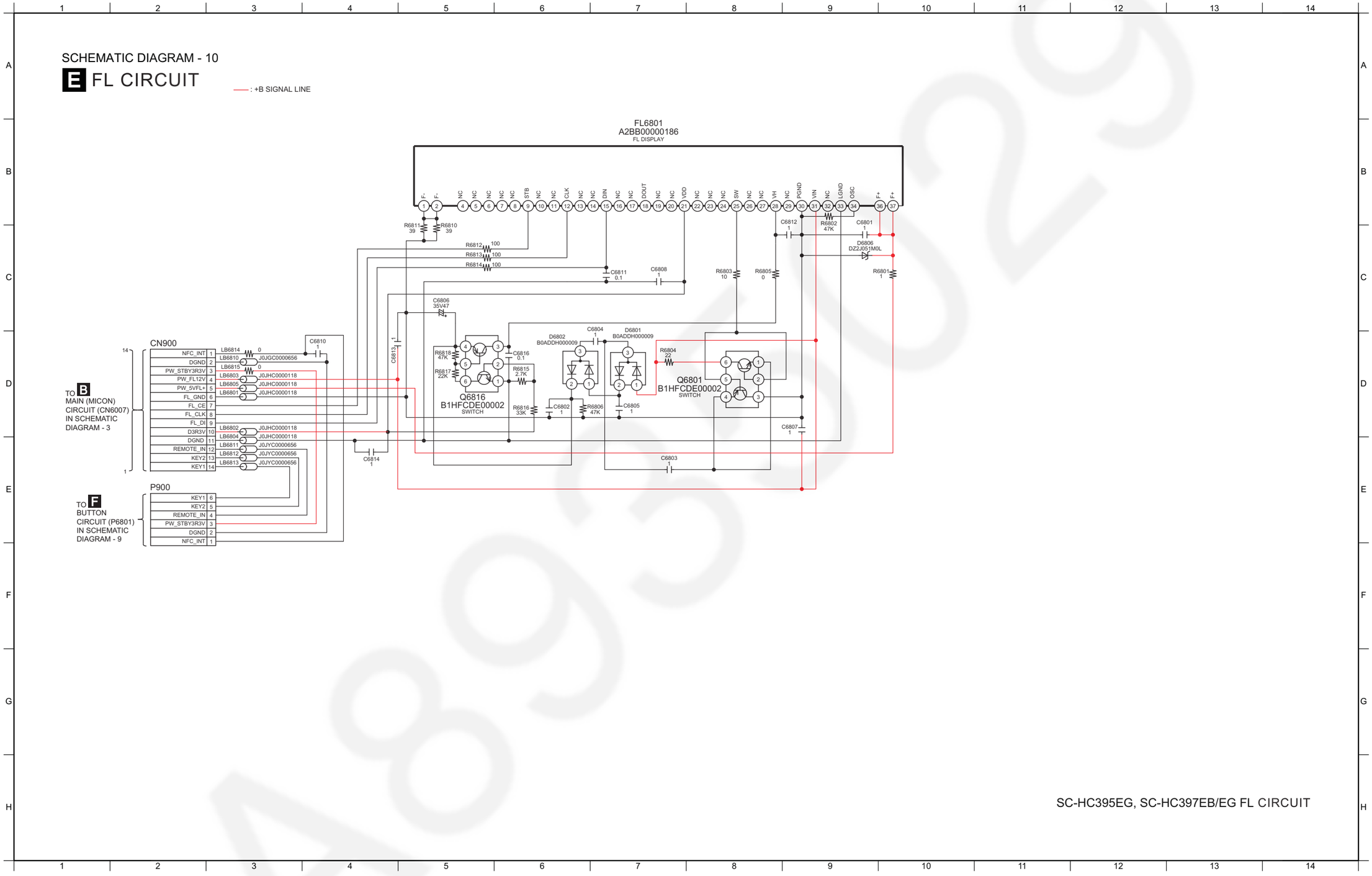

12.12. SMPS CIRCUIT

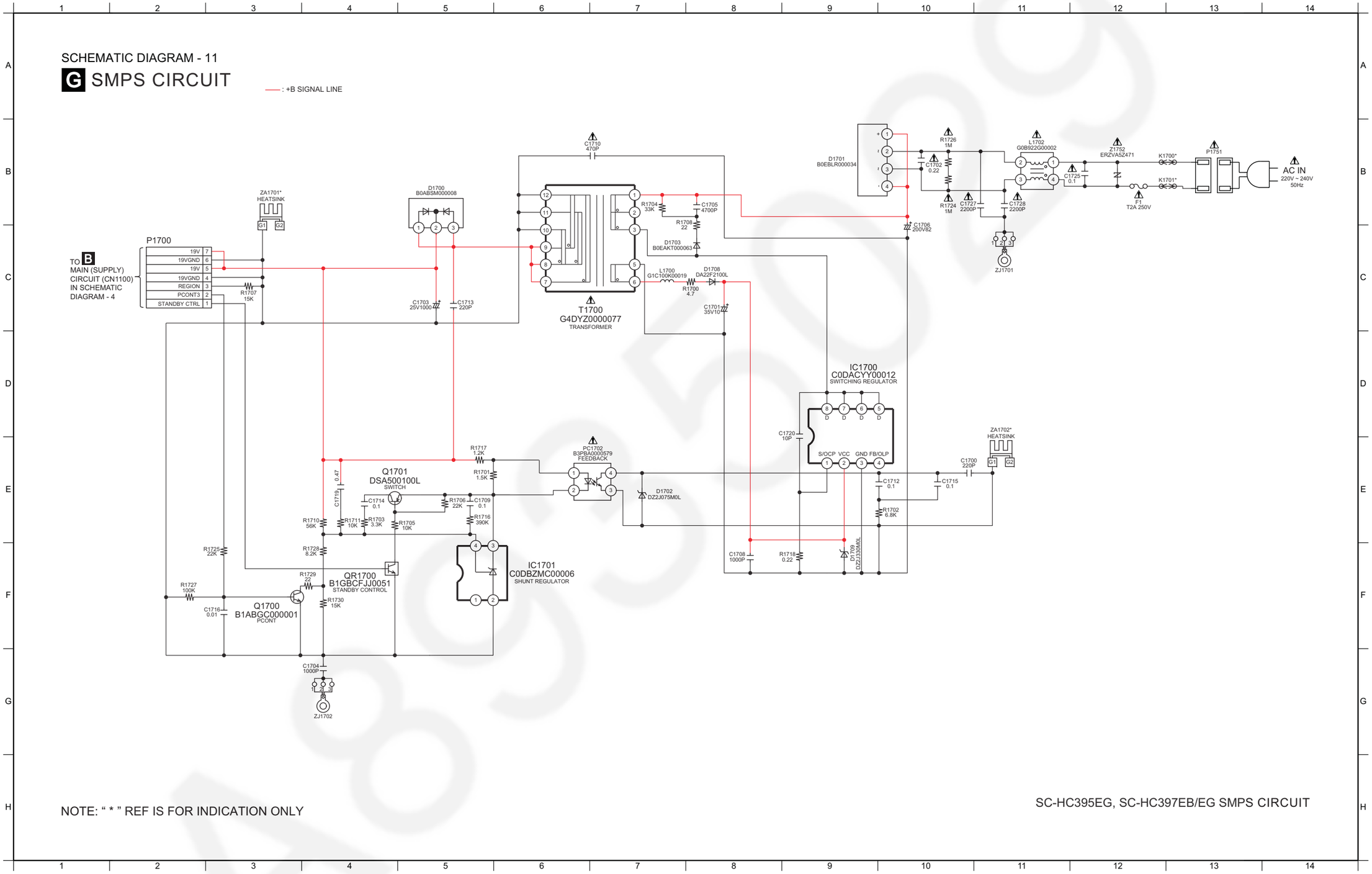

NOTE: " * " REF IS FOR INDICATION ONLY

SC-HC395EG, SC-HC397EB/EG SMPS CIRCUIT

12.13. DAB ADAPTER CIRCUIT (For HC397)

SCHEMATIC DIAGRAM - 12

H DAB ADAPTER CIRCUIT

—— : +B SIGNAL LINE ⊞ : TUNER/AUX SIGNAL LINE

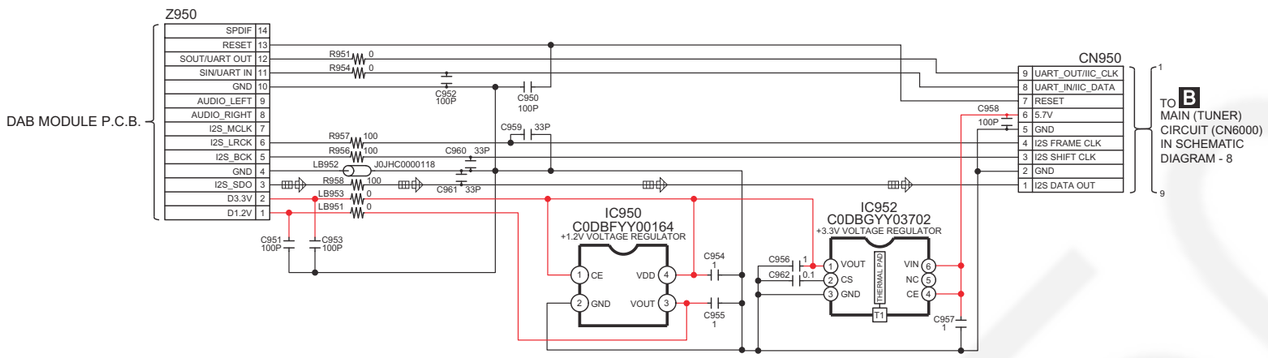

SC-HC397EB/EG DAB ADAPTER CIRCUIT

A8933029

13 Printed Circuit Board

13.1. CD INTERFACE & BRIDGE P.C.B.

A CD INTERFACE P.C.B. (REP5057A)

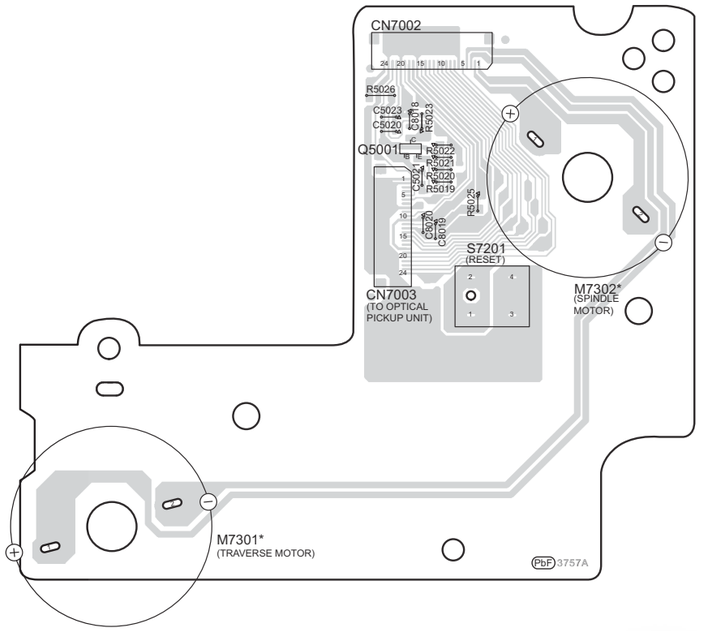

C BRIDGE P.C.B. (REP5053QC...HC395EG)
(REP5053SC...HC397EB/EG)

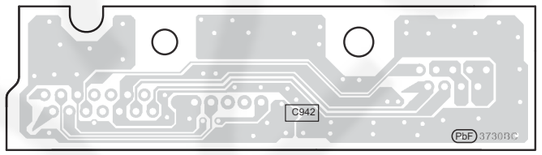

(SIDE A)

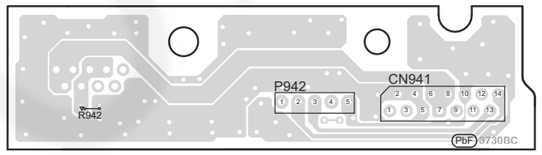

(SIDE B)

NOTE: " * " REF IS FOR INDICATION ONLY

SC-HC395EG,SC-HC397EB/EG
CD INTERFACE / BRIDGE P.C.B.

13.2. MAIN P.C.B. (Side A)

B MAIN P.C.B. (RFKV5053QA...HC395EG)
(RFKV5053SA...HC397EB/EG)

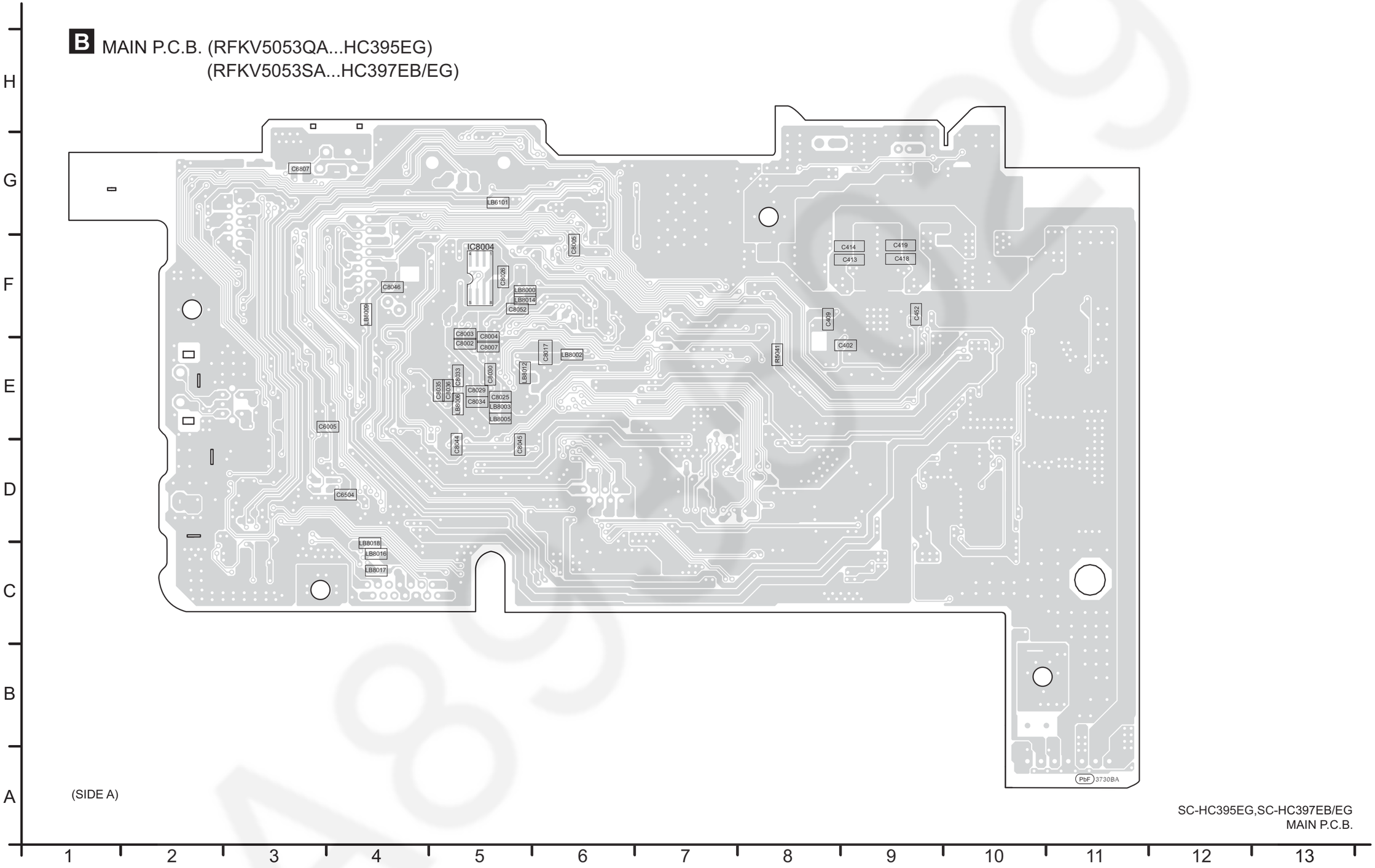

(SIDE A)

SC-HC395EG,SC-HC397EB/EG
MAIN P.C.B.

13.3. MAIN P.C.B. (Side B)

B MAIN P.C.B. (RFKV5053QA...HC395EG)
(RFKV5053SA...HC397EB/EG)

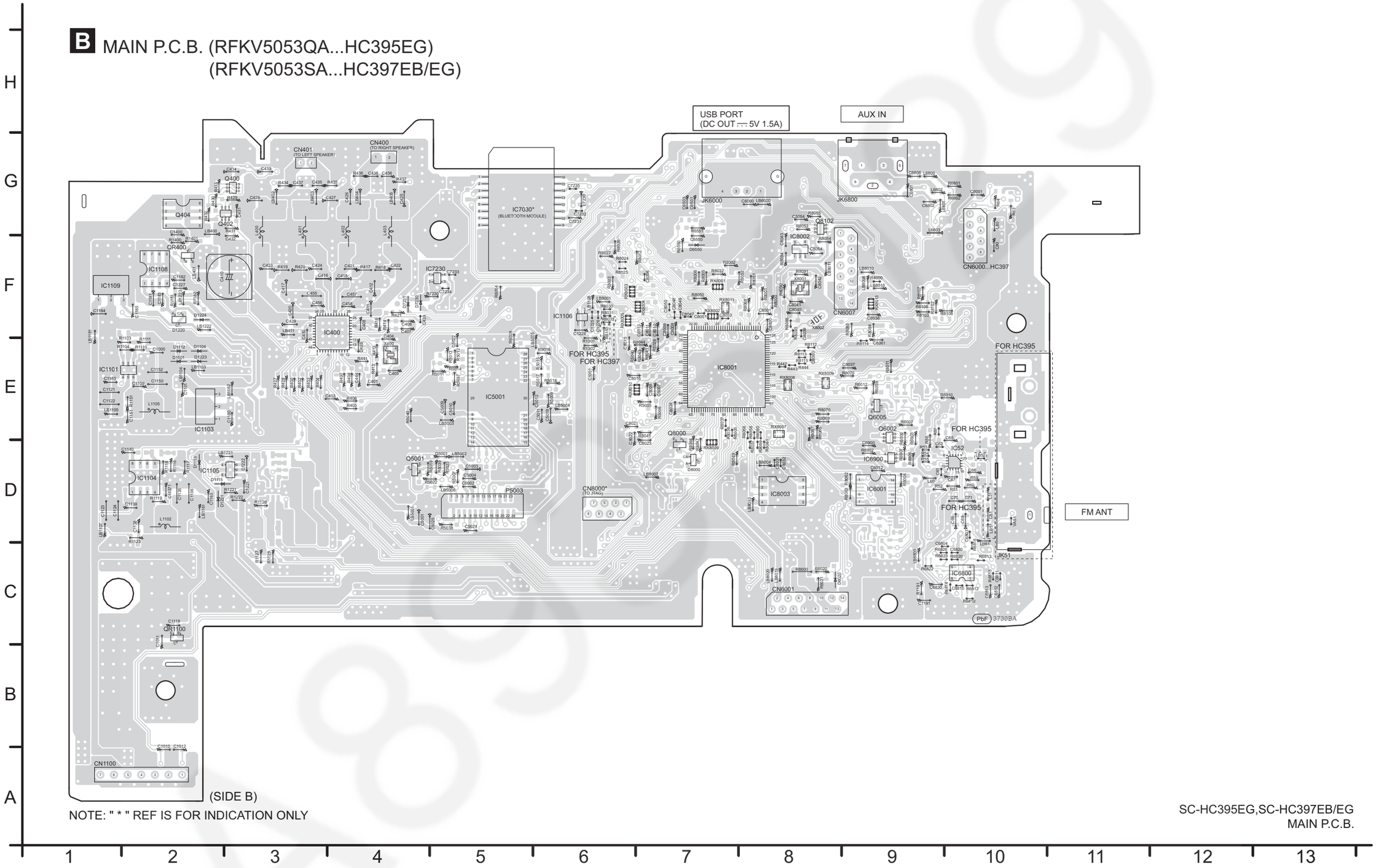

NOTE: " * " REF IS FOR INDICATION ONLY

SC-HC395EG,SC-HC397EB/EG
MAIN P.C.B.

13.4. MOTOR, FL & BUTTON P.C.B.

D MOTOR P.C.B. (REP5053QF...HC395EG)
(REP5053SF...HC397EB/EG)

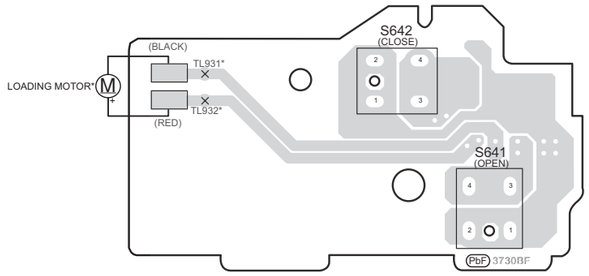

(SIDE A)

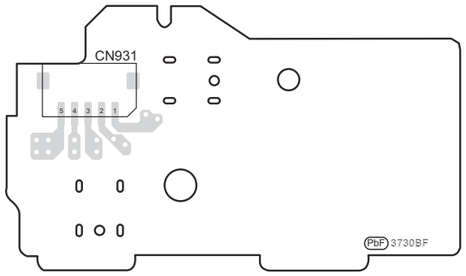

(SIDE B)

E FL P.C.B. (REP5054FB)

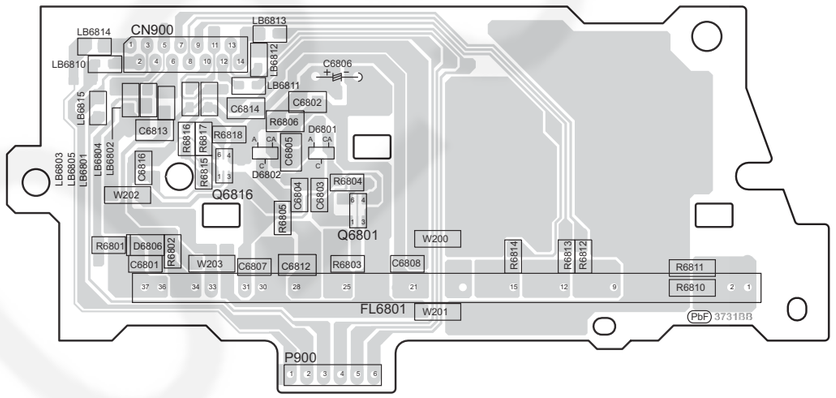

F BUTTON P.C.B. (REP5054FC)

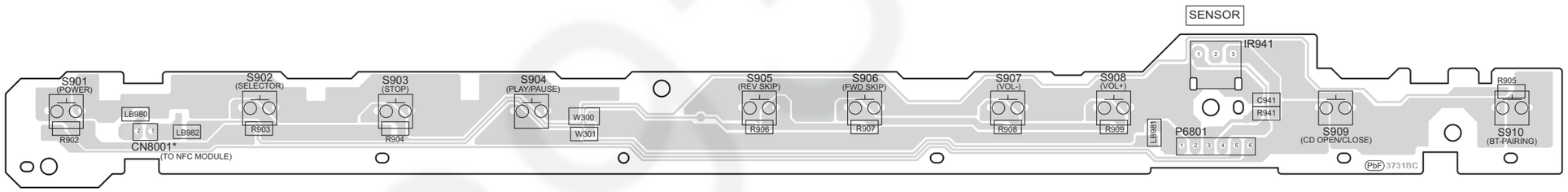

NOTE: " * " REF IS FOR INDICATION ONLY

SC-HC395EG,SC-HC397EB/EG
MOTOR / FL / BUTTON P.C.B.

13.5. SMPS P.C.B. & DAB ADAPTER P.C.B. (For HC397)

G SMPS P.C.B. (REP5054FA)

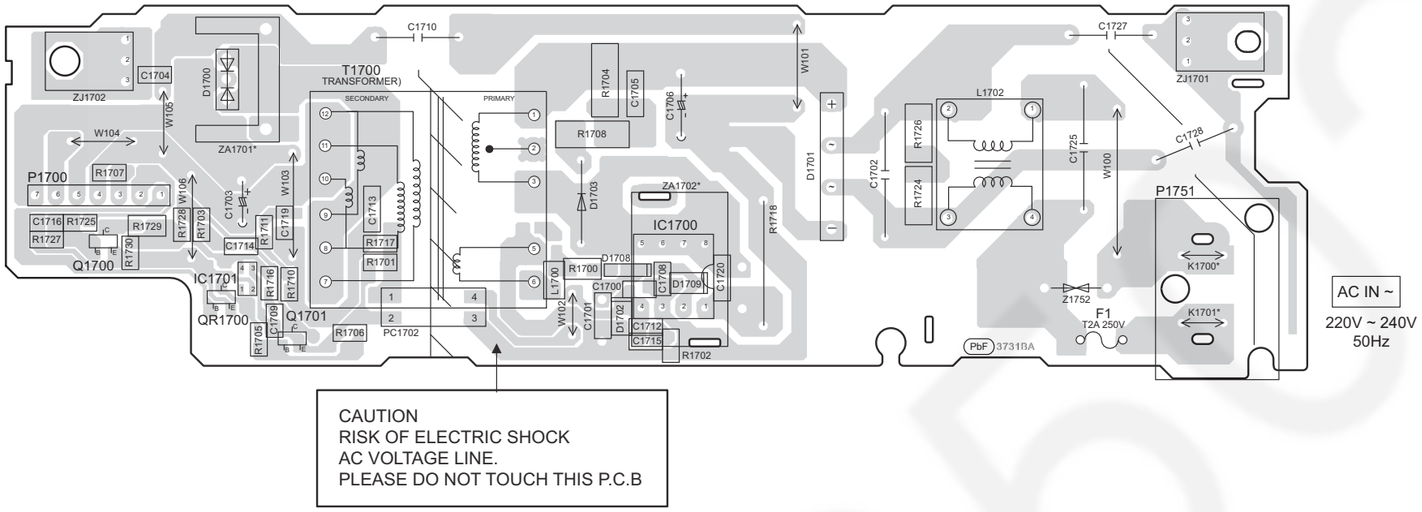

CAUTION
RISK OF ELECTRIC SHOCK
AC VOLTAGE LINE.
PLEASE DO NOT TOUCH THIS P.C.B

H DAB ADAPTER P.C.B. (REP5053SD...SC-HC397)

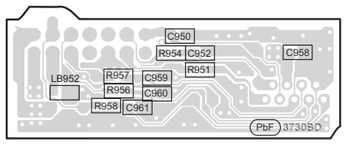

(SIDE A)

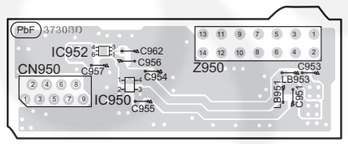

(SIDE B)

NOTE: " * " REF IS FOR INDICATION ONLY

SC-HC395EG,SC-HC397EB/EG
SMPS / DAB ADAPTER P.C.B.

A8gs5029

14 Appendix Information of Schematic Diagram

14.1. Voltage Measurement

Note:

- Indicated voltage values are the standard values for the unit measured by the DC electronic circuit tester (high-impedance) with the chassis taken as standard.
  Therefore, there may exist some errors in the voltage values, depending on the internal impedance of the DC circuit tester.
- Circuit voltage and waveform described herein shall be regarded as reference information when probing defect point because it may differ from actual measuring value due to difference of Measuring instrument and its measuring condition and product itself.

14.1.1. CD INTERFACE, FL, SMPS & DAB ADAPTER (For HC397) P.C.B.

REF NO.	Q5001																			
MODE	E	C	B																	
CD PLAY	2.8	1.9	2.1																	
STANDBY	3.3	0	3.3																	

SC-HC397EB/EG, SC-HC395EG CD INTERFACE P.C.B.

REF NO.	Q6801							Q6816												
MODE	1	2	3	4	5	6		1	2	3	4	5	6							
POWER ON	6.1	6.2	0	6.1	6.2	12		0	0.7	28.2	28.2	27.5	0							
STANDBY	6.1	6.2	0	6.1	6.2	12		0	0.7	28.2	28.2	27.5	0							

SC-HC397EB/EG, SC-HC395EG FL P.C.B.

REF NO.	IC1700																			
MODE	1	2	3	4	5	6	7	8												
POWER ON	0	25.8	0	1.1	300	300	300	300												

REF NO.	IC1701																			
MODE	1	2	3	4																
POWER ON	0	0	17.3	2.5																

REF NO.	Q1700				Q1701				QR1700											
MODE	E	C	B		E	C	B		E	C	B									
POWER ON	0	0	0.6		0	0	17.2		0	17.2	0									

SC-HC397EB/EG, SC-HC395EG SMPS P.C.B.

REF NO.	IC950																			
MODE	1	2	3	4																
POWER ON	3.3	0	1.2	3.3																

REF NO.	IC952																			
MODE	1	2	3	4	5	6														
POWER ON	3.3	2.2	0	5.3	0	5.3														

SC-HC397EB/EG DAB ADAPTER P.C.B.

14.1.2. MAIN P.C.B. (1/3)

REF NO.	IC400																			
MODE	1	2	3	4	5	6	7	8	9	10	11	12	13	14	15	16	17	18	19	20
CD PLAY	3.3	0	0	1.7	1.7	0	3.3	3.3	3.3	3.3	0	1.5	3.3	0	0	1.4	1.4	0	1	3.3
STANDBY	3.3	0	0	1.7	1.7	0	3.3	3.3	3.3	3.3	0	1.5	3.3	0	0	1.4	1.4	0	1	3.3

REF NO.	IC400																			
MODE	21	22	23	24	25	26	27	28	29	30	31	32	33	34	35	36	37	38	39	40
AUX IN	0	3.3	1	5.3	9.8	19.4	0	0	14.5	0	5.3	0	0	0	19.4	9.8	5.3	5.8	0	1.7
STANDBY	0	3.3	1	5.3	9.8	19.4	0	0	14.5	0	5.3	0	0	0	19.4	9.8	5.3	5.8	0	1.7

REF NO.	IC400																			
MODE	41	42	43	44	45	46	47	48												
CD PLAY	0	0	3.3	0	0	0	0	0												
STANDBY	0	0	3.3	0	0	0	0	0												

REF NO.	IC1101																			
MODE	1	2	3	4	5	6														
CD PLAY	9.8	0	0.8	3.3	19.4	5.0														
STANDBY	9.8	0	0.8	3.3	19.4	5.0														

REF NO.	IC1103																			
MODE	1	2	3																	
CD PLAY	0	3.3	5.3																	
STANDBY	0	3.3	5.3																	

REF NO.	IC1104																			
MODE	1	2	3	4	5	6	7	8												
CD PLAY	10.1	19.4	5.1	0	0.9	0	3.3	0												
STANDBY	10.1	19.4	5.1	0	0.9	0	3.3	0												

REF NO.	IC1105																			
MODE	1	2	3	4	5															
CD PLAY	12.3	0	19.4	2.5	3.3															
STANDBY	12.3	0	19.4	2.5	3.3															

REF NO.	IC1106																			
MODE	1	2	3	4																
CD PLAY	3	0	1.6	3																
STANDBY	3	0	1.6	3																

REF NO.	IC1108																			
MODE	1	2	3	4	5	6	7	8												
CD PLAY	5.1	5.1	3.3	1	0	0	0	0												
STANDBY	5.1	5.1	3.3	1	0	0	0	0												

REF NO.	IC1109																			
MODE	1	2	3																	
POWER	19.4	0	5																	
STANDBY	19.4	0	5																	

SC-HC397EB/EG, SC-HC395EG MAIN P.C.B.

14.1.3. MAIN P.C.B. (2/3)

REF NO.	IC5001																			
MODE	1	2	3	4	5	6	7	8	9	10	11	12	13	14	15	16	17	18	19	20
POWER	1.6	5.3	0	1.6	0	0	0	5.3	0	0	2.7	2.7	2.8	2.8	2.8	2.8	2.8	2.8	5.3	0.1
STANDBY	1.6	5.3	0	1.6	0	0	0	5.3	0	0	2.7	2.7	2.8	2.8	2.8	2.8	2.8	2.8	5.3	0.1

REF NO.	IC5001																			
MODE	21	22	23	24	25	26	27	28	29	30										
POWER	3.3	0	1.6	5.3	5.3	1.6	1.6	3.3	0	0										
STANDBY	3.3	0	1.6	5.3	5.3	1.6	1.6	3.3	0	0										

REF NO.	IC6001																			
MODE	1	2	3	4	5	6	7	8	9	10	11	12	13	14						
USB PLAY	3.0	0	0	0	0	0	0	0	2.1	0	2.9	0	3.3	3.3						
STANDBY	3.0	0	0	0	0	0	0	0	2.1	0	2.9	0	3.3	3.3						

REF NO.	IC6800																			
MODE	1	2	3	4	5	6	7	8												
CD PLAY	1.1	1.1	1.1	0	1.1	1.1	1.1	3.3												
STANDBY	1.1	1.1	1.1	0	1.1	1.1	1.1	3.3												

REF NO.	IC6900																			
MODE	1	2	3	4	5															
CD PLAY	3.3	0	0	3.3	3.3															
STANDBY	3.3	0	0	3.3	3.3															

REF NO.	IC7230																			
MODE	1	2	3	4																
POWER	2.7	0	4.6	5.1																
STANDBY	2.7	0	4.6	5.1																

REF NO.	IC8001																			
MODE	1	2	3	4	5	6	7	8	9	10	11	12	13	14	15	16	17	18	19	20
CD PLAY	3.3	3.3	3.3	3.3	3.3	0	3.3	3.3	0	3.3	3.3	0	3.3	3.3	3.3	0	3.3	0	0	0
STANDBY	3.3	3.3	3.3	3.3	3.3	0	3.3	3.3	0	3.3	3.3	0	3.3	3.3	3.3	0	3.3	0	0	0

REF NO.	IC8001																			
MODE	21	22	23	24	25	26	27	28	29	30	31	32	33	34	35	36	37	38	39	40
CD PLAY	0.6	3	0.1	1.4	3.3	3.3	3.3	3.3	3.3	3.3	3.3	3.2	1.6	1.5	1.6	0	0.7	1.5	0	0.9
STANDBY	0.6	3	0.1	1.4	3.3	3.3	3.3	3.3	3.3	3.3	3.3	3.2	1.6	1.5	1.6	0	0.7	1.5	0	0.9

REF NO.	IC8001																			
MODE	41	42	43	44	45	46	47	48	49	50	51	52	53	54	55	56	57	58	59	60
CD PLAY	0.4	0	3.3	3.3	1.1	1	3.3	3.3	3.3	1.6	1.6	1.6	0	1.6	1.6	2.4	1.7	0	0.5	0.8
STANDBY	0.4	0	3.3	3.3	1.1	1	3.3	3.3	3.3	1.6	1.6	1.6	0	1.6	1.6	2.4	1.7	0	0.5	0.8

REF NO.	IC8001																			
MODE	61	62	63	64	65	66	67	68	69	70	71	72	73	74	75	76	77	78	79	80
CD PLAY	1.6	1.6	1.6	1.6	1.6	0	1.5	1.5	1.6	1.6	0	0	3.3	0	3.3	3.3	0	3.3	3.3	0
STANDBY	1.6	1.6	1.6	1.6	1.6	0	1.5	1.5	1.6	1.6	0	0	3.3	0	3.3	3.3	0	3.3	3.3	0

SC-HC397EB/EG, SC-HC395EG MAIN P.C.B.

14.1.4. MAIN P.C.B. (3/3)

REF NO.	IC8001																			
MODE	81	82	83	84	85	86	87	88	89	90	91	92	93	94	95	96	97	98	99	100
CD PLAY	0	1.6	1.6	0	0	3.1	1.1	3.3	3.3	0	0	1.6	0	2.8	3	3.3	0	0	0	0
STANDBY	0	1.6	1.6	0	0	3.1	1.1	3.3	3.3	0	0	1.6	0	2.8	3	3.3	0	0	0	0

REF NO.	IC8001																			
MODE	101	102	103	104	105	106	107	108	109	110	111	112	113	114	115	116	117	118	119	120
CD PLAY	3.2	3.3	0	0	3.3	0	3.3	0	3.3	3	3.3	3.3	1.7	1.7	1.7	3.3	3.3	3.3	3.3	3.2
STANDBY	3.2	3.3	0	0	3.3	0	3.3	0	3.3	3	3.3	3.3	1.7	1.7	1.7	3.3	3.3	3.3	3.3	3.2

REF NO.	IC8001																			
MODE	121	122	123	124	125	126	127	128												
CD PLAY	0	0	0	1.5	1.5	0	1.4	1.4												
STANDBY	0	0	0	1.5	1.5	0	1.4	1.4												

REF NO.	IC8002																			
MODE	1	2	3	4																
CD PLAY	3.3	3.3	0	0																
STANDBY	3.3	3.3	0	0																

REF NO.	Q400							Q402												
MODE	1	2	3	4	5	6		1	2	3	4	5	6							
CD PLAY	9.8	9.8	19.2	9.8	9.8	19.2		0	0	0	19.4	19.4	3.3							
STANDBY	9.8	9.8	19.2	9.8	9.8	19.2		0	0	0	19.4	19.4	3.3							

REF NO.	Q404									Q5001				Q6002						
MODE	1	2	3	4	5	6	7	8		E	C	B		1	2	3	4	5	6	
CD PLAY	19.5	19.5	19.5	4.1	19.5	19.5	19.5	19.5		3.3	3.2	2.5		0.3	0	0.5	0.3	0	0	
STANDBY	19.5	19.5	19.5	4.1	19.5	19.5	19.5	19.5		3.3	3.2	2.5		0.3	0	0.5	0.3	0	0	

REF NO.	Q6005				Q8000				Q8102							QR400				
MODE	E	C	B		E	C	B		1	2	3	4	5	6		E	C	B		
POWER	0	0	0.7		0	0	3.3		0	0.6	3.2	3.3	2.7	0.1		0	0	3.3		
STANDBY	0	0	0.7		0	0	3.3		0	0.6	3.2	3.3	2.7	0.1		0	0	3.3		

REF NO.	QR1100																			
MODE	E	C	B																	
CD PLAY	0	3.3	0																	
STANDBY	0	3.3	0																	

SC-HC397EB/EG, SC-HC395EG MAIN P.C.B.

15 Exploded View and Replacement Parts List

15.1. Exploded View and Mechanical replacement Parts List

15.1.1. Cabinet Parts Location (For HC395)

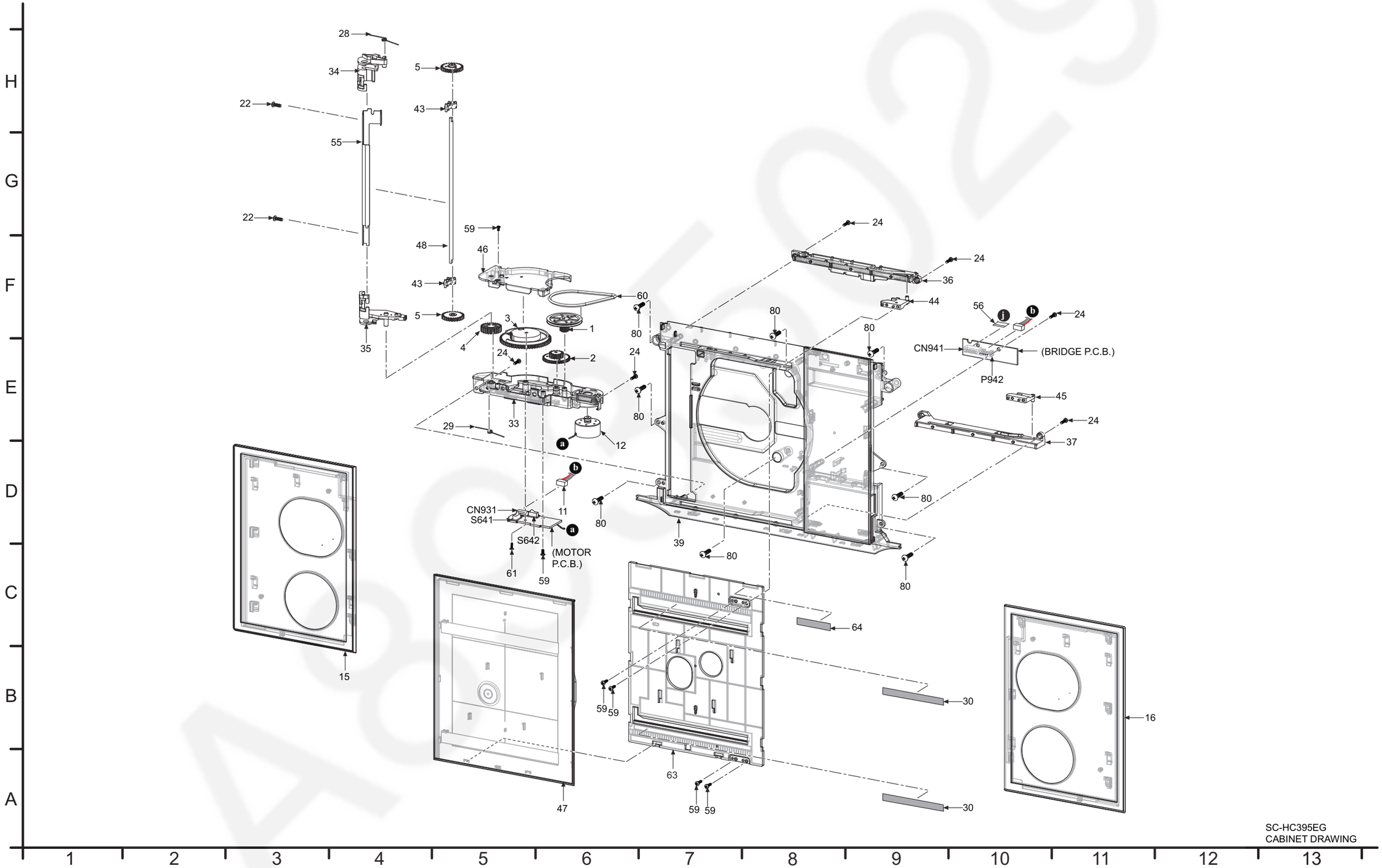

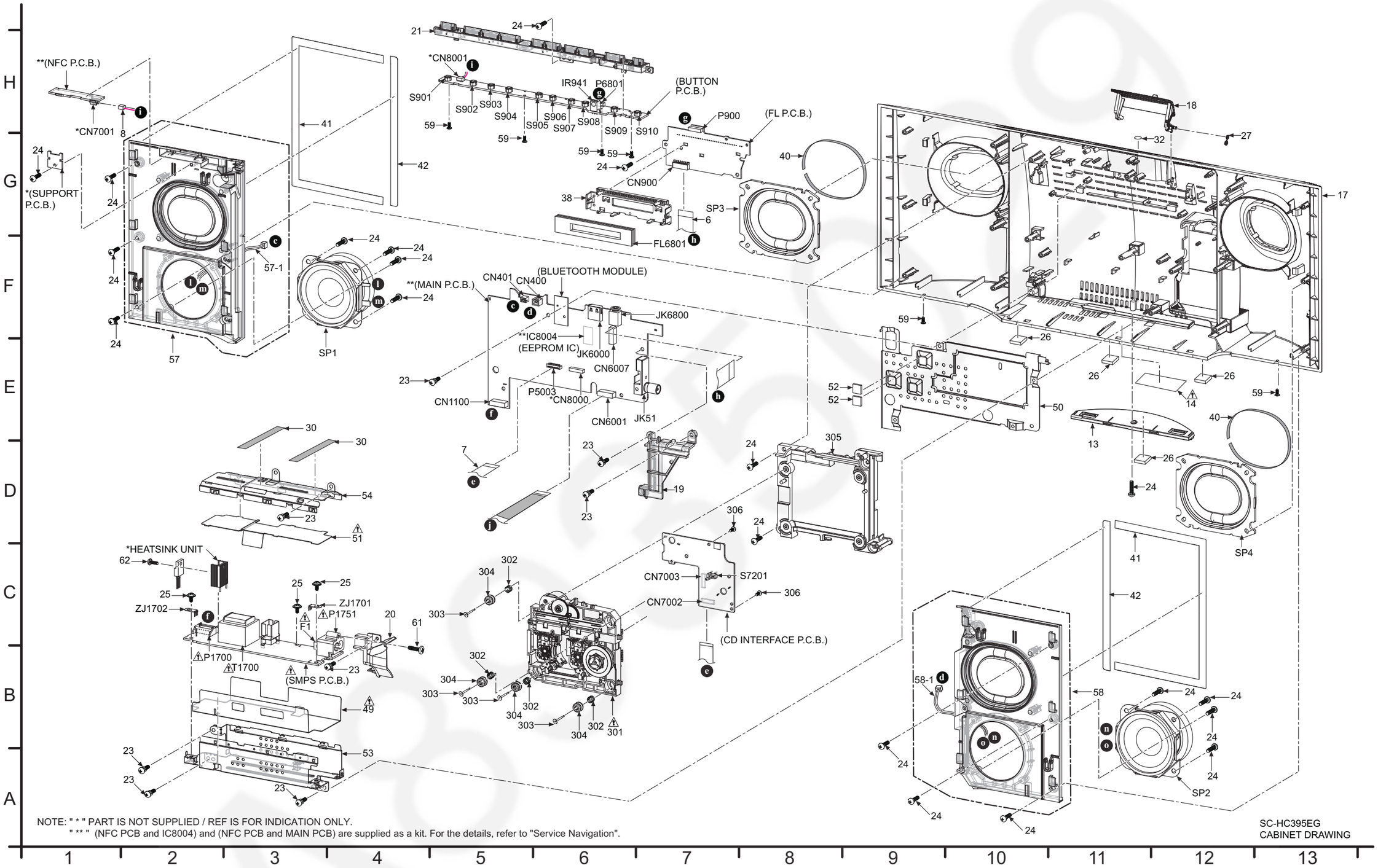
**(NFC P.C.B.)
*CN7001
*(SUPPORT P.C.B.)
*CN8001
S901
S902
S903
S904
S905
S906
S907
S908
S909
S910
IR941
P6801
(BUTTON P.C.B.)
P900
(FL P.C.B.)
CN900
FL6801
SP3
57-1
57
SP1
**(MAIN P.C.B.)
CN401
CN400
(BLUETOOTH MODULE)
JK6800
**IC8004
(EEPROM IC)
JK6000
CN6007
CN1100
P5003
*CN8000
CN6001
JK51
*HEATSINK UNIT
ZJ1702
ZJ1701
P1751
F1
P1700
T1700
(SMPS P.C.B.)
CN7003
S7201
CN7002
(CD INTERFACE P.C.B.)
58-1
SP4
SP2
NOTE: " * " PART IS NOT SUPPLIED / REF IS FOR INDICATION ONLY.
" ** " (NFC PCB and IC8004) and (NFC PCB and MAIN PCB) are supplied as a kit. For the details, refer to "Service Navigation".
SC-HC395EG
CABINET DRAWING

15.1.2. Packaging (For HC395)

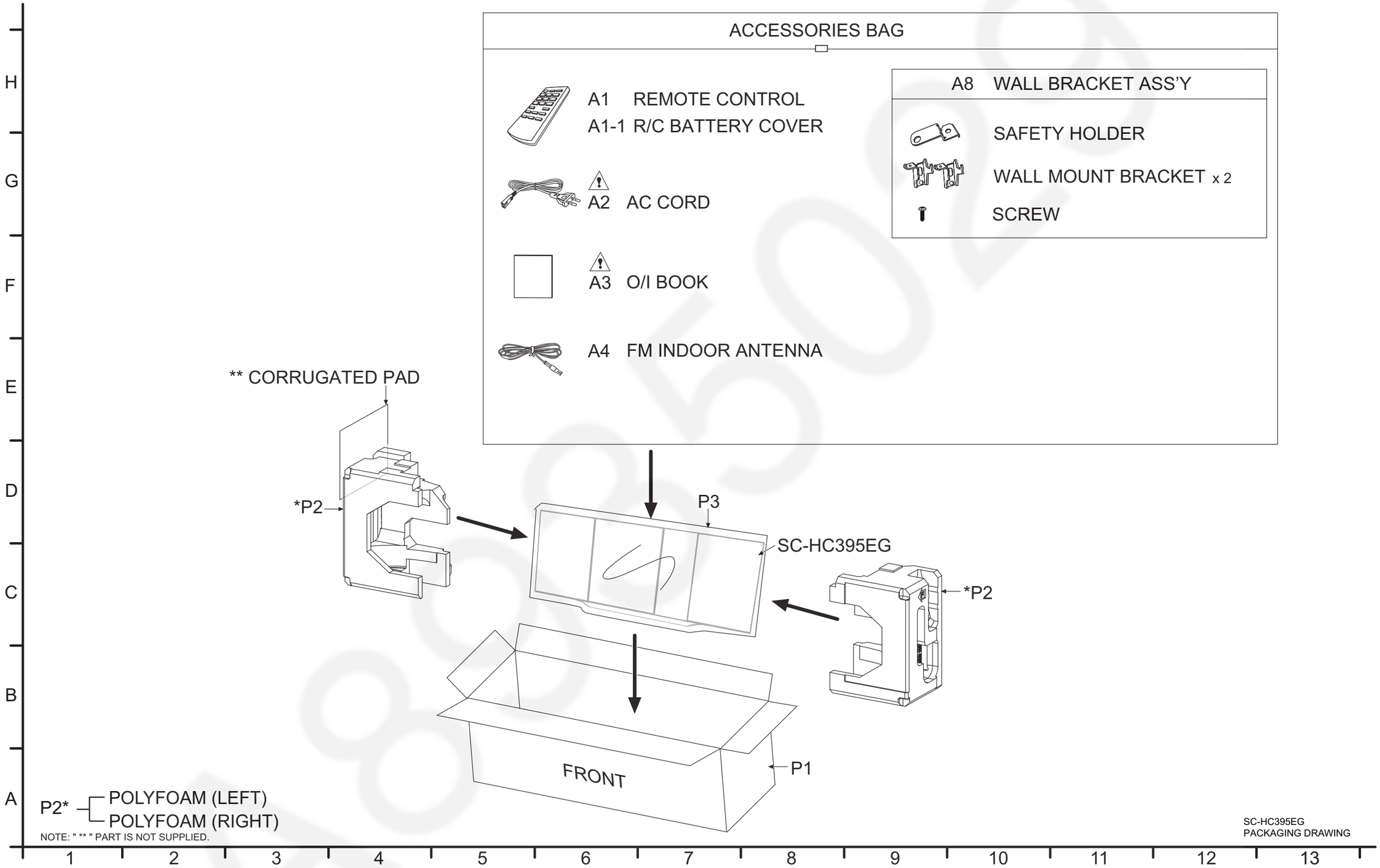

15.1.3. Cabinet Parts Location (For HC397)

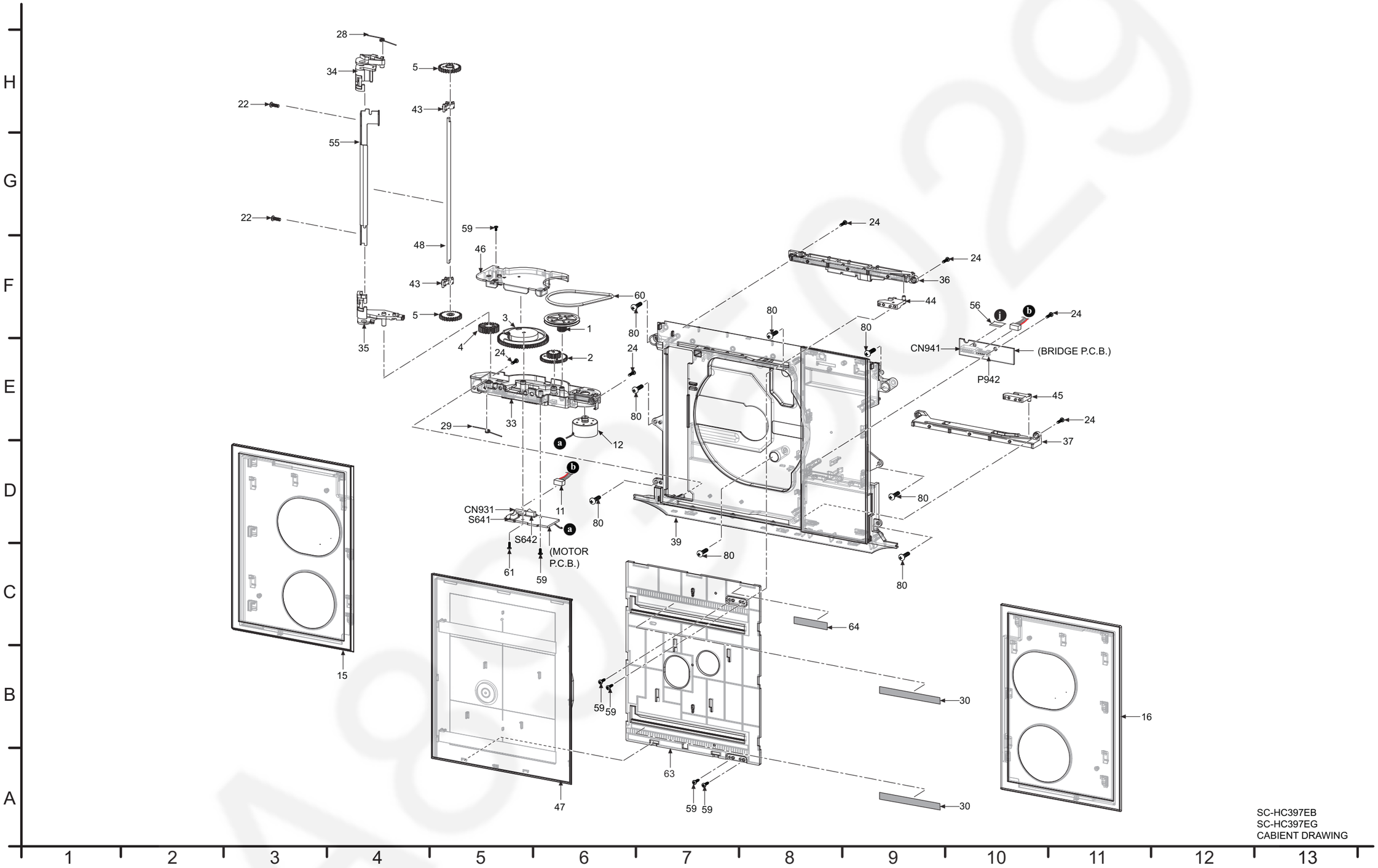

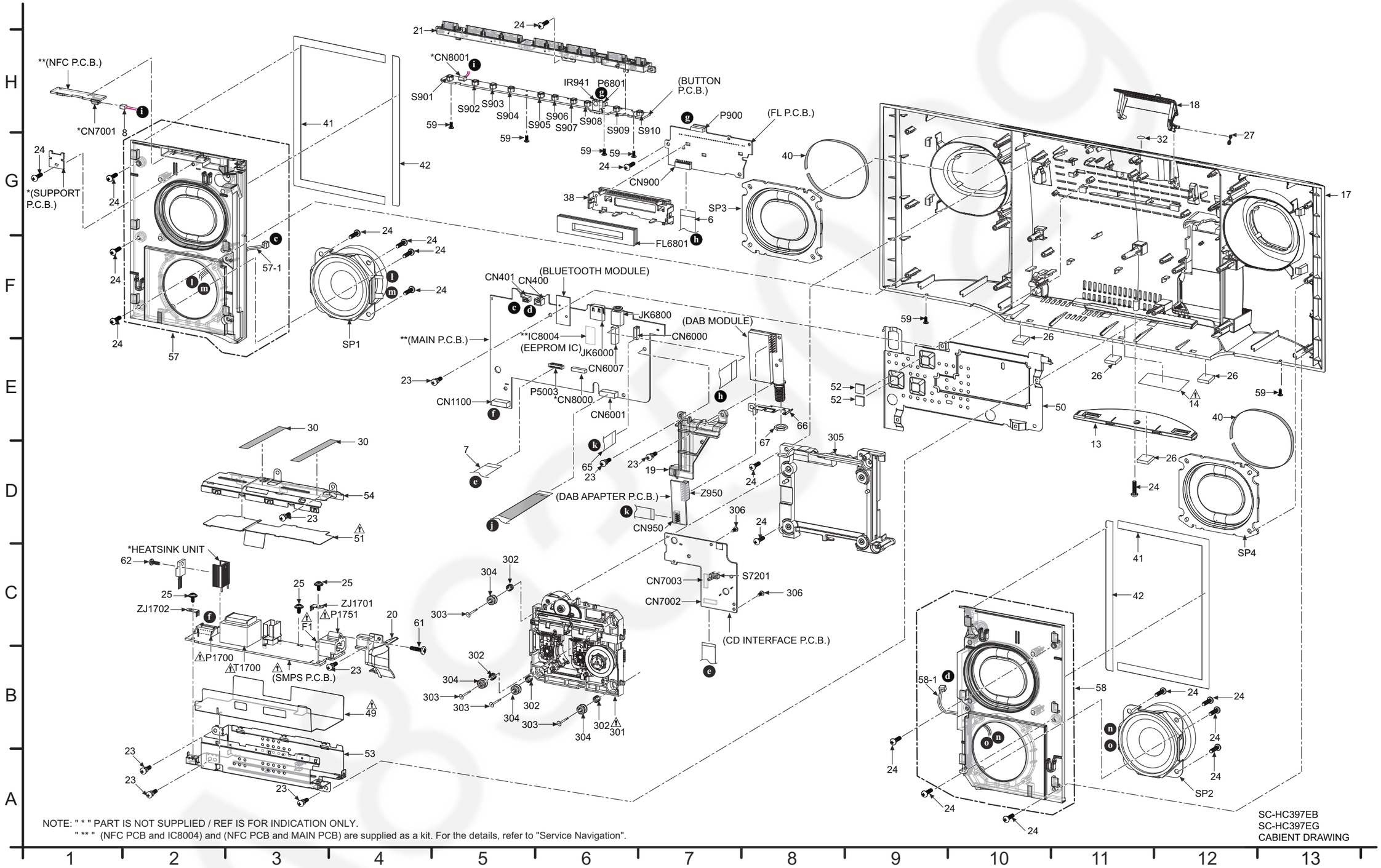

NOTE: " * " PART IS NOT SUPPLIED / REF IS FOR INDICATION ONLY.
" ** " (NFC PCB and IC8004) and (NFC PCB and MAIN PCB) are supplied as a kit. For the details, refer to "Service Navigation".

15.1.4. Packaging (For HC397)

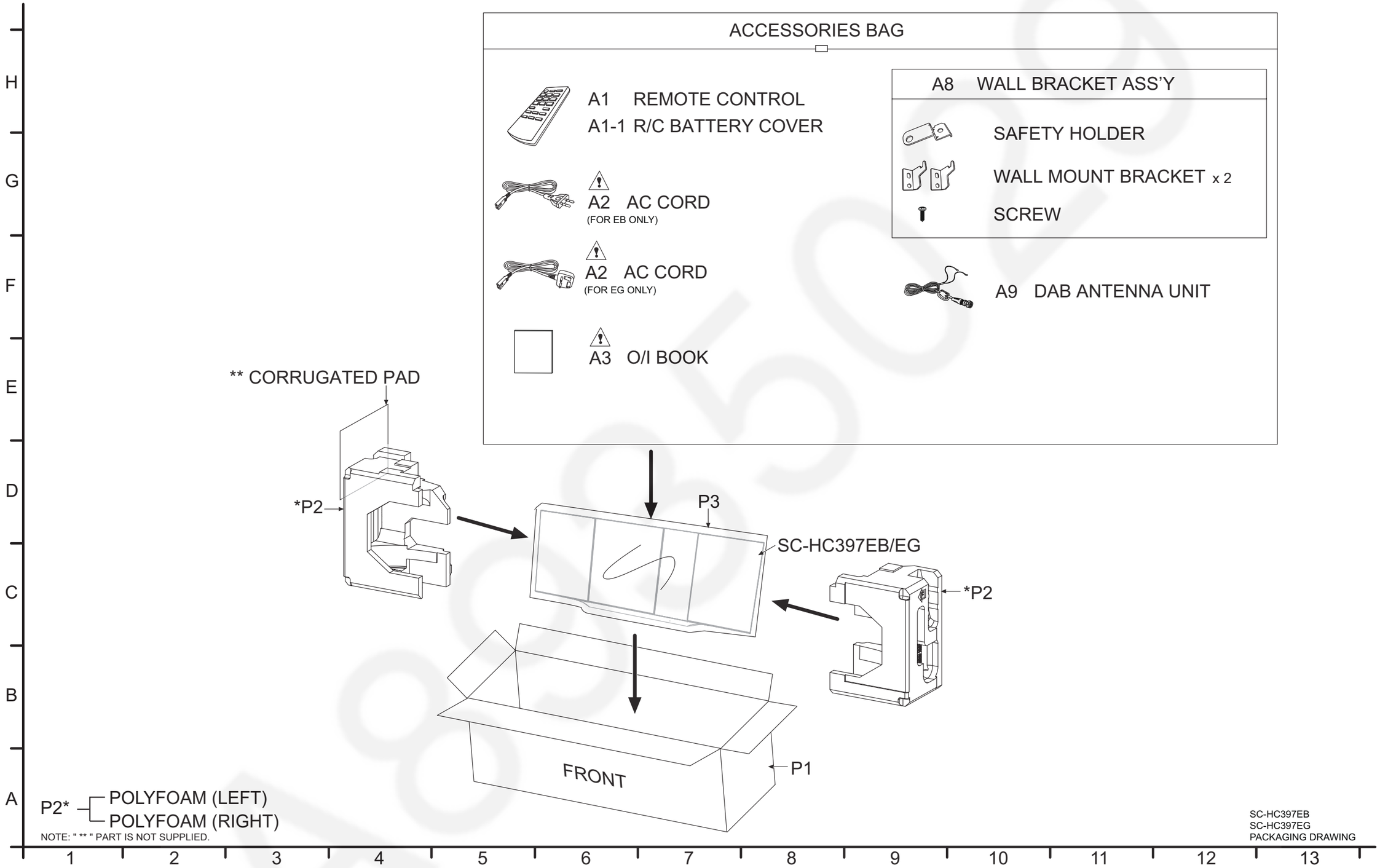

15.1.5. Mechanical Replacement Parts List

Important Safety Notice

Components identified by ⚠ mark have special characteristics important for safety.
When replacing any of these components, use only manufacturer's specified parts.

RTL (Retention Time Limited)

Note: The marking (RTL) indicates that the Retention Time is Limited for this item.
After the discontinuation of this assembly in production, the item will continue to be available for a specific period of time. The retention period of availability is dependant on the type of assembly, and in accordance with the laws governing part and product retention. After the end of this period, the assembly will no longer be available.

Note:

- When replacing any of these components, be sure to use only manufacturer's specified parts shown in the replacement part list.
- The parenthesized indications on the Remarks column specify the destination & product color (Refer to the cover page for the information).
- Parts without these indications shall be used for all areas.
- This product uses a laser diode. Refer to "Precaution of Laser Diode".
- All parts mentioned are supplied by PAVCJM unless indicated likewise.
- Reference for O/I book languages are as follows:

Ar:	Arabic	Du:	Dutch	It:	Italian	Sp:	Spanish
Cf:	Canadian French	En:	English	Ko:	Korean	Sw:	Swedish
Cz:	Czech	Fr:	French	Po:	Polish	Co:	Traditional Chinese
Da:	Danish	Ge:	German	Ru:	Russian	Cn:	Simplified Chinese
Pe:	Persian	Ur:	Ukraine	Pr:	Portuguese	Fi:	Finnish

Safety	Ref. No.	Part No.	Part Name & Description	Qty	Remarks
			CABINET AND CHASSIS		
	1	RDG0665	PULLEY GEAR	1	
	2	RDG0666	GEAR C	1	
	3	RDG0667	GEAR B	1	
	4	RDG0668	GEAR A	1	
	5	RDG0669	DRIVE GEAR	2	
	6	REE1957	14P FFC (FL-MAIN)	1	
	7	REE1908	24P FFC (MAIN - CD INTERFACE)	1	
	8	REX1499	2P WIRE (BUTTON - NFC)	1	
	11	REX1676	5P WIRE (MOTOR - BRIDGE)	1	
	12	RFKPHC37P-K	MOTOR ASS'Y	1	
	13	RGK2536-K	BASE STAND	1	HC395EG -K/S, HC397EB -S, HC397EG -K/S
	13	RGK2536-W	BASE STAND	1	HC395EG -W, HC397EG -W
⚠	14	RGN3591A-K1	NAME PLATE	1	HC395EG -K/S/W

Safety	Ref. No.	Part No.	Part Name & Description	Qty	Remarks
⚠	14	RGN3591B-K1	NAME PLATE	1	HC397EB -S, HC397EG -K/S, HC397EG -W
	15	RYK1915-K	FRONT ORNAMENT UNIT L	1	HC395EG -K, HC397EG -K
	15	RYK1915-S	FRONT ORNAMENT UNIT L	1	HC395EG -S, HC397EB -S, HC397EG -S
	15	RYK1915-W	FRONT ORNAMENT UNIT L	1	HC395EG -W, HC397EG -W
	16	RYK1916-K	FRONT ORNAMENT UNIT R	1	HC395EG -K, HC397EG -K
	16	RYK1916-S	FRONT ORNAMENT UNIT R	1	HC395EG -S, HC397EB -S, HC397EG -S
	16	RYK1916-W	FRONT ORNAMENT UNIT R	1	HC395EG -W, HC397EG -W
	17	RGP1681K-K3	REAR CABINET	1	HC395EG -K/S

Safety	Ref. No.	Part No.	Part Name & Description	Qty	Remarks
	17	RGP1681K-W3	REAR CABINET	1	HC395EG -W
	17	RGP1681L-K3	REAR CABINET	1	HC397EB -S, HC397EG -K, HC397EG -S
	17	RGP1681L-W3	REAR CABINET	1	HC397EG -W
	18	RGQ0797-K	JACK LID	1	HC395EG -K/S, HC397EB -S, HC397EG -K/S
	18	RGQ0797-W	JACK LID	1	HC395EG -W, HC397EG -W
	19	RGQ0799-K1	TUNER HOLDER	1	HC395EG -K/S
	19	RGQ0799-W1	TUNER HOLDER	1	HC395EG -W
	19	RGQ0799B-K1	TUNER HOLDER	1	HC397EB -S, HC397EG -K/S
	19	RGQ0799B-W1	TUNER HOLDER	1	HC397EG -W
	20	RGQ0800-K1	AC INLET HOLDER	1	HC395EG -K/S, HC397EB -S, HC397EG -K/S
	20	RGQ0800-W1	AC INLET HOLDER	1	HC395EG -W, HC397EG -W
	21	RGU2942-K1	TOP BUTTON	1	HC395EG -K/S, HC397EB -S, HC397EG -K/S
	21	RGU2942-W1	TOP BUTTON	1	HC395EG -W, HC397EG -W
	22	RHD14136	SCREW	2	
	23	RHD26043-1	SCREW	8	
	24	RHD26046	SCREW	26	
	25	RHD30092-1	SCREW	3	
	26	RKAX0028-K	LEG FELT	4	
	27	RMB0975	JACK LID SPRING	1	
	28	RMB0980	ARM SPRING (TOP)	1	
	29	RME0496	ARM SPRING	1	
	30	RMFX1028	HIMELON	4	
	32	RMG0997-K	LID CUSHON	1	
	33	RMK0869-1	GEAR BASE	1	
	34	RML0767-1	DOOR ARM TOP	1	
	35	RML0768	DOOR ARM BOTTOM	1	
	36	RMM0316	CAM RAIL TOP	1	
	37	RMM0317	CAM RAIL BOTTOM	1	
	38	RMN1049-1	FL HOLDER	1	
	39	RYP1956B-K2	FRONT CABINET UNIT	1	HC395EG -K/S/W, HC397EB -S, HC397EG -K/S/W
	40	RMQ2009	EPT SEALER (PASSIVE RADIATOR)	2	
	41	RMQ2260	EPT SEALER A	2	
	42	RMQ2261	EPT SEALER B	2	
	43	RMQ2266-1	DOOR HOLDER	2	
	44	RMQ2267	DOOR SLIDER TOP	1	
	45	RMQ2268	DOOR SLIDER BOTTOM	1	
	46	RMQ2269	GEAR COVER	1	

Safety	Ref. No.	Part No.	Part Name & Description	Qty	Remarks
	47	RYP2138-K	DOOR UNIT	1	HC395EG -K
	47	RYP2138-S	DOOR UNIT	1	HC395EG -S
	47	RYP2138-W	DOOR UNIT	1	HC395EG -W
	47	RYP2138A-S	DOOR UNIT	1	HC397EB -S, HC397EG -S
	47	RYP2138A-K	DOOR UNIT	1	HC397EG -K
	47	RYP2138A-W	DOOR UNIT	1	HC397EG -W
	48	RMU0104-1	GEAR SHAFT	1	
⚠	49	RMV0429	SMPS BRACKET INSULATOR A	1	
	50	RMV0431	BACK SHIELD	1	
⚠	51	RMV0432	SMPS COVER INSULATION	1	
	52	RSC1097	D-AMP HEAT ABSORBER	2	
	53	RSC1258	SMPS BRACKET	1	
	54	RSC1259	SMPS COVER	1	
	55	RSC1261	ARM BRACKET METAL	1	
	56	RXQ2223-1	14P FFC UNIT LINK-MAIN	1	
	57	RYK1833-K	SPEAKER CABINET UNIT L	1	
	57-1	REX1674	SPEAKER WIRE L	1	
	58	RYK1834-K	SPEAKER CABINET UNIT R	1	
	58-1	REX1675-1	SPEAKER WIRE R	1	
	59	VHD1224-1A	SCREW	12	
	60	VMG1720	BELT	1	
	61	XTB3+10JFJK	SCREW	2	
	62	XTB3+8JFJ-J	SCREW	1	
	63	RGP1682-K1	DOOR BASE	1	
	64	RMFX1026	HIMELON	1	
	65	REE1880	9P FFC (DAB ADAPTOR-MAIN)	1	HC397
	66	RSC1269	DAB BRACKET	1	HC397
	67	RHN95002	M9 NUT	1	HC397
	80	RHD26066	SCREW	8	
			SPEAKERS		
	SP1	EAS65P144F	FRONT SPEAKER	1	
	SP2	EAS65P144F	FRONT SPEAKER	1	
	SP3	RXX0328	PASSIVE RADIATOR UNIT	1	
	SP4	RXX0329	PASSIVE RADIATOR UNIT	1	
			TRAVERSE DECK		
⚠	301	RAE5308Z-V	TRAVERSE UNIT	1	
	302	RME0109-1	FLOATING SPRING	4	
	303	RMS0757-1	FIX PIN	4	
	304	RMG0730-G	FLOATING RUBBER	4	
	305	RMQ2020-1J	MIDDLE CHASSIS	1	
	306	XTN2+6GFJ	SCREW	2	
			PACKING MATERIALS		
	P1	RPG0T05	PACKING CASE	1	HC395EG -K
	P1	RPG0T06	PACKING CASE	1	HC395EG -W
	P1	RPG0T13	PACKING CASE	1	HC397EB -S
	P1	RPG0T14	PACKING CASE	1	HC397EG -K

Safety	Ref. No.	Part No.	Part Name & Description	Qty	Remarks
	P1	RPG0T26	PACKING CASE	1	HC397EG -S
	P1	RPG0T27	PACKING CASE	1	HC397EG -W
	P1	RPG0T28	PACKING CASE	1	HC395EG -S
	P2	RPN2629	POLYFOAM	1	
	P3	RPFX0262-1	MIRAMAT BAG	1	
			ACCESSORIES		
	A1	N2QAYB000944	REMOTE CONTROL	1	
	A1-1	RKK-AKX18PHK	R/C BATTERY COVER	1	
⚠	A2	K2CQ2YY00119	AC CORD	1	HC395EG , HC397EG
⚠	A2	K2CT2YY00097	AC CORD	1	HC397EB
⚠	A3	RQT0A88-B	O/I BOOK (En)	1	HC397EB , HC395EG
⚠	A3	RQT0A89-D	O/I BOOK (Ge/Fr/ It/Fi)	1	HC397EB /EG, HC395EG
⚠	A3	RQT0A90-E	O/I BOOK (Sw/Da/ Po/Cz)	1	HC397EB /EG, HC395EG
⚠	A3	RQT0A91-R	O/I BOOK (Sp/Du)	1	HC395EG
	A4	RSAX0002	FM INDOOR ANTENNA	1	
	A8	RFA3549-1	WALL BRACKET ASS’Y	1	
	A9	RFA3669	DAB ANTENNA UNIT	1	HC397

A8935029

15.2. Electrical Replacement Parts List

Important Safety Notice

Components identified by ⚠ mark have special characteristics important for safety.
When replacing any of these components, use only manufacturer's specified parts.

RTL (Retention Time Limited)

Note: The marking (RTL) indicates that the Retention Time is Limited for this item.
After the discontinuation of this assembly in production, the item will continue to be available for a specific period of time. The retention period of availability is dependant on the type of assembly, and in accordance with the laws governing part and product retention.
After the end of this period, the assembly will no longer be available.

Note:

- When replacing any of these components, be sure to use only manufacturer's specified parts shown in the replacement part list.
- The parenthesized indications on the Remarks column specify the destination & product color (Refer to the cover page for the information).
- Parts without these indications shall be used for all areas.
- This product uses a laser diode. Refer to "Precaution of Laser Diode".
- Capacitor value are in microfarads (uF) unless specified otherwise, P=Pico-farads (pF), F=Farads.
- Resistance values are in ohms, unless specified otherwise, 1K=1000 (OHM).
- All parts mentioned are supplied by PAVCJM unless indicated likewise.
- Parts mentioned [SPG] in the Remarks column are supplied by JAPAN.

E.S.D. standards for Electrostatically Sensitive Devices, refer to "PREVENTION OF ELECTROSTATIC DISCHARGE (ESD) TO ELECTROSTATIC SENSITIVE (ES) DEVICES" section.

Safety	Ref. No.	Part No.	Part Name & Description	Qty	Remarks
			PRINTED CIR-CUITS BOARDS		
	PCB1	REP5057A	CD INTERFACE P.C.B.	1	(RTL)
	PCB2	RFKV5053QA	MAIN P.C.B KIT ASS'Y	1	HC395EG
	PCB2	RFKV5053SA	MAIN P.C.B KIT ASS'Y	1	HC397EB /EG
	PCB3	REP5053QC	BRIDGE P.C.B.	1	(RTL) HC395EG
	PCB3	REP5053SC	BRIDGE P.C.B.	1	(RTL) HC397EB /EG
	PCB4	REP5053QF	MOTOR P.C.B.	1	(RTL) HC395EG
	PCB4	REP5053SF	MOTOR P.C.B.	1	(RTL) HC397EB /EG
⚠	PCB5	REP5054FA	SMPS P.C.B.	1	(RTL)
	PCB6	REP5054FB	FL P.C.B.	1	(RTL)
	PCB7	REP5054FC	BUTTON P.C.B.	1	(RTL)
	PCB8	RFKV5053QB	NFC KIT ASS'Y	1	HC395EG
	PCB8	RFKV5053SB	NFC KIT ASS'Y	1	HC397EB /EG
	PCB9	RSNE031B0	BLUETOOTH MODULE	1	
	PCB10	REP5053SD	DAB ADAPTER P.C.B.	1	HC397EB /EG
	PCB11	RFKZHC397DAB	DAB MODULE	1	HC397EB /EG
			INTEGRATED CIR-CUITS		

Safety	Ref. No.	Part No.	Part Name & Description	Qty	Remarks
	IC52	VUEALLPT091	IC	1	(E.S.D) HC397EB /EG
	IC52	VUEALLPT094	IC	1	(E.S.D) HC395EG
	IC400	VUEALLPT092	IC	1	(E.S.D)
	IC950	C0DBFYY00164	IC	1	(E.S.D) HC397EB /EG
	IC952	C0DBGYY03702	IC	1	(E.S.D) HC397EB /EG
	IC1101	C0DBAYY01997	IC	1	(E.S.D)
	IC1103	C0DBGYY03909	IC	1	(E.S.D)
	IC1104	C0DBAYY01996	IC	1	(E.S.D)
	IC1105	C0DBEYY00146	IC	1	(E.S.D)
	IC1106	C0DBGYY00911	IC	1	(E.S.D)
	IC1108	C0DBEYY00315	IC	1	(E.S.D)
	IC1109	C0DBGYY05244	IC	1	(E.S.D)
	IC1700	C0DACYY00012	IC	1	(E.S.D)
	IC1701	C0DBZMC00006	IC	1	(E.S.D)
	IC5001	C0GBY0000213	IC	1	(E.S.D)
	IC6001	C0JBAR000586	IC	1	(E.S.D)
	IC6800	C0ABBA000159	IC	1	(E.S.D)
	IC6900	C0JBAC000363	IC	1	(E.S.D)
	IC7230	C0DBGYY00969	IC	1	(E.S.D)
	IC8001	C1AB00004188	IC	1	(E.S.D)
	IC8002	C0EBE0000338	IC	1	(E.S.D)
	IC8003	RFKWFHC395EM	IC	1	(E.S.D) HC395EG
	IC8003	RFKWFHC397EM	IC	1	(E.S.D) HC397EB /EG
	IC8004	RFKV5053QB	IC	1	(E.S.D) HC395EG
	IC8004	RFKV5053SB	IC	1	(E.S.D) HC397EB /EG

Safety	Ref. No.	Part No.	Part Name & Description	Qty	Remarks
			TRANSISTORS		
	Q400	B1HBCDA00001	TRANSISTOR	1	(E.S.D)
	Q402	B1HFCDE00002	TRANSISTOR	1	(E.S.D)
	Q404	B1CHRC000047	TRANSISTOR	1	(E.S.D)
	Q1700	B1ABGC000001	TRANSISTOR	1	(E.S.D)
	Q1701	DSA500100L	TRANSISTOR	1	(E.S.D)
	Q5001	B1ADCE000012	TRANSISTOR	1	(E.S.D)
	Q5001	B1ADCF000001	TRANSISTOR	1	(E.S.D)
	Q6002	B1MBAFE00002	TRANSISTOR	1	(E.S.D)
	Q6005	B1ABCF000176	TRANSISTOR	1	(E.S.D)
	Q6801	B1HFCDE00002	TRANSISTOR	1	(E.S.D)
	Q6816	B1HFCDE00002	TRANSISTOR	1	(E.S.D)
	Q8000	B1GBCFNN0038	TRANSISTOR	1	(E.S.D)
	Q8102	B1HFCDE00002	TRANSISTOR	1	(E.S.D)
	QR400	B1GBCFNN0038	TRANSISTOR	1	(E.S.D)
	QR1100	B1GBCFNN0038	TRANSISTOR	1	(E.S.D)
	QR1700	B1GBCFJJ0051	TRANSISTOR	1	(E.S.D)
			DIODES		
	D1101	DA2J10100L	DIODE	1	(E.S.D)
	D1104	DZ2J062M0L	DIODE	1	(E.S.D)
	D1112	DZ2J062M0L	DIODE	1	(E.S.D)
	D1113	DZ2J075M0L	DIODE	1	(E.S.D)
	D1115	DZ2J130M0L	DIODE	1	(E.S.D)
	D1220	B0ADDH000009	DIODE	1	(E.S.D)
	D1221	DA2J10100L	DIODE	1	(E.S.D)
	D1223	DA2J10100L	DIODE	1	(E.S.D)
	D1224	B0JCGD000016	DIODE	1	(E.S.D)
	D1700	B0ABSM000008	DIODE	1	(E.S.D)
	D1701	B0EBLR000034	DIODE	1	(E.S.D)
	D1702	DZ2J075M0L	DIODE	1	(E.S.D)
	D1703	B0EAKT000063	DIODE	1	(E.S.D)
	D1708	DA22F2100L	DIODE	1	(E.S.D)
	D1709	DZ2J330M0L	DIODE	1	(E.S.D)
	D6020	DZ2J036M0L	DIODE	1	(E.S.D)
	D6550	DZ2J036M0L	DIODE	1	(E.S.D)
	D6801	B0ADDH000009	DIODE	1	(E.S.D)
	D6802	B0ADDH000009	DIODE	1	(E.S.D)
	D6806	DZ2J051M0L	DIODE	1	(E.S.D)
	D7230	DA2J10100L	DIODE	1	(E.S.D)
	D7231	DA2J10100L	DIODE	1	(E.S.D)
	D8000	B0ADDH000009	DIODE	1	(E.S.D)
			VARISTORS		
	VA51	EZAEG2A50AX	VARISTOR	1	
			SWITCHES		
	S641	K0L1BA000078	SW OPEN	1	
	S642	K0L1BA000078	SW CLOSE	1	
	S901	EVQ11G04M	SW POWER	1	
	S902	EVQ11G04M	SW SELECTOR	1	
	S903	EVQ11G04M	SW STOP	1	
	S904	EVQ11G04M	SW PLAY/PAUSE	1	
	S905	EVQ11G04M	SW REV/SKIP	1	
	S906	EVQ11G04M	SW FWD/SKIP	1	
	S907	EVQ11G04M	SW VOL -	1	
	S908	EVQ11G04M	SW VOL +	1	
	S909	EVQ11G04M	SW CD OPEN/CLOSE	1	
	S910	EVQ11G04M	SW BLUETOOTH PAIRING	1	
	S7201	K0L1BA000158	SW RESET	1	
			CONNECTORS		
	CN400	K1KA02AA0180	2P CONNECTOR	1	
	CN401	K1KA02AA0193	2P CONNECTOR	1	
	CN900	K1MY14BA0566	14P CONNECTOR	1	
	CN931	K1KA05BA0047	5P CONNECTOR	1	

Safety	Ref. No.	Part No.	Part Name & Description	Qty	Remarks
	CN941	K1MY14AA0267	14P CONNECTOR	1	
	CN950	K1MY09BA0565	9P CONNECTOR	1	HC397
	CN1100	K1KY07A00029	7P CONNECTOR	1	
	CN6000	K1MY09AA0266	9P CONNECTOR	1	HC397
	CN6001	K1MY14AA0267	14P CONNECTOR	1	
	CN6007	K1MY14AA0267	14P CONNECTOR	1	
	CN7002	K1MY24B00006	24P CONNECTOR	1	
	CN7003	K1MY24B00006	24P CONNECTOR	1	
	P900	K1KA06AA0031	6P CONNNECTOR	1	
	P942	K1KA05AA0193	5P CONNECTOR	1	
	P1700	K1KY07B00021	7P CONNECTOR	1	
	P5003	K1MY24A00001	24P CONNECTOR	1	
	P6801	K1KB06B00038	6P CONNNECTOR	1	
			COILS AND INDUC-TORS		
	L51	G1CR18JA0020	INDUCTOR	1	HC395
	L60	J0JYC0000656	INDUCTOR	1	
	L80	J0JYC0000656	INDUCTOR	1	
	L400	G1C330MA0226	INDUCTOR	1	
	L401	G1C330MA0226	INDUCTOR	1	
	L402	G1C330MA0226	INDUCTOR	1	
	L403	G1C330MA0226	INDUCTOR	1	
	L1102	G1C100MA0226	INDUCTOR	1	
	L1105	G1C100MA0226	INDUCTOR	1	
	L1700	G1C100K00019	INDUCTOR	1	
⚠	L1702	G0B922G00002	LINE FILTER	1	
	L6800	J0JBC0000019	INDUCTOR	1	
	L6801	J0JBC0000019	INDUCTOR	1	
	L6802	J0JBC0000019	INDUCTOR	1	
	L7230	J0JYC0000305	INDUCTOR	1	
	LB51	J0JYC0000656	INDUCTOR	1	HC395
	LB61	J0JHC0000118	INDUCTOR	1	
	LB400	J0JYC0000107	INDUCTOR	1	
	LB401	J0JYC0000107	INDUCTOR	1	
	LB402	J0JYC0000366	INDUCTOR	1	
	LB403	J0JYC0000366	INDUCTOR	1	
	LB404	J0JYC0000366	INDUCTOR	1	
	LB405	J0JYC0000366	INDUCTOR	1	
	LB411	J0JYC0000656	INDUCTOR	1	
	LB952	J0JHC0000118	INDUCTOR	1	HC397
	LB980	J0JYC0000656	INDUCTOR	1	
	LB981	J0JYC0000656	INDUCTOR	1	
	LB982	J0JYC0000656	INDUCTOR	1	
	LB1103	J0JHC0000046	INDUCTOR	1	
	LB1104	J0JGC0000063	INDUCTOR	1	
	LB1105	J0JGC0000063	INDUCTOR	1	
	LB1107	J0JGC0000063	INDUCTOR	1	
	LB1108	J0JYC0000656	INDUCTOR	1	
	LB1161	J0JHC0000046	INDUCTOR	1	
	LB1162	J0JHC0000118	INDUCTOR	1	
	LB1181	J0JGC0000063	INDUCTOR	1	
	LB1221	J0JGC0000063	INDUCTOR	1	
	LB1222	J0JHC0000046	INDUCTOR	1	
	LB1223	J0JGC0000063	INDUCTOR	1	
	LB5001	J0JYC0000656	INDUCTOR	1	
	LB5002	J0JYC0000366	INDUCTOR	1	
	LB5004	J0JGC0000063	INDUCTOR	1	
	LB5005	J0JYB0000013	INDUCTOR	1	
	LB5006	J0JYC0000656	INDUCTOR	1	
	LB6000	J0JHC0000046	INDUCTOR	1	
	LB6101	J0JGC0000063	INDUCTOR	1	
	LB6800	J0JYC0000656	INDUCTOR	1	
	LB6801	J0JHC0000118	INDUCTOR	1	
	LB6802	J0JHC0000118	INDUCTOR	1	
	LB6803	J0JHC0000118	INDUCTOR	1	
	LB6804	J0JHC0000118	INDUCTOR	1	
	LB6805	J0JHC0000118	INDUCTOR	1	
	LB6810	J0JYC0000656	INDUCTOR	1	
	LB6811	J0JYC0000656	INDUCTOR	1	
	LB6812	J0JYC0000656	INDUCTOR	1	
	LB6813	J0JYC0000656	INDUCTOR	1	

Safety	Ref. No.	Part No.	Part Name & Description	Qty	Remarks
	LB8000	J0JYC0000656	INDUCTOR	1	
	LB8001	J0JYC0000656	INDUCTOR	1	
	LB8002	J0JYC0000656	INDUCTOR	1	
	LB8003	J0JYC0000656	INDUCTOR	1	
	LB8004	J0JYC0000656	INDUCTOR	1	
	LB8005	J0JYC0000656	INDUCTOR	1	
	LB8006	J0JYC0000656	INDUCTOR	1	
	LB8007	J0JYC0000656	INDUCTOR	1	
	LB8008	J0JYC0000656	INDUCTOR	1	
	LB8009	J0JYC0000656	INDUCTOR	1	
	LB8010	J0JYC0000656	INDUCTOR	1	
	LB8011	J0JYC0000656	INDUCTOR	1	
	LB8012	J0JHC0000118	INDUCTOR	1	
	LB8013	J0JHC0000118	INDUCTOR	1	
	LB8014	J0JYC0000656	INDUCTOR	1	
	LB8015	J0JYC0000656	INDUCTOR	1	
	LB8016	J0JYC0000656	INDUCTOR	1	
	LB8017	J0JYC0000656	INDUCTOR	1	
	LB8018	J0JYC0000656	INDUCTOR	1	
	LB8019	J0JYC0000656	INDUCTOR	1	
	LB8020	J0JYC0000656	INDUCTOR	1	
			TRANSFORMERS		
⚠	T1700	G4DYZ0000077	SWITCHING TRANS-FORMER	1	
			COMPONENT COMBI-NATION		
	Z950	K1JY14Y00003	CONNECTOR	1	HC397
⚠	Z1752	D4EAY511A182	VARISTOR	1	
			PHOTO COUPLER		
⚠	PC1702	B3PBA0000579	PHOTO COUPLER	1	
			TERMINALS		
	ZJ1701	K4CZ01000027	TERMINAL	1	
	ZJ1702	K4CZ01000027	TERMINAL	1	
			OSCILLATORS		
	X400	H0J245500110	OSCILLATOR	1	
	X8001	H0J169500044	OSCILLATOR	1	
	X8002	H0A327200191	OSCILLATOR	1	
			FL DISPLAY		
	FL6801	A2BB00000186	FL DISPLAY	1	
			FUSE		
⚠	F1	K5G202Y00006	FUSE	1	
			JACKS		
	JK51	K4ZZ02000103	CONNECTOR	1	HC395
	JK6000	K1FY104B0111	CONNECTOR	1	
	JK6800	K2HC1YYB0033	JK HEADPHONE	1	
⚠	P1751	K2AA2B000011	AC INLET	1	
			CHIP JUMPERS		
	D5001	D0GBR00J0004	0 1/10W	1	
	LB5003	D0GBR00J0004	0 1/10W	1	
	LB52	D0GAR00J0005	0 1/16W	1	HC395
	LB6814	D0GBR00J0004	0 1/10W	1	
	LB6815	D0GBR00J0004	0 1/10W	1	
	LB951	D0GBR00J0004	0 1/10W	1	HC397
	LB953	D0GBR00J0004	0 1/10W	1	HC397
	W200	D0GFR00J0005	0 1/4W	1	

Safety	Ref. No.	Part No.	Part Name & Description	Qty	Remarks
	W201	D0GFR00J0005	0 1/4W	1	
	W202	D0GFR00J0005	0 1/4W	1	
	W203	D0GFR00J0005	0 1/4W	1	
	W300	D0GDR00J0004	0 1/8W	1	
	W301	D0GBR00J0004	0 1/10W	1	
			REMOTE SENSOR		
	IR941	B3RAD0000224	REMOTE SENSOR	1	
			RESISTORS		
	L6803	D0GD220JA052	22 1/8W	1	
	R51	D0GB222JA065	2.2K 1/10W	1	
	R52	D0GB561JA065	560 1/10W	1	
	R53	D0GA472JA023	4.7K 1/16W	1	
	R54	D0GA472JA023	4.7K 1/16W	1	
	R55	D0GA221JA023	220 1/16W	1	
	R56	D0GB221JA065	220 1/10W	1	
	R57	D0GA102JA023	1K 1/16W	1	
	R59	D0GB222JA065	2.2K 1/10W	1	HC397
	R59	D0GBR00J0004	0 1/10W	1	HC395
	R60	D0GB331JA065	330 1/10W	1	
	R63	D0GBR00J0004	0 1/10W	1	
	R64	D0GBR00J0004	0 1/10W	1	
	R400	D0GB221JA065	220 1/10W	1	
	R402	D0GB101JA065	100 1/10W	1	
	R403	D0GB101JA065	100 1/10W	1	
	R404	D0GB101JA065	100 1/10W	1	
	R405	D0GBR00J0004	0 1/10W	1	
	R406	D0GBR00J0004	0 1/10W	1	
	R407	D0GBR00J0004	0 1/10W	1	
	R408	D0GBR00J0004	0 1/10W	1	
	R412	D0GB105JA065	1M 1/10W	1	
	R413	D0GB152JA065	1.5K 1/10W	1	
	R414	D0GB152JA065	1.5K 1/10W	1	
	R416	D0GB104JA065	100K 1/10W	1	
	R417	D0GD5R6JA052	5.6 1/8W	1	
	R418	D0GD5R6JA052	5.6 1/8W	1	
	R419	D0GD5R6JA052	5.6 1/8W	1	
	R420	D0GD5R6JA052	5.6 1/8W	1	
	R421	D0GBR00J0004	0 1/10W	1	
	R427	D0GB221JA065	220 1/10W	1	
	R428	D0GB102JA065	1K 1/10W	1	
	R429	D0GB472JA065	4.7K 1/10W	1	
	R430	D0GB104JA065	100K 1/10W	1	
	R431	D0GB223JA065	22K 1/10W	1	
	R432	D0GB104JA065	100K 1/10W	1	
	R433	D0GB104JA065	100K 1/10W	1	
	R434	D0GB104JA065	100K 1/10W	1	
	R435	D0GB104JA065	100K 1/10W	1	
	R436	D0GB104JA065	100K 1/10W	1	
	R437	D0GB104JA065	100K 1/10W	1	
	R441	D0GBR00J0004	0 1/10W	1	
	R442	D0GA101JA023	100 1/16W	1	
	R443	D0GA101JA023	100 1/16W	1	
	R444	D0GA101JA023	100 1/16W	1	
	R902	D0GB222JA065	2.2K 1/10W	1	
	R903	D0GB392JA065	3.9K 1/10W	1	
	R904	D0GB682JA065	6.8K 1/10W	1	
	R905	D0GB183JA065	18K 1/10W	1	
	R906	D0GB392JA065	3.9K 1/10W	1	
	R907	D0GB392JA065	3.9K 1/10W	1	
	R908	D0GB682JA065	6.8K 1/10W	1	
	R909	D0GB183JA065	18K 1/10W	1	
	R941	D0GB330JA065	33 1/10W	1	
	R942	D0GBR00J0004	0 1/10W	1	
	R951	D0GBR00J0004	0 1/10W	1	HC397
	R954	D0GBR00J0004	0 1/10W	1	HC397
	R956	D0GB101JA065	100 1/10W	1	HC397
	R957	D0GB101JA065	100 1/10W	1	HC397
	R958	D0GB101JA065	100 1/10W	1	HC397
	R1103	D1BB5602A074	56K 1/10W	1	

Safety	Ref. No.	Part No.	Part Name & Description	Qty	Remarks
	R1104	D1BB1002A074	10K 1/10W	1	
	R1110	D0GBR00J0004	0 1/10W	1	
	R1111	D0GBR00J0004	0 1/10W	1	
	R1116	D1BB4642A074	460K 1/10W	1	
	R1117	D1BB3300A074	330 1/10W	1	
	R1118	D1BB1002A074	10K 1/10W	1	
	R1119	D0GB100JA065	10 1/10W	1	
	R1120	D0GBR00J0004	0 1/10W	1	
	R1123	D0GBR00J0004	0 1/10W	1	
	R1127	ERJ3GEYF474V	470K 1/10W	1	
	R1128	D1BB3902A074	39K 1/10W	1	
	R1151	D0GB100JA065	10 1/10W	1	
	R1181	D1BB6041A074	6.04K 1/10W	1	
	R1182	D1BB1002A074	10K 1/10W	1	
	R1191	D0GB680JA065	68 1/10W	1	
	R1221	D0GB184JA065	180K 1/10W	1	
	R1222	D0GB473JA065	47K 1/10W	1	
	R1301	D0GB5R6JA065	5.6 1/10W	1	
	R1302	D0GB5R6JA065	5.6 1/10W	1	
	R1400	D0GB104JA065	100K 1/10W	1	
	R1401	D0GB273JA065	27K 1/10W	1	
	R1700	D0GD4R7JA052	4.7 1/8W	1	
	R1701	D0GB152JA065	1.5K 1/10W	1	
	R1702	D0GB682JA065	6.8K 1/10W	1	
	R1703	D0GB332JA065	3.3K 1/10W	1	
	R1704	ERJ1TYJ333U	33K 1W	1	
	R1705	D0GB103JA065	10K 1/10W	1	
	R1706	D0GB223JA065	22K 1/10W	1	
	R1707	D0GB392JA065	3.9K 1/10W	1	
	R1708	ERJ1TYJ220U	22 1W	1	
	R1710	D1BB5602A074	56K 1/10W	1	
	R1711	D0GB103JA065	10K 1/10W	1	
	R1716	D0GB394JA065	390K 1/10W	1	
	R1717	D0GB122JA065	1.2K 1/10W	1	
	R1718	ERX2SJR22P	0.22 2W	1	
⚠	R1724	ERJ12YJ105U	1M 1/10W	1	
	R1725	D0GB223JA065	22K 1/10W	1	
⚠	R1726	ERJ12YJ105U	1M 1/10W	1	
	R1727	D0GB104JA065	100K 1/10W	1	
	R1728	D1BB8201A074	8.2K 1/10W	1	
	R1729	ERJ6GEYJ220V	22 1/8W	1	
	R1730	D1BB1502A074	15K 1/10W	1	
	R4000	D0GA332JA023	3.3K 1/16W	1	
	R5005	D0GB683JA065	68K 1/10W	1	
	R5006	D0GB683JA065	68K 1/10W	1	
	R5007	D0GBR00J0004	0 1/10W	1	
	R5008	D0GB101JA065	100 1/10W	1	
	R5009	D0GB152JA065	1.5K 1/10W	1	
	R5011	D0GB682JA065	6.8K 1/10W	1	
	R5012	D0GBR00J0004	0 1/10W	1	
	R5013	D0GB473JA065	47K 1/10W	1	
	R5014	D0GBR00J0004	0 1/10W	1	
	R5015	D0GBR00J0004	0 1/10W	1	
	R5016	D0GB104JA065	100K 1/10W	1	
	R5017	D0GBR00J0004	0 1/10W	1	
	R5018	D0GB153JA065	15K 1/10W	1	
	R5019	D0GB473JA065	47K 1/10W	1	
	R5019	D0GB4R7JA065	4.7 1/10W	1	
	R5020	D0GB104JA065	100K 1/10W	1	
	R5021	D0GB4R7JA065	4.7 1/10W	1	
	R5022	D0GB102JA065	1K 1/10W	1	
	R5022	D0GB152JA065	1.5K 1/10W	1	
	R5023	D0GBR00J0004	0 1/10W	1	
	R5025	J0JYB0000013	INDUCTOR	1	
	R5026	D0GFR00J0005	0 1/4W	1	
	R5035	D0GB103JA065	10K 1/10W	1	
	R5037	D0GB332JA065	3.3K 1/10W	1	
	R5038	D0GBR00J0004	0 1/10W	1	
	R5039	D0GB225JA065	2.2M 1/10W	1	
	R5040	J0JGC0000063	INDUCTOR	1	
	R5041	D0GBR00J0004	0 1/10W	1	
	R6000	D0GBR00J0004	0 1/10W	1	
	R6003	D0GBR00J0004	0 1/10W	1	

Safety	Ref. No.	Part No.	Part Name & Description	Qty	Remarks
	R6004	D0GB101JA065	100 1/10W	1	
	R6007	D0GB103JA065	10K 1/10W	1	
	R6008	D0GB104JA065	100K 1/10W	1	
	R6010	D0GB222JA065	2.2K 1/10W	1	
	R6012	D0GBR00J0004	0 1/10W	1	
	R6020	D0GB821JA065	820 1/10W	1	
	R6021	D0GB122JA065	1.2K 1/10W	1	
	R6550	D0GB821JA065	820 1/10W	1	
	R6551	D0GB122JA065	1.2K 1/10W	1	
	R6801	D0GB153JA065	15K 1/10W	1	
	R6801	D0GB1R0JA065	1.0 1/10W	1	
	R6802	D0GB153JA065	15K 1/10W	1	
	R6802	D0GB203JA065	20K 1/10W	1	
	R6803	D0GB100JA065	10 1/10W	1	
	R6804	D0GB220JA065	22 1/10W	1	
	R6805	D0GBR00J0004	0 1/10W	1	
	R6806	D0GD473JA052	47K 1/8W	1	
	R6810	D0GA333JA023	33K 1/16W	1	
	R6810	D0GF390JA048	39 1/4W	1	
	R6811	D0GF390JA048	39 1/4W	1	
	R6812	D0GA103JA023	10K 1/16W	1	
	R6812	D0GB101JA065	100 1/10W	1	
	R6813	D0GA103JA023	10K 1/16W	1	
	R6813	D0GB101JA065	100 1/10W	1	
	R6814	D0GA222JA023	2.2K 1/16W	1	
	R6814	D0GB101JA065	100 1/10W	1	
	R6815	D0GA102JA023	1K 1/16W	1	
	R6815	D0GB272JA065	2.7K 1/10W	1	
	R6816	D0GA333JA023	33K 1/16W	1	
	R6816	D0GB472JA065	4.7K 1/10W	1	
	R6817	D0GB223JA065	22K 1/10W	1	
	R6818	D0GB473JA065	47K 1/10W	1	
	R6820	D0GA333JA023	33K 1/16W	1	
	R6822	D0GA103JA023	10K 1/16W	1	
	R6823	D0GA103JA023	10K 1/16W	1	
	R6826	D0GA333JA023	33K 1/16W	1	
	R6901	D0GB102JA065	1K 1/10W	1	
	R6902	D0GB152JA065	1.5K 1/10W	1	
	R6906	D0GB225JA065	2.2M 1/10W	1	
	R7230	D0GB104JA065	100K 1/10W	1	
	R8000	D0GB101JA065	100 1/10W	1	
	R8001	D0GB101JA065	100 1/10W	1	
	R8002	D0GB222JA065	2.2K 1/10W	1	
	R8003	D0GB222JA065	2.2K 1/10W	1	
	R8005	D0GB104JA065	100K 1/10W	1	
	R8006	D0GB104JA065	100K 1/10W	1	
	R8011	D0GB222JA065	2.2K 1/10W	1	
	R8012	D0GB222JA065	2.2K 1/10W	1	
	R8022	D0GB104JA065	100K 1/10W	1	
	R8024	D0GA103JA023	10K 1/16W	1	
	R8025	D0GA103JA023	10K 1/16W	1	
	R8026	D0GB472JA065	4.7K 1/10W	1	
	R8027	D0GB472JA065	4.7K 1/10W	1	
	R8029	D0GBR00J0004	0 1/10W	1	
	R8030	D1BA1002A022	10K 1/16W	1	
	R8031	D1BA1002A022	10K 1/16W	1	
	R8033	D1BA1002A022	10K 1/16W	1	HC397
	R8035	D0GA221JA023	220 1/16W	1	
	R8036	D0GA221JA023	220 1/16W	1	
	R8037	D0GA221JA023	220 1/16W	1	
	R8040	D0GB101JA065	100 1/10W	1	
	R8041	D0GB153JA065	15K 1/10W	1	HC395
	R8041	D0GB822JA065	8.2K 1/10W	1	HC397
	R8043	D1BB1002A074	10K 1/10W	1	
	R8044	D1BB1002A074	10K 1/10W	1	
	R8045	D0GB471JA065	470 1/10W	1	
	R8046	D0GB101JA065	100 1/10W	1	
	R8047	D0GB101JA065	100 1/10W	1	
	R8049	D0GB101JA065	100 1/10W	1	
	R8050	D0GB104JA065	100K 1/10W	1	
	R8051	D0GB103JA065	10K 1/10W	1	
	R8052	D0GB103JA065	10K 1/10W	1	
	R8053	D0GB334JA065	330K 1/10W	1	

Safety	Ref. No.	Part No.	Part Name & Description	Qty	Remarks
	R8054	D0GB223JA065	22K 1/10W	1	
	R8055	D0GB473JA065	47K 1/10W	1	
	R8056	J0JCC0000408	INDUCTOR	1	
	R8057	J0JCC0000397	INDUCTOR	1	
	R8058	J0JCC0000397	INDUCTOR	1	
	R8059	J0JCC0000408	INDUCTOR	1	
	R8060	J0JCC0000317	INDUCTOR	1	
	R8061	J0JCC0000317	INDUCTOR	1	
	R8062	F1H1H560B052	56pF 50V	1	
	R8063	F1H1H560B052	56pF 50V	1	
	R8064	D0GB222JA065	2.2K 1/10W	1	
	R8066	D1BB1502A074	15K 1/10W	1	
	R8067	ERJ3GEYF683V	68K 1/10W	1	
	R8068	D0GB104JA065	100K 1/10W	1	
	R8069	D0GB101JA065	100 1/10W	1	
	R8070	D0GB101JA065	100 1/10W	1	
	R8075	D0GB101JA065	100 1/10W	1	
	R8084	D0GB152JA065	1.5K 1/10W	1	
	R8085	D0GB152JA065	1.5K 1/10W	1	
	R8088	D0GA104JA023	100K 1/16W	1	
	R8090	D0GB105JA065	1M 1/10W	1	
	R8091	D0GB101JA065	100 1/10W	1	
	R8094	D0GB102JA065	1K 1/10W	1	
	R8095	D0GA106JA023	10M 1/16W	1	
	R8102	D0GB101JA065	100 1/10W	1	
	R8103	D0GBR00J0004	0 1/10W	1	
	R8106	D0GBR00J0004	0 1/10W	1	
	R8107	D0GB101JA065	100 1/10W	1	
	R8108	D0GBR00J0004	0 1/10W	1	
	R8110	D0GB333JA065	33K 1/10W	1	HC395
	R8112	D0GA101JA023	100 1/16W	1	
	R8113	D0GA101JA023	100 1/16W	1	
	R8114	D0GA101JA023	100 1/16W	1	
	R8115	D0GA101JA023	100 1/16W	1	
	R8600	D0GFR00J0005	0 1/4W	1	
			RESISTOR NET-WORKS		
	RX8001	D1H81014A042	RESISTOR NETWORK	1	
	RX8002	D1H81014A042	RESISTOR NETWORK	1	
	RX8003	D1H81014A042	RESISTOR NETWORK	1	
	RX8004	D1H81014A042	RESISTOR NETWORK	1	
	RX8005	D1H81014A042	RESISTOR NETWORK	1	
	RX8006	D1H81014A042	RESISTOR NETWORK	1	
	RX8007	J0JAD0000007	INDUCTOR	1	
	RX8008	J0JAD0000007	INDUCTOR	1	
	RX8009	J0JAD0000007	INDUCTOR	1	
	RX8010	D1H81034A042	RESISTOR NETWORK	1	
	RX8011	J0JAD0000007	INDUCTOR	1	
	RX8013	D1H81014A042	RESISTOR NETWORK	1	
			CAPACITORS		
	C51	F1H1H102B047	1000pF 50V	1	HC395
	C61	F1G1C104A077	0.1uF 16V	1	
	C62	F1G1C104A077	0.1uF 16V	1	
	C65	D0GBR00J0004	0 1/10W	1	
	C66	F1H1H330B052	33pF 50V	1	
	C67	F1H1H3R0B050	3.0pF 50V	1	
	C68	F1J1A106A043	10uF 10V	1	
	C69	F1J1A106A043	10uF 10V	1	
	C70	F1H1H101B052	100pF 50V	1	
	C71	F1H1H101B052	100pF 50V	1	
	C80	F1H1H103B047	0.01uF 50V	1	
	C401	F1H1A105A113	1uF 10V	1	
	C402	F1H1H101B052	100pF 50V	1	
	C403	F1H1A105A113	1uF 10V	1	
	C404	F1H1H120B052	12pF 50V	1	
	C405	F1H1H120B052	12pF 50V	1	
	C406	F1H1H273A918	0.027uF 50V	1	
	C407	F1H1H272A219	2700pF 50V	1	
	C408	F1H1H101B052	100pF 50V	1	

Safety	Ref. No.	Part No.	Part Name & Description	Qty	Remarks
	C409	F1H1A105A113	1uF 10V	1	
	C410	F2G1E2210026	220uF 25V	1	
	C411	F1J1E475A257	4.7uF 25V	1	
	C412	F1J1E105A287	1uF 25V	1	
	C413	F1K1E1060009	10uF 25V	1	
	C414	F1K1E1060009	10uF 25V	1	
	C415	F1J1E475A257	4.7uF 25V	1	
	C416	F1J1E475A257	4.7uF 25V	1	
	C417	F1J1E105A287	1uF 25V	1	
	C418	F1K1E1060009	10uF 25V	1	
	C419	F1K1E1060009	10uF 25V	1	
	C420	F1J1E475A257	4.7uF 25V	1	
	C421	F1H1H122B047	1200pF 50V	1	
	C422	F1H1H122B047	1200pF 50V	1	
	C423	F1H1H122B047	1200pF 50V	1	
	C424	F1H1H122B047	1200pF 50V	1	
	C425	F1J1H2240017	0.22uF 50V	1	
	C426	F1J1H2240017	0.22uF 50V	1	
	C427	F1J1H2240017	0.22uF 50V	1	
	C428	F1J1H2240017	0.22uF 50V	1	
	C429	F1J1A106A043	10uF 10V	1	
	C430	F1H1H101B052	100pF 50V	1	
	C431	F1H1H104B047	0.1uF 50V	1	
	C432	F1H1E105A153	1uF 25V	1	
	C433	F1J1A106A043	10uF 10V	1	
	C434	F1J1A106A043	10uF 10V	1	
	C435	F1H1H102B047	1000pF 50V	1	
	C436	F1H1H102B047	1000pF 50V	1	
	C437	F1H1H102B047	1000pF 50V	1	
	C438	F1H1H102B047	1000pF 50V	1	
	C439	F1G1H102A834	1000pF 50V	1	
	C444	F1H1H330B052	33pF 50V	1	
	C452	F1H1A105A113	1uF 10V	1	
	C453	F1H1H102B047	1000pF 50V	1	
	C455	F1K1V106A010	10uF 35V	1	
	C456	F1H1H104B047	0.1uF 50V	1	
	C457	F1K1V106A010	10uF 35V	1	
	C458	F1H1H104B047	0.1uF 50V	1	
	C941	F1H1A105A113	1uF 10V	1	
	C942	F1H1H101B052	100pF 50V	1	
	C950	F1H1H101B052	100pF 50V	1	HC397
	C951	F1H1H101B052	100pF 50V	1	HC397
	C952	F1H1H101B052	100pF 50V	1	HC397
	C953	F1H1H101B052	100pF 50V	1	HC397
	C954	F1H1A105A113	1uF 10V	1	HC397
	C955	F1H1A105A113	1uF 10V	1	HC397
	C956	F1H1A105A113	1uF 10V	1	HC397
	C957	F1H1A105A113	1uF 10V	1	HC397
	C958	F1H1H101B052	100pF 50V	1	HC397
	C959	F1H1H330B052	33pF 50V	1	HC397
	C960	F1H1H330B052	33pF 50V	1	HC397
	C961	F1H1H330B052	33pF 50V	1	HC397
	C962	F1H1C104A041	0.1uF 16V	1	HC397
	C1000	F1H1A105A113	1uF 10V	1	
	C1001	F1H1H102B047	1000pF 50V	1	
	C1010	F1H1H101B052	100pF 50V	1	
	C1011	F1H1H101B052	100pF 50V	1	
	C1012	F1H1H101B052	100pF 50V	1	
	C1100	F1H0J1060006	10uF 6.3V	1	
	C1101	F1H1A105A113	1uF 10V	1	
	C1109	F1H1H104B047	0.1uF 50V	1	
	C1119	F1H1H473A220	0.047uF 50V	1	
	C1121	F1K1E1060009	10uF 25V	1	
	C1122	F1K1E1060009	10uF 25V	1	
	C1123	F1K1E1060009	10uF 25V	1	
	C1124	F1K1E1060009	10uF 25V	1	
	C1135	F1K1C2260001	22uF 16V	1	
	C1136	F1K1C2260001	22uF 16V	1	
	C1138	F1H1H104B047	0.1uF 50V	1	
	C1139	F1H1H104B047	0.1uF 50V	1	
	C1140	F1H1H104B047	0.1uF 50V	1	
	C1150	F1K1C2260001	22uF 16V	1	
	C1151	F1H1H391A219	390pF 50V	1	

Safety	Ref. No.	Part No.	Part Name & Description		Qty	Remarks
	C1152	F1K1C2260001	22uF	16V	1	
	C1153	F1H1H102B047	1000pF	50V	1	
	C1169	F1H1A105A113	1uF	10V	1	
	C1181	F1J1E105A287	1uF	25V	1	
	C1182	F1H1C105A118	1uF	16V	1	
	C1183	F1H1H104B047	0.1uF	50V	1	
	C1184	F1J1E105A287	1uF	25V	1	
	C1185	F1H1C105A118	1uF	16V	1	
	C1191	F1H1H102B047	1000pF	50V	1	
	C1221	F1H1C105A118	1uF	16V	1	
	C1222	F1J1E105A287	1uF	25V	1	
	C1224	F1H1A105A113	1uF	10V	1	
	C1225	F1G1A1050004	1uF	10V	1	
	C1226	F1G1H101A834	100pF	50V	1	
	C1227	F1H1H101B052	100pF	50V	1	
	C1400	F1H1H102B047	1000pF	50V	1	
	C1700	F1H1H391A219	390pF	50V	1	
	C1701	F1K1V106A010	10uF	35V	1	
⚠	C1702	F0CAF224A105	0.22uF		1	
	C1703	F2A1E1020114	1000uF	25V	1	
	C1704	F1H1H102B047	1000pF	50V	1	
	C1705	F1K2J472A010	4700pF	630V	1	
	C1706	F2A2G820A354	82uF	400V	1	
	C1708	F1H1H102B047	1000pF	50V	1	
	C1709	F1H1H104B047	0.1uF	50V	1	
⚠	C1710	F1BAF471A215	470pF		1	
	C1712	F1H1H104B047	0.1uF	50V	1	
	C1713	F1K2J221A014	220pF	630V	1	
	C1714	F1H1H104B047	0.1uF	50V	1	
	C1715	F1H1H104B047	0.1uF	50V	1	
	C1716	F1H1H103B047	0.01uF	50V	1	
	C1719	F1H1E474A116	0.47uF	25V	1	
	C1720	F1K3D100A009	10pF	2000V	1	
⚠	C1725	F0CAF104A105	0.1uF		1	
⚠	C1727	F1BAF102A216	1000pF		1	
⚠	C1728	F1BAF102A216	1000pF		1	
	C5001	F1J1A106A043	10uF	10V	1	
	C5002	F1H1H103B047	0.01uF	50V	1	
	C5003	F1J1A106A043	10uF	10V	1	
	C5004	F1H1C104A041	0.1uF	16V	1	
	C5007	F1H1H222A219	2200pF	50V	1	
	C5008	F1H1H222A219	2200pF	50V	1	
	C5009	F1J1A106A043	10uF	10V	1	
	C5010	F1H1H103B047	0.01uF	50V	1	
	C5011	F1H1C104A041	0.1uF	16V	1	
	C5012	F1H1H102B047	1000pF	50V	1	
	C5019	F1J1A106A043	10uF	10V	1	
	C5020	F1H0J1060006	10uF	6.3V	1	
	C5021	F1H0J1060006	10uF	6.3V	1	
	C5022	F1H1H680A831	68pF	50V	1	
	C5023	F1H1H104B047	0.1uF	50V	1	
	C5024	F1H1H103B047	0.01uF	50V	1	
	C5025	F1J1A106A043	10uF	10V	1	
	C5054	D0GB103JA065	10K	1/10W	1	
	C6000	F1H1H104B047	0.1uF	50V	1	
	C6001	F1H1H103B047	0.01uF	50V	1	
	C6005	F1H1H101B052	100pF	50V	1	
	C6012	F1H1H104B047	0.1uF	50V	1	
	C6501	F1H1H101B052	100pF	50V	1	
	C6503	F1H1H104B047	0.1uF	50V	1	
	C6504	F1H1H101B052	100pF	50V	1	
	C6550	F1H1H104B047	0.1uF	50V	1	
	C6801	F1H1A105A113	1uF	10V	1	
	C6801	F1H1H472B047	4700pF	50V	1	
	C6802	F1H1H472B047	4700pF	50V	1	
	C6802	F1J1V1050001	1uF	35V	1	
	C6803	F1G1A1050004	1uF	10V	1	
	C6803	F1H1E105A153	1uF	25V	1	
	C6804	F1G1A1050004	1uF	10V	1	
	C6804	F1H1E105A153	1uF	25V	1	
	C6805	F1J1E105A287	1uF	25V	1	
	C6806	F1H1A105A113	1uF	10V	1	
	C6806	F2A1V470B125	47uF	35V	1	

Safety	Ref. No.	Part No.	Part Name & Description		Qty	Remarks
	C6807	F1H1A105A113	1uF	10V	1	
	C6807	F1H1E105A153	1uF	25V	1	
	C6808	F1H1E105A153	1uF	25V	1	
	C6810	F1G1A1050004	1uF	10V	1	
	C6811	F1G1C104A149	0.1uF	16V	1	
	C6812	F1H0J1060006	10uF	6.3V	1	
	C6812	F1J1V1050001	1uF	35V	1	
	C6813	F1H0J1060006	10uF	6.3V	1	
	C6813	F1J1E105A287	1uF	25V	1	
	C6814	F1J1E105A287	1uF	25V	1	
	C6816	F1H1H104B047	0.1uF	50V	1	
	C6820	F1G1A1050004	1uF	10V	1	
	C6830	F1H1A105A113	1uF	10V	1	
	C6900	F1H1H104B047	0.1uF	50V	1	
	C7231	F1H0J1060006	10uF	6.3V	1	
	C7232	F1G1C104A149	0.1uF	16V	1	
	C7233	F1G1A1050004	1uF	10V	1	
	C7234	F1G1A1050004	1uF	10V	1	
	C7235	F1G1C104A149	0.1uF	16V	1	
	C8000	F1H1C104A041	0.1uF	16V	1	
	C8001	F1H1C104A041	0.1uF	16V	1	
	C8002	F1H1H101B052	100pF	50V	1	
	C8003	F1H1H101B052	100pF	50V	1	
	C8004	F1H1C104A041	0.1uF	16V	1	
	C8005	F1H1H101B052	100pF	50V	1	
	C8006	F1G1H101A834	100pF	50V	1	
	C8007	F1H1C104A041	0.1uF	16V	1	
	C8008	F1H1C104A041	0.1uF	16V	1	
	C8009	F1H0J1060006	10uF	6.3V	1	
	C8010	F1H1H472B047	4700pF	50V	1	
	C8011	F1H1H472B047	4700pF	50V	1	
	C8013	F1H1H472B047	4700pF	50V	1	
	C8015	F1H1H102B047	1000pF	50V	1	
	C8016	F1H1H681A831	680pF	50V	1	
	C8017	F1J1A106A043	10uF	10V	1	
	C8018	F1H1C104A041	0.1uF	16V	1	
	C8018	F1H1H103B047	0.01uF	50V	1	
	C8019	F1H1A105A113	1uF	10V	1	
	C8019	F1J1A106A043	10uF	10V	1	
	C8020	F1H0J1060006	10uF	6.3V	1	
	C8020	F1H1C104A041	0.1uF	16V	1	
	C8021	F1H1C104A041	0.1uF	16V	1	
	C8022	F1H1A335A083	3.3uF	10V	1	
	C8023	F1H1C2240011	0.22uF	16V	1	
	C8024	F1H1C104A041	0.1uF	16V	1	
	C8025	F1H0J1060006	10uF	6.3V	1	
	C8026	F1H1H223B047	0.022uF	50V	1	
	C8029	F1H1H101B052	100pF	50V	1	
	C8030	F1H1H101B052	100pF	50V	1	
	C8031	F1G1C104A149	0.1uF	16V	1	
	C8032	F1G0J1050013	1uF	6.3V	1	
	C8033	F1H1H101B052	100pF	50V	1	
	C8034	F1H0J1060006	10uF	6.3V	1	
	C8035	F1H1H101B052	100pF	50V	1	
	C8036	F1H0J1060006	10uF	6.3V	1	
	C8037	F1H1H102B047	1000pF	50V	1	
	C8038	F1H1H101B052	100pF	50V	1	
	C8039	F1G1H270A834	27pF	50V	1	
	C8040	F1H1H330B052	33pF	50V	1	
	C8041	F1H1H100B051	10pF	50V	1	
	C8042	F1H1H100B051	10pF	50V	1	
	C8043	F1H1H104B047	0.1uF	50V	1	
	C8044	F1H1C104A041	0.1uF	16V	1	
	C8045	F1H1C104A041	0.1uF	16V	1	
	C8046	F1H1C104A041	0.1uF	16V	1	
	C8047	F1G1H101A834	100pF	50V	1	
	C8048	F1G1H101A834	100pF	50V	1	
	C8049	F1G1H101A834	100pF	50V	1	
	C8050	F1G1H101A834	100pF	50V	1	
	C8051	F1G1H101A834	100pF	50V	1	
	C8052	F1H1H101B052	100pF	50V	1	
	C8053	F1G1H101A834	100pF	50V	1	
	C8054	F1H1C224A178	0.22uF	16V	1	

Safety	Ref. No.	Part No.	Part Name & Description	Qty	Remarks
	C8060	F1G1C104A149	0.1uF 16V	1	
	C8061	F1H1H104B047	0.1uF 50V	1	
	C11371	F1H1H391A219	390pF 50V	1	
			SERVICE FIXTURE AND TOOLS		
	SFT1	REE1978	24P FFC (MAIN - CD INTERFACE)	1	
	SFT2	REX1538	7P WIRE (MAIN - SMPS)	1	

IPSG1602

A8935029