PSG1604007AE

Service Manual

CD Stereo System

Simplified

Model No. SA-MAX9000GM
SA-MAX9000GS

Product Color: (K)...Black Type

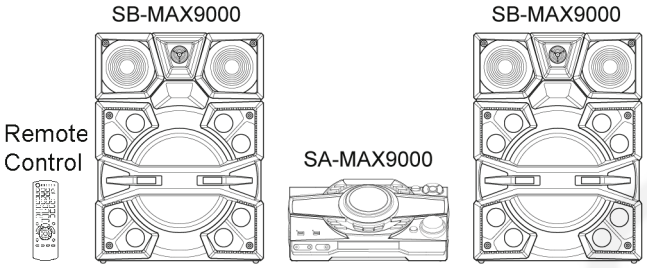

Notes: Please use this manual together with service manual Model No.(SA-MAX9000GN), Order No. PSG1602004CE.
• Speaker system (SB-MAX9000GN), Order No: PSG1602005CE
• Speaker system SB-MAX9000GS/GM, Order No: PSG1604029AE

⚠ WARNING

This service information is designed for experienced repair technicians only and is not designed for use by the general public. It does not contain warnings or cautions to advise non-technical individuals of potential dangers in attempting to service a product. Products powered by electricity should be serviced or repaired only by experienced professional technicians. Any attempt to service or repair the product or products dealt with in this service information by anyone else could result in serious injury or death.

IMPORTANT SAFETY NOTICE

There are special components used in this equipment which are important for safety. These parts are marked by ⚠ in the Schematic Diagrams, Circuit Board Diagrams, Exploded Views and Replacement Parts List. It is essential that these critical parts should be replaced with manufacturer's specified parts to prevent shock, fire or other hazards. Do not modify the original design without permission of manufacturer.

TABLE OF CONTENTS

PAGE

1 Notes ---------- **3**
2 Safety Precautions ---------- **3**
2.1. General Guidelines ---------- 3
2.2. Before Repair and Adjustment ---------- 4
2.3. Protection Circuitry ---------- 4
2.4. Caution For AC Cord ---------- 5
2.5. Safety Parts Information ---------- 6
3 Specifications ---------- **7**
4 Block Diagram ---------- **9**
4.1. Audio ---------- 9
5 Schematic Diagram ---------- **11**
5.1. Main (IO Expansion) Circuit ---------- 11
5.2. Main (Micon) Circuit ---------- 12
5.3. Main (USB) Circuit ---------- 13
5.4. Main (AUX) Circuit ---------- 14
5.5. Tuner Circuit ---------- 15
5.6. Panel Circuit ---------- 16
5.7. Mic Circuit ---------- 17

Panasonic®

© Panasonic Corporation 2016. All rights reserved. Unauthorized copying and distribution is a violation of law.

5.8. USB Circuit ---------- 18
5.9. SMPS Circuit ---------- 19
6 Printed Circuit Board ---------- 20
6.1. Main P.C.B. (Side A)---------- 20
6.2. Main P.C.B. (Side B)---------- 21
6.3. Tuner, Mic and USB P.C.B. ---------- 22
6.4. Panel P.C.B. ---------- 23
6.5. SMPS P.C.B. ---------- 24
7 Exploded View and Replacement Parts List ---------- 25
7.1. Cabinet Parts Location 1 ---------- 25
7.2. Cabinet Parts Location 2 ---------- 26
7.3. Cabinet Parts Location 3 ---------- 27
7.4. Packaging ---------- 28
7.5. Mechanical Replacement Part List ---------- 29
7.6. Electrical Replacement Part List ---------- 31

A0449860

1 Notes

This simplified service manual is base on SA-MAX9000GN/PU (Order No. PSG1602004CE).

1) This service manual contains only following information

- Safety Precautions
- Specifications
- Block Diagram
- Schematic Diagram
- Printed Circuit Board
- Exploded View and Replacement Parts List

2 Safety Precautions

2.1. General Guidelines

1. **IMPORTANT SAFETY NOTICE**

   There are special components used in this equipment which are important for safety. These parts are marked by ⚠ in the Schematic Diagrams, Circuit Board Layout, Exploded Views and Replacement Parts List. It is essential that these critical parts should be replaced with manufacturer's specified parts to prevent X-RADIATION, shock, fire, or other hazards. Do not modify the original design without permission of manufacturer.

2. An Isolation Transformer should always be used during the servicing of AC Adaptor whose chassis is not isolated from the AC power line. Use a transformer of adequate power rating as this protects the technician from accidents resulting in personal injury from electrical shocks. It will also protect AC Adaptor from being damaged by accidental shorting that may occur during servicing.
3. When servicing, observe the original lead dress. If a short circuit is found, replace all parts which have been overheated or damaged by the short circuit.
4. After servicing, see to it that all the protective devices such as insulation barriers, insulation papers shields are properly installed.
5. After servicing, make the following leakage current checks to prevent the customer from being exposed to shock hazards.

2.1.1. Leakage Current Cold Check

1. Unplug the AC cord and connect a jumper between the two prongs on the plug.
2. Measure the resistance value, with an ohmmeter, between the jumpered AC plug and each exposed metallic cabinet part on the equipment such as screwheads, connectors, control shafts, etc. When the exposed metallic part has a return path to the chassis, the reading should be between 1MΩ and 5.2MΩ.

   When the exposed metal does not have a return path to the chassis, the reading must be ∞

2.1.2. Leakage Current Hot Check

1. Plug the AC cord directly into the AC outlet. Do not use an isolation transformer for this check.
2. Connect a 1.5kΩ, 10 watts resistor, in parallel with a 0.15μF capacitors, between each exposed metallic part on the set and a good earth ground such as a water pipe, as shown in Figure 1-1.
3. Use an AC voltmeter, with 1000 ohms/volt or more sensitivity, to measure the potential across the resistor.
4. Check each exposed metallic part, and measure the voltage at each point.
5. Reverse the AC plug in the AC outlet and repeat each of the above measurements.
6. The potential at any point should not exceed 0.75 volts RMS. A leakage current tester (Simpson Model 229 or equivalent) may be used to make the hot checks, leakage current must not exceed 1/2 milliamp. In case a measurement is outside of the limits specified, there is a possibility of a shock hazard, and the equipment should be repaired and rechecked before it is returned to the customer.

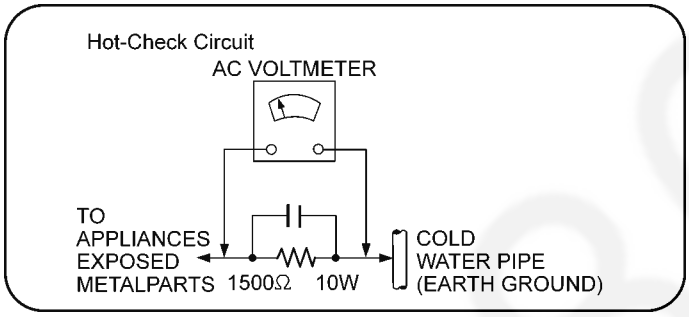

Figure 1-1

2.2. Before Repair and Adjustment

Disconnect AC power to discharge AC Capacitors (C1003, C1004, C1005, C1007, C1008, C1009, C1010) through a 10 Ω, 10 W resistor to ground.

Caution:

DO NOT SHORT-CIRCUIT DIRECTLY (with a screwdriver blade, for instance), as this may destroy solid state devices.

After repairs are completed, restore power gradually using a variac to avoid overcurrent.

Current consumption at AC 220~240 V, 50/60 Hz in Power ON, FM Tuner at volume minimal mode should be ~ 750 mA.

2.3. Protection Circuitry

The protection circuitry may have operated if either of the following conditions are noticed:

- No sound is heard when the power is turned on.
- Sound stops during a performance.

The function of this circuitry is to prevent circuitry damage if, for example, the positive and negative speaker connection wires are “shorted”, or if speaker systems with an impedance less than the indicated rated impedance of the amplifier are used.

If this occurs, follow the procedure outlines below:

1. Turn off the power.
2. Determine the cause of the problem and correct it.
3. Turn on the power once again after one minute.

Note:

When the protection circuitry functions, the unit will not operate unless the power is first turned off and then on again.

2.4. Caution For AC Cord

For your safety, please read the following text carefully.

This appliance is supplied with a moulded three pin mains plug for your safety and convenience.
A 5-ampere fuse is fitted in this plug.
Should the fuse need to be replaced please ensure that the replacement fuse has a rating of 5-ampere and that it is approved by ASTA or BSI to BS1362.
Check for the ASTA mark ◈ or the BSI mark ⊛ on the body of the fuse.

If the plug contains a removable fuse cover you must ensure that it is refitted when the fuse is replaced.
If you lose the fuse cover the plug must not be used until a replacement cover is obtained.
A replacement fuse cover can be purchased from your local dealer.

CAUTION!
IF THE FITTED MOULDED PLUG IS UNSUITABLE FOR THE SOCKET OUTLET IN YOUR HOME THEN THE FUSE SHOULD BE REMOVED AND THE PLUG CUT OFF AND DISPOSED OF SAFELY.
THERE IS A DANGER OF SEVERE ELECTRICAL SHOCK IF THE CUT OFF PLUG IS INSERTED INTO ANY 13-AMPERE SOCKET.

If a new plug is to be fitted please observe the wiring code as stated below.
If in any doubt please consult a qualified electrician.

IMPORTANT
The wires in this mains lead are coloured in accordance with the following code:
Blue: Neutral, Brown: Live.
As these colours may not correspond with the coloured markings identifying the terminals in your plug, proceed as follows:
The wire which is coloured Blue must be connected to the terminal which is marked with the letter N or coloured Black or Blue.
The wire which is coloured Brown must be connected to the terminal which is marked with the letter L or coloured Brown or Red.

WARNING: DO NOT CONNECT EITHER WIRE TO THE EARTH TERMINAL WHICH IS MARKED WITH THE LETTER E, BY THE EARTH SYMBOL ⏚ OR COLOURED GREEN OR GREEN/YELLOW.

THIS PLUG IS NOT WATERPROOF—KEEP DRY.

Before use
Remove the connector cover.

How to replace the fuse
The location of the fuse differ according to the type of AC mains plug (figures A and B). Confirm the AC mains plug fitted and follow the instructions below.
Illustrations may differ from actual AC mains plug.

1. Open the fuse cover with a screwdriver.

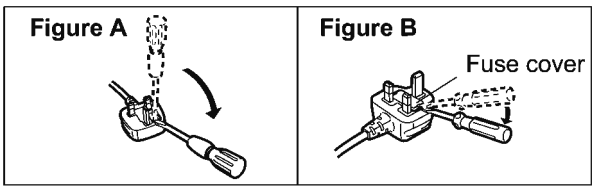

2. Replace the fuse and close or attach the fuse cover.

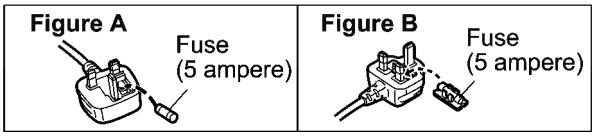

Figure 1-3

2.5. Safety Parts Information

Safety Parts List:

There are special components used in this equipment which are important for safety.

These parts are marked by ⚠ in the Schematic Diagrams, Exploded View & Replacement Parts List. It is essential that these critical parts should be replaced with manufacturer's specified parts to prevent shock, fire or other hazards. Do not modify the original design without permission of manufacturer.

Safety	Ref No.	Part No.	Part Name & Description	Remarks
⚠	19	RKM0771-K	TOP CABINET	
⚠	301	RAE1052Z-V	TRAVERSE ASS'Y	(E.S.D)
⚠	A1	RFA3678	AC CORD UNIT	
⚠	A1	K2CP2YY00071	AC CORD	
⚠	A1	K2CT2YY00103	AC CORD	
⚠	A3	RQT0A66-G	O/I BOOK (En,Cn)	
⚠	14	RGR0484B-A	REAR PANEL	
⚠	PCB7	REP5317D	SMPS P.C.B	(RTL)
⚠	DZ1001	D4EAY511A127	VARISTOR	(E.S.D)
⚠	L1001	G0B333K00001	LINE FILTER	
⚠	L1002	G0B183J00002	LINE FILTER	
⚠	T1401	G4DYA0000688	TRANSFORMER	
⚠	T1501	G4DYA0000784	TRANSFORMER	
⚠	F1001	K5D103BNA005	FUSE	
⚠	F1401	K5G501YA0081	FUSE	
⚠	F1501	K5G502YA0159	FUSE	
⚠	P1001	K2AZYA000005	AC INLET	
⚠	C1003	F1BAF1020030	1000pF	SMPS
⚠	C1004	F1BAF1020030	1000pF	SMPS
⚠	C1005	F1BAF1020030	1000pF	SMPS
⚠	C1007	F1BAF4710005	470pF	SMPS
⚠	C1008	F1BAF4710005	470pF	SMPS
⚠	C1009	F0CAF105A105	1uF	SMPS
⚠	C1010	F0CAF104A105	0.1uF	SMPS

A044960

3 Specifications

■ **Amplifier section**

RMS output power stereo mode

High Ch	500 W per channel (3 Ω), 1 kHz, 30% THD
Mid Ch	500 W per channel (3 Ω), 1 kHz, 30% THD
Low Ch	1000 W per channel (5 Ω), 100 Hz, 30% THD
Total RMS stereo mode power	4000 W

■ **Tuner**

Frequency modulation (FM)

Frequency range	87.50 MHz to 108.00 MHz (50 kHz step)
Preset memory	AM 15 stations
Antenna terminals	75 Ω (unbalanced)

Amplitude modulation (AM)

Frequency range	522 kHz to 1629 kHz (9 kHz step) 520 kHz to 1630 kHz (10 kHz step)

■ **Disc section**

Disc played (8 cm or 12 cm)

CD, CD-R/RW (CD-DA, MP3*)

*MPEG-1 Layer 3, MPEG-2 Layer 3

Pick up

Wavelength	790 nm(CD)

■ **Buetooth® section**

Version	Bluetooth® 2.1 + EDR
Class	Class 2
Supported profiles	A2DP, AVRCP, SPP, OPP, FTP
Operating frequency	2.4 GHz band FH-SS
Operation distance	10 m line of sight

■ **Internal memory section**

Memory

Memory size	4 GB
Media file format support	MP3 (*.mp3)

Memory recording

Bit rate	128 kbps
Memory recording speed	1x, 3x max (CD only)
Recording file format	MP3 (*.mp3)

■ **Terminal section**

USB port

USB standard	USB 2.0 full speed
Media file format support	MP3 (*.mp3)
USB device file system	FAT12, FAT16, FAT32

USB recording

Bit rate	128 kbps
USB recording speed	1x, 3x (CD only)
Recording file format	MP3 (*.mp3)

AUX IN 1, 2, 3

Audio input	Pin jack

AUX IN 4

Terminal	Stereo, 3.5 mm jack

Microphone

Terminal	Mono, 6.3 mm jack (2 systems)

■ **Speaker section**

Speaker unit(s)

Tweeter	6 cm cone type x 1
Woofer	16 cm cone type x 2
Super Woofer	38 cm cone type x 1
Impedance	High 3 Ω / Mid 3 Ω / Low 5 Ω
Dimensions (W x H x D)	
Including speaker feet	572 mm x 782 mm x 528 mm
Excluding speaker feet	572 mm x 774 mm x 528 mm
Mass	37 kg

■ **General**

Power supply	AC 220 V to 240 V, 50/60 Hz
Power consumption	340 W
Dimensions (W x H x D)	460 mm x 234 mm x 409 mm
Mass	6.0 kg
Operating temperature range	0 °C to +40 °C
Operating humidity range	35% to 80% RH (no condensation)
Power consumption in standby mode (approximate)	0.4 W
Power consumption in standby mode (approximate) (With “BLUETOOTH STANDBY” set to “ON”)	0.5 W

Note:

1. Specifications are subject to change without notice. Mass and dimension are approximate.
2. Total harmonic distortion is measured by the digital spectrum analyzer.

■ System: SC-MAX9000GM

Main Unit: SA-MAX9000GM
Speaker System: SB-MAX9000GM

■ System: SC-MAX9000GS

Main Unit: SA-MAX9000GS
Speaker System: SB-MAX9000GS

A04498660

4 Block Diagram

4.1. Audio

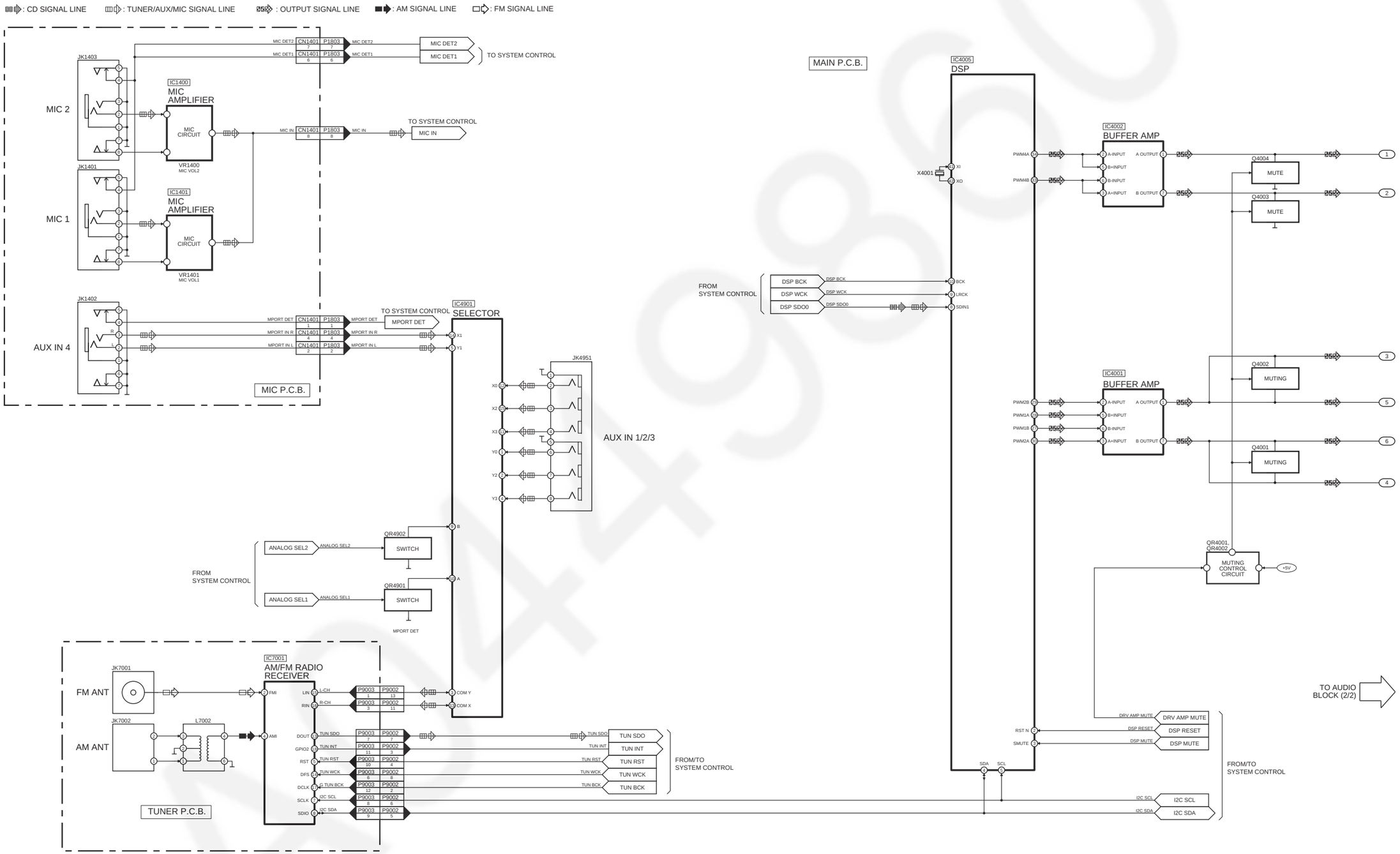

SA-MAX9000GM/GS AUDIO (1/2) BLOCK DIAGRAM

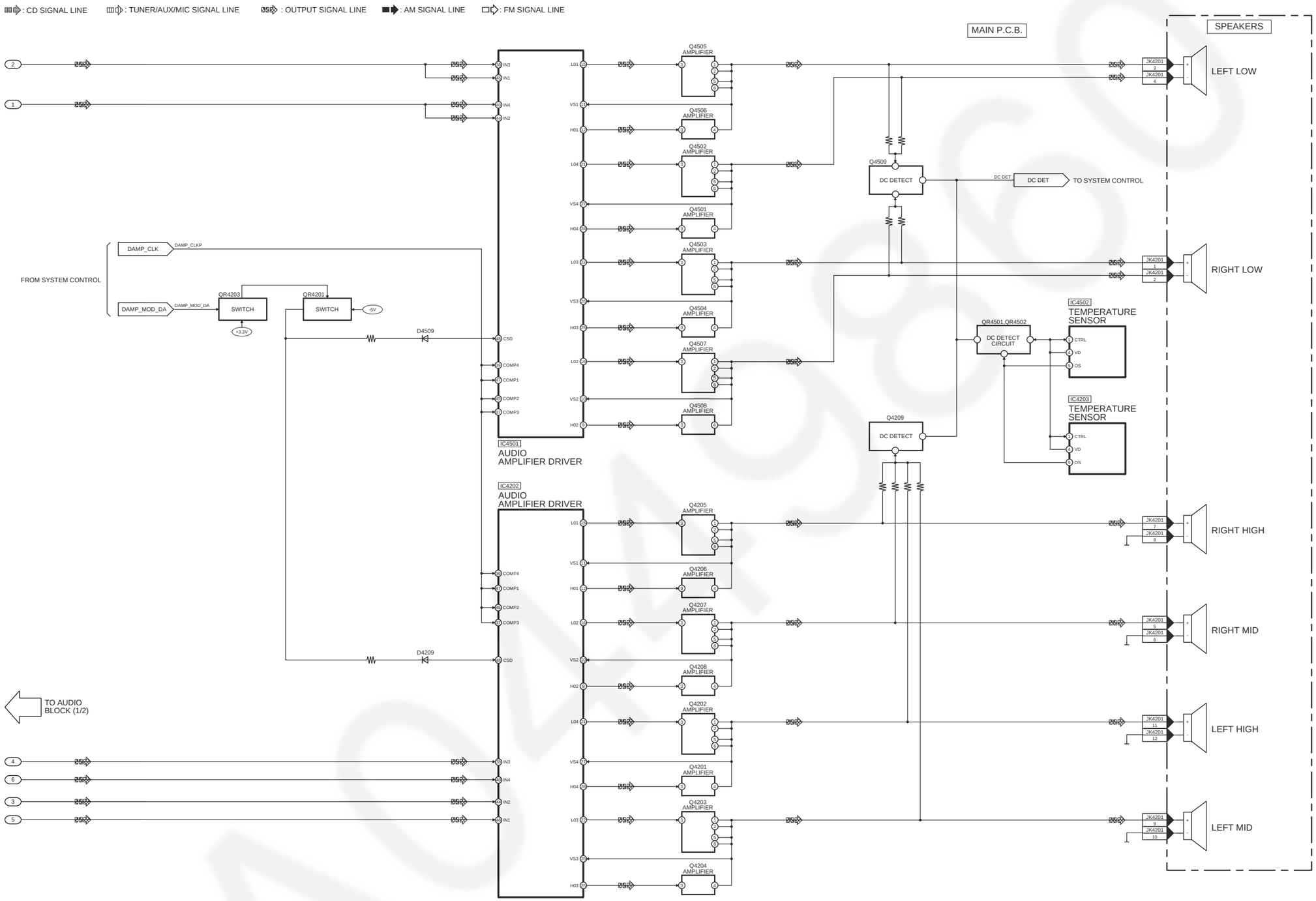

SA-MAX9000GM/GS AUDIO (2/2) BLOCK DIAGRAM

5 Schematic Diagram

5.1. Main (IO Expansion) Circuit

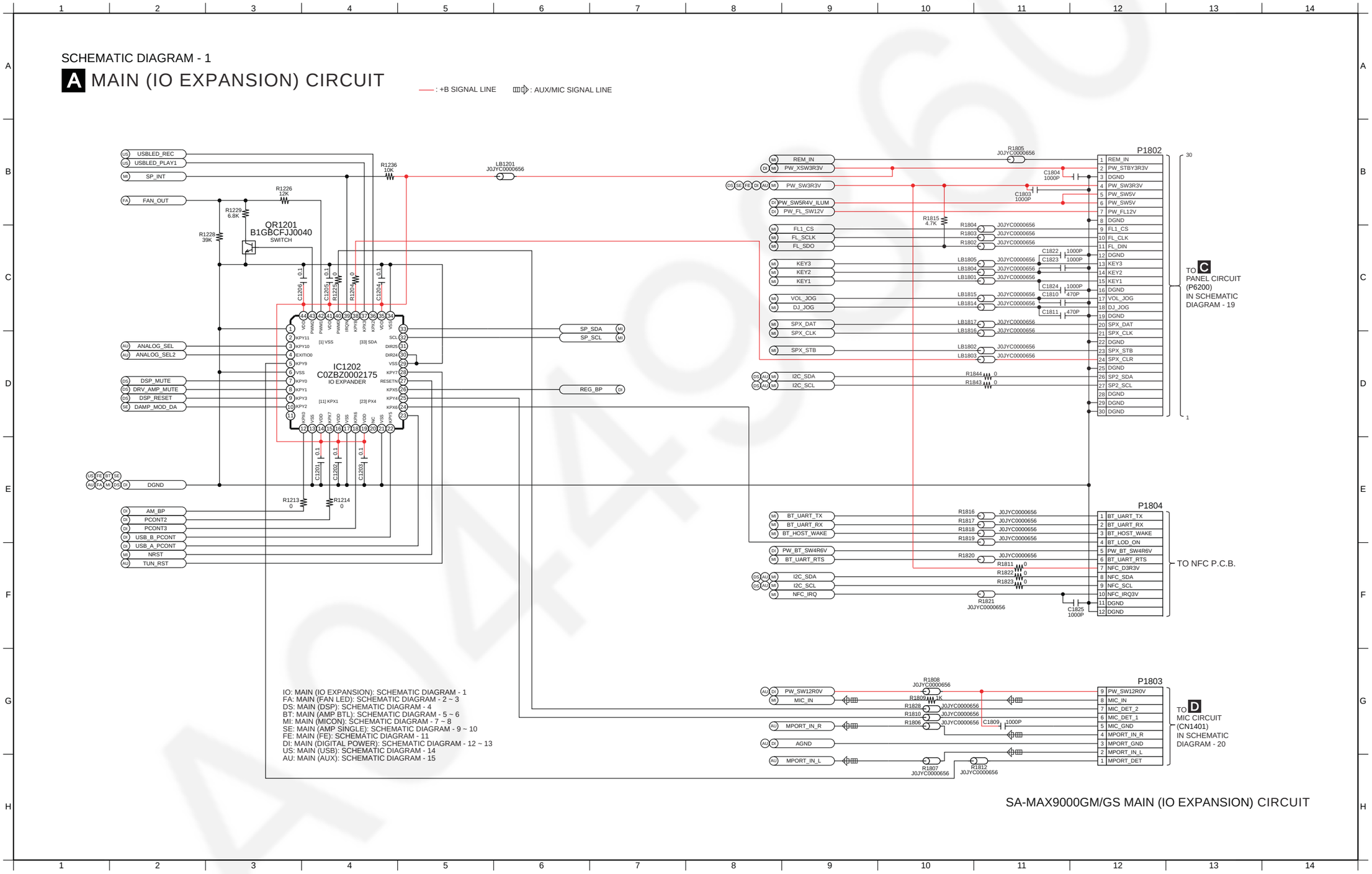

5.2. Main (Micon) Circuit

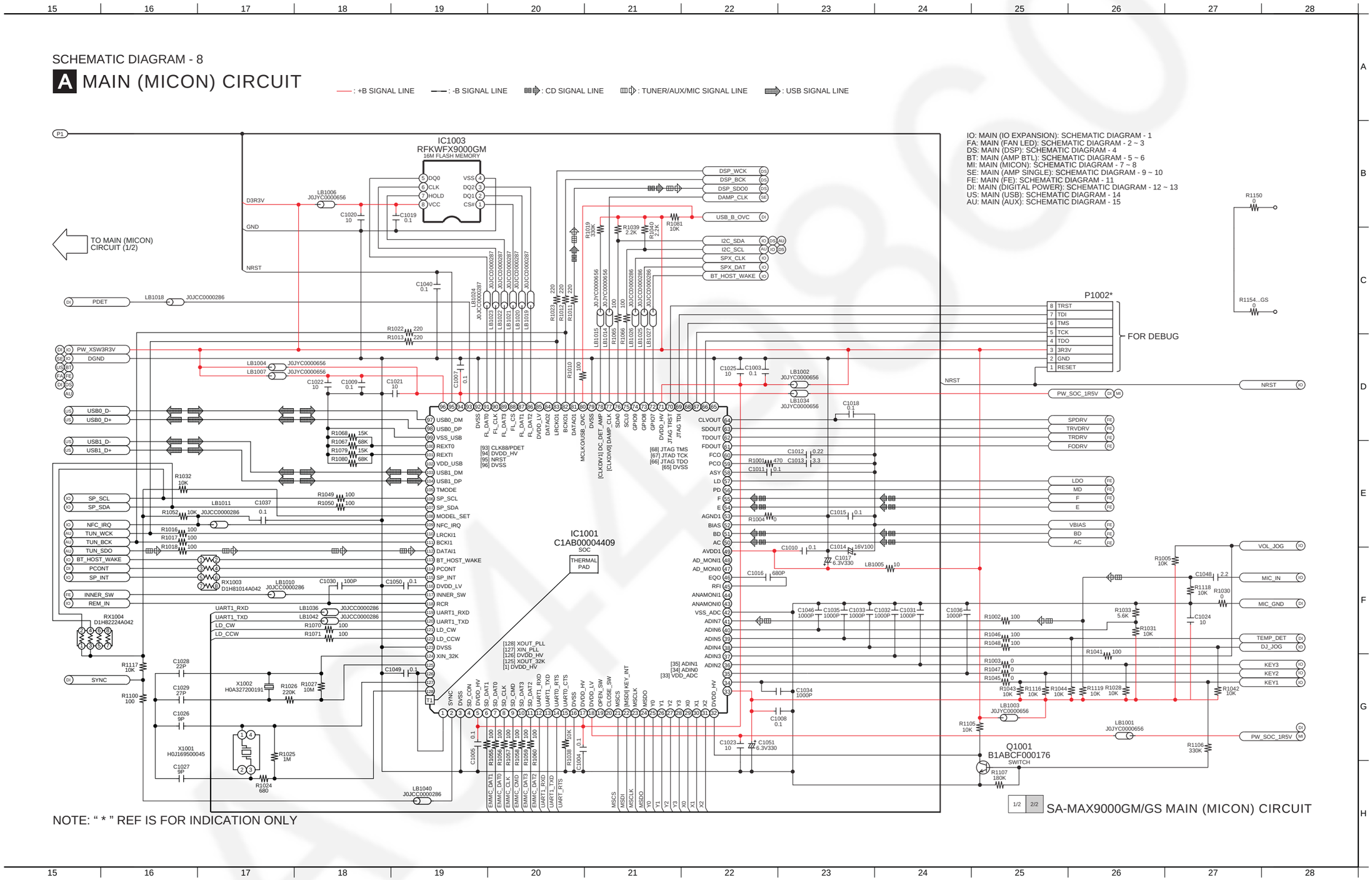

5.3. Main (USB) Circuit

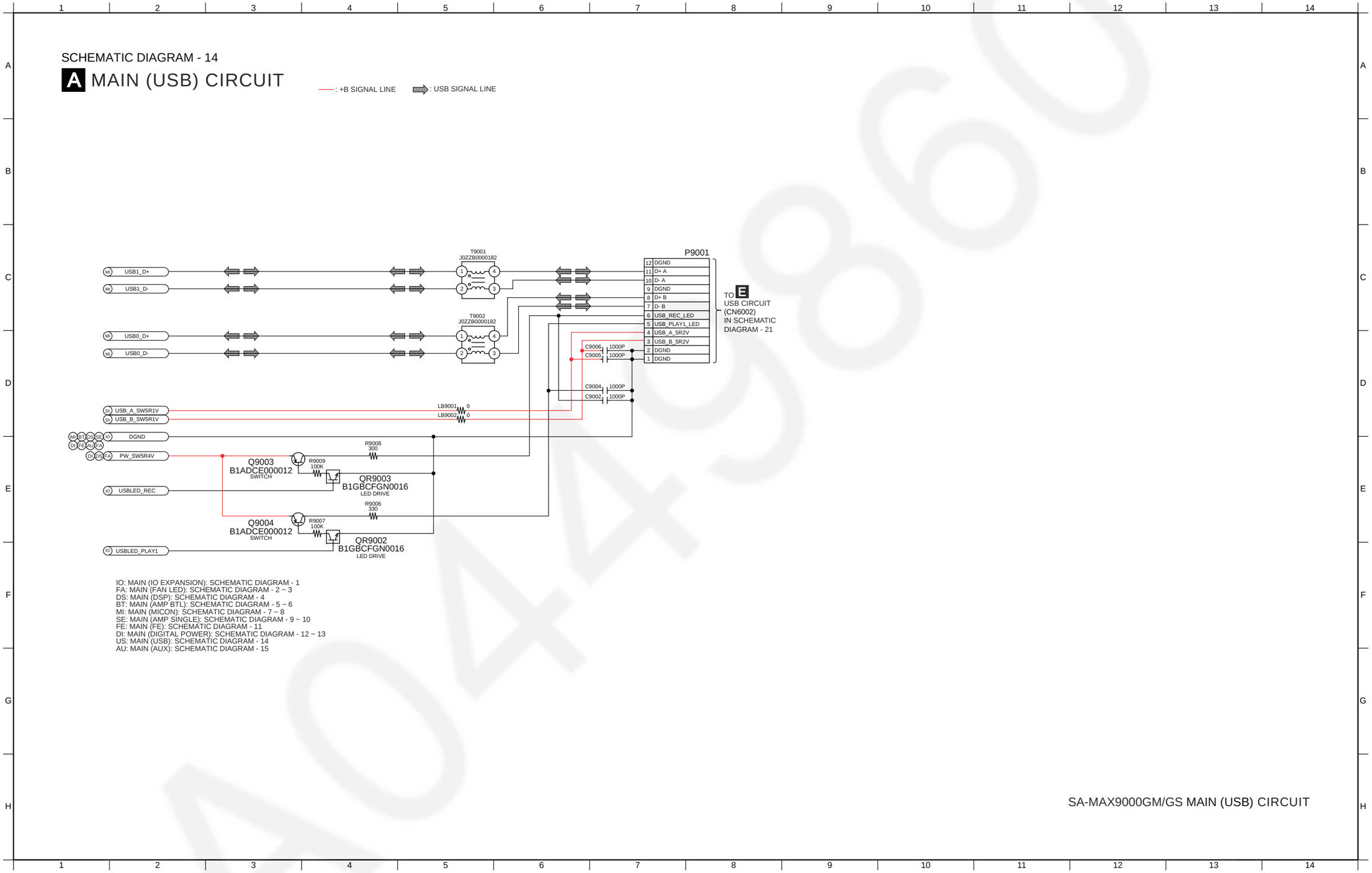

A0440860

5.4. Main (AUX) Circuit

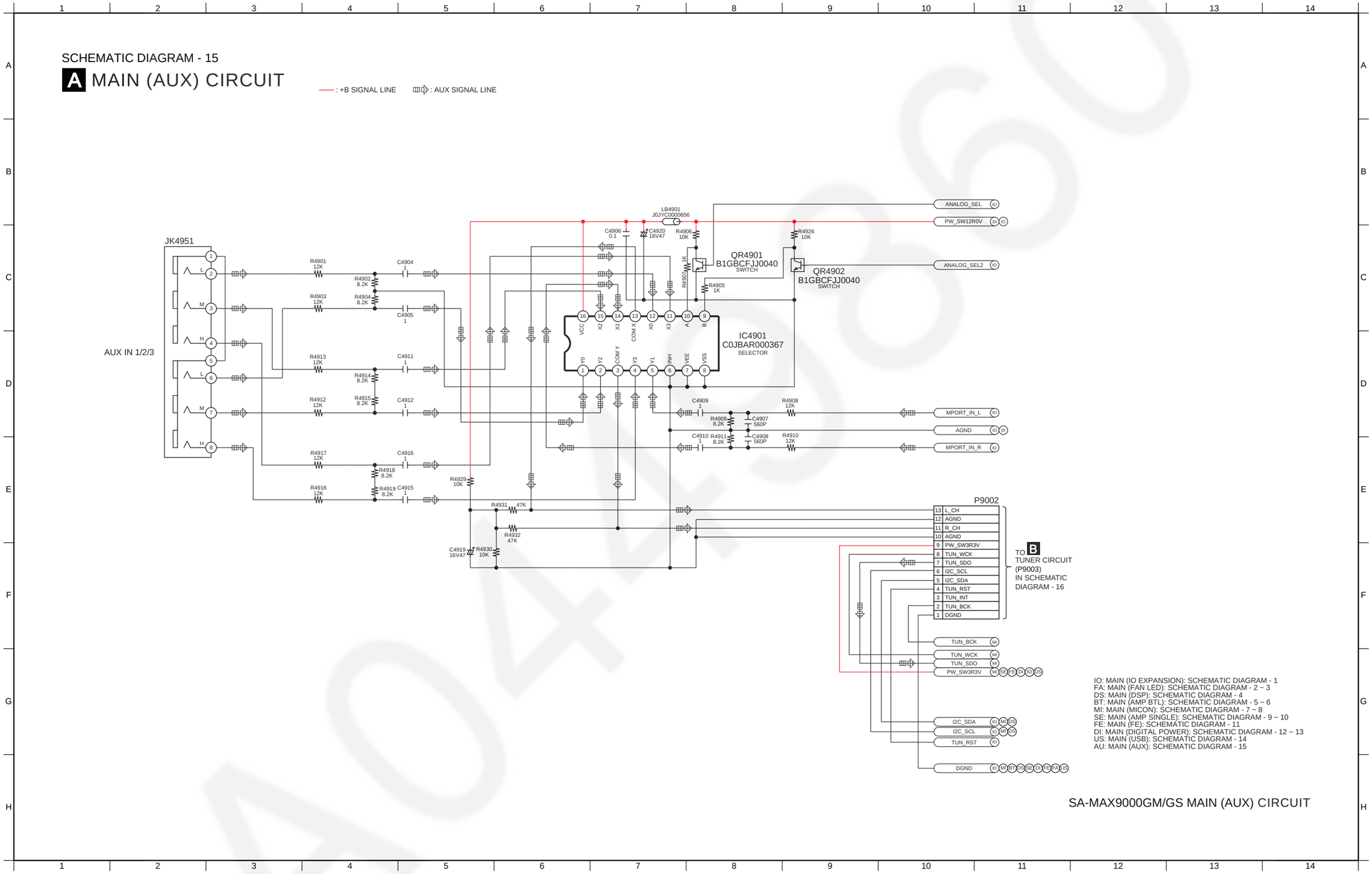

5.5. Tuner Circuit

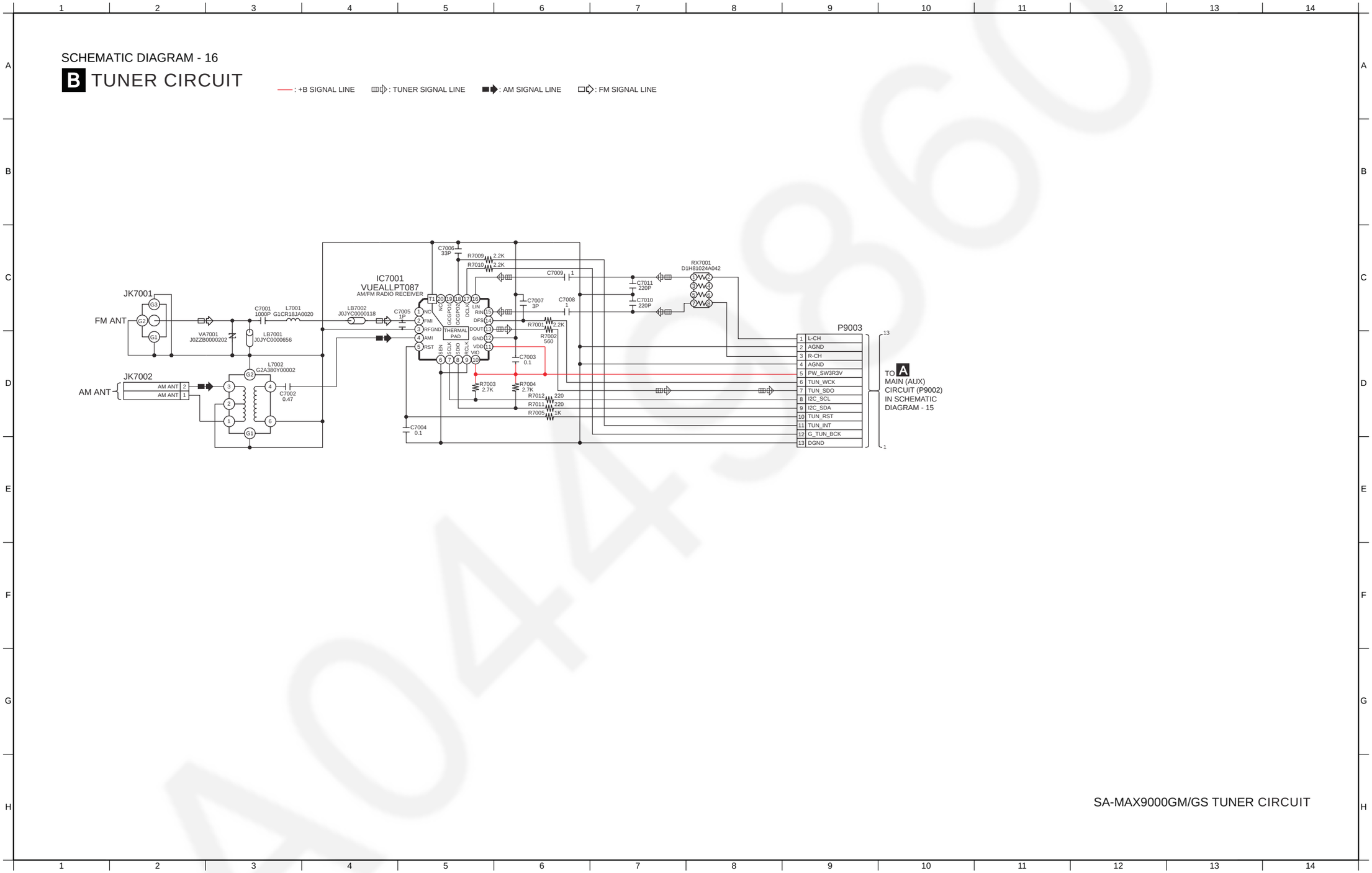

A0445860

5.6. Panel Circuit

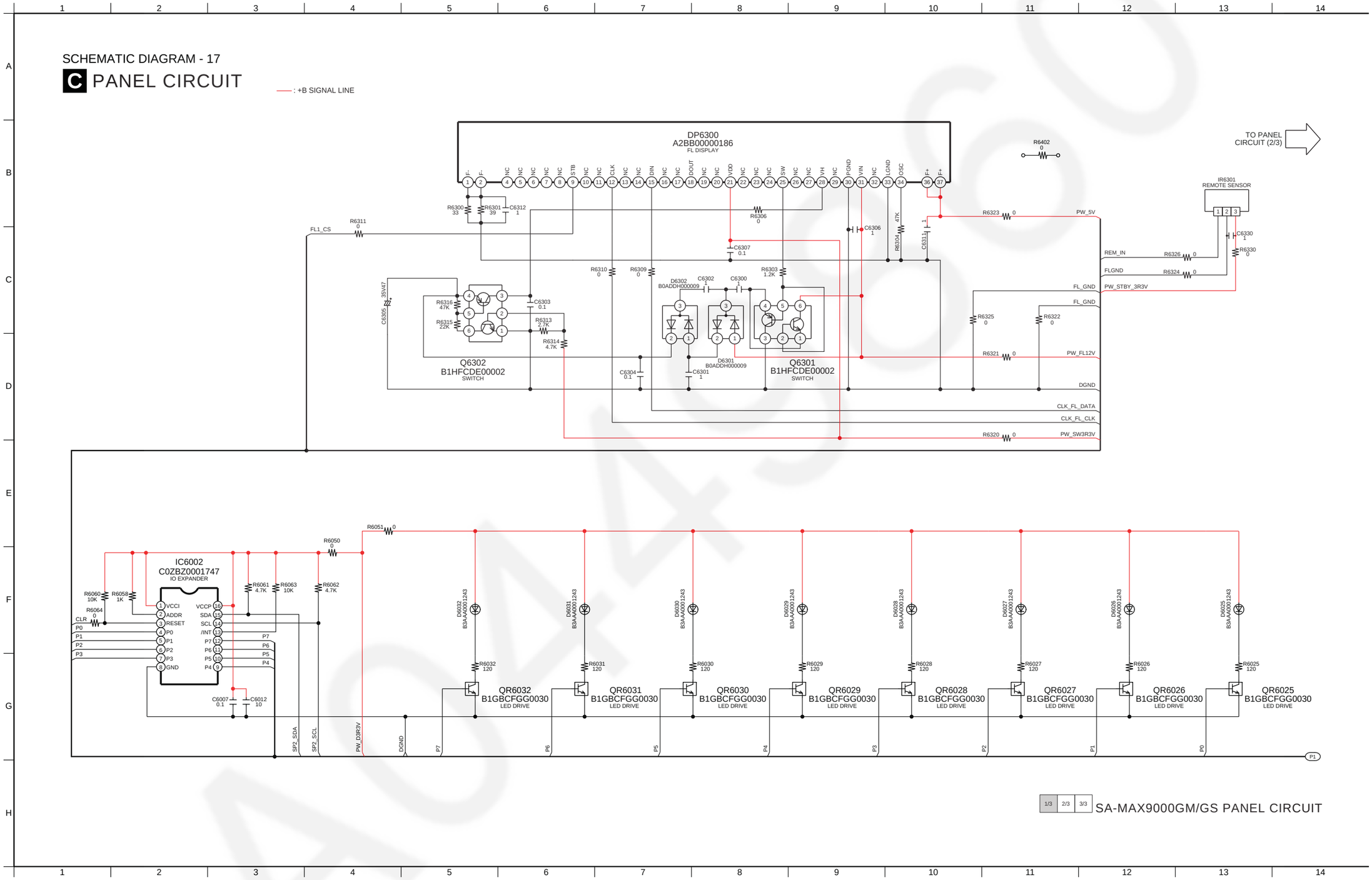

5.7. Mic Circuit

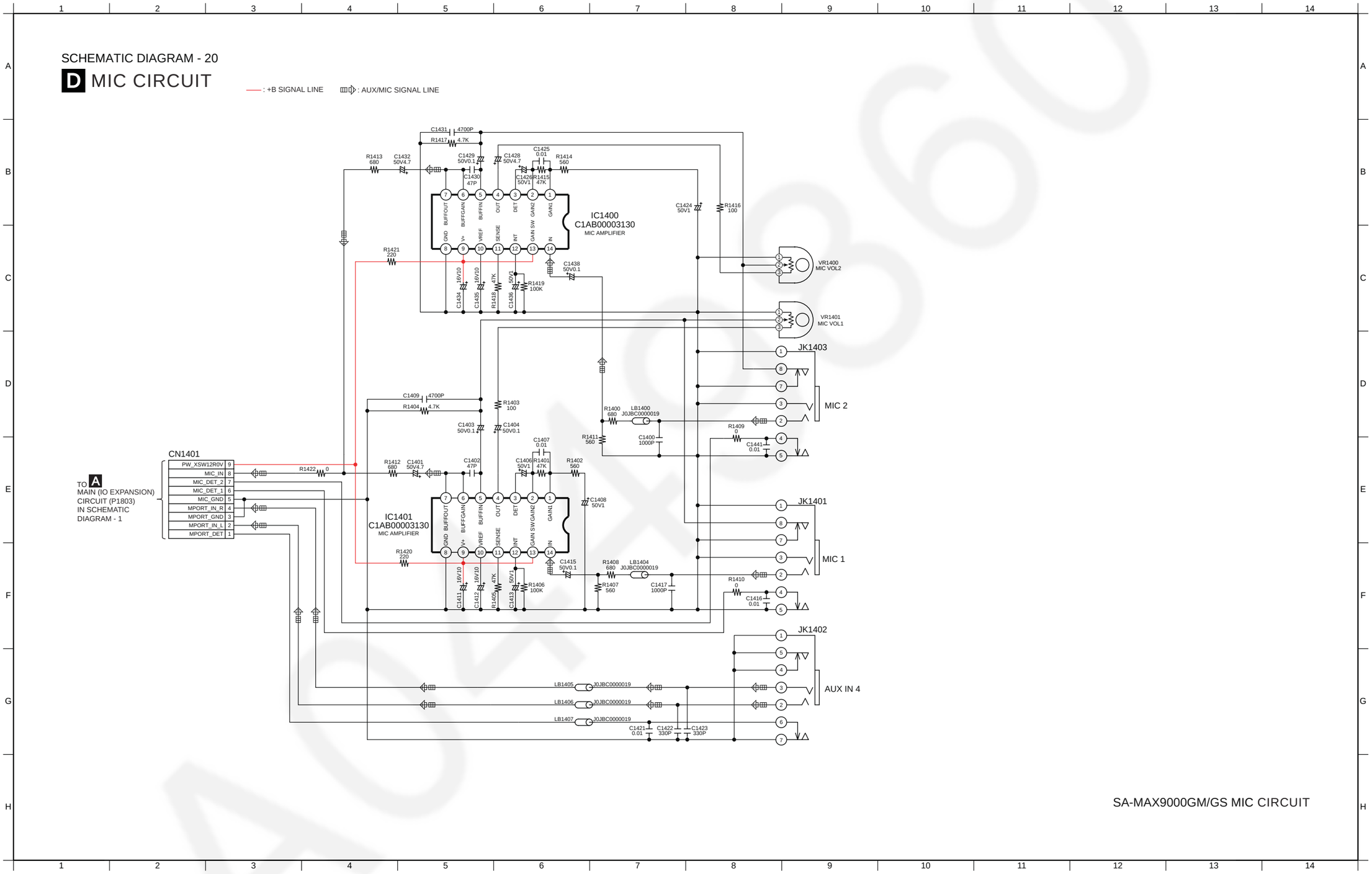

5.8. USB Circuit

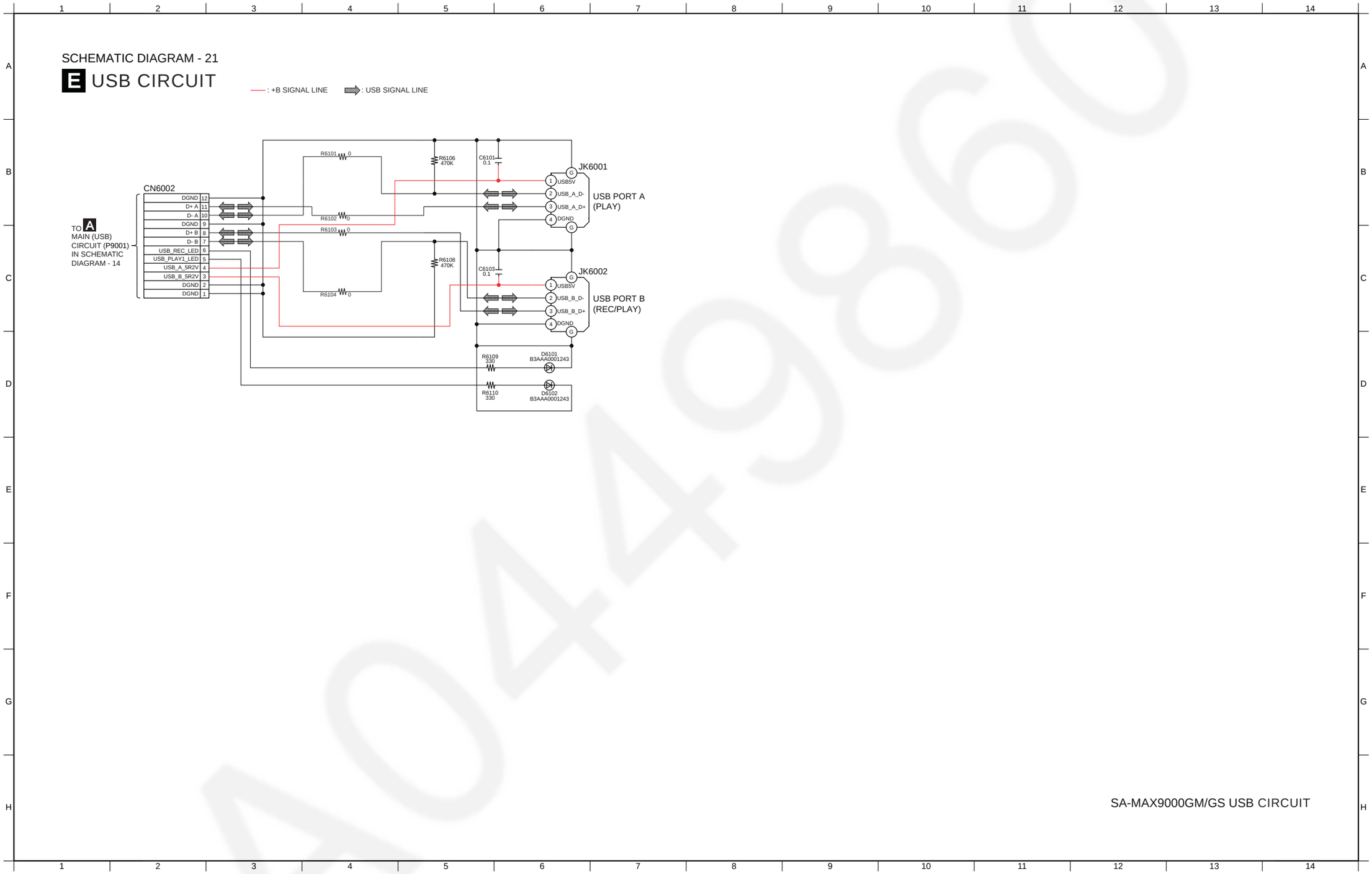

A0449860

5.9. SMPS Circuit

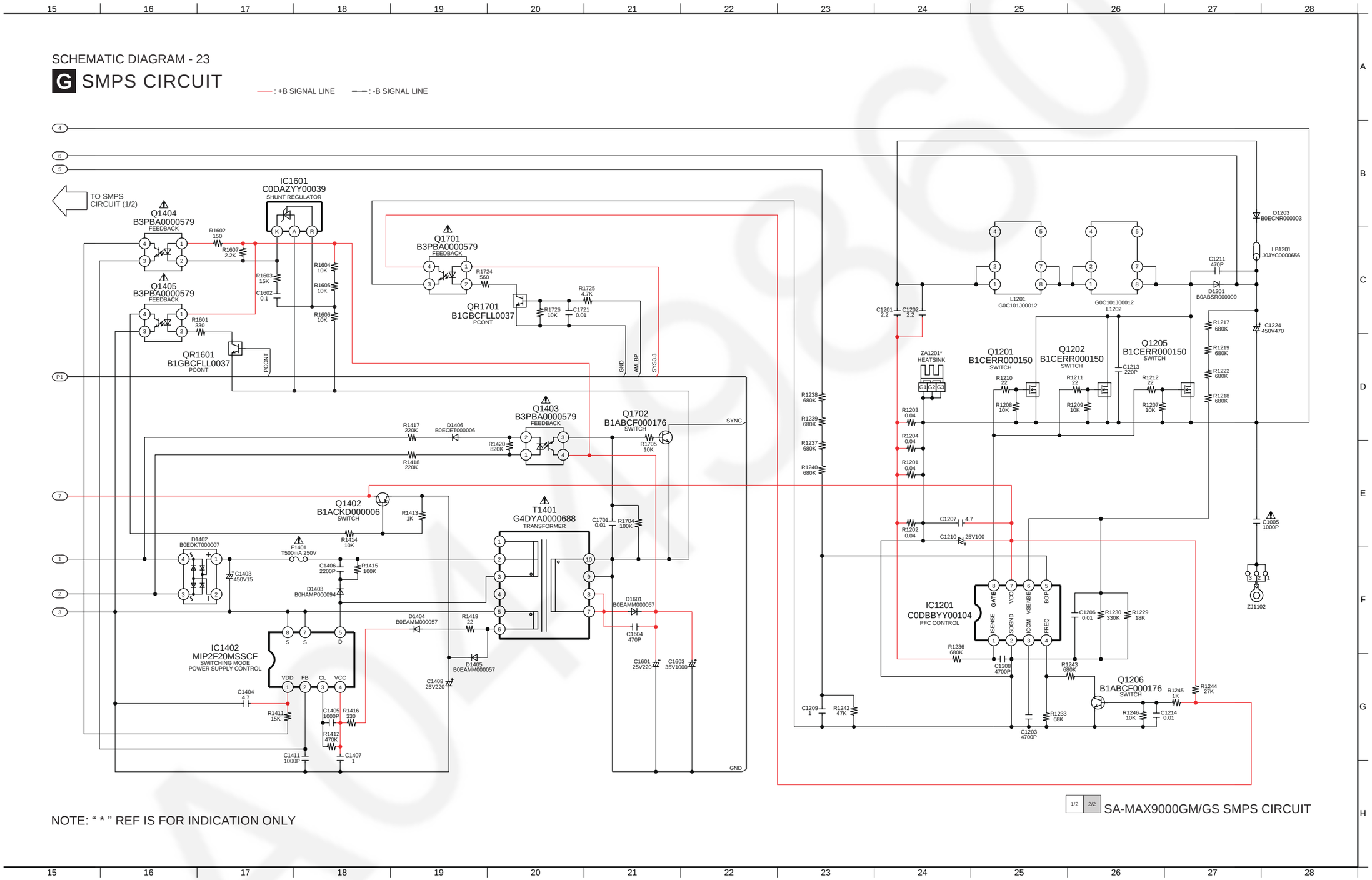

NOTE: " * " REF IS FOR INDICATION ONLY

6 Printed Circuit Board

6.1. Main P.C.B. (Side A)

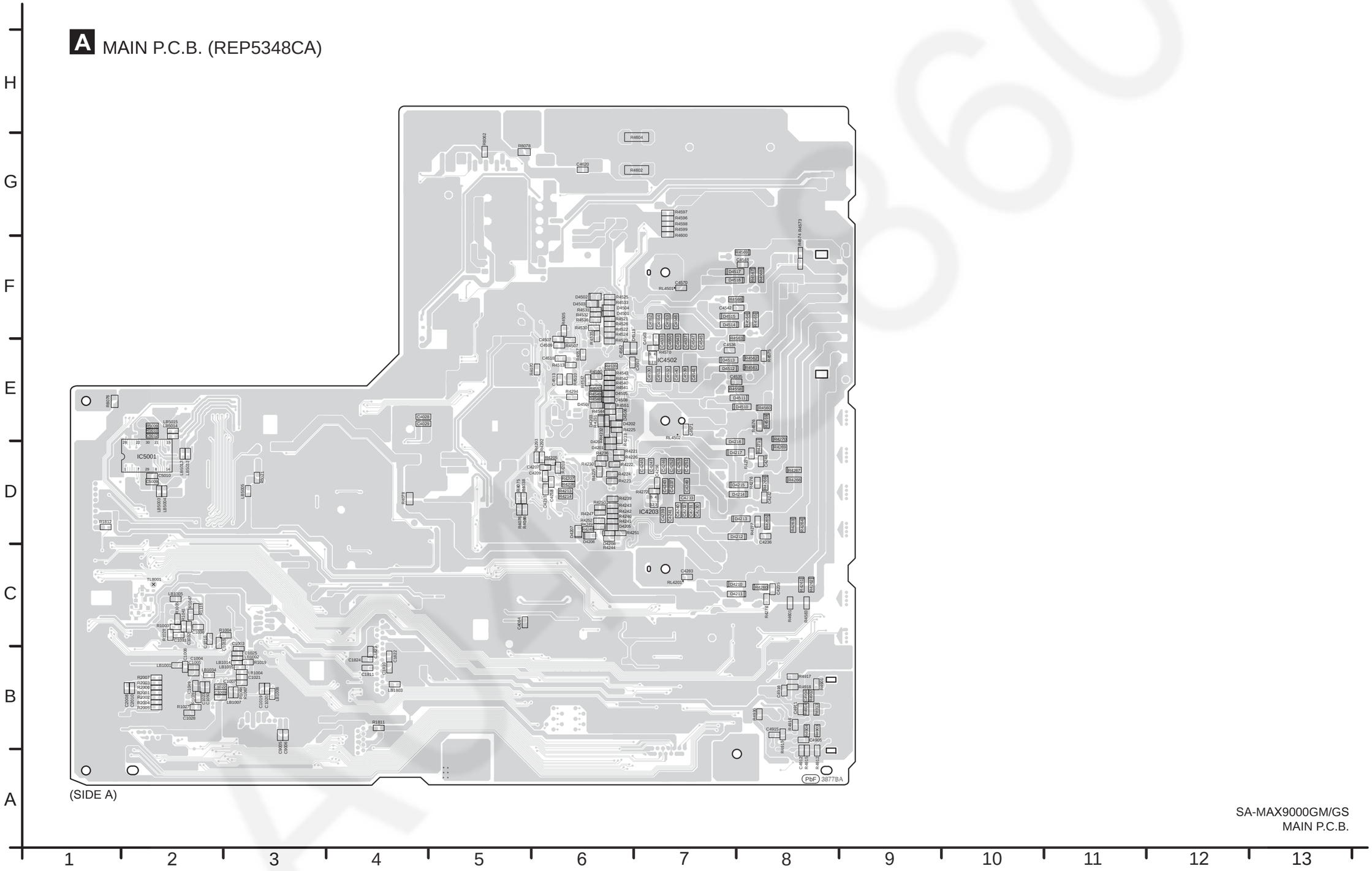

SA-MAX9000GM/GS
MAIN P.C.B.

6.2. Main P.C.B. (Side B)

A MAIN P.C.B. (REP5348CA)

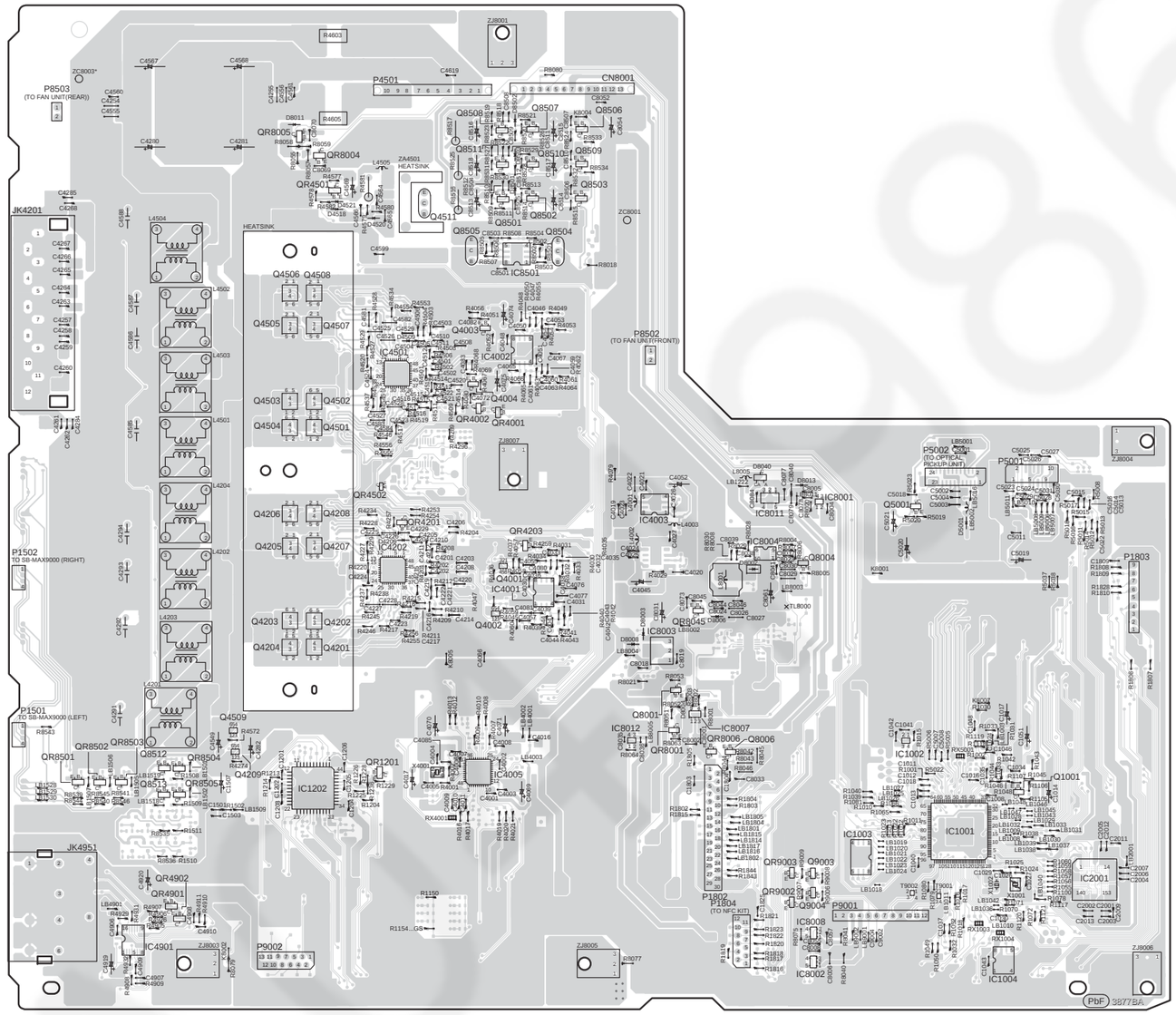

(SIDE B)

NOTE: " * " REF IS FOR INDICATION ONLY

SA-MAX9000GM/GS
MAIN P.C.B.

6.3. Tuner, Mic and USB P.C.B.

B TUNER P.C.B. (REP5348CB)

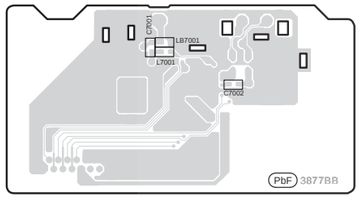

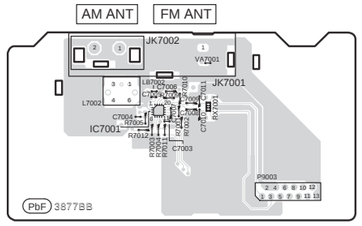

E USB P.C.B. (REP5316BC)

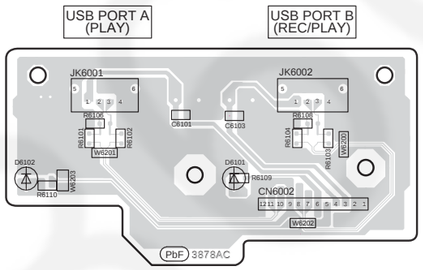

D MIC P.C.B. (REP5316BB)

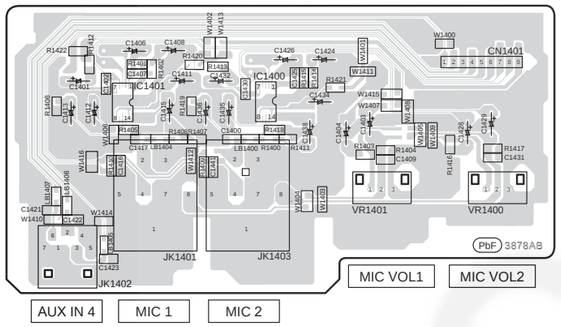

NOTE: " * " REF IS FOR INDICATION ONLY

SA-MAX9000GM/GS
TUNER / MIC / USB P.C.B.

6.4. Panel P.C.B.

C PANEL P.C.B. (REP5316BA)

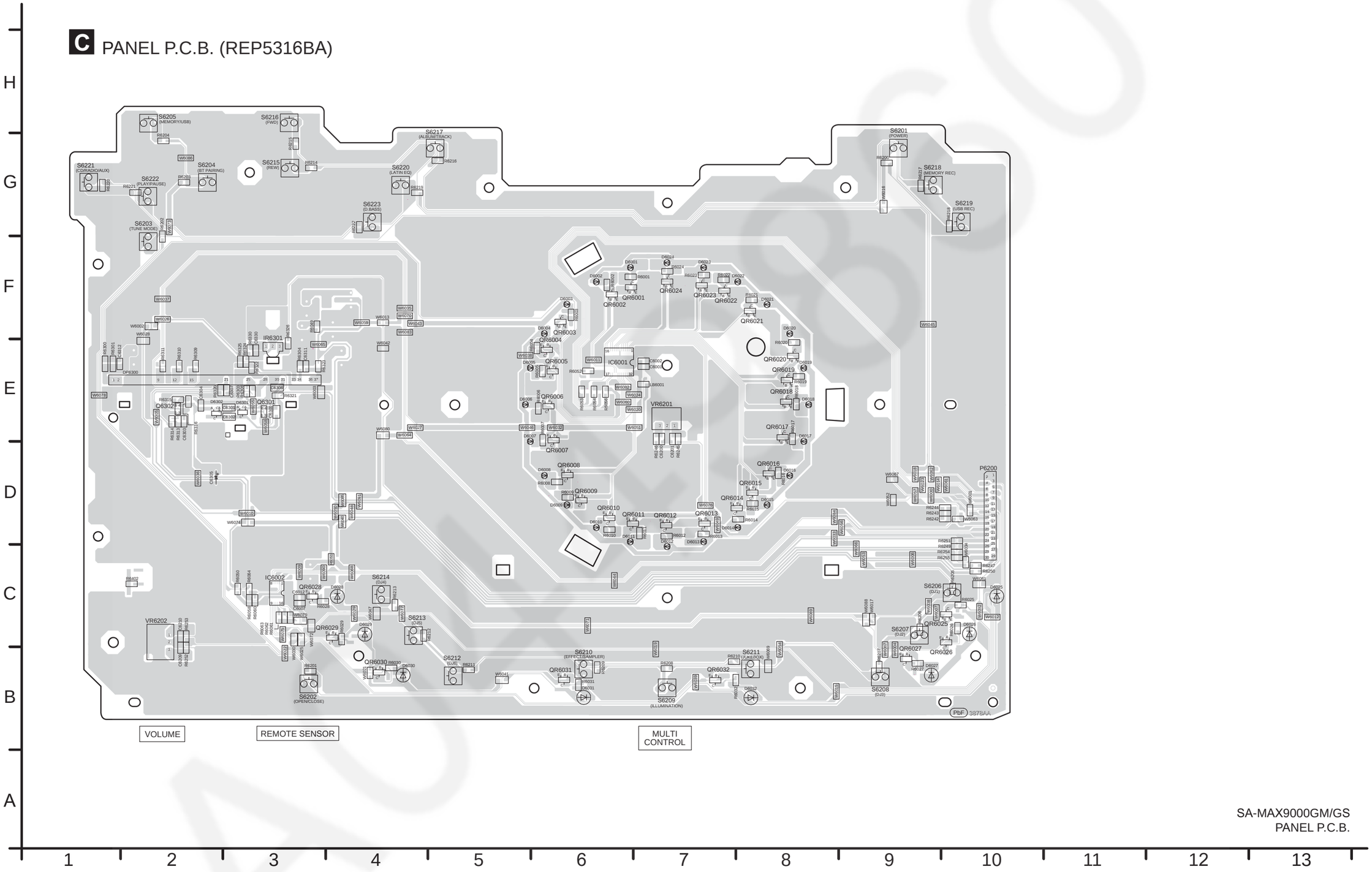

SA-MAX9000GM/GS
PANEL P.C.B.

6.5. SMPS P.C.B.

G SMPS P.C.B. (REP5317D)

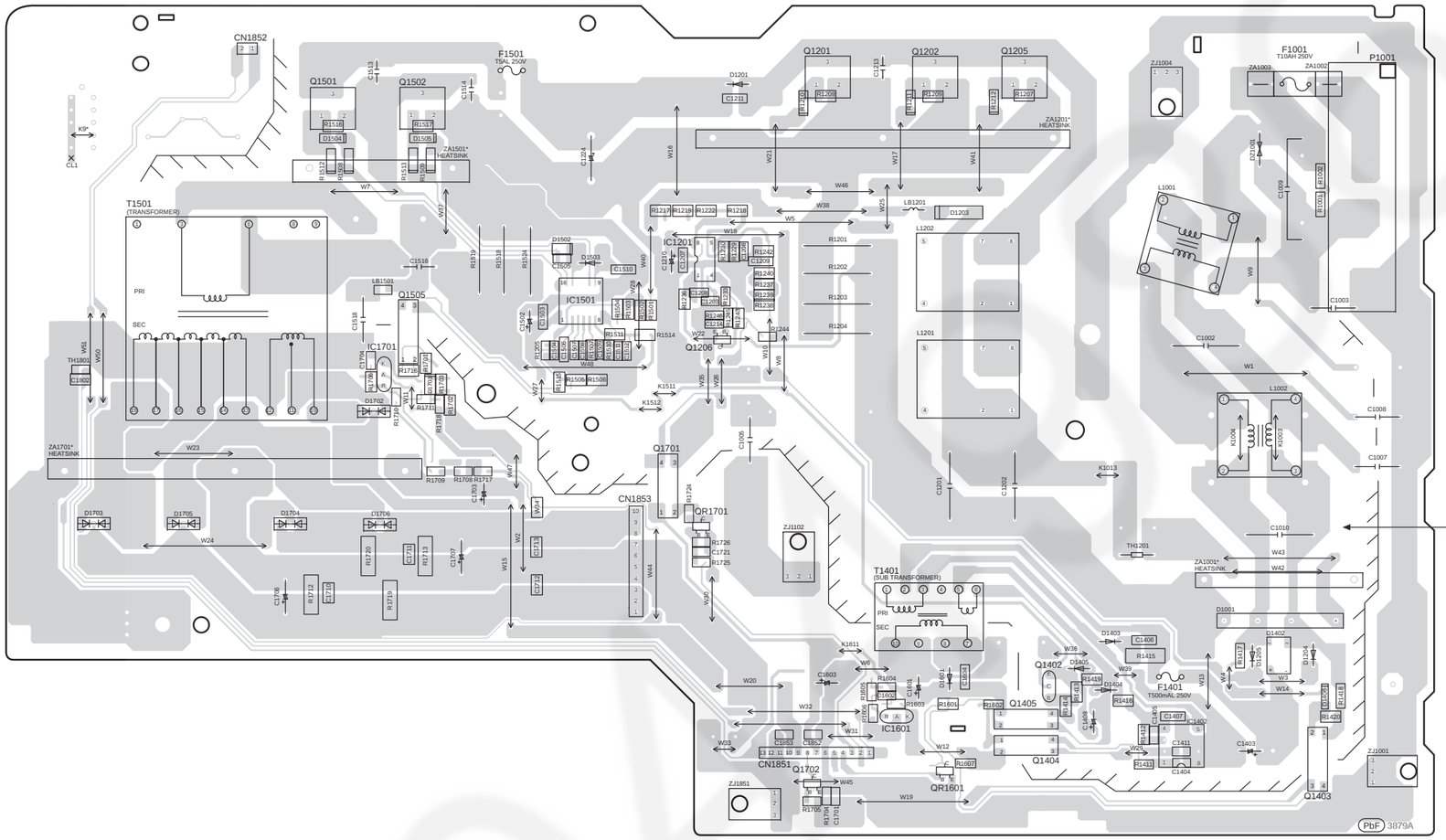

AC IN ~
220V-240V 50/60Hz

CAUTION
RISK OF ELECTRIC SHOCK
AC VOLTAGE LINE.
PLEASE DO NOT TOUCH THIS P.C.B

NOTE: " * " REF IS FOR INDICATION ONLY

SA-MAX9000GM/GS
SMPS P.C.B.

7 Exploded View and Replacement Parts List

7.1. Cabinet Parts Location 1

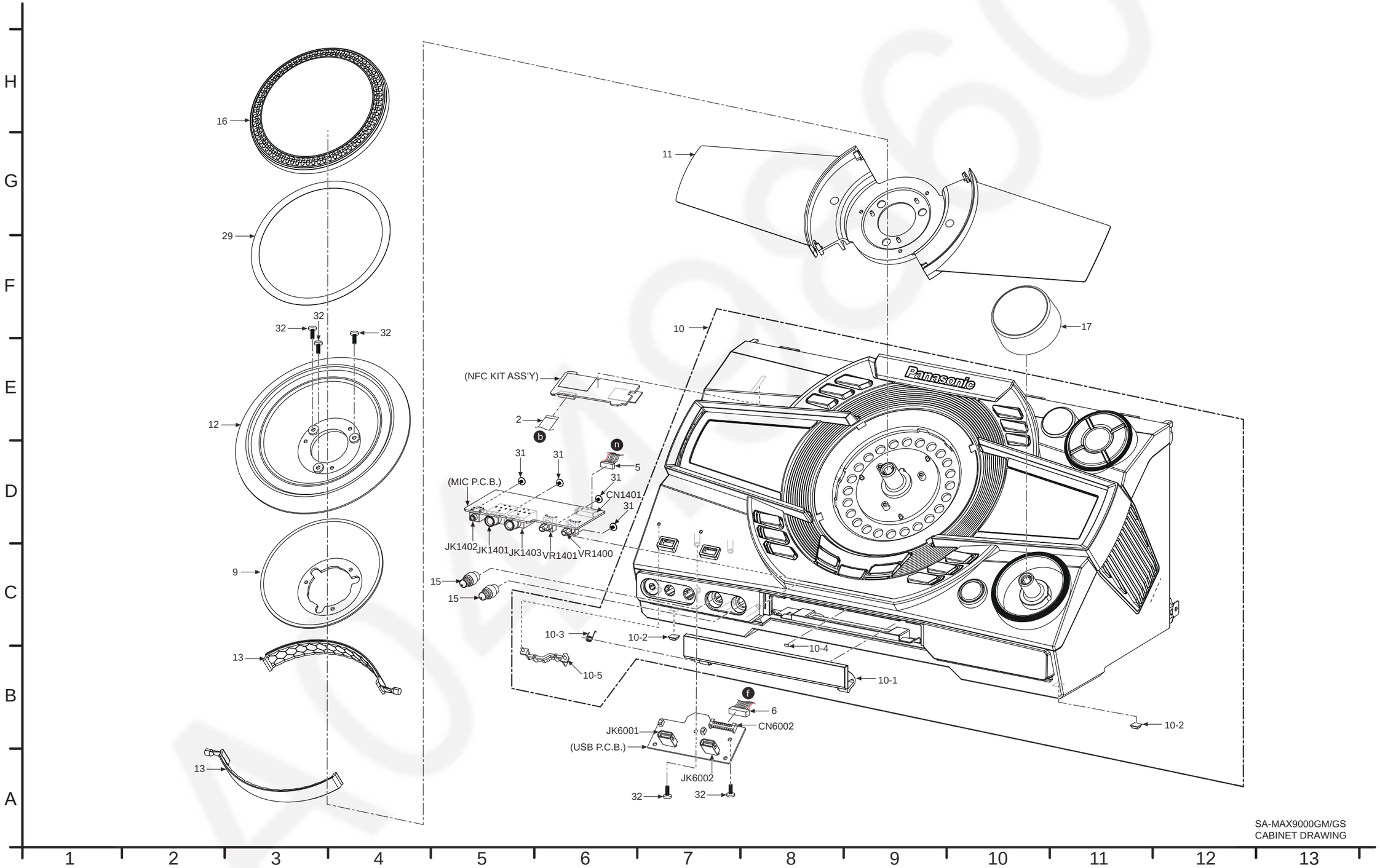

7.2. Cabinet Parts Location 2

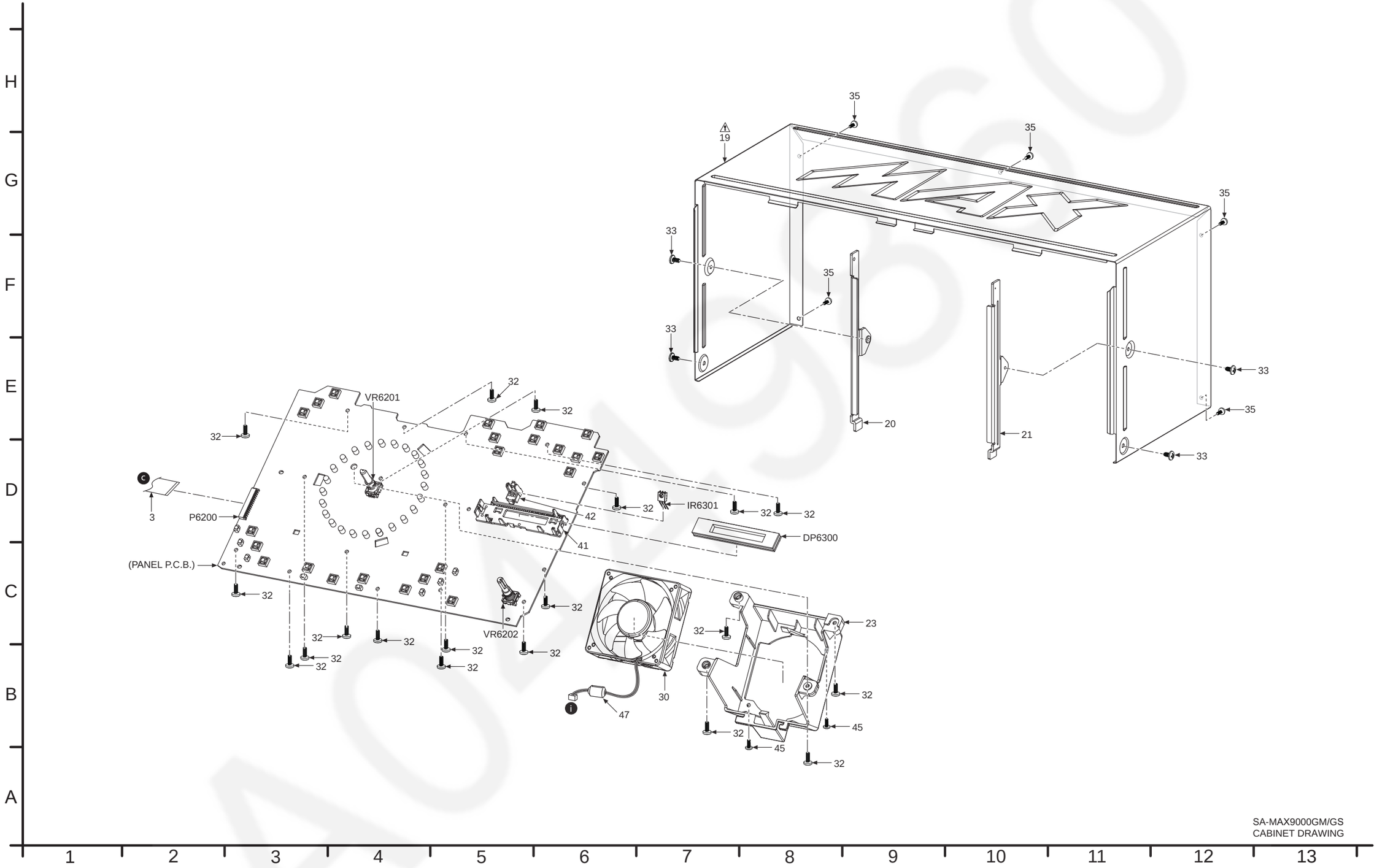

7.3. Cabinet Parts Location 3

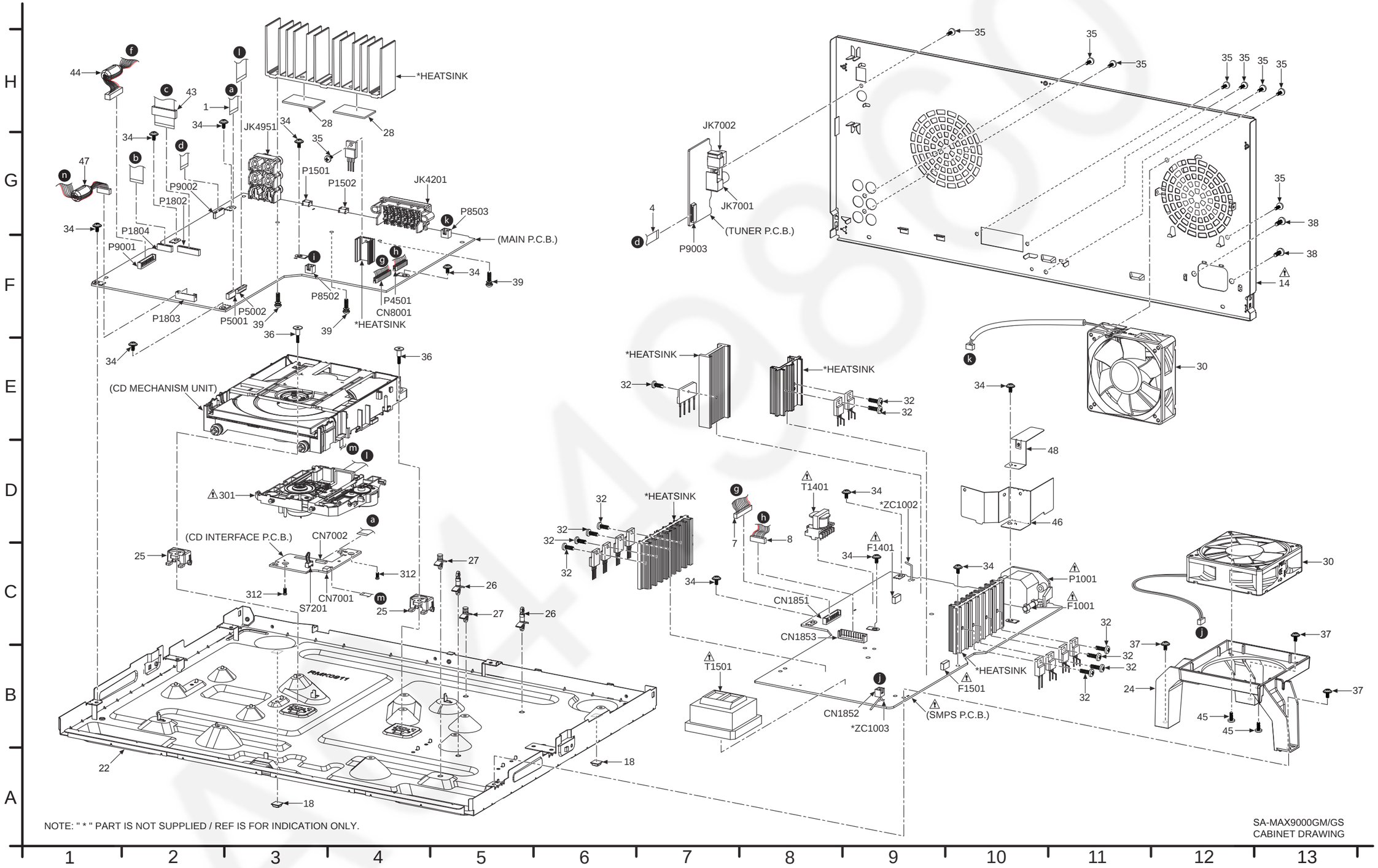

7.4. Packaging

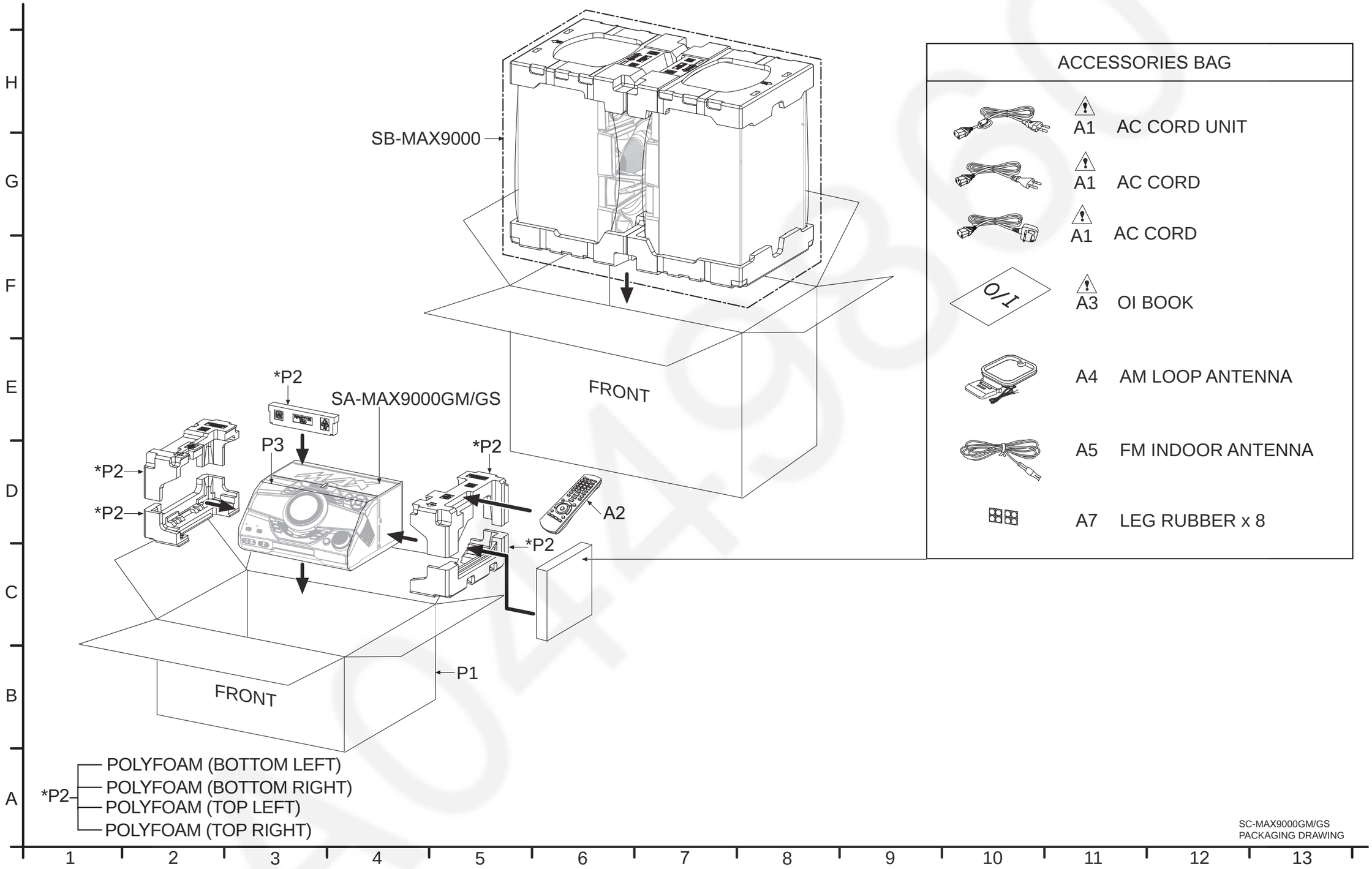

7.5. Mechanical Replacement Part List

Important Safety Notice

Components identified by ⚠ mark have special characteristics important for safety.
When replacing any of these components, use only manufacturer's specified parts.

RTL (Retention Time Limited)

Note: The marking (RTL) indicates that the Retention Time is Limited for this item.
After the discontinuation of this assembly in production, the item will continue to be available for a specific period of time. The retention period of availability is dependant on the type of assembly, and in accordance with the laws governing part and product retention. After the end of this period, the assembly will no longer be available.

Note:

- When replacing any of these components, be sure to use only manufacturer's specified parts shown in the replacement part list.
- The parenthesized indications on the Remarks column specify the destination & product color (Refer to the cover page for the information).
- Parts without these indications shall be used for all areas.
- This product uses a laser diode. Refer to "Precaution of Laser Diode".
- All parts mentioned are supplied by PMX unless indicated likewise.
- Reference for O/I book languages are as follows:

Ar:	Arabic	Du:	Dutch	It:	Italian	Sp:	Spanish
Cf:	Canadian French	En:	English	Ko:	Korean	Sw:	Swedish
Cz:	Czech	Fr:	French	Po:	Polish	Co:	Traditional Chinese
Da:	Danish	Ge:	German	Ru:	Russian	Cn:	Simplified Chinese
Pe:	Persian	Ur:	Ukraine	Pr:	Portuguese	Fi:	Finnish

Safety	Ref. No.	Part No.	Part Name & Description	Qty	Remarks
			CABINET AND CHASSIS		
	1	REE1730	10P FFC (MAIN-CD INTERFACE)	1	
	2	REE2141	12P FFC (NFC-MAIN)	1	
	3	REE2142	30P FFC (PANEL-MAIN)	1	
	4	REE2143	13P FFC (TUNER-MAIN)	1	
	5	REX1904	9P WIRE (MIC-MAIN)	1	
	6	REX1905	12P WIRE (USB-MAIN)	1	
	7	REX1906	13P WIRE (SMPS-MAIN)	1	
	8	REX1907	10P WIRE (SMPS-MAIN)	1	
	9	RGC0056-S	LIGHT REFLECTOR	1	
	10	RFKGX9000GSK	FRONT PANEL ASS'Y	1	
	10-1	RGK2635-K	CD LID	1	
	10-2	RKAX0042-K	LEG CUSHION	2	
	10-3	RMB0982	CD LID SPRING	1	
	10-4	RMGX0033A-K	CD LID CUSHION	1	
	10-5	RGL0830-Q	USB LIGHT PIECE	1	
	11	RGL0826-Q	LIGHT WING	1	
	12	RGL0827-Q	LIGHT ORNAMENT	1	

Safety	Ref. No.	Part No.	Part Name & Description	Qty	Remarks
	13	RGL0840-Q	PATTERN LIGHT PIECE	2	
⚠	14	RGR0484B-A	REAR PANEL	1	
	15	RGW0450-K	MIC VOLUME KNOB	2	
	16	RGW0448A-K	DJ TABLE	1	
	17	RGW0457-1S	VOLUME KNOB	1	
	18	RKAX0042-K	LEG CUSHION	2	
⚠	19	RKM0771-K	TOP CABINET	1	
	20	RMA2506-1	SIDE ANGLE L	1	
	21	RMA2507-1	SIDE ANGLE R	1	
	22	RXK0902	BOTTOM CHASSIS UNIT	1	
	23	RMN1131	FAN HOLDER	1	
	24	RMN1142	FAN HOLDER	1	
	25	RMQX0382-3	CD MECHA SUPPORT	2	
	26	RMX0510	SMPS PCB SPACER	2	
	27	RMX0552	PCB SPACER	2	
	28	RMG0982-H	RADIATION RUBBER	2	
	29	RMQ2552	DJ SLIDER SHEET	1	
	30	L6FAYYYH0354	FAN MOTOR	3	
	31	RHD26016-1L	SCREW	4	
	32	RHD26046-L	SCREW	35	
	33	RHD30007-K2J	SCREW	4	
	34	RHD30111-31	SCREW	11	
	35	RHD30119-S	SCREW	14	
	36	RHDX031008	SCREW	2	
	37	RHDX30005-J	SCREW	3	
	38	XTB4+10AFJ	SCREW	2	
	39	RHD26078	SCREW	3	
	41	RMN1049-1	FL HOLDER	1	
	42	RMN1085-1	IR HOLDER	1	

Safety	Ref. No.	Part No.	Part Name & Description	Qty	Remarks
	43	J0KD00000172	FERRITE CORE	1	
	44	J0KG00000199	FERRITE CORE	1	
	45	XTB3+12JFJK	SCREW	4	
	46	RXA0277	SMPS SHIELD PLATE UNIT	1	
	47	J0KG00000011	FERRITE CORE	2	
	48	RSC1341	SHIELD PLATE B	1	
			TRAVERSE DECK		
⚠	301	RAE1052Z-V	TRAVERSE ASS'Y	1	(E.S.D)
	312	XTN2+6GFJ	SCREW	2	
			PACKING MATERI-ALS		
	P1	RPG0S59	PACKING CASE	1	GS
	P1	RFKZAX9000GM	PACKING CASE	1	GM
	P2	RPN2771-1	POLYFOAM	1	
	P3	RPH0333	MIRAMAT SHEET	1	
			ACCESSORIES		
⚠	A1	RFA3678	AC CORD UNIT	1	
⚠	A1	K2CP2YY00071	AC CORD	1	
⚠	A1	K2CT2YY00103	AC CORD	1	
	A2	N2QAYB001022	REMOTE CONTROL	1	
⚠	A3	RQT0A66-G	O/I BOOK (En,Cn)	1	
	A4	N1DYYYY00011	AM LOOP ANTENNA	1	
	A5	RSAX0002	FM INDOOR ANTENNA	1	
	A7	RKAX0038B	LEG RUBBER	8	

A0449860

7.6. Electrical Replacement Part List

Important Safety Notice

Components identified by ⚠ mark have special characteristics important for safety.
When replacing any of these components, use only manufacturer's specified parts.

RTL (Retention Time Limited)

Note: The marking (RTL) indicates that the Retention Time is Limited for this item.
After the discontinuation of this assembly in production, the item will continue to be available for a specific period of time. The retention period of availability is dependant on the type of assembly, and in accordance with the laws governing part and product retention. After the end of this period, the assembly will no longer be available.

Note:

- When replacing any of these components, be sure to use only manufacturer's specified parts shown in the replacement part list.
- The parenthesized indications on the Remarks column specify the destination & product color (Refer to the cover page for the information).
- Parts without these indications shall be used for all areas.
- This product uses a laser diode. Refer to "Precaution of Laser Diode".
- Capacitor value are in microfarads (uF) unless specified otherwise, P=Pico-farads (pF), F=Farads.
- Resistance values are in ohms, unless specified otherwise, 1K=1000 (OHM).
- All parts mentioned are supplied by Panasonic Mexico.
- Parts mentioned [SPG] in the Remarks column are supplied by JAPAN.

E.S.D. standards for Electrostatically Sensitive Devices, refer to "PREVENTION OF ELECTROSTATIC DISCHARGE (ESD) TO ELECTROSTATIC SENSITIVE (ES) DEVICES" section.

Safety	Ref. No.	Parts No.		Parts name & Description	Qty	Remarks
		SA-MAX9000GN	SA-MAX9000GM/GS			
	PCB1	RFKV5315DA	RFKV5348CA	MAIN/NFC KIT ASS'Y	1	
	PCB2	REP5315DB	REP5348CB	TUNER P.C.B	1	(RTL)
	PCB3	RFKV5315DC	RFKV5348CC	NFC KIT ASS'Y	1	
	PCB4	REP5316AA	REP5316BA	PANEL P.C.B	1	(RTL)
	PCB5	REP5316AB	REP5316BB	MIC P.C.B	1	(RTL)
	PCB6	REP5316AC	REP5316BC	USB P.C.B	1	(RTL)
⚠	PCB7	REP5317B	REP5317D	SMPS P.C.B	1	(RTL)
	IC1003	RFKWFX9000LM	RFKWFX9000GM	IC	1	(E.S.D)
	D1402	B0EDHS000002	B0EDKT000007	DIODE	1	(E.S.D)
	LB9001	J0JGC0000070	D0GBR00J0004	0 1/10W	1	
	LB9002	J0JGC0000070	D0GBR00J0004	0 1/10W	1	
	R1033	D0GB272JA065	D0GB562JA065	5.6K 1/10W	1	
	C1213	F1B3D681A132	F1B3D221A132	220pF 2000V	1	
	D6401	B0EAMM000057	-	DIODE	1	(E.S.D)
	ZA1003	K3GE1ZZ00001	-	FUSE HOLDER	1	
	JK4952	K2HA2YYA0006	-	JK AUX IN1	1	
	R1155	D0GBR00J0004	-	0 1/10W	1	GN
	R1423	D0GBR00J0004	-	0 1/10W	1	
	R1424	D0GBR00J0004	-	0 1/10W	1	
	R1425	D0GBR00J0004	-	0 1/10W	1	
	R1426	D0GBR00J0004	-	0 1/10W	1	
	R6401	D0GBR00J0004	-	0 1/10W	1	
	IC1400	-	C1AB00003130	IC	1	(E.S.D)
	D1404	-	B0EAMM000057	DIODE	1	(E.S.D)
	VR1401	-	EVUE27FK2B53	MIC JOG	1	
	LB1400	-	J0JBC0000019	INDUCTOR	1	
	JK1401	-	K2HB107B0001	JK	1	
	JK4951	-	K2HA208B0006	JK	1	
	W34	-	D0GDR00J0004	0 1/8W	1	
	R1154	-	D0GBR00J0004	0 1/10W	1	

Safety	Ref. No.	Parts No.		Parts name & Description	Qty	Remarks
		SA-MAX9000GN	SA-MAX9000GM/GS			
	R1225	-	D0GBR00J0004	0 1/10W	1	
	R1410	-	D0GBR00J0004	0 1/10W	1	
	R6402	-	D0GBR00J0004	0 1/10W	1	
	W6203	-	D0GDR00J0004	0 1/8W	1	
	R1416	-	D0GB101JA065	100 1/10W	1	
	R1419	-	D0GB104JA065	100K 1/10W	1	
	R4912	-	D0GB123JA065	12K 1/10W	1	
	R4913	-	D0GB123JA065	12K 1/10W	1	
	R4916	-	D0GB123JA065	12K 1/10W	1	
	R4917	-	D0GB123JA065	12K 1/10W	1	
	R1421	-	D0GB221JA065	220 1/10W	1	
	R1417	-	D0GB472JA065	4.7K 1/10W	1	
	R1415	-	D0GB473JA065	47K 1/10W	1	
	R1418	-	D0GB473JA065	47K 1/10W	1	
	R1411	-	D0GB561JA065	560 1/10W	1	
	R1414	-	D0GB561JA065	560 1/10W	1	
	R1400	-	D0GB681JA065	680 1/10W	1	
	R1413	-	D0GB681JA065	680 1/10W	1	
	R4914	-	D0GB822JA065	8.2K 1/10W	1	
	R4915	-	D0GB822JA065	8.2K 1/10W	1	
	R4918	-	D0GB822JA065	8.2K 1/10W	1	
	R4919	-	D0GB822JA065	8.2K 1/10W	1	
⚠	C1003	-	F1BAF1020030	1000pF	1	SMPS
⚠	C1004	-	F1BAF1020030	1000pF	1	SMPS
	C1007	-	F1H1H104B047	0.1uF 50V	1	MAIN
	C1008	-	F1H1H104B047	0.1uF 50V	1	MAIN
	C1400	-	F1H1H102B047	1000pF 50V	1	
	C1416	-	F1H1H103B047	0.01uF 50V	1	
	C1424	-	F2A1H1R0A213	1.0uF 50V	1	
	C1425	-	F1H1H103B047	0.01uF 50V	1	
	C1426	-	F2A1H1R0A213	1.0uF 50V	1	
	C1428	-	F2A1H4R7A218	4.7uF 50V	1	
	C1429	-	F2A1HR10A015	0.10uF 50V	1	
	C1430	-	F1H1H470B052	47pF 50V	1	
	C1431	-	F1H1H472B047	4700pF 50V	1	
	C1432	-	F2A1H4R7A213	4.7uF 50V	1	
	C1434	-	F2A1C100A207	10uF 16V	1	
	C1435	-	F2A1C1000096	10uF 16V	1	
	C1436	-	F2A1H1R0A213	1.0uF 50V	1	
	C1438	-	F2A1HR10A015	0.10uF 50V	1	
	C4911	-	F1H1H105B027	1uF 50V	1	
	C4912	-	F1H1H105B027	1uF 50V	1	
	C4915	-	F1H1A1050039	1uF 10V	1	
	C4916	-	F1H1A1050039	1uF 10V	1	

MMH1604