PSG1303039CE

Service Manual

CD Stereo System

Model No. SA-MAX700GS

Product Color: (K)...Black Type

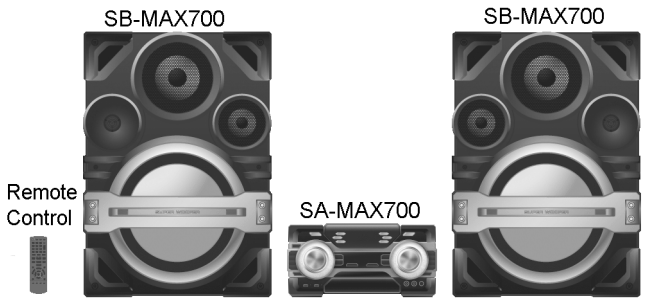

Please refer to the original service manual for:
- **CD Mechanism Unit, Order No. PSG1201019AE**
- **Speaker system SB-MAX700GSK, Order No. PSG1301011CE**

⚠ WARNING

This service information is designed for experienced repair technicians only and is not designed for use by the general public.
It does not contain warnings or cautions to advise non-technical individuals of potential dangers in attempting to service a product.
Products powered by electricity should be serviced or repaired only by experienced professional technicians. Any attempt to service or repair the product or products dealt with in this service information by anyone else could result in serious injury or death.

IMPORTANT SAFETY NOTICE

There are special components used in this equipment which are important for safety. These parts are marked by ⚠ in the Schematic Diagrams, Circuit Board Diagrams, Exploded Views and Replacement Parts List. It is essential that these critical parts should be replaced with manufacturer's specified parts to prevent shock, fire or other hazards. Do not modify the original design without permission of manufacturer.

TABLE OF CONTENTS

PAGE

1 Safety Precautions ---------- **3**
- 1.1. General Guidelines ---------- 3
- 1.2. Before Use ---------- 4
- 1.3. Before Repair and Adjustment ---------- 4
- 1.4. Protection Circuitry ---------- 4
- 1.5. Caution For AC Cord ---------- 5
- 1.6. Caution For Fuse Replacement ---------- 6
- 1.7. Safety Parts Information ---------- 6

2 Warning ---------- **7**
- 2.1. Prevention of Electrostatic Discharge (ESD) to Electrostatically Sensitive (ES) Devices ---------- 7
- 2.2. Precaution of Laser Diode ---------- 8
- 2.3. Service caution based on Legal restrictions ---------- 9
- 2.4. Handling Precautions for Traverse Unit ---------- 10
- 2.5. Grounding for electrostatic breakdown prevention ---------- 11

3 Service Navigation ---------- **12**
- 3.1. Service Information ---------- 12
- 3.2. Firmware Update Procedure ---------- 13

4 Specifications ---------- **14**

5 General/Introduction ---------- **15**
- 5.1. Media Information ---------- 15

6 Location of Controls and Components ---------- **16**
- 6.1. Remote Control Key Button Operation ---------- 16
- 6.2. Main Unit Key Button Operation ---------- 17

7 Installation Instructions ---------- **18**
- 7.1. Speaker and A/C Connection ---------- 18

8 Service Mode ---------- **19**
- 8.1. Cold-Start ---------- 19

Panasonic®

© Panasonic Corporation 2013. All rights reserved. Unauthorized copying and distribution is a violation of law.

8.2. Doctor Mode Table ---------- 20
8.3. Reliability Test Mode (CD Mechanism Unit) ------- 23
8.4. Self-Diagnostic Mode ---------- 24
8.5. Self-Diagnostic Error Code Table ---------- 24
8.6. Sales Demonstration Lock Function ---------- 25
9 Troubleshooting Guide ---------- 26
10 Disassembly and Assembly Instructions ---------- 27
10.1. Screw Types ---------- 27
10.2. Disassembly Flow Chart ---------- 28
10.3. Main Components and P.C.B. Locations ---------- 29
10.4. Disassembly of Top Cabinet ---------- 30
10.5. Disassembly of Front Panel Unit ---------- 31
10.6. Disassembly of FL Display P.C.B. ---------- 31
10.7. Disassembly of Illumination Button P.C.B. --------- 32
10.8. Disassembly of Control P.C.B. ---------- 32
10.9. Disassembly of Control Jog LED P.C.B. ---------- 34
10.10. Disassembly of Volume P.C.B. ---------- 34
10.11. Disassembly of Volume Jog LED P.C.B. ---------- 36
10.12. Disassembly of Remote Sensor P.C.B. ---------- 36
10.13. Disassembly of USB P.C.B. ---------- 36
10.14. Disassembly of Mic P.C.B. ---------- 37
10.15. Disassembly of LED P.C.B. ---------- 37
10.16. Disassembly of CD Lid ---------- 38
10.17. Disassembly of Rear Panel ---------- 39
10.18. Disassembly of CD Mechanism Unit ---------- 40
10.19. Disassembly of Main P.C.B. ---------- 40
10.20. Disassembly of Digital Amplifier IC (IC2501/ IC2502/IC2503/IC2504) ---------- 41
10.21. Disassembly of SMPS P.C.B. and Voltage Selector P.C.B. ---------- 42
10.22. Replacement of Switching Regulator (Q5700) --- 44
10.23. Replacement of Rectifier Diode (D5801) ---------- 46
10.24. Replacement of Rectifier Diode (D5802) ---------- 47
10.25. Disassembly of CD Interface P.C.B. ---------- 49
11 Service Position ---------- 50
11.1. Checking of FL Display P.C.B., Control P.C.B., Volume P.C.B., Mic P.C.B. and USB P.C.B. ------- 50
11.2. Checking of Main P.C.B. (Side B) ---------- 51
11.3. Checking of Main P.C.B. (Side A) ---------- 52
11.4. Checking of SMPS P.C.B. ---------- 53
12 Block Diagram ---------- 55
12.1. Servo & System Control ---------- 55
12.2. IC Terminal Chart ---------- 58
12.3. Audio ---------- 59
12.4. Power Supply ---------- 61
13 Wiring Connection Diagram ---------- 63
14 Schematic Diagram ---------- 65
14.1. Schematic Diagram Notes ---------- 65
14.2. Main (CD Servo/Micon/Damp) Circuit ---------- 67
14.3. FL Display Circuit ---------- 81
14.4. Volume Circuit ---------- 83
14.5. Control & USB Circuit ---------- 84
14.6. Mic Circuit ---------- 85
14.7. Remote Sensor, LED & Illumination Button Circuit ---------- 86
14.8. SMPS Circuit ---------- 87
14.9. Voltage Selector, Control Jog LED, Volume Jog LED & CD Interface Circuit ---------- 89
15 Printed Circuit Board ---------- 90
15.1. Main P.C.B. ---------- 90
15.2. FL Display & Volume P.C.B. ---------- 92
15.3. Control, Mic, USB, Remote Sensor, LED & Illumination Button P.C.B. ---------- 93
15.4. SMPS & Voltage Selector P.C.B. ---------- 94
15.5. Control Jog LED, Volume Jog LED & CD Interface P.C.B. ---------- 95
16 Appendix Information of Schematic Diagram -------- 97
16.1. Voltage & Waveform Chart ---------- 97
17 Exploded View and Replacement Parts List ---------- 107
17.1. Exploded View and Mechanical replacement Part List ---------- 107
17.2. Electrical Replacement Part List ---------- 113

1 Safety Precautions

1.1. General Guidelines

1. **IMPORTANT SAFETY NOTICE**

   There are special components used in this equipment which are important for safety. These parts are marked by ⚠ in the Schematic Diagrams, Circuit Board Layout, Exploded Views and Replacement Parts List. It is essential that these critical parts should be replaced with manufacturer's specified parts to prevent X-RADIATION, shock, fire, or other hazards. Do not modify the original design without permission of manufacturer.

2. An Isolation Transformer should always be used during the servicing of AC Adaptor whose chassis is not isolated from the AC power line. Use a transformer of adequate power rating as this protects the technician from accidents resulting in personal injury from electrical shocks. It will also protect AC Adaptor from being damaged by accidental shorting that may occur during servicing.
3. When servicing, observe the original lead dress. If a short circuit is found, replace all parts which have been overheated or damaged by the short circuit.
4. After servicing, see to it that all the protective devices such as insulation barriers, insulation papers shields are properly installed.
5. After servicing, make the following leakage current checks to prevent the customer from being exposed to shock hazards.

1.1.1. Leakage Current Cold Check

1. Unplug the AC cord and connect a jumper between the two prongs on the plug.
2. Measure the resistance value, with an ohmmeter, between the jumpered AC plug and each exposed metallic cabinet part on the equipment such as screwheads, connectors, control shafts, etc. When the exposed metallic part has a return path to the chassis, the reading should be between 1MΩ and 5.2MΩ.

   When the exposed metal does not have a return path to the chassis, the reading must be ∞

1.1.2. Leakage Current Hot Check

1. Plug the AC cord directly into the AC outlet. Do not use an isolation transformer for this check.
2. Connect a 1.5kΩ, 10 watts resistor, in parallel with a 0.15μF capacitors, between each exposed metallic part on the set and a good earth ground such as a water pipe, as shown in Figure 1-1.
3. Use an AC voltmeter, with 1000 ohms/volt or more sensitivity, to measure the potential across the resistor.
4. Check each exposed metallic part, and measure the voltage at each point.
5. Reverse the AC plug in the AC outlet and repeat each of the above measurements.
6. The potential at any point should not exceed 0.75 volts RMS. A leakage current tester (Simpson Model 229 or equivalent) may be used to make the hot checks, leakage current must not exceed 1/2 milliamp. In case a measurement is outside of the limits specified, there is a possibility of a shock hazard, and the equipment should be repaired and rechecked before it is returned to the customer.

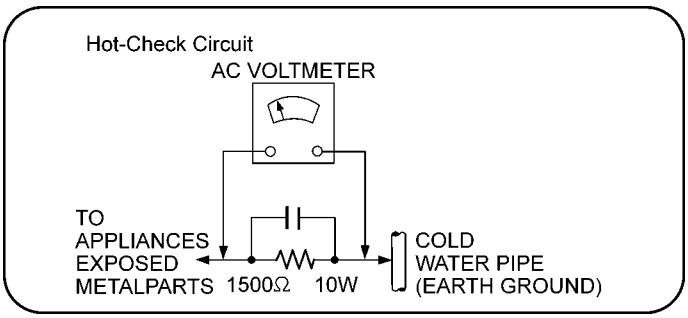

Figure 1-1

1.2. Before Use

Be sure to disconnect the mains cord before adjusting the voltage selector as shown in Figure 1-2.
Use a minus(-) screwdriver to set the voltage selector (on the rear panel) to the voltage setting for the area in which the unit will be used.
Note that this unit will be seriously damaged if this setting is not made correctly. (There is no voltage selector for some countries, the correct voltage is already set.)

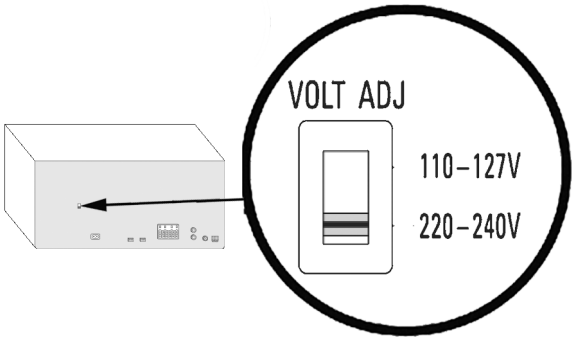

Figure 1-2

1.3. Before Repair and Adjustment

Disconnect AC power to discharge the AC Capacitors (C5701, C5702, C5703, C5704, C5705, C5707, C5708) through a 10 Ω, 10 W resistor to ground.

Caution:

DO NOT SHORT-CIRCUIT DIRECTLY (with a screwdriver blade, for instance), as this may destroy solid state devices.

After repairs are completed, restore power gradually using a variac, to avoid overcurrent.
Current consumption at AC 110~127 V/220~240 V, 50/60 Hz in FM Tuner at volume minimum should be ~ 850mA.

1.4. Protection Circuitry

The protection circuitry may have operated if either of the following conditions are noticed:

- No sound is heard when the power is turned on.
- Sound stops during a performance.

The function of this circuitry is to prevent circuitry damage if, for example, the positive and negative speaker connection wires are “shorted”, or if speaker systems with an impedance less than the indicated rated impedance of the amplifier are used.
If this occurs, follow the procedure outlines below:

1. Turn off the power.
2. Determine the cause of the problem and correct it.
3. Turn on the power once again after one minute.

Note:

When the protection circuitry functions, the unit will not operate unless the power is first turned off and then on again.

1.5. Caution For AC Cord

For your safety, please read the following text carefully.

This appliance is supplied with a moulded three pin mains plug for your safety and convenience.
A 5-ampere fuse is fitted in this plug.
Should the fuse need to be replaced please ensure that the replacement fuse has a rating of 5-ampere and that it is approved by ASTA or BSI to BS1362.
Check for the ASTA mark ⊛ or the BSI mark ⊛ on the body of the fuse.

If the plug contains a removable fuse cover you must ensure that it is refitted when the fuse is replaced.
If you lose the fuse cover the plug must not be used until a replacement cover is obtained.
A replacement fuse cover can be purchased from your local dealer.

CAUTION!
IF THE FITTED MOULDED PLUG IS UNSUITABLE FOR THE SOCKET OUTLET IN YOUR HOME THEN THE FUSE SHOULD BE REMOVED AND THE PLUG CUT OFF AND DISPOSED OF SAFELY.
THERE IS A DANGER OF SEVERE ELECTRICAL SHOCK IF THE CUT OFF PLUG IS INSERTED INTO ANY 13-AMPERE SOCKET.

If a new plug is to be fitted please observe the wiring code as stated below.
If in any doubt please consult a qualified electrician.

IMPORTANT
The wires in this mains lead are coloured in accordance with the following code:
Blue: Neutral, Brown: Live.
As these colours may not correspond with the coloured markings identifying the terminals in your plug, proceed as follows:
The wire which is coloured Blue must be connected to the terminal which is marked with the letter N or coloured Black or Blue.
The wire which is coloured Brown must be connected to the terminal which is marked with the letter L or coloured Brown or Red.

WARNING: DO NOT CONNECT EITHER WIRE TO THE EARTH TERMINAL WHICH IS MARKED WITH THE LETTER E, BY THE EARTH SYMBOL ⏚ OR COLOURED GREEN OR GREEN/YELLOW.

THIS PLUG IS NOT WATERPROOF—KEEP DRY.

Before use
Remove the connector cover.

How to replace the fuse
The location of the fuse differ according to the type of AC mains plug (figures A and B). Confirm the AC mains plug fitted and follow the instructions below.
Illustrations may differ from actual AC mains plug.

1. Open the fuse cover with a screwdriver.

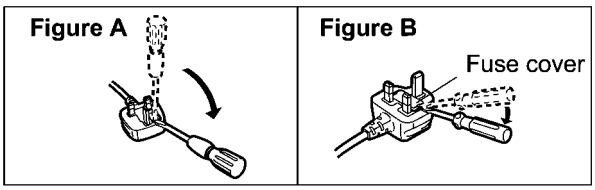

2. Replace the fuse and close or attach the fuse cover.

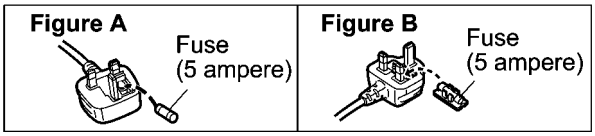

1.6. Caution For Fuse Replacement

CAUTION:

Replace with the same type fuse:
(Manufacturer: LITTELFUSE, Type: 215, F1, T10AH, 250V)

1.7. Safety Parts Information

Safety Parts List:

There are special components used in this equipment which are important for safety.

These parts are marked by ⚠ in the Schematic Diagrams, Exploded View & Replacement Parts List. It is essential that these critical parts should be replaced with manufacturer's specified parts to prevent shock, fire or other hazards. Do not modify the original design without permission of manufacturer.

Safety	Ref No.	Part No.	Part Name & Description	Remarks
⚠	22	RGR0439B-B1	REAR PANEL	
⚠	41	RKM0702-K	TOP CABINET	
⚠	301	RAE1037Z-V	TRAVERSE ASS'Y	
⚠	A2	K2CJ2YY00093	AC CORD	
⚠	A2	K2CP2YY00061	AC CORD	
⚠	A2	K2CQ2YY00119	AC CORD	
⚠	A2	K2CT2YY00097	AC CORD	
⚠	A3	RQT9838-G	O/I BOOK (En/Cn/Ar)	
⚠	PCB10	REP4908H	SMPS P.C.B.	(RTL)
⚠	PCB11	REP4908H	VOLTAGE SELECTOR P.C.B.	(RTL)
⚠	DZ5701	D4EAY511A127	ZNR	(E.S.D)
⚠	S5701	K0ABCA000007	SW VOLTAGE SELECTOR	
⚠	L5701	G0B183J00002	LINE FILTER	
⚠	L5702	G0B183J00002	LINE FILTER	
⚠	T5701	G4DYZ0000070	TRANSFORMER	
⚠	T5751	G4DYZ0000065	TRANSFORMER	
⚠	PC5701	B3PBA0000579	PHOTO COUPLER	
⚠	PC5702	B3PBA0000579	PHOTO COUPLER	
⚠	PC5720	B3PBA0000579	PHOTO COUPLER	
⚠	PC5799	B3PBA0000579	PHOTO COUPLER	
⚠	F1	K5D103BNA005	FUSE	
⚠	P5701	K2AA2B000011	AC INLET	
⚠	R5708	D0GF155JA048	1.5M 1/4W	
⚠	R5709	D0GF155JA048	1.5M 1/4W	
⚠	C5701	F0CAF104A105	0.1uF	
⚠	C5702	F0CAF104A105	0.1uF	
⚠	C5703	F0CAF104A105	0.1uF	
⚠	C5704	F1BAF471A013	470pF	
⚠	C5705	F1BAF471A013	470pF	
⚠	C5707	F1BAF471A013	470pF	
⚠	C5708	F1BAF471A013	470pF	

2 Warning

2.1. Prevention of Electrostatic Discharge (ESD) to Electrostatically Sensitive (ES) Devices

Some semiconductor (solid state) devices can be damaged easily by static electricity. Such components commonly are called Electrostatically Sensitive (ES) Devices.

Examples of typical ES devices are IC (integrated circuits) and some field-effect transistors and semiconductor "chip" components.

The following techniques should be used to help reduce the incidence of component damage caused by electrostatic discharge (ESD).

1. Immediately before handling any semiconductor component or semiconductor-equipped assembly, drain off any ESD on your body by touching a known earth ground. Alternatively, obtain and wear a commercially available discharging ESD wrist strap, which should be removed for potential shock reasons prior to applying power to the unit under test.
2. After removing an electrical assembly equipped with ES devices, place the assembly on a conductive surface such as aluminum foil, to prevent electrostatic charge buildup or exposure of the assembly.
3. Use only a grounded-tip soldering iron to solder or unsolder ES devices.
4. Use only an anti-static solder removal device. Some solder removal devices not classified as “anti-static (ESD protected)” can generate electrical charge sufficient to damage ES devices.
5. Do not use freon-propelled chemicals. These can generate electrical charges sufficient to damage ES devices.
6. Do not remove a replacement ES device from its protective package until immediately before you are ready to install it. (Most replacement ES devices are packaged with leads electrically shorted together by conductive foam, aluminum foil or comparable conductive material).
7. Immediately before removing the protective material from the leads of a replacement ES device, touch the protective material to the chassis or circuit assembly into which the device will be installed.
   CAUTION:
   Be sure no power is applied to the chassis or circuit, and observe all other safety precautions.
8. Minimize bodily motions when handling unpackaged replacement ES devices. (Otherwise harmless motion such as the brushing together of your clothes fabric or the lifting of your foot from a carpeted floor can generate static electricity (ESD) sufficient to damage an ES device).

IMPORTANT SAFETY NOTICE

There are special components used in this equipment which are important for safety. These parts are marked by ⚠ in the Schematic Diagrams, Circuit Board Diagrams, Exploded Views and Replacement Parts List. It is essential that these critical parts should be replaced with manufacturer's specified parts to prevent shock, fire or other hazards. Do not modify the original design without permission of manufacturer.

2.2. Precaution of Laser Diode

CAUTION:
THIS PRODUCT UTILIZES A LASER.
USE OF CONTROLS OR ADJUSTMENTS OR PERFORMANCE OF PROCEDURES OTHER THAN THOSE SPECIFIED HEREIN MAY RESULT IN HAZARDOUS RADIATION EXPOSURE.

Caution:

This product utilizes a laser diode with the unit turned “on”, invisible laser radiation is emitted from the pickup lens.
Wavelength: 790 nm (CD)
Maximum output radiation power from pickup: 100 μW/VDE
Laser radiation from the pickup unit is safety level, but be sure the followings:

1. Do not disassemble the pickup unit, since radiation from exposed laser diode is dangerous.
2. Do not adjust the variable resistor on the pickup unit. It was already adjusted.
3. Do not look at the focus lens using optical instruments.
4. Recommend not to look at pickup lens for a long time.

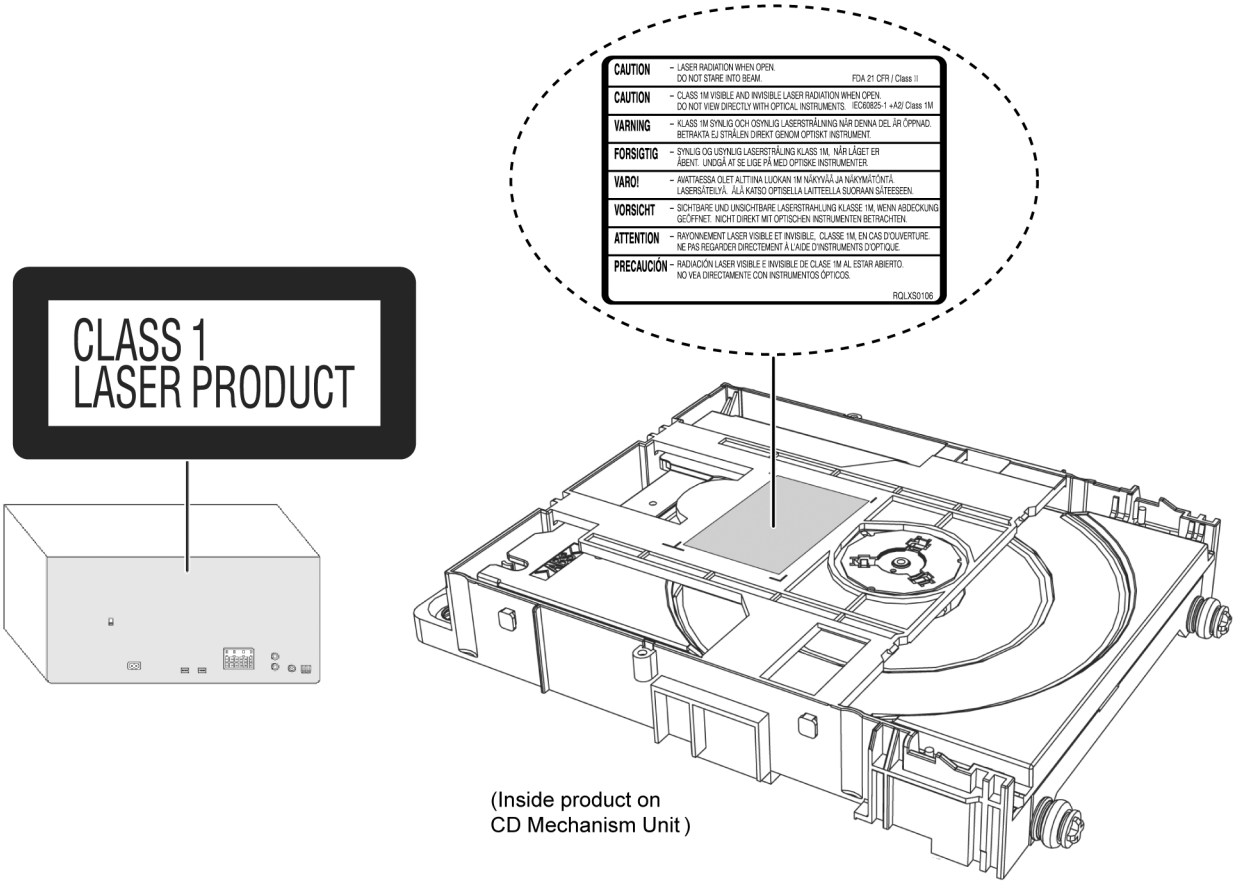

Figure 2-1

2.3. Service caution based on Legal restrictions

2.3.1. General description about Lead Free Solder (PbF)

The lead free solder has been used in the mounting process of all electrical components on the printed circuit boards used for this equipment in considering the globally environmental conservation.

The normal solder is the alloy of tin (Sn) and lead (Pb). On the other hand, the lead free solder is the alloy mainly consists of tin (Sn), silver (Ag) and Copper (Cu), and the melting point of the lead free solder is higher approx.30 degrees C (86°F) more than that of the normal solder.

Definition of PCB Lead Free Solder being used

The letter of “PbF” is printed either foil side or components side on the PCB using the lead free solder. (See right figure)	PbF

Service caution for repair work using Lead Free Solder (PbF)

- The lead free solder has to be used when repairing the equipment for which the lead free solder is used.
  (Definition: The letter of “PbF” is printed on the PCB using the lead free solder.)
- To put lead free solder, it should be well molten and mixed with the original lead free solder.
- Remove the remaining lead free solder on the PCB cleanly for soldering of the new IC.
- Since the melting point of the lead free solder is higher than that of the normal lead solder, it takes the longer time to melt the lead free solder.
- Use the soldering iron (more than 70W) equipped with the temperature control after setting the temperature at 350±30 degrees C (662±86°F).

Recommended Lead Free Solder (Service Parts Route.)

- The following 3 types of lead free solder are available through the service parts route.
  RFKZ03D01K----------(0.3mm 100g Reel)
  RFKZ06D01K----------(0.6mm 100g Reel)
  RFKZ10D01K----------(1.0mm 100g Reel)

Note

* Ingredient: tin (Sn), 96.5%, silver (Ag) 3.0%, Copper (Cu) 0.5%, Cobalt (Co) / Germanium (Ge) 0.1 to 0.3%

2.4. Handling Precautions for Traverse Unit

The laser diode in the optical pickup unit may break down due to static electricity of clothes or human body. Special care must be taken avoid caution to electrostatic breakdown when servicing and handling the laser diode in the traverse unit.

2.4.1. Cautions to Be Taken in Handling the Optical Pickup Unit

The laser diode in the optical pickup unit may be damaged due to electrostatic discharge generating from clothes or human body. Special care must be taken avoid caution to electrostatic discharge damage when servicing the laser diode.

1. Do not give a considerable shock to the optical pickup unit as it has an extremely high-precise structure.
2. To prevent the laser diode from the electrostatic discharge damage, the flexible cable of the optical pickup unit removed should be short-circuited with a short pin or a clip.
3. The flexible cable may be cut off if an excessive force is applied to it. Use caution when handling the flexible cable.
4. The antistatic FPC is connected to the new optical pickup unit. After replacing the optical pickup unit and connecting the flexible cable, cut off the antistatic FPC.

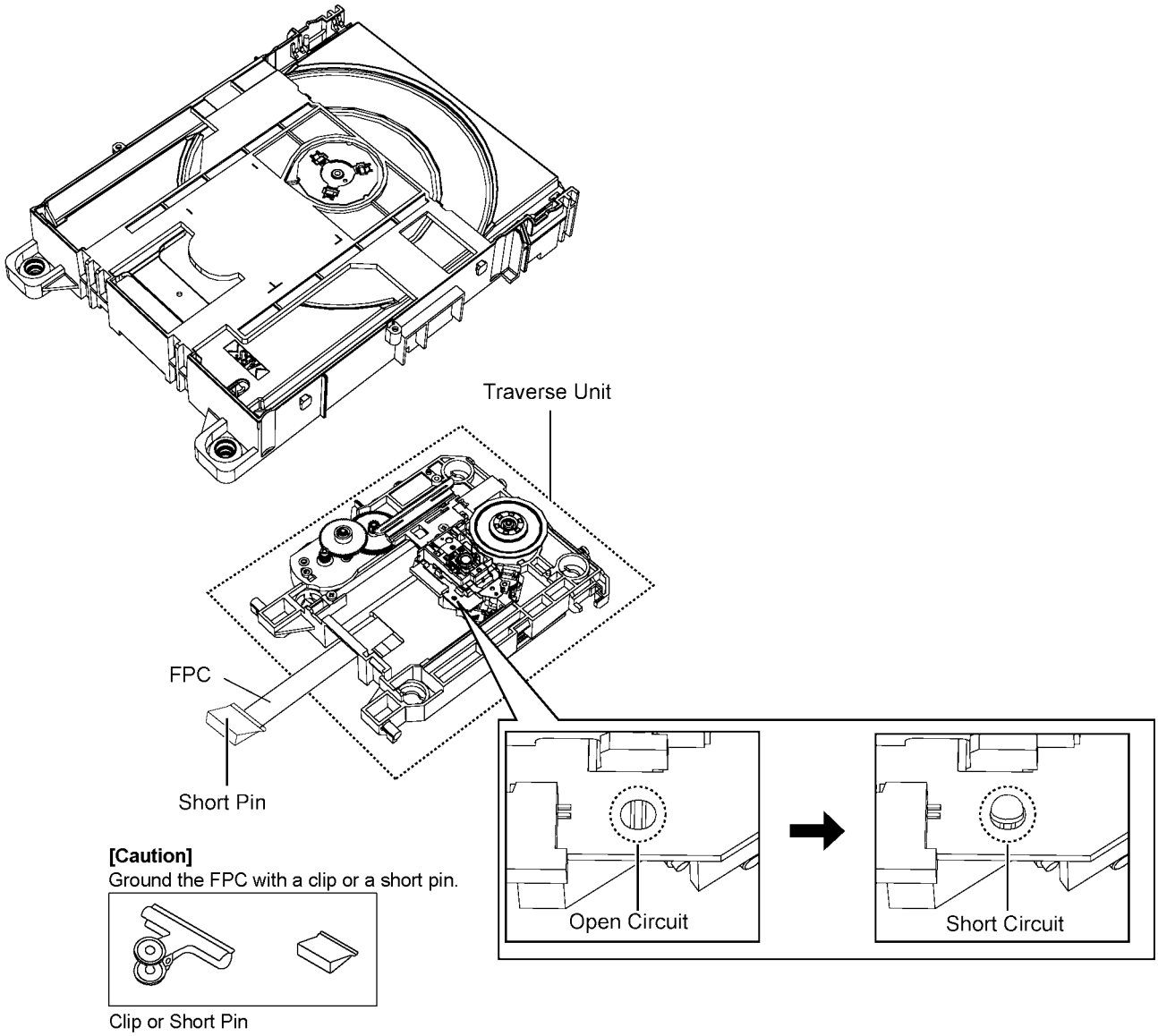

Figure 2-2

2.5. Grounding for electrostatic breakdown prevention

- As for parts that use optical pick-up (laser diode), the optical pick-up is destroyed by the static electricity of the working environment.
  Repair in the working environment that is grounded.

2.5.1. Worktable grounding

- Put a conductive material (sheet) or iron sheet on the area where the optical pickup is placed and ground the sheet.

2.5.2. Human body grounding

- Use the anti-static wrist strap to discharge the static electricity form your body Figure 2-3.

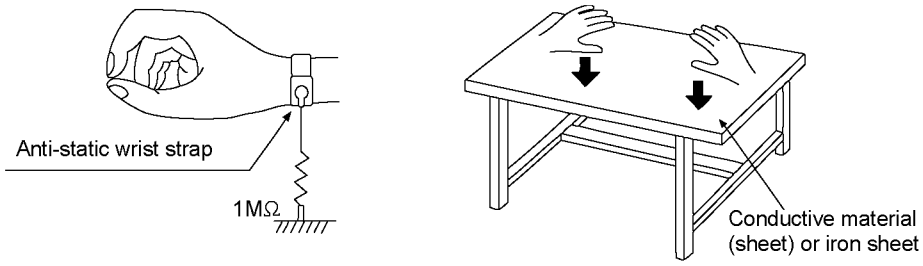

Figure 2-3

3 Service Navigation

3.1. Service Information

This service manual contains technical information which will allow service personnel's to understand and service this model.
Please place orders using the parts list and not the drawing reference numbers.

If the circuit is changed or modified, this information will be followed by supplement service manual to be filed with original service manual.

- **Micro-processor:**

1) The following components are supplied as an assembled part.
   - Micro-processor IC, IC2006 (RFKWMMAX700M)

3.2. Firmware Update Procedure

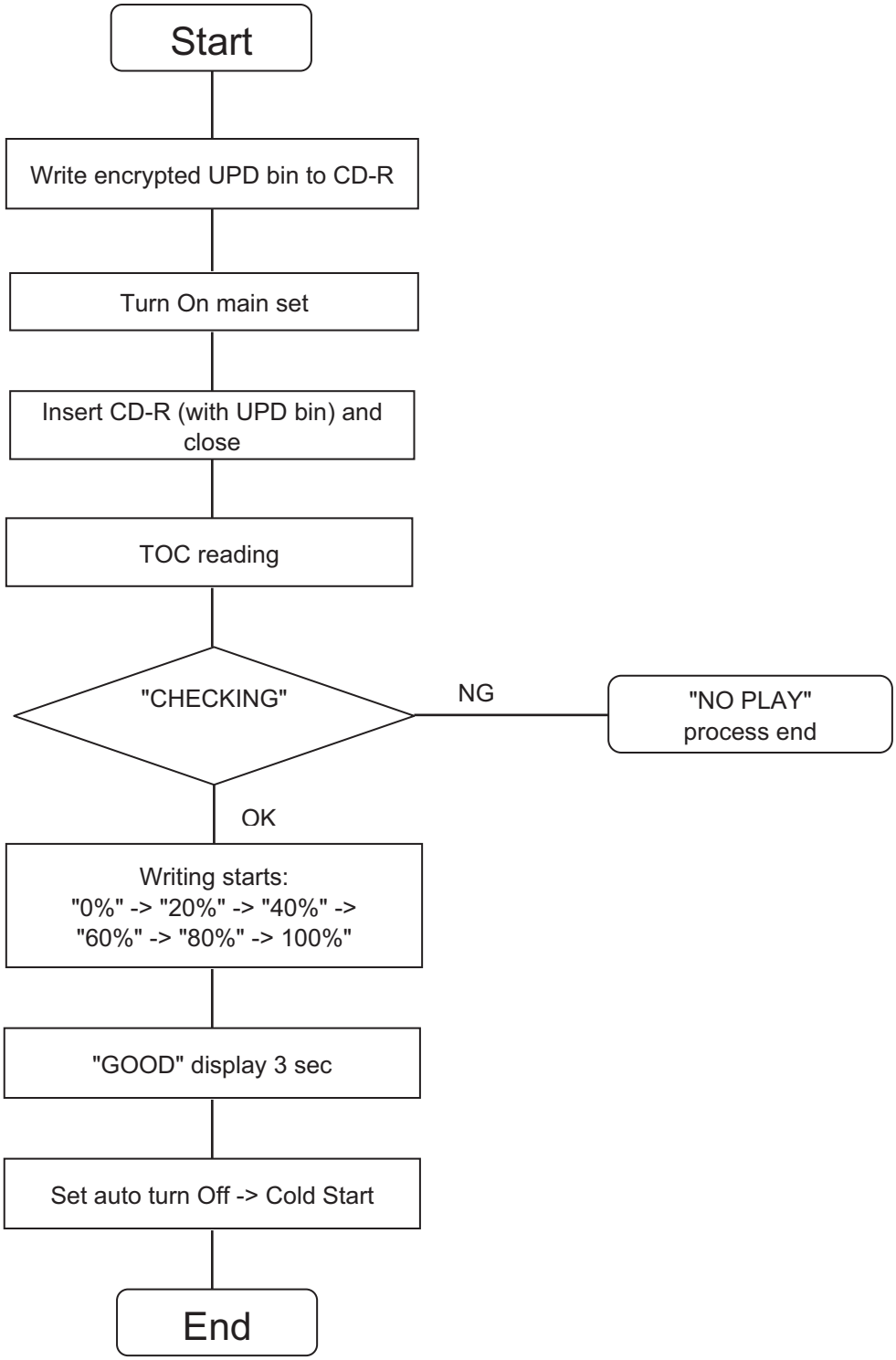

4 Specifications

■ **Amplifier section**

RMS output power stereo mode

High (both ch driven)
330 W per channel (3Ω), 1 kHz, 30% THD

Mid-Low (both ch driven)
330 W per channel (3Ω), 100 Hz, 30% THD

Low
490 W per channel (2Ω), 100 Hz, 30% THD

Total RMS stereo mode power 2300 W (30% THD)

PMPO output power 25000 W

■ **Tuner, terminals section**

Preset station FM 30 stations
AM 15 stations

Frequency modulation (FM)

Frequency range
87.50 to 108.00 MHz (50 kHz step)

Antenna terminals 75 Ω (unbalanced)

Amplitude modulation (AM)

Frequency range
522 kHz to 1629 kHz (9 kHz step)
520 kHz to 1630 kHz (10 kHz step)

Microphone jack

Sensitivity 0.7 mV, 1.1 kΩ
Terminal Mono, 3.5 mm jack (1 system)

Music port (front)

Sensitivity 100 mV, 4.7 kΩ
Terminal Stereo, 3.5 mm jack

Aux input RCA pin jack

■ **Disc section**

Disc played (8 cm or 12 cm) CD, CD-R/RW (CD-DA, MP3*)

Pick up

Wavelength 790 nm(CD)

Audio output (disc)

Number of channels 2.2 ch (FL, FR,SW)
FL = Front left channel
FR = Front right channel
SW = Subwoofer channel
*MPEG-1 Layer 3

■ **Internal memory section**

Memory

Memory size 4 GB
Media file format support MP3 (*.mp3)

Memory recording

Bit rate 128 kbps
Memory recording speed 1x, 3x max (CD only)
Recording file format MP3 (*.mp3)
Capacity of total songs recorded 1000 songs
(use 128 kbps, approximately 1 song = 4 mins)

■ **USB section**

USB port

USB standard USB 2.0 full speed
Media file format support MP3 (*.mp3)
USB device file system FAT12, FAT16, FAT32
USB port power 500 mA (max)
Bit rate 16 kbps to 320 kbps (playback)

USB recording

Bit rate 128 kbps
USB recording speed 1x, 3x max (CD only)
Recording file format MP3 (*.mp3)

■ **General**

Power supply AC 110 to 127/220 to 240 V, 50/60 Hz
Power consumption 195 W
Dimensions (W x H x D) 485 mm x 231 mm x 378 mm
Mass 4.8 kg
Operating temperature range 0 °C to +40 °C
Operating humidity range 35% to 80% RH (no condensation)
Power consumption in standby mode 0.3 W (approximate)

Note:

1. Specifications are subject to change without notice. Mass and dimension are appropriate
2. Total harmonic distortion is measured by the digital spectrum analyzer.

■ System: SC-MAX700GSK

Main Unit: SA-MAX700GSK
Speaker System: SB-MAX700GSK

5 General/Introduction

5.1. Media Information

Note on disc

- This system can play CD-R/RW with CD-DA or MP3 format content.
- Some CD-R/RW cannot be played because of the condition of the recording.
- MP3 files are defined as tracks and folders are defined as albums.
- This system can access up to:
  - CD-DA: 99 tracks
  - MP3: 999 tracks, 255 albums and 20 sessions
- Disc must conform to ISO9660 level 1 or 2 (except for extended formats).
- Recordings will not necessarily be played in the order you recorded them.

MPEG Layer-3 audio coding technology licensed from Fraunhofer IIS and Thomson.

6 Location of Controls and Components

6.1. Remote Control Key Button Operation

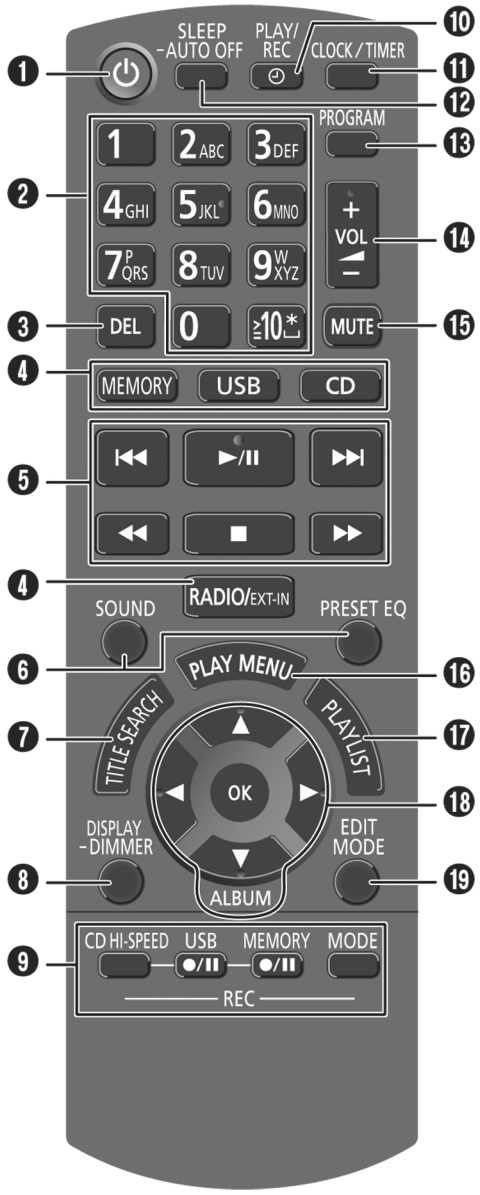

❶ **Standby/on switch** [⏻], [⏻/I]
Press to switch the unit from on to standby mode or vice versa. In standby mode, the unit is still consuming a small amount of power.

❷ Alphanumeric buttons
To select a 2-digit number
Example: 16: [≧10]→[1]→[6]
To set a character
Example: B: [2]→[2]

❸ Delete a programmed track
Delete a selected track in a playlist

❹ Select audio source

❺ Basic playback control

❻ Select the sound effects

❼ Start the title search for internal memory

❽ View content information
Decrease the brightness of the display panel
Press and hold the button to use this function.
To cancel, press and hold the button again.

❾ Recording operation control

❿ Set the play timer and record timer

⓫ Set the clock and timer

⓬ Set the sleep timer
Automatically switch off the system
When you are in disc, USB or internal memory source, the auto off function switches off the system if you do not use the system for 30 minutes.
Press and hold the button to use this function.
To cancel, press and hold the button again.

⓭ Set the program function

⓮ Adjust the volume of the system

⓯ **Mute the sound of the system**
To cancel, press the button again.
“MUTE” is also canceled when you adjust the volume or when you switch off the system.

⓰ Set the play menu item

⓱ Internal memory playlist operation

⓲ Select the option

⓳ Set the edit mode for USB B and internal memory

6.2. Main Unit Key Button Operation

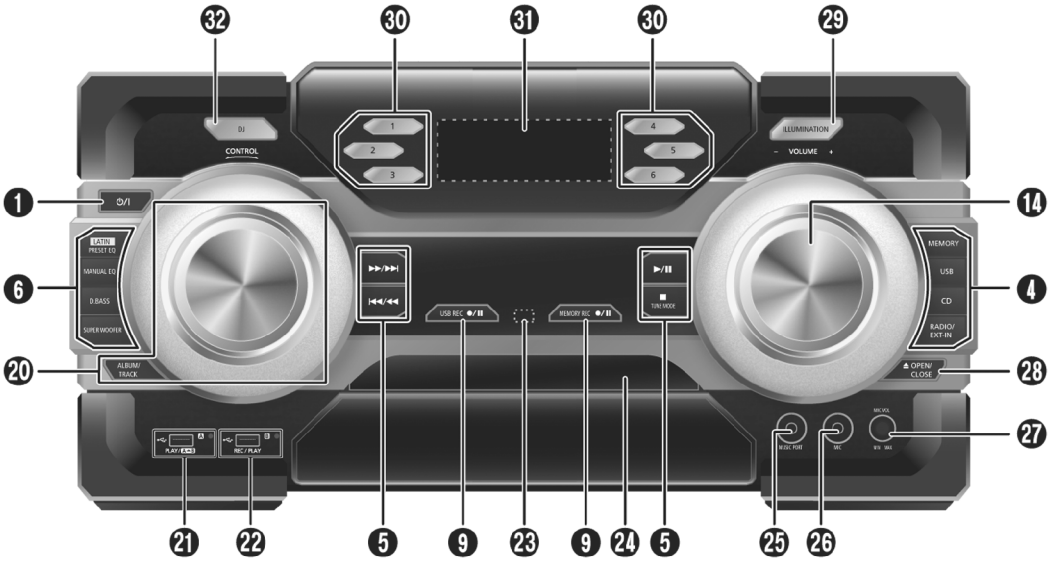

❶ **Standby/on switch** [⏻], [⏻/I]
Press to switch the unit from on to standby mode or vice versa. In standby mode, the unit is still consuming a small amount of power.

❹ Select audio source

❺ Basic playback control

❻ Select the sound effects

❾ Recording operation control

⓮ Adjust the volume of the system

⓴ Browse playlist of the internal memory
Browse tracks or albums
(CD)
Turn [CONTROL] to browse the track.
Press [▶/II] to start playback from the selection.
(MP3)
Press [ALBUM/TRACK] to select album or track and then turn [CONTROL] to browse.
Press [▶/II] to start playback from the selection.

㉑ USB A
USB port (⭠)
USB status indicator
Play MP3 tracks.
Record MP3 tracks to USB B.

㉒ USB B
USB port (⭠)
USB status indicator
Record sound or music tracks.
Play MP3 tracks.

㉓ Remote control sensor
Distance: Within approximately 7 m
Angle: Approximately 20° up and down, 30° left and right

㉔ Disc tray

㉕ Music port jack

㉖ Microphone jack

㉗ Adjust the volume of the microphone

㉘ Open or close the disc tray

㉙ Select the illumination effect

㉚ **Internal memory playlist direct buttons**
Press and hold to add a track to the corresponding playlist.
Press to select the playlist.
DJ effect direct buttons
Press [DJ] to switch on the DJ effect.
Press [1] to [6] to select the DJ effect.
To cancel, press the selected [1] to [6] again.

㉛ Display panel

㉜ **Switch on the DJ effect**
To cancel, press the button again.

7 Installation Instructions

7.1. Speaker and A/C Connection

Making the connections

Connect the AC power supply cord only after all the other connections have been made.

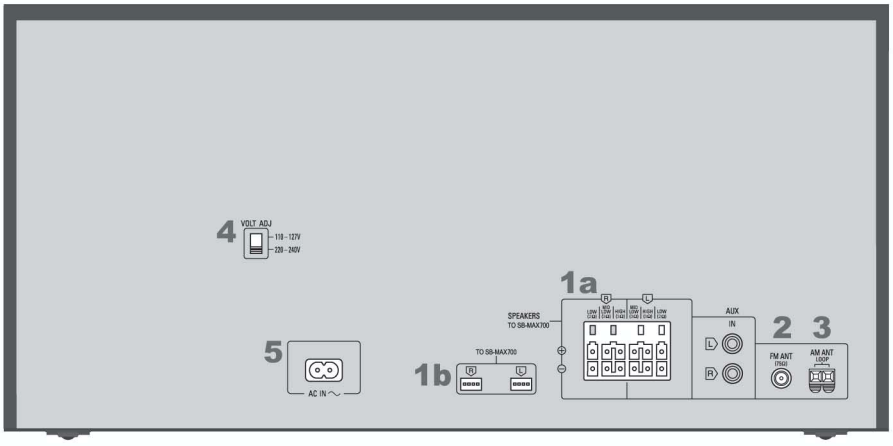

1 Connect the speakers.
Connect the speaker cables to the terminals of the same color.

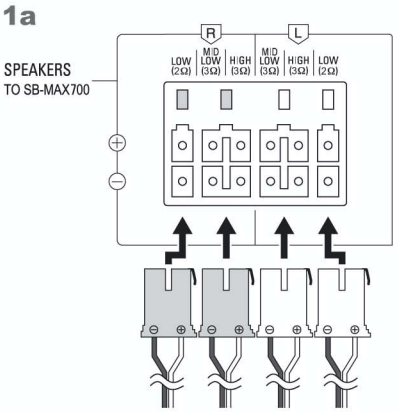

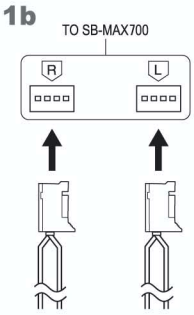

2 Connect the FM indoor antenna.
Put the antenna where reception is best.

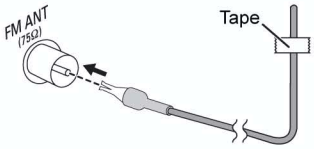

3 Connect the AM loop antenna.
Stand the antenna up on its base until it clicks.

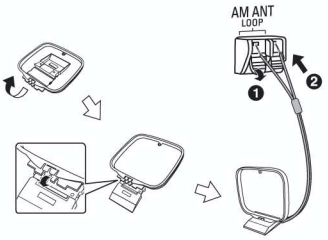

4 Set the voltage.

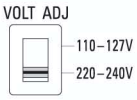

Use a flat-head screwdriver to set the voltage selector to the AC voltage in your area.

5 Connect the AC power supply cord.

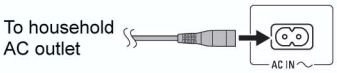

If the power plug does not fit your socket, use the power plug adapter (supplied).

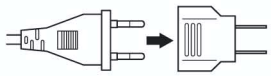

Do not use an AC power supply cord from other equipment.

Conserving power
The system consumes approximately 0.3 W when it is in standby mode. Disconnect the power supply if you do not use the system.
Some settings will be lost after you disconnect the system. You have to set them again.

8 Service Mode

8.1. Cold-Start

Here is the procedure to carry out cold-start or initialize to shipping mode.

1. Unplug AC power cord
2. Press & hold [POWER] button
3. Plug AC power cord while [POWER] button being pressed
   FL Display will show "_ _ _ _ _ _ _ _"
4. Release [POWER] button

8.2. Doctor Mode Table

8.2.1. Doctor Mode Table 1

Item		FL Display	Key Operation
Mode Name	Description		Front Key
Doctor Mode	To enter into Doctor Mode	NO DISC	In CD Mode: 1. Press [■] button on main unit follow by [4] and [7] on remote control. 2. To exit, press [DELETE] button on remote control or, press [POWER,⏻/I] button on Main Unit
EEPROM checksum check	Displaying of 1. Year Develop. 2. Model Type. 3. ROM Type. 4. Firmware Version.	(Display 1) 3UF 111 ① ② ③ ④ (Decimal) Version No. (001 ~ 999) → specific for each firmware	In CD mode: 1. Enter into Doctor Mode

8.2.2. Doctor Mode Table 2

Item		FL Display	Key Operation
Mode Name	Description		Front Key
Volume Setting Check	To check the volume setting of the main unit.	VOL 50 Press [7]: VOL50 Press [8]: VOL35 Press [9]: VOL0 Volume	In Doctor Mode: 1. Press [7], [8], [9] button on the remote control.
FL Display Check	To check the FL segment display. All segments will light up while all LED blink at 0.5s intervals.		In Doctor mode: 1. Press [1] button on the remote control. 2. To cancel this mode, press [0] button on the remote control.
Traverse Test	To determine the traverse unit operation for inner & outer access track. In this mode,ensure the CD is in the main unit. Note: Refer to Section 8.3 Figure 8-2 for process flow	00000000 The counter will increment by one. When reach 99999999 will change to 00000000 Cancellation Display CANCEL	In Doctor Mode: 1. Press [10]→[1]→[2] button on the remote control. 2. To cancel this mode, press [0] button on the remote control.
Reliability Test (Combination)	To determine the traverse unit operation & open/close operation of the mechanism. In this mode,ensure the CD is in the main unit. Note: Refer to Section 8.3 Figure 8-3 for process flow	00000000 The counter will increment by one. When reach 99999999 will change to 00000000 Cancellation Display CANCEL	In Doctor Mode: 1. Press [10]→[1]→[5] button on the remote control. 2. To cancel this mode, press [0] button on the remote control.
Loading Test	To determine the open & close operation of the CD Mechanism Unit. In this mode, the tray will open & close automatically. Note: Refer to Section 8.3 Figure 8-1 for process flow	00000000 The counter will increment by one. When reach 99999999 will change to 00000000 Cancellation Display CANCEL	In Doctor Mode: 1. Press [10]→[2]→[1] button on the remote control. 2. To cancel this mode, press [0] button on the remote control.

8.2.3. Doctor Mode Table 3

<table>
<tr><th colspan="2">Item</th><th rowspan="2">FL Display</th><th>Key Operation</th></tr>
<tr><th>Mode Name</th><th>Description</th><th>Front Key</th></tr>
<tr>
<td>CD
Self- Adjustment Test</td>
<td>To display result of self-adjustment for CD.</td>
<td>
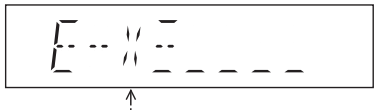

Reference table:
<table>
<tr><th>ERROR Code / Status Condition</th><th>0</th><th>1</th><th>2</th><th>4</th><th>6</th><th>8</th><th>A</th><th>C</th><th>E</th><th>F</th></tr>
<tr><td>AOC1/AOC2</td><td>O</td><td>※</td><td>O</td><td>O</td><td>O</td><td>O</td><td>O</td><td>O</td><td>O</td><td>-</td></tr>
<tr><td>ABC2/ABC1</td><td>O</td><td>-</td><td>X</td><td>O</td><td>X</td><td>O</td><td>X</td><td>O</td><td>X</td><td>-</td></tr>
<tr><td>2nd AOC1</td><td>O</td><td>-</td><td>O</td><td>X</td><td>X</td><td>O</td><td>O</td><td>X</td><td>X</td><td>-</td></tr>
<tr><td>FAGC/TAGC</td><td>O</td><td>-</td><td>O</td><td>O</td><td>O</td><td>X</td><td>X</td><td>X</td><td>X</td><td>-</td></tr>
<tr><td>AGC2</td><td>O</td><td>-</td><td>O</td><td>O</td><td>O</td><td>O</td><td>O</td><td>O</td><td>O</td><td>△</td></tr>
</table>
O : OK;
X : NG (In case that time out happens.)
※: Either one of FO AOC, TR AOC and FO coarse AGC is NG.
△: If the AGC is NG (ignore others).
</td>
<td>In Doctor Mode:
1. Press [10]→[1]→[4] button on the remote control.

To cancel this mode, press [0] button on the remote control.</td>
</tr>
<tr>
<td>CD LSI Version Check</td>
<td>For checking CD LSI Version and checksum information.</td>
<td>
(Display 1)

after 2 sec
(Display 2)
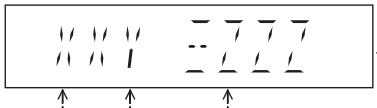

</td>
<td>In Doctor Mode:
1. Press [4] button on the remote control.

To cancel this mode, press [0] button on the remote control.</td>
</tr>
</table>

8.3. Reliability Test Mode (CD Mechanism Unit)

Below is the process flow chart of the aging test for the CD Mechanism Unit .

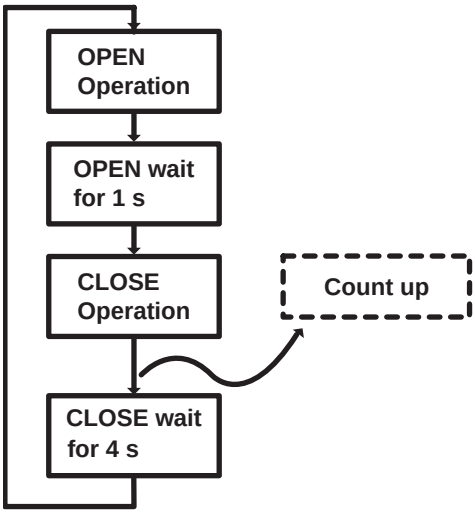

Fig. 1. Reliability Test (Loading)

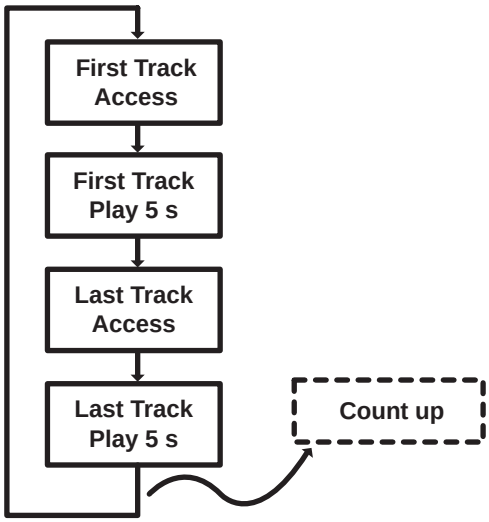

Fig. 2. Reliability Test (Traverse)

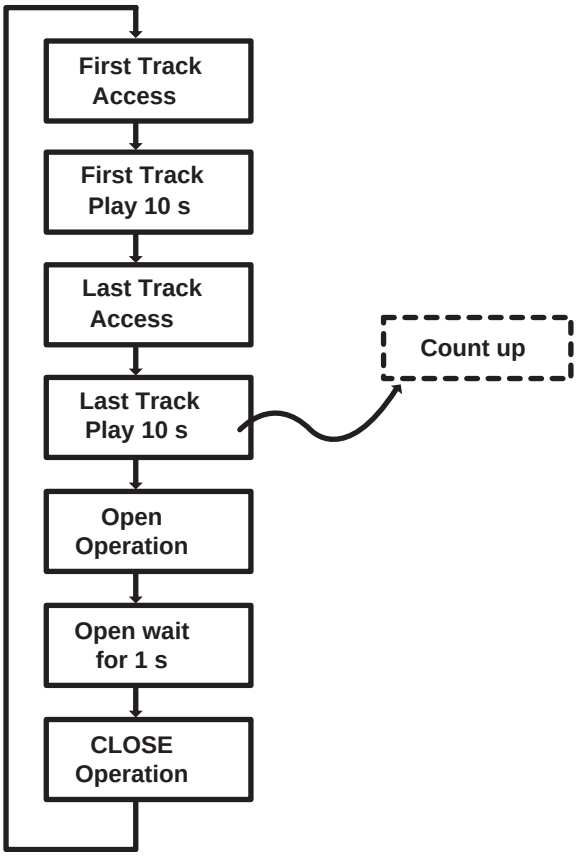

Fig. 3. Reliability Test (Combination)

8.4. Self-Diagnostic Mode

Item		FL Display	Key Operation
Mode Name	Description		Front Key
Self Diagnostic Mode	To enter into self diagnostic checking	--	Step 1: Select CD mode (Ensure no disc is inserted). Step 2: Press & hold [■] button follow by [▶▶/▶▶I] on main unit for 2 seconds.
Error code information	System will perform a check on any unusual/error code from the memory	Example: -- F26	Step 1: In self diagnostic mode, Press [■] on main unit. To exit, press [^/I] on main unit or remote control.
Delete error code	To clear the stored in memory (EEPROM IC)	CLEAR	Step 1: In self diagnostic mode, Press [0] on remote control. To exit, press [^/I] on main unit or remote control.
Cold Start	To active cold start upon next AC power up when reset start is execute the next time.	-- -- -- -- -- -- -- --	In self diagnostic mode: 1. Press [3] button on the remote control.

8.5. Self-Diagnostic Error Code Table

Self-Diagnostic Function (Refer Section 8.4. Self-Diagnostic Mode) provides information on any problems occurring for the unit and its respective components by displaying the error codes. These error code such as U**, H** and F** are stored in memory and held unless it is cleared.

The error code is automatically display after entering into self-diagnostic mode.

8.5.1. Power Supply Error Code Table

Error Code	Diagnosis Contents	Description of error	Automatic FL Display	Remarks
F61	Power Amp IC output abnormal	Upon power on, PCONT=HIGH, DC_DET_AMP after checking LSI.	F61	Press [■] on main unit for next error.
F76		DC_DET_PWR	F76	
F61-76		Both DCDET (NG)	F61-F76	
F26		Communication between CD servo LSI and micro-P abnormal (Radio, USB)	F26	

8.5.2. CD Mechanism Error Code Table (CD Mechanism Unit)

Error Code	Diagnostic Contents	Description of error	Automatic FL Display	Remarks
CD H15	CD Open Abnormal	During operation POS_SW_R On fail to be detected with 4 sec. Error No. shall be clear by force or during cold start.	CD H15	Press [■] on main unit for next error.
CD H16	CD Closing Abnormal	During operation POS_SW_CEN On fail to be detected with 4 sec. Error No. shall be clear by force or during cold start.	CD H16	Press [■] on main unit for next error.
F26	Communication between CD servo LSI and micro-p abnormal.	During switch to CD function, if SENSE = “L” within failsafe time of 20ms.	F26	Press [■] on main unit for next error.

8.6. Sales Demonstration Lock Function

8.6.1. Entering into Sales demonstration lock mode

Here is the procedures to enter into the Sales demonstration lock mode.
Step 1: Turn on the unit.
Step 2: Select to any mode function.
Step 3: Press and hold [⏏OPEN/CLOSE] and [CD] keys for 5 sec or more.
The display will show upon entering into this mode for 2 sec..

Note: [⏏OPEN/CLOSE] button is invalid and the main unit displays “LOCKED” while the lock function mode is entered.

8.6.2. Cancellation of Sales demonstration lock mode

Step 1: Turn on the unit.
Step 2: Select to any mode function.
Step 3: Set volume to Vol 19.
Step 4: Press and hold [⏏OPEN/CLOSE] and [CD] keys for 5 sec or more.
The display will show upon entering into this mode for 2 sec..

9 Troubleshooting Guide

"Contents for this section is not available at time of issue"

10 Disassembly and Assembly Instructions

Caution Note:

- This section describes the disassembly and/or assembly procedures for all major printed circuit boards & main components for the unit. (You may refer to the section of “Main components and P.C.B Locations” as described in the service manual)
- **Before carrying out the disassembly process, please ensure all the safety precautions & procedures are followed.**
- **During the disassembly and/or assembly process, please handle with care as there may be chassis components with sharp edges.**
- **Avoid touching heatsinks due to its high temperature after prolong use. (See caution as described below)**

CAUTION: HOT!!
PLEASE DO NOT
TOUCH THE HEAT SINK

- **During disassembly and assembly, please ensure proper service tools, equipments or jigs is being used.**
- **During replacement of component parts, please refer to the section of “Replacement Parts List” as described in the service manual.**
- **Select items from the following indexes when disassembly or replacement are required.**
- Disassembly of Top Cabinet
- Disassembly of Front Panel Unit
- Disassembly of FL Display P.C.B.
- Disassembly of Illumination Button P.C.B.
- Disassembly of Control P.C.B.
- Disassembly of Control Jog LED P.C.B.
- Disassembly of Volume P.C.B.
- Disassembly of Volume Jog LED P.C.B.
- Disassembly of Remote Sensor P.C.B.
- Disassembly of USB P.C.B.
- Disassembly of Mic P.C.B.
- Disassembly of LED P.C.B.
- Disassembly of CD Lid P.C.B.
- Disassembly of CD Mechanism Unit
- Disassembly of Rear Panel
- Disassembly of Main P.C.B.
- Replacement of Digital Amplifier IC (IC2501,IC2502,IC2503,IC2504)
- Disassembly of SMPS P.C.B. and Voltage Selector P.C.B.
- Replacement of Switching Regulator (Q5700)
- Replacement of Rectifier Diode (D5801)
- Replacement of Rectifier Diode (D5802)
- Disassembly of CD Interface P.C.B.

10.1. Screw Types

CAUTION NOTE:
Please use original screw and at correct locations.

Below shown is part no. of different screw types used:

- a :RHD30007-K2J
- b :RHD30119-S
- c :RHDX30005-J
- d :RHD26046-L
- e :RHDX031008
- f :RHD26043-1
- h :XTN2+6GFJ

10.2. Disassembly Flow Chart

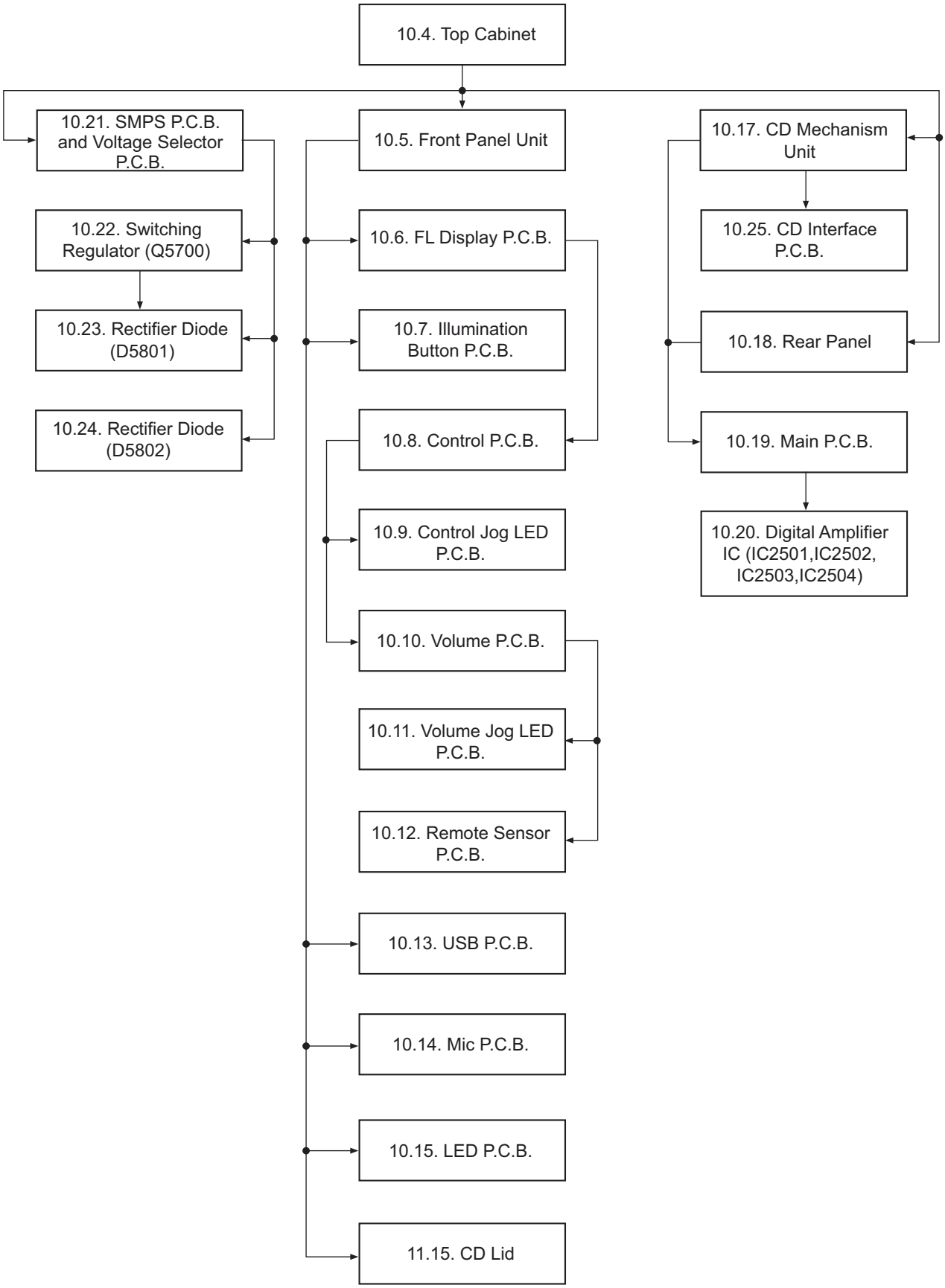

10.3. Main Components and P.C.B. Locations

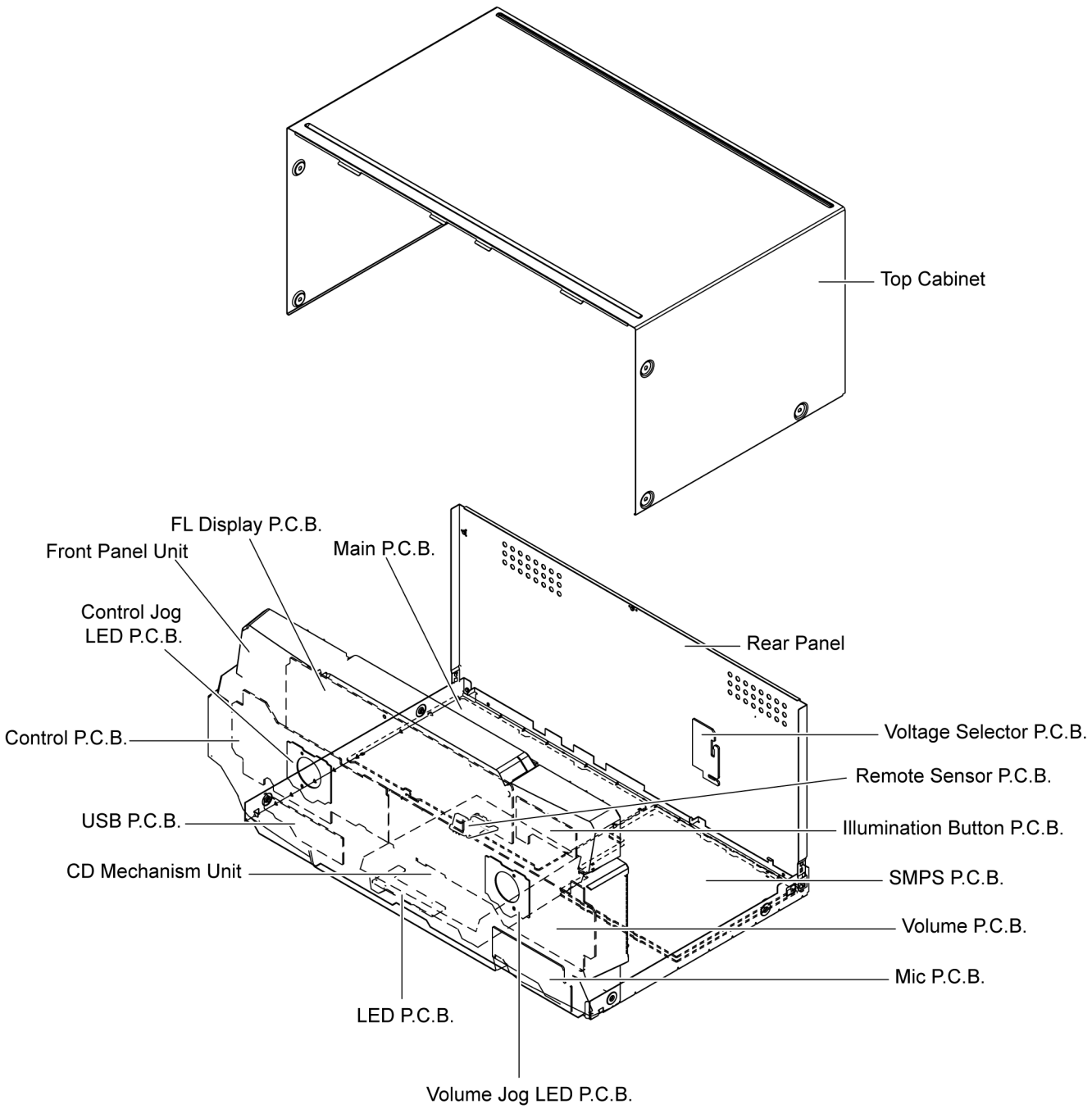

10.4. Disassembly of Top Cabinet

Step 1 Remove 3 screws.

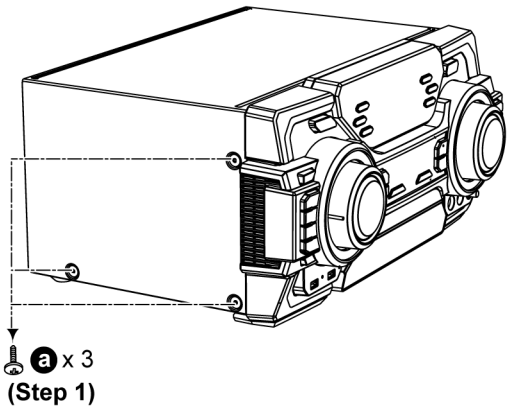

Step 2 Remove 3 screws.

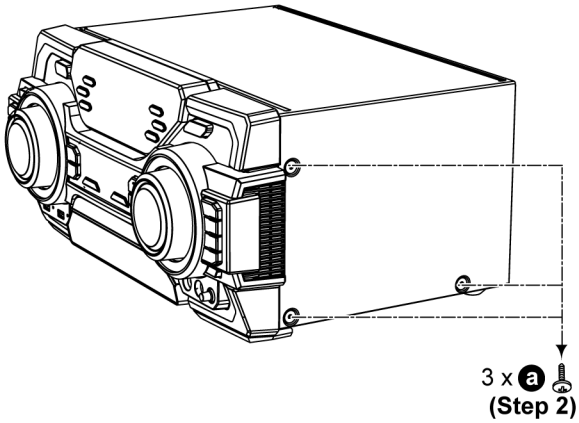

Step 3 Remove 5 screws.
Step 4 Slightly release both sides of the Top Cabinet outwards as arrow shown.

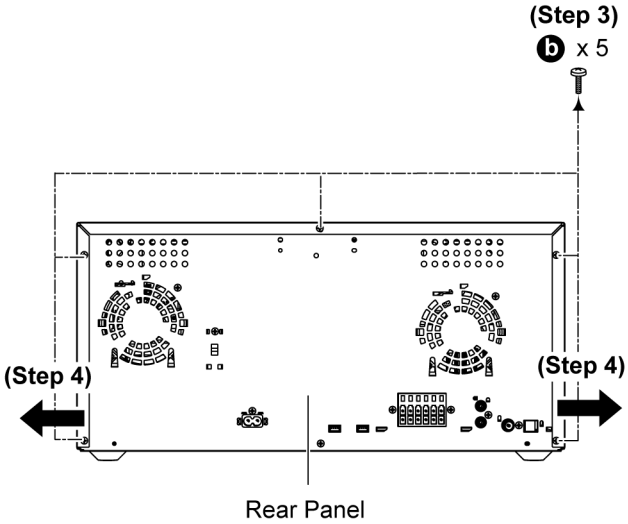

Step 5 Slightly lift up the Top Cabinet.
Step 6 Remove the Top Cabinet.

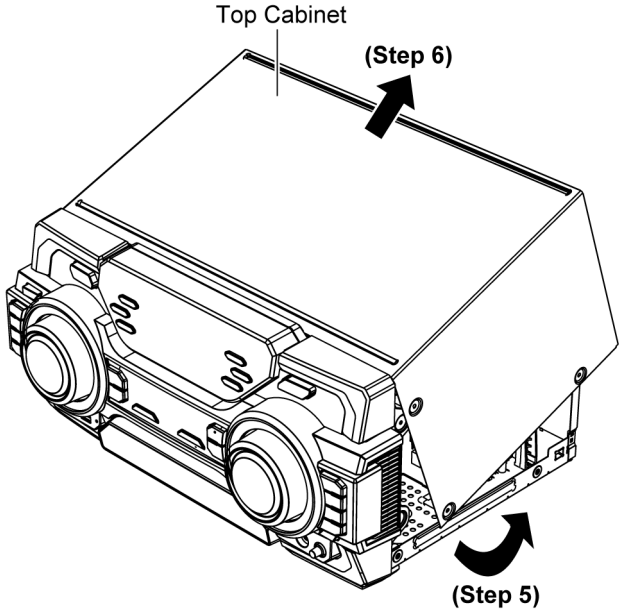

Caution: During assembling, ensure that the catches of the Top Cabinet catches are properly located & inserted into the Front Panel Unit as shown.

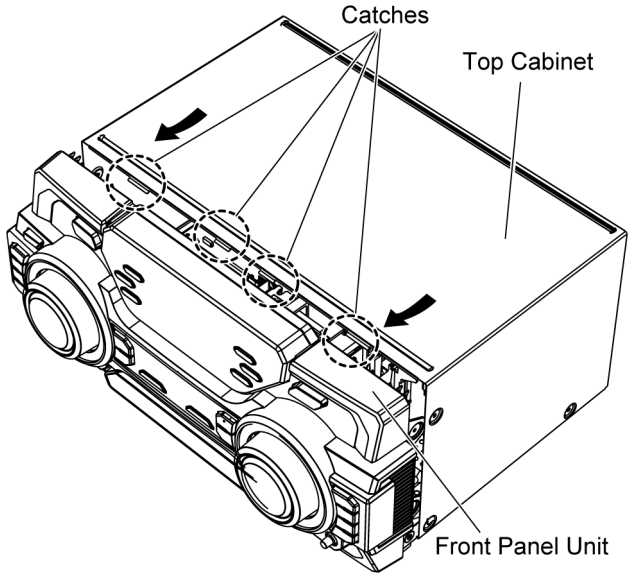

10.5. Disassembly of Front Panel Unit

- **Refer to "Disassembly of Top Cabinet".**

Step 1 Remove 1 screw.
Step 2 Detach 10P FFC at the connector (CN2002) on Main P.C.B..
Step 3 Detach 11P Cable at the connector (CN2001) on Main P.C.B..
Step 4 Detach 30P FFC at the connector (CN2004) on Main P.C.B..
Step 5 Detach 5P Wire at the connector (FP3001) on Main P.C.B..

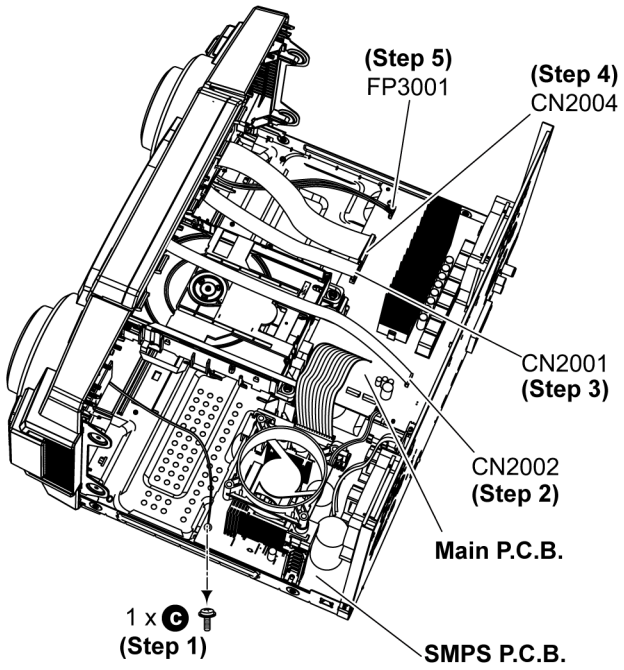

Step 6 Release tabs at the bottom of the unit.

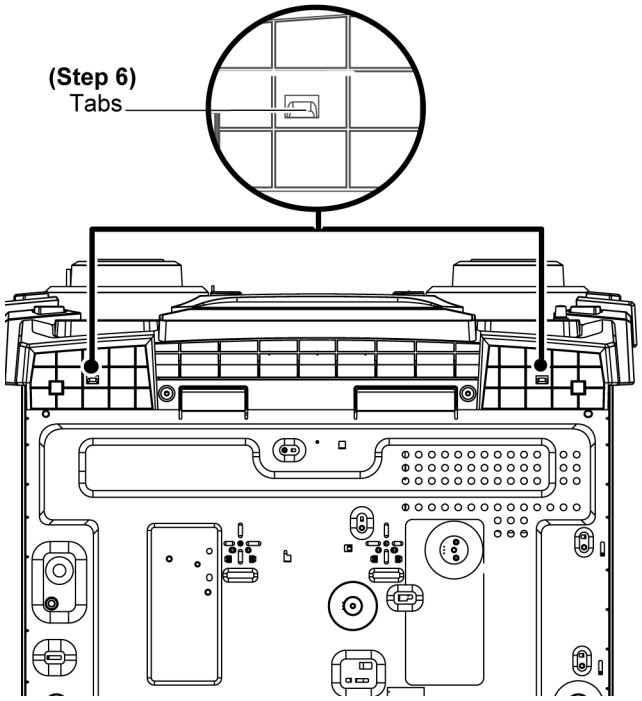

Step 7 Remove the Front Panel Unit

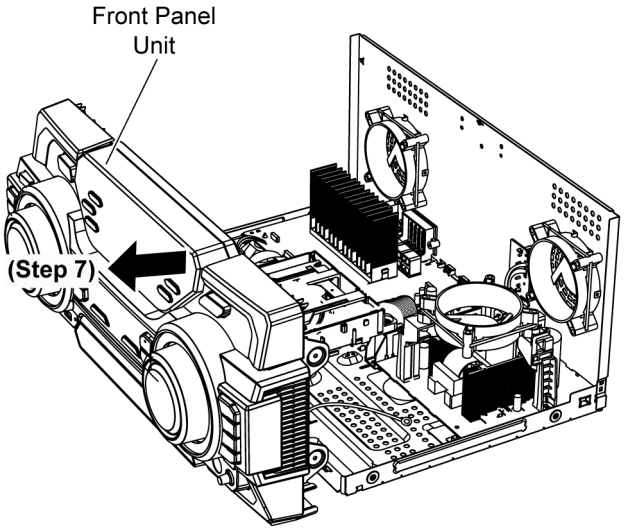

10.6. Disassembly of FL Display P.C.B.

- **Refer to "Disassembly of Top Cabinet".**
- **Refer to "Disassembly of Front Panel Unit".**

Step 1 Remove 6 screws.
Step 2 Release 4 catches.
Step 3 Lift up the FL Display P.C.B..

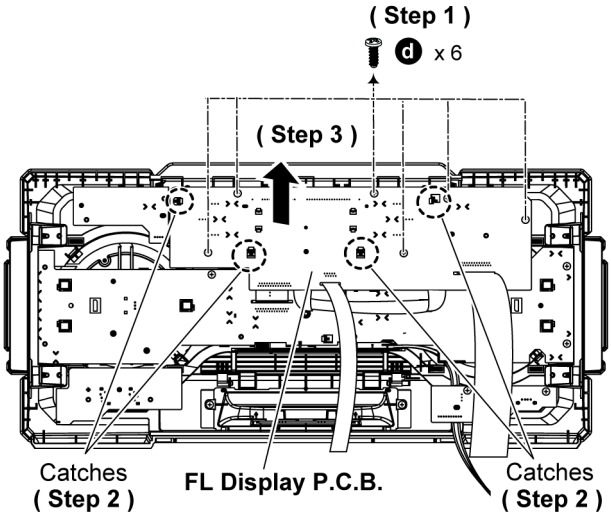

Step 4 Detach 30P FFC at a connector (CN6002) on the FL Display P.C.B..

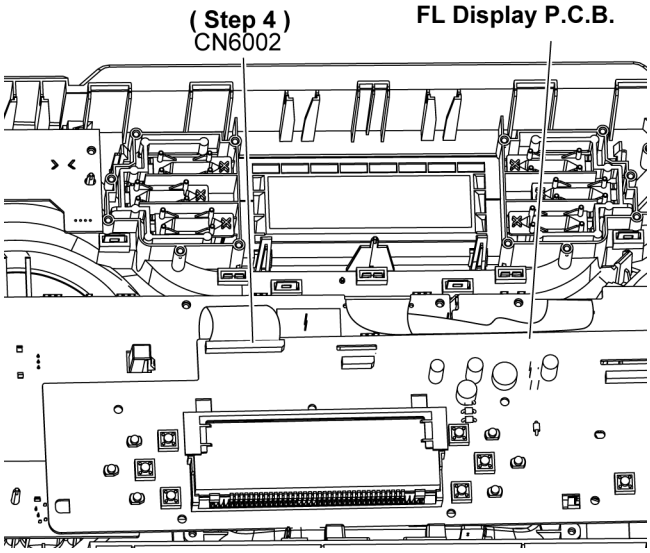

Caution: During assembling, ensure that the FL Display P.C.B. is properly located and fully catched onto Front Panel Unit.

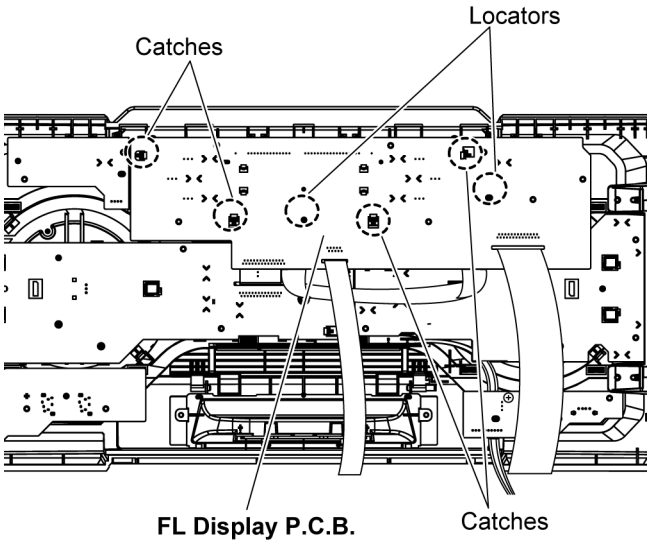

10.7. Disassembly of Illumination Button P.C.B.

- **Refer to "Disassembly of Top Cabinet".**
- **Refer to "Disassembly of Front Panel Unit".**

Step 1 Remove 2 screws.
Step 2 Detach 2P Cable at a connector (CN6800) on the Illumination Button P.C.B..
Step 3 Lift up to remove the Illumination Button P.C.B..

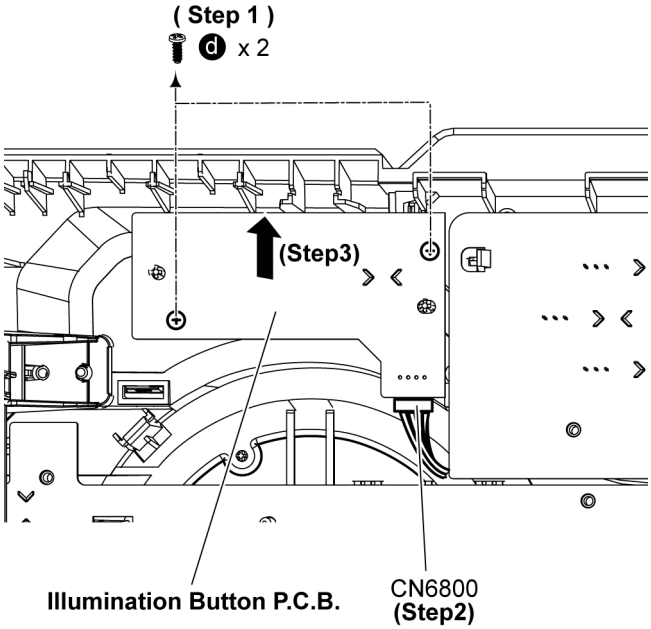

10.8. Disassembly of Control P.C.B.

- **Refer to "Disassembly of Top Cabinet".**
- **Refer to "Disassembly of Front Panel Unit".**
- **Refer to "Disassembly of FL Display P.C.B.".**

Step 1 Remove the Control Knob.

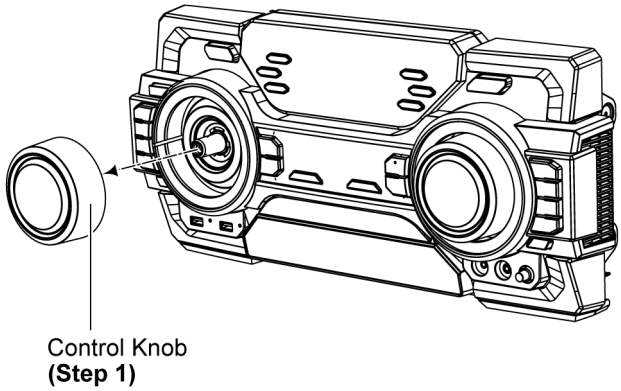

Step 2 Remove 2 screws.
Step 3 Remove the Side Cover.

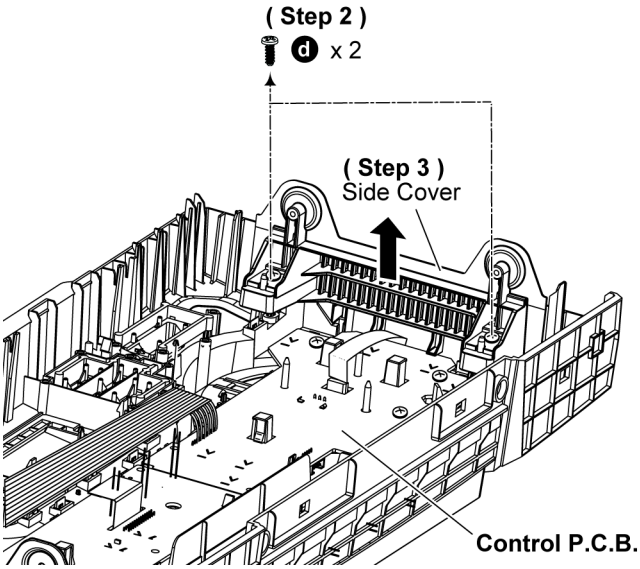

Step 4 Remove 4 screws.
Step 5 Detach 6P FFC at a connector (CN6111) on the Control Jog LED P.C.B..

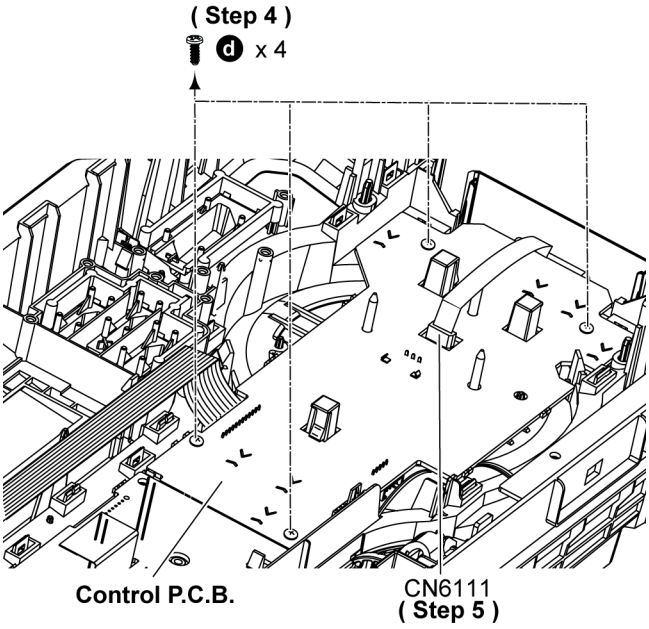

Step 6 Release catches by following the sequences (1-3).

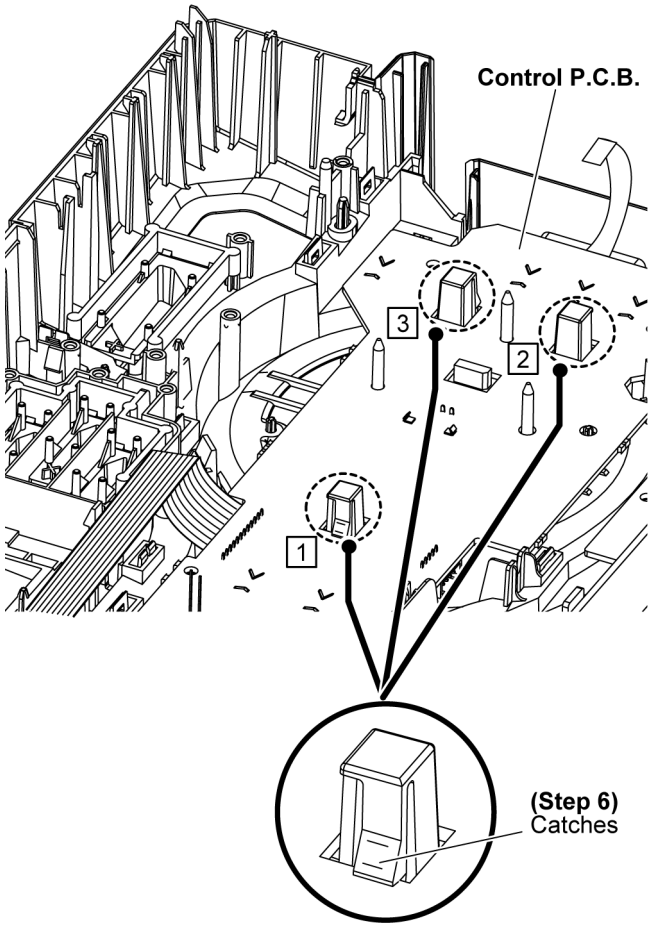

Step 7 Detach 12P Cable at a connector (CN6200) on the Control P.C.B..

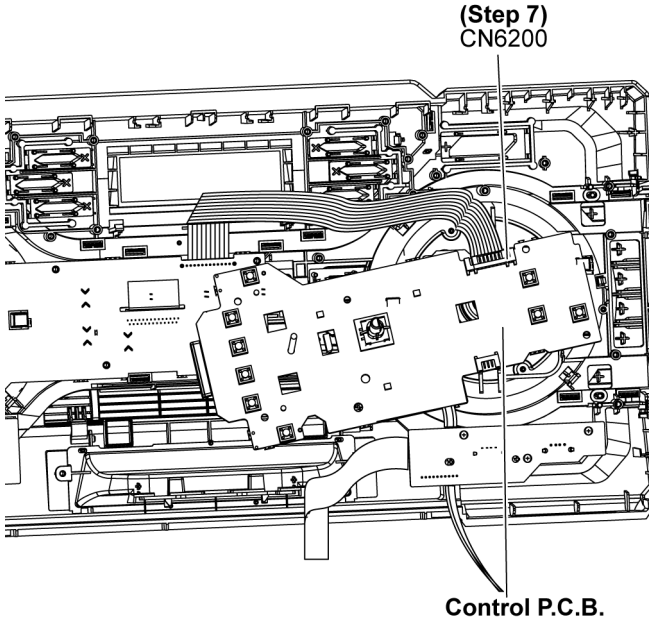

Caution: During assembling, ensure that the Control P.C.B. is properly located and fully catched onto the Front Panel Unit.

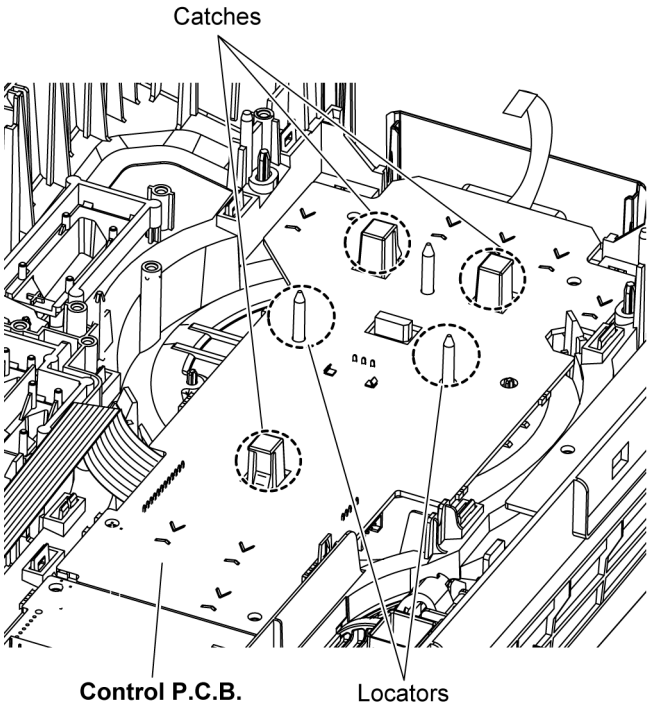

10.9. Disassembly of Control Jog LED P.C.B.

- **Refer to "Disassembly of Top Cabinet".**
- **Refer to "Disassembly of Front Panel Unit".**
- **Refer to "Disassembly of FL Display P.C.B.".**
- **Refer to "Disassembly of Control P.C.B.".**

Step 1 Lift up to remove the Control Jog LED P.C.B..

Caution: During assembling, ensure that the Control Jog LED P.C.B. is properly located & fully seated onto the Front Panel Unit.

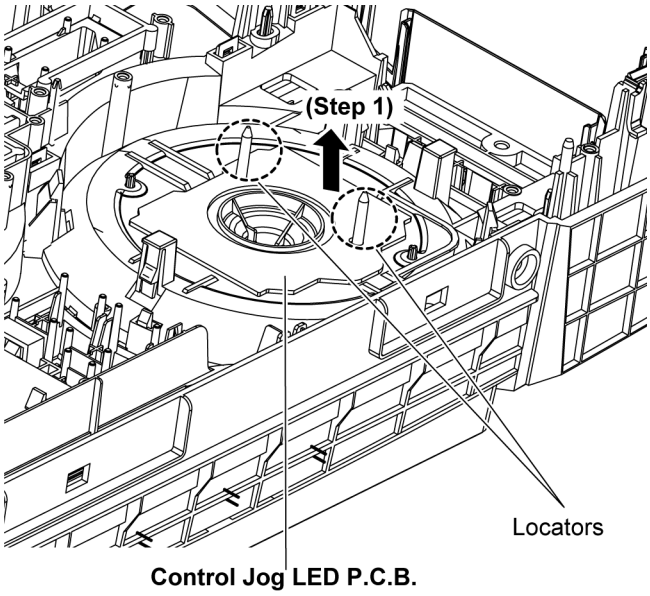

10.10. Disassembly of Volume P.C.B.

- **Refer to "Disassembly of Top Cabinet".**
- **Refer to "Disassembly of Front Panel Unit".**
- **Refer to "Disassembly of FL Display P.C.B.".**
- **Refer to "Disassembly of Control P.C.B.".**

Step 1 Remove the Volume Knob.

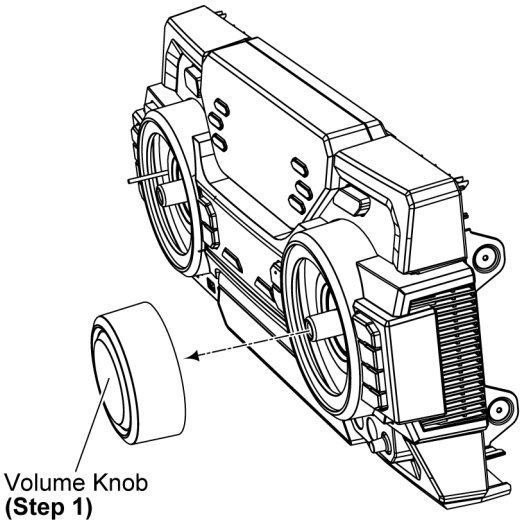

Step 2 Remove 2 screws.

Step 3 Remove the Side Cover.

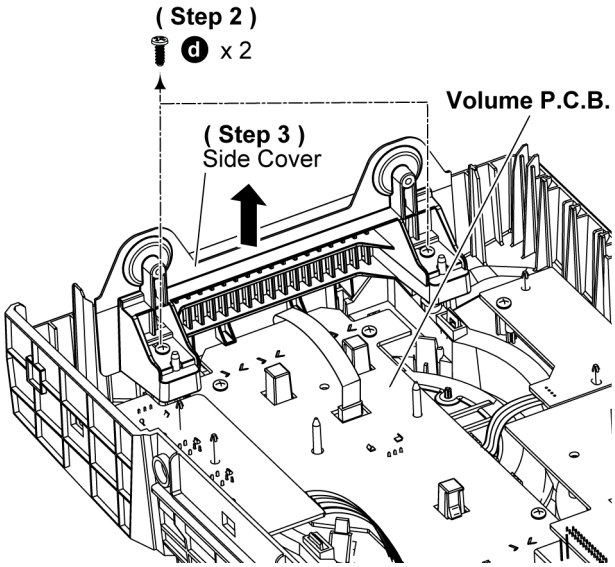

Step 4 Remove 5 screws.
Step 5 Detach 6P FFC at a connector (CN6112) on the Volume Jog LED P.C.B..
Step 6 Detach 4P Cable at a connector (CN5700) on the LED P.C.B..
Step 7 Detach 2P Cable at a connector (CN6800) on the Illumination Button P.C.B..
Step 8 Detach 8P Cable at a connector (CN6103) on the Mic P.C.B..

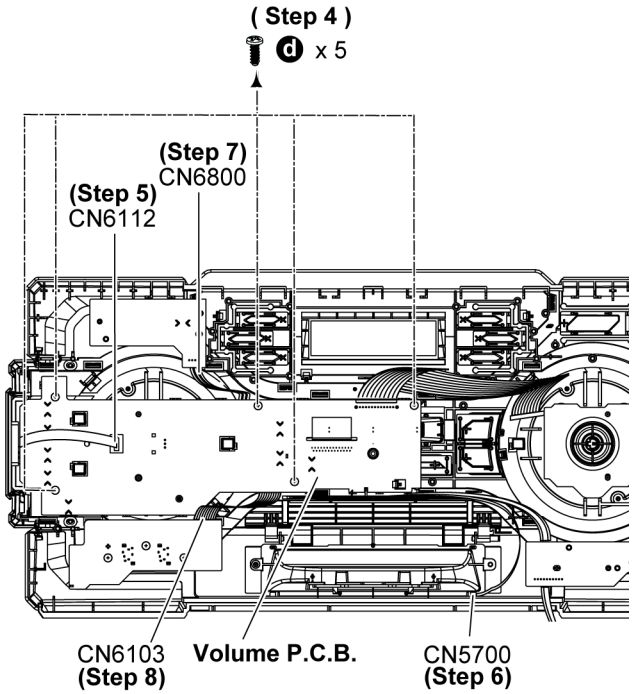

Step 9 Release catches by following the sequences (1-4).

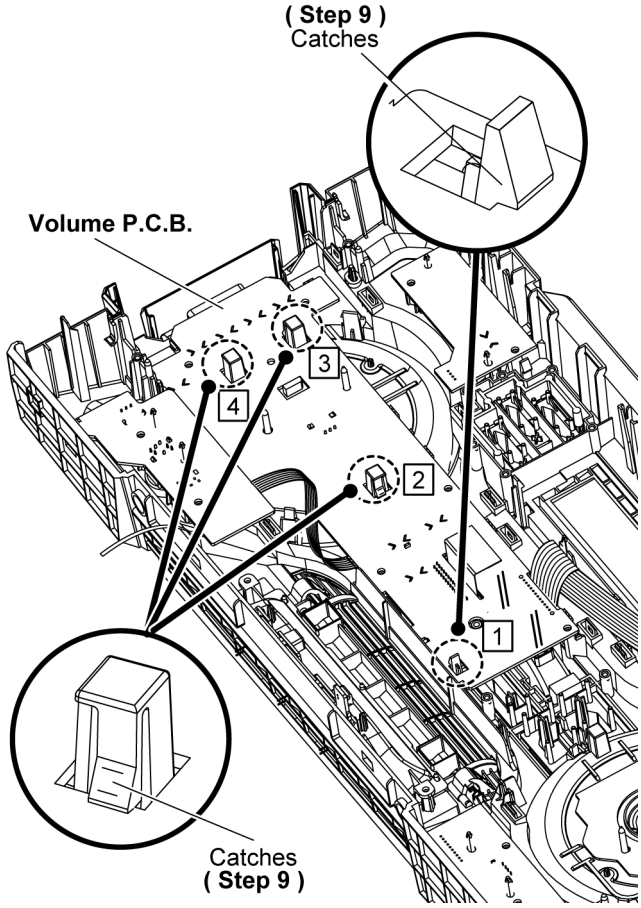

Caution: During assembling, ensure that the Volume P.C.B. is properly located and fully catched onto the Front Panel Unit.

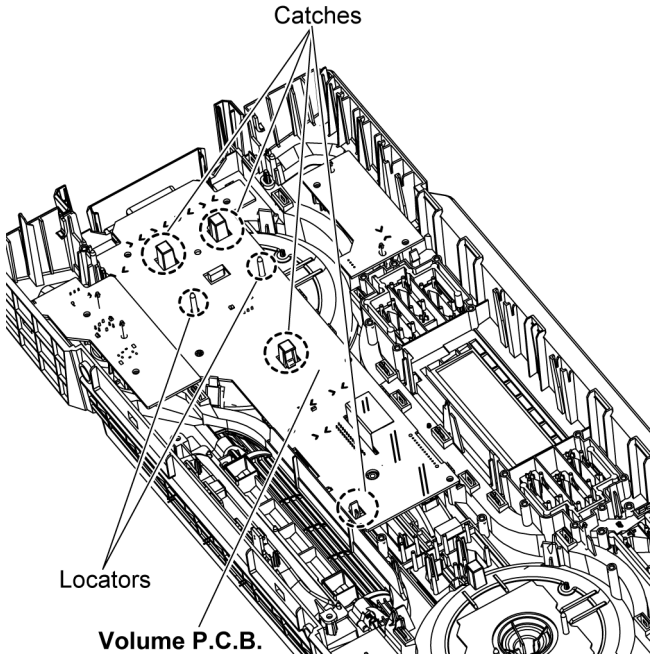

10.11. Disassembly of Volume Jog LED P.C.B.

- **Refer to “Disassembly of Top Cabinet”.**
- **Refer to “Disassembly of Front Panel Unit”.**
- **Refer to “Disassembly of FL Display P.C.B.”.**
- **Refer to “Disassembly of Control P.C.B.”.**
- **Refer to “Disassembly of Volume P.C.B.”.**

Step 1 Lift up to remove the Volume Jog LED P.C.B..

Caution: During assembling, ensure that the Volume Jog LED P.C.B. is properly located & fully seated onto the Front Panel Unit.

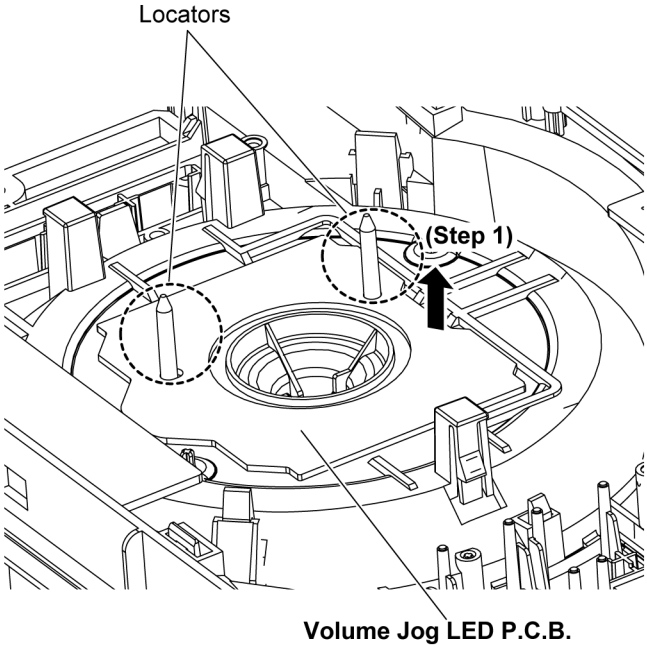

10.12. Disassembly of Remote Sensor P.C.B.

- **Refer to “Disassembly of Top Cabinet”.**
- **Refer to “Disassembly of Front Panel Unit”.**
- **Refer to “Disassembly of FL Display P.C.B.”.**
- **Refer to “Disassembly of Control P.C.B.”.**
- **Refer to “Disassembly of Volume P.C.B.”.**

Step 1 Remove the the Remote Sensor P.C.B..

Caution: During assembling, ensure that the Remote Sensor P.C.B. is properly inserted & fully connected to the FL Display P.C.B..

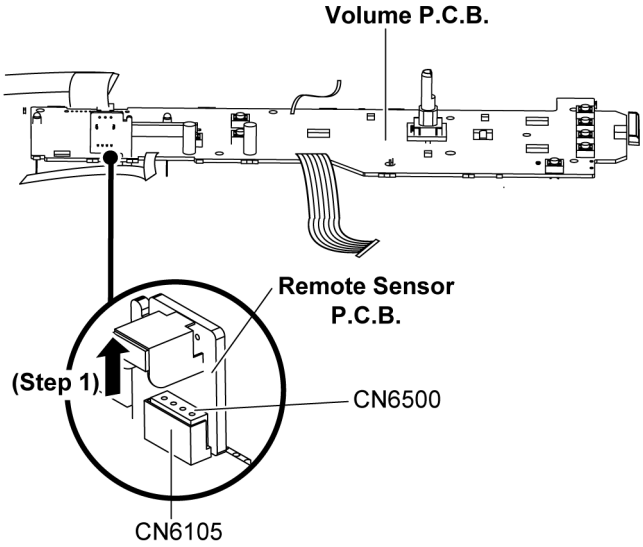

10.13. Disassembly of USB P.C.B.

- **Refer to “Disassembly of Top Cabinet”.**
- **Refer to “Disassembly of Front Panel Unit”.**

Step 1 Remove 3 screws.

Step 2 Lift up to remove the USB P.C.B..

Caution: During assembling, ensure that the USB P.C.B. is properly located & fully seated onto the Front Panel Unit.

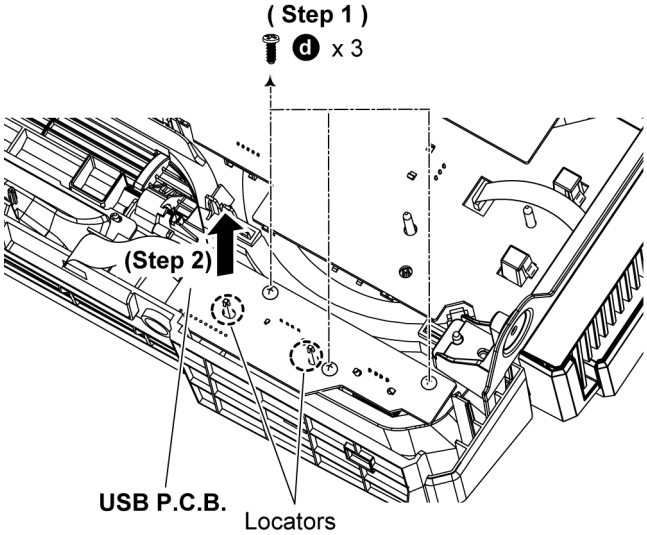

10.14. Disassembly of Mic P.C.B.

- **Refer to “Disassembly of Top Cabinet”.**
- **Refer to “Disassembly of Front Panel Unit”.**

Step 1 Remove the Mic Knob.

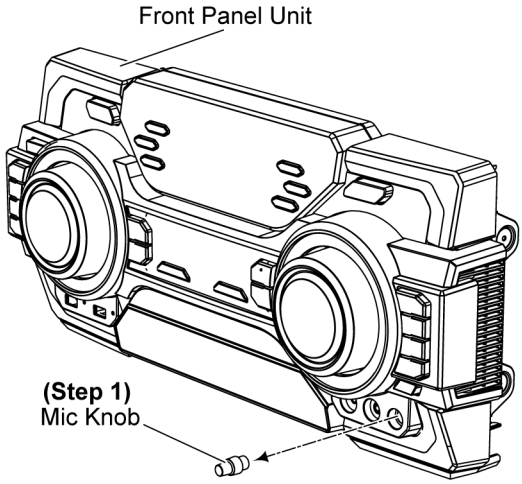

Step 2 Detach 8P Cable at a connector (CN6103) on the Mic P.C.B..

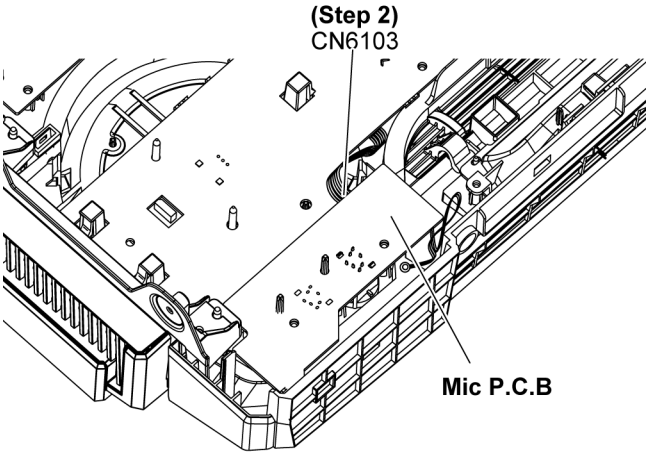

Step 3 Remove 2 screws.

Step 4 Remove the Mic P.C.B..

Caution: During assembling, ensure that the Mic P.C.B. is properly located & fully seated onto the Front Panel Unit.

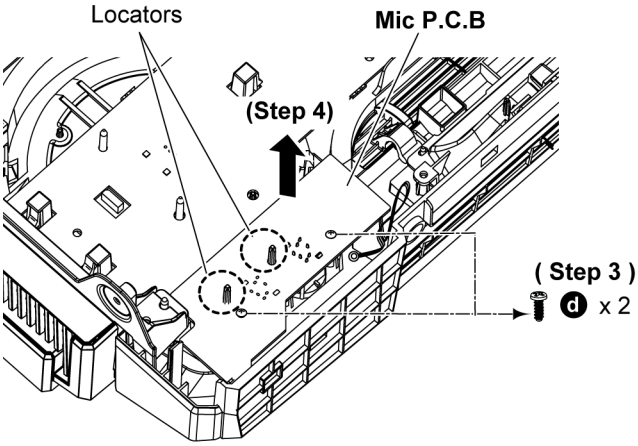

10.15. Disassembly of LED P.C.B.

- **Refer to “Disassembly of Top Cabinet”.**
- **Refer to “Disassembly of Front Panel Unit”.**

Step 1 Remove 2 screws.

Step 2 Detach 4P Cable at a connector (CN5700) on LED P.C.B..

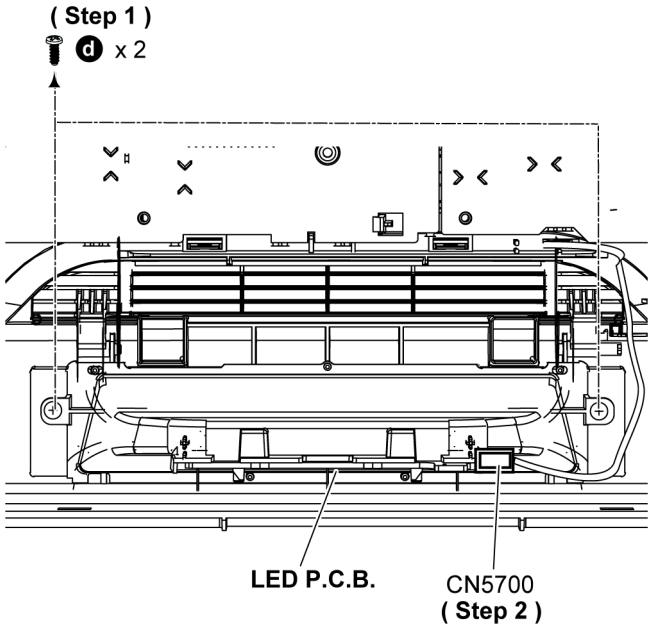

Step 3 Release 2 catches.

Step 4 Remove LED P.C.B..

Caution: During assembling, ensure that the LED P.C.B. is properly located and fully catched onto Lighting House.

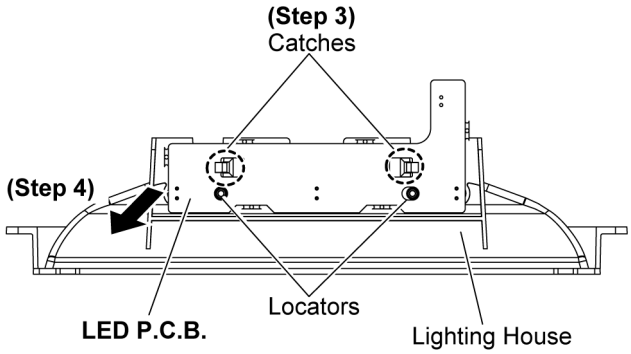

10.16. Disassembly of CD Lid

- **Refer to “Disassembly of Top Cabinet”.**
- **Refer to “Disassembly of Front Panel Unit”.**

Step 1 Remove the spring as arrow shown in order of sequence (1) to (3).

Caution: During assembling, ensure that the spring is assembly at correct position.

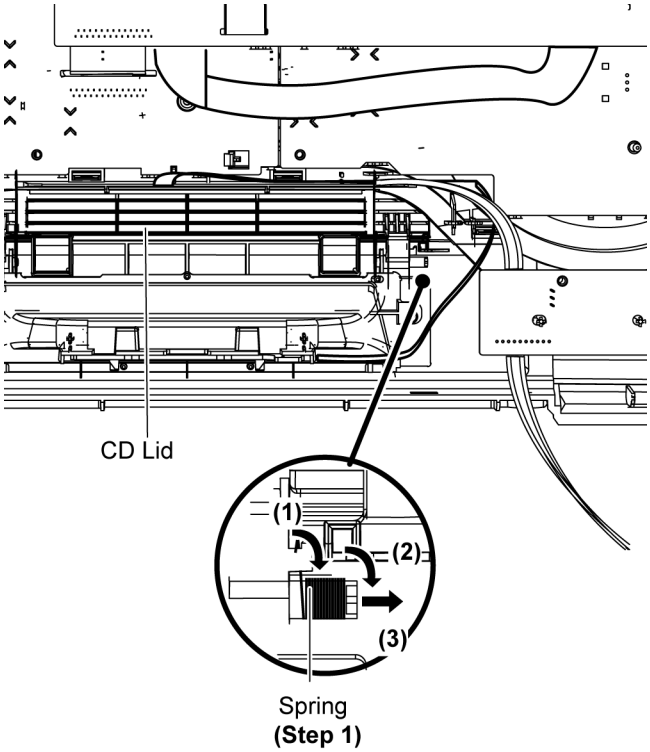

Step 2 Remove the CD Lid as arrow shown.

Step 3 Remove the CD Lid from the guide.

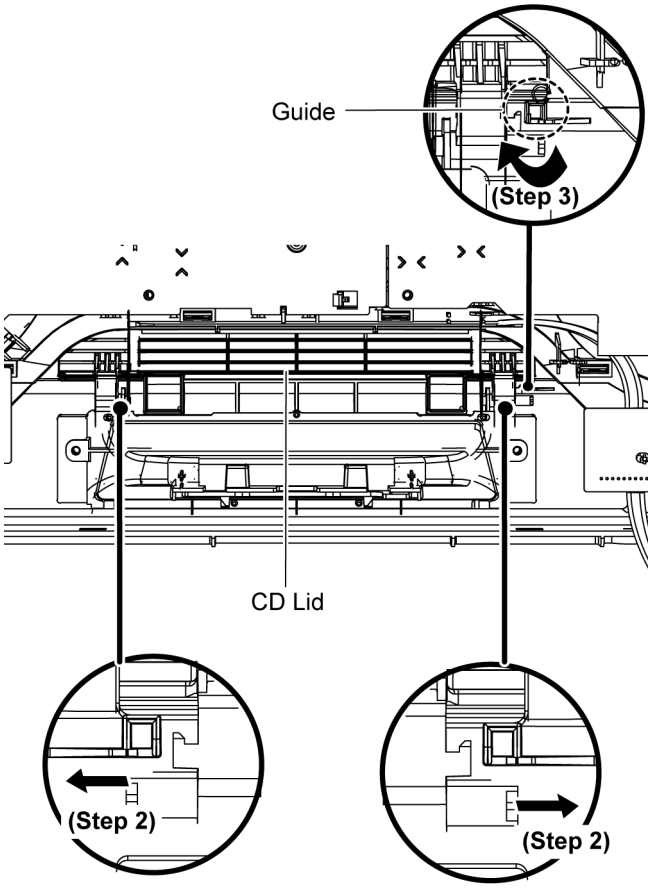

10.17. Disassembly of Rear Panel

- **Refer to “Disassembly of Top Cabinet”.**

Step 1 Remove 9 screws.

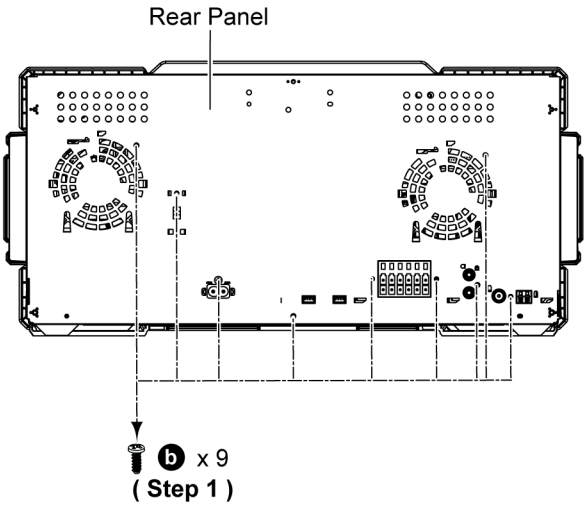

Step 2 Detach the Voltage Selector P.C.B. from Rear Panel.
Step 3 Release catches on fans.
Step 4 Remove 2 fans.

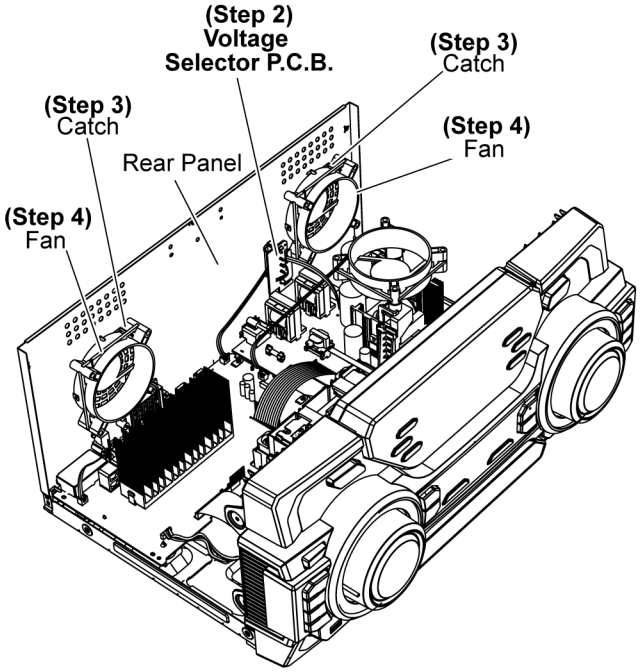

Step 5 Release 2 tabs.
Step 6 Remove the Rear Panel.

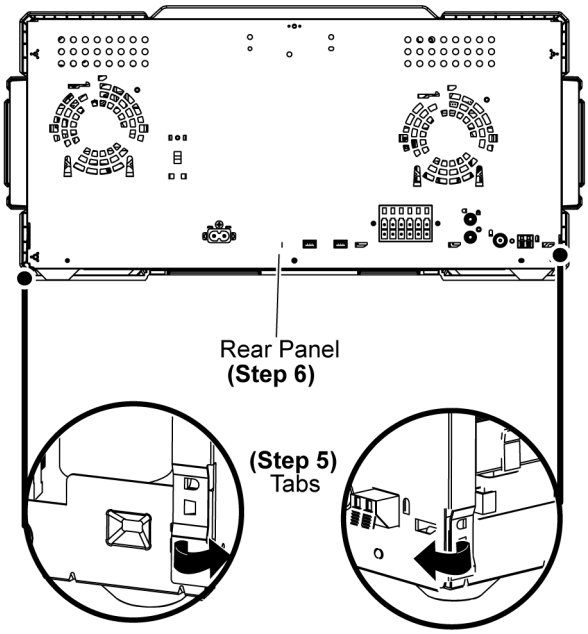

10.18. Disassembly of CD Mechanism Unit

- **Refer to "Disassembly of Top Cabinet".**
- **Refer to "Disassembly of Front Panel Unit".**

Step 1 Remove 2 screws.

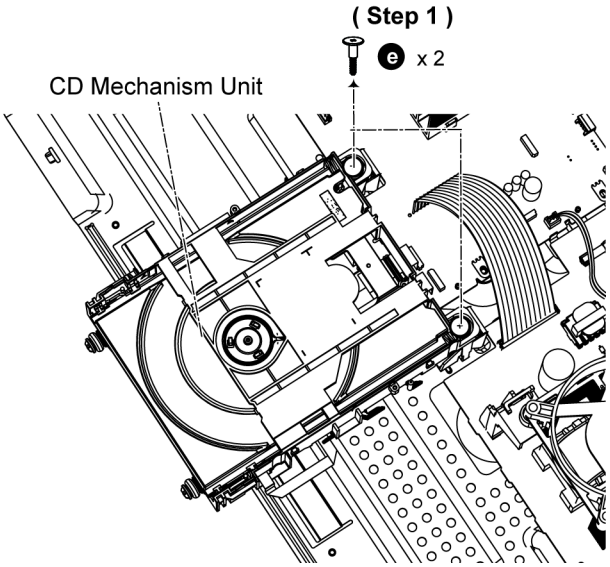

Step 2 Detach 10P FFC at the connector (FP8252) on the Main P.C.B..
Step 3 Detach 24P FFC at the connector (FP8202) on the Main P.C.B..

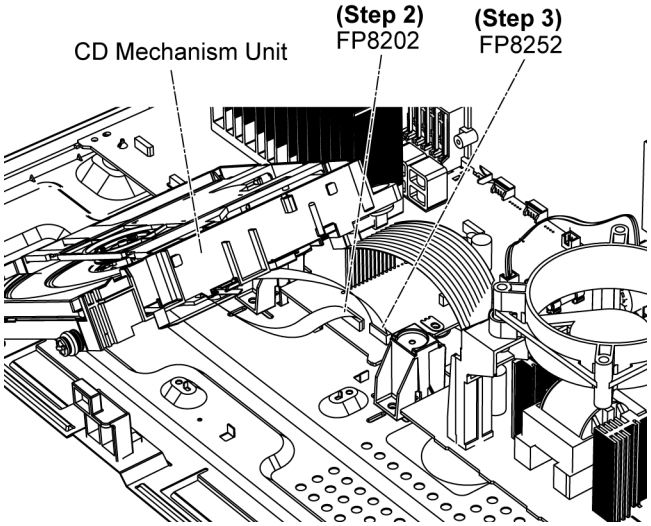

10.19. Disassembly of Main P.C.B.

- **Refer to "Disassembly of Top Cabinet".**
- **Refer to "Disassembly of Front Panel Unit".**
- **Refer to "Disassembly of Rear Panel".**
- **Refer to "Disassembly of CD Mechanism Unit".**

Step 1 Detach 2P Wire at the connector (CN2007) on the Main P.C.B..
Step 2 Detach 2P Wire at the connector (CN2009) on the Main P.C.B..
Step 3 Detach 2P Wire at the connector (CN2006) on the Main P.C.B..
Step 4 Detach 13P Cable at the connector (CN5802) on the SMPS P.C.B..

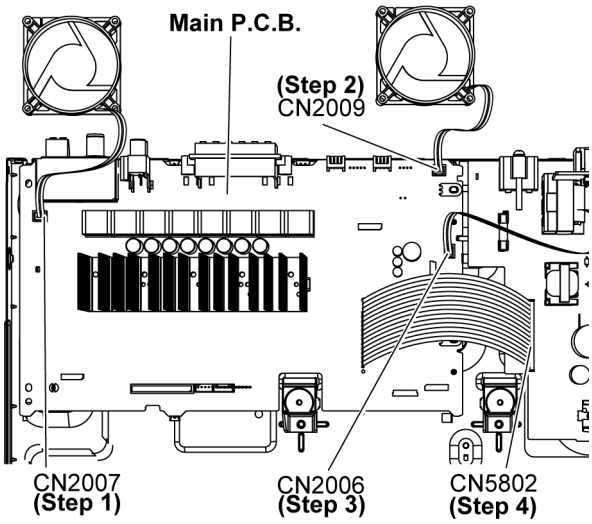

Step 5 Remove 2 screws.
Step 6 Lift up to remove the Main P.C.B..
Caution: During assembling, ensure that the Main P.C.B. is properly located & fully seated onto the Inner Chassis Unit.

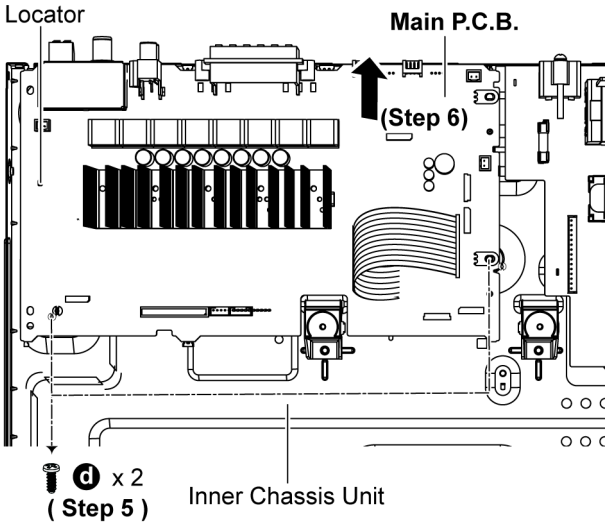

10.20. Disassembly of Digital Amplifier IC (IC2501/IC2502/IC2503/IC2504)

- **Refer to "Disassembly of Main P.C.B.".**

10.20.1. Disassembly of Digital Amplifier IC (IC2501/IC2502/IC2503/IC2504)

Caution: Handle the Main P.C.B. with caution due to it's high temperature after prolonged use. Touching it may lead to injuries.

Step 1 Place the Main P.C.B. on an insulated material.

Step 2 Remove 5 screws.

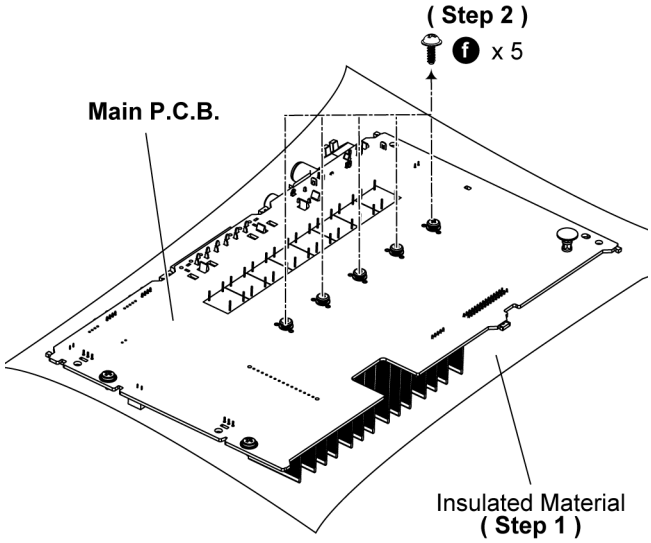

Step 3 Lift up the Main P.C.B. as arrow shown.

Caution: Keep the Heatsink Spacers in safe place. Avoid denting it, place it back during assembling.

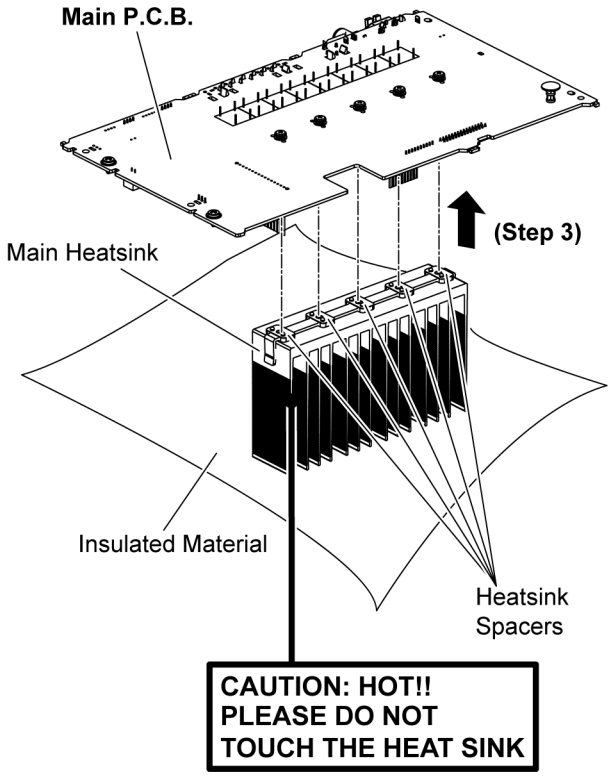

Step 4 Desolder the pins of the Digital Amplifier IC.

Step 5 Remove the Digital Amplifier IC.

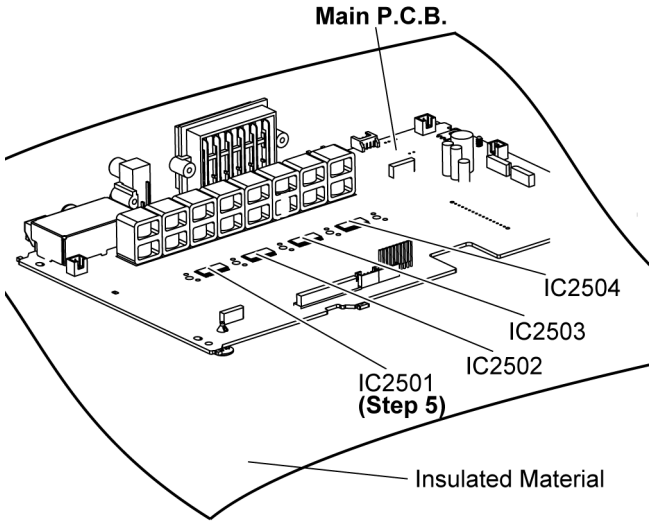

10.20.2. Assembly of Digital Amplifier IC (IC2501/IC2502/IC2503/IC2504)

Step 1 Fix the Digital Amplifier IC onto the Main P.C.B..

Step 2 Solder the pins of the Digital Amplifier IC.

Cautions: Ensure that the pins of the Digital Amplifier IC is positioned correctly on the Main P.C.B. before soldering.

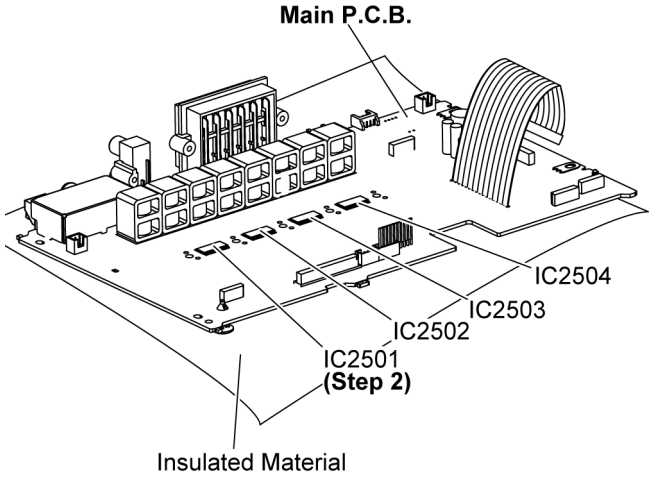

Step 3 Fix Heatsink spacers onto Main Heatsink..

Caotion: Ensure that the Heatsink Spacers are properly located and seated flatly onto Main Heatsink.

Step 4 Apply grease to the Main Heatsink as indicate in the diagram..

Caution: Ensure Grease thickness is about 0.2mm.

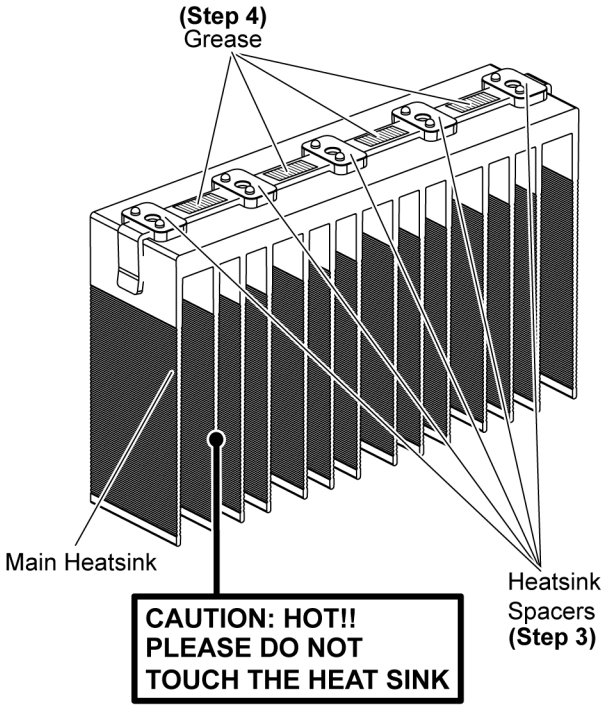

Step 5 Upset the Main P.C.B..

Step 6 Fix 5 screws.

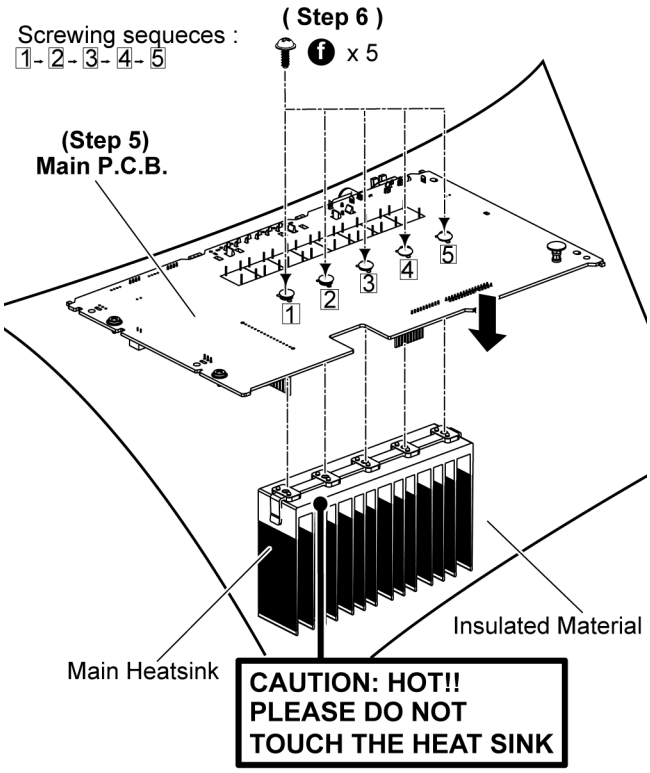

10.21. Disassembly of SMPS P.C.B. and Voltage Selector P.C.B.

- **Refer to "Disassembly of Top Cabinet".**

Step 1 Remove 2 screws.

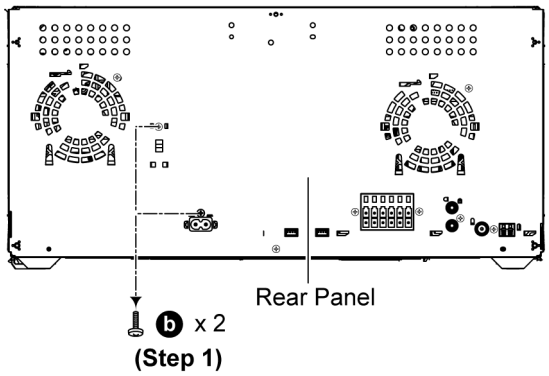

Step 2 Detach 13P Cable at a connector (CN5802) on the SMPS P.C.B..

Step 3 Detach 2P Wire at a connector (CN2006) on the Main P.C.B..

Step 4 Remove 1 screw.

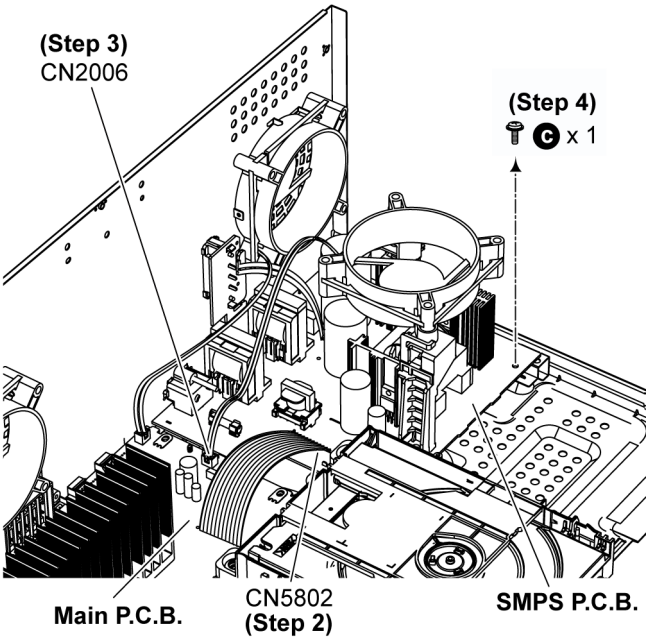

Step 5 Detach the Voltage Selector P.C.B. from the rear panel as arrow shown.

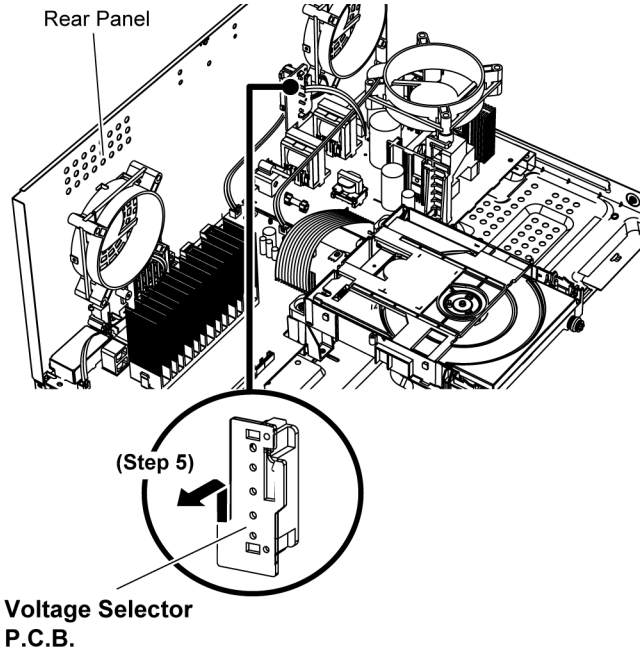

Step 6 Remove 2 screws

Step 7 Remove the Inner Fan Unit.

Caution: Keep the Fan Fixtures in safe place, place it back during assembling.

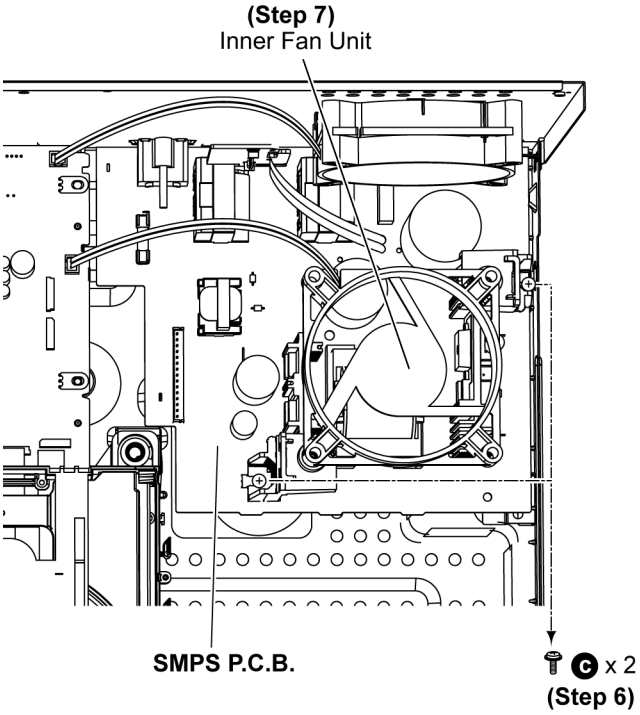

Step 8 Remove the SMPS P.C.B..

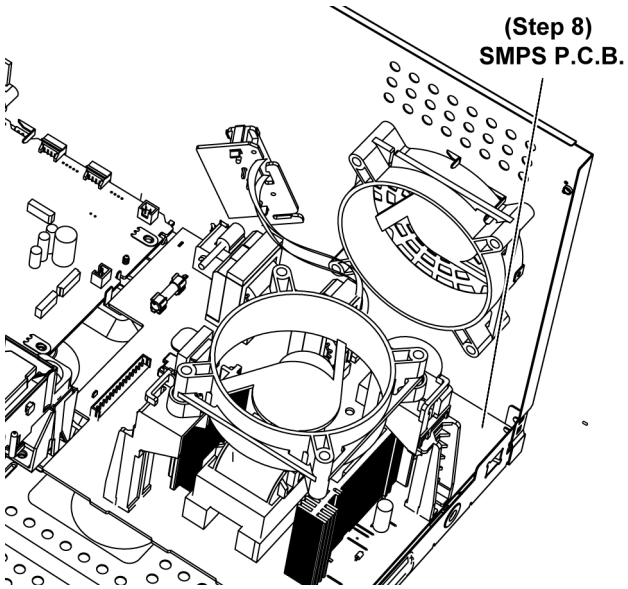

Caution: During assembling, ensure that the SMPS P.C.B. is properly located & fully seated onto the Inner Chassis Unit.

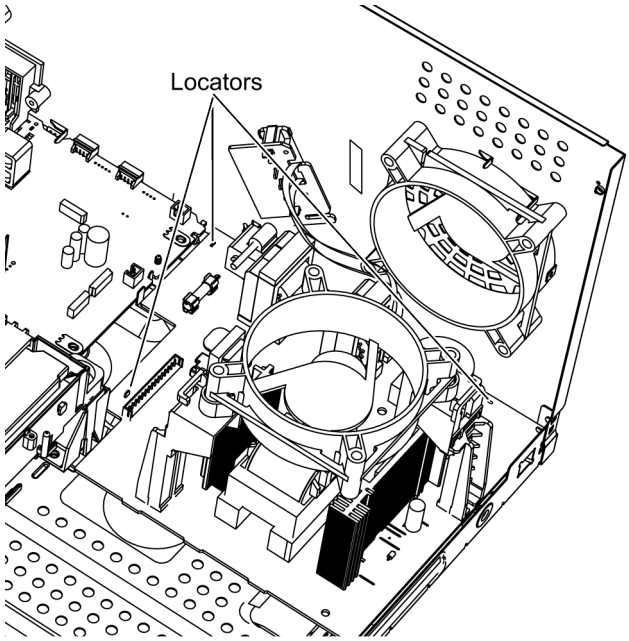

10.22. Replacement of Switching Regulator (Q5700)

- **Refer to "Disassembly of SMPS P.C.B.".**

10.22.1. Disassembly of Switching Regulator (Q5700)

Step 1 Desolder pins of the Switching Regulator (Q5700) on the solder side of the SMPS P.C.B.

Step 2 Desolder pins of the Heatsink A.

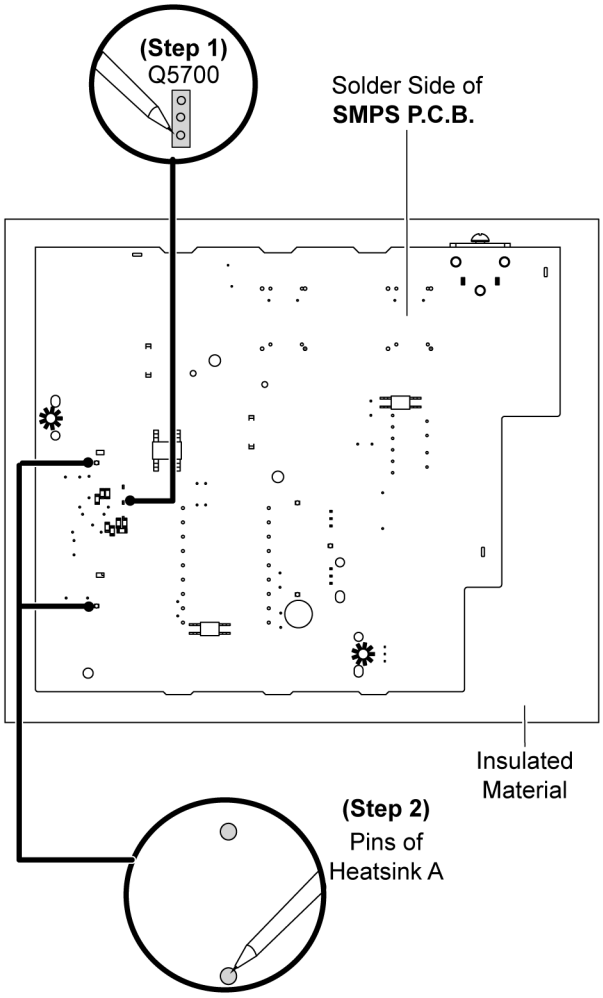

Step 3 Remove the Heatsink A with the Switching Regulator (Q5700).

Step 4 Remove 1 screw.

Step 5 Remove the Switching Regulator (Q5700) from the Heatsink A.

Caution: Avoid touching the Heatsink A due to its high temperature after prolong use. Touching it may lead to injuries.

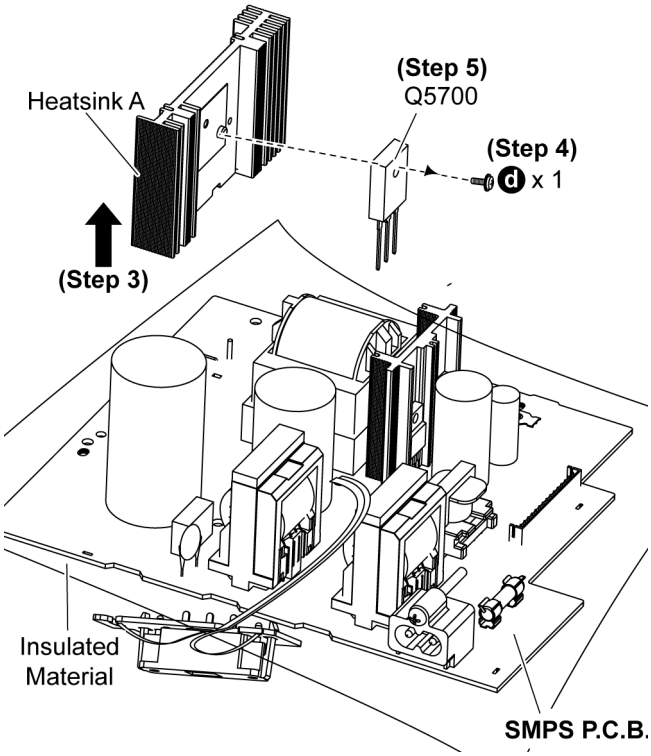

10.22.2. Assembly of Switching Regulator (Q5700)

Step 1 Apply grease to the Heatsink A.

Step 2 Screw the Switching Regulator (Q5700) to the Heatsink A.

Caution: Ensure the Switching Regulator (Q5700) is tightly screwed to the Heatsink A.

Step 3 Fix the Heatsink A with the Switching Regulator (Q5700) on the SMPS P.C.B. as shown.

Caution 1: Ensure the Heatsink A with the Switching Regulator (Q5700) are properly inserted into the SMPS P.C.B..

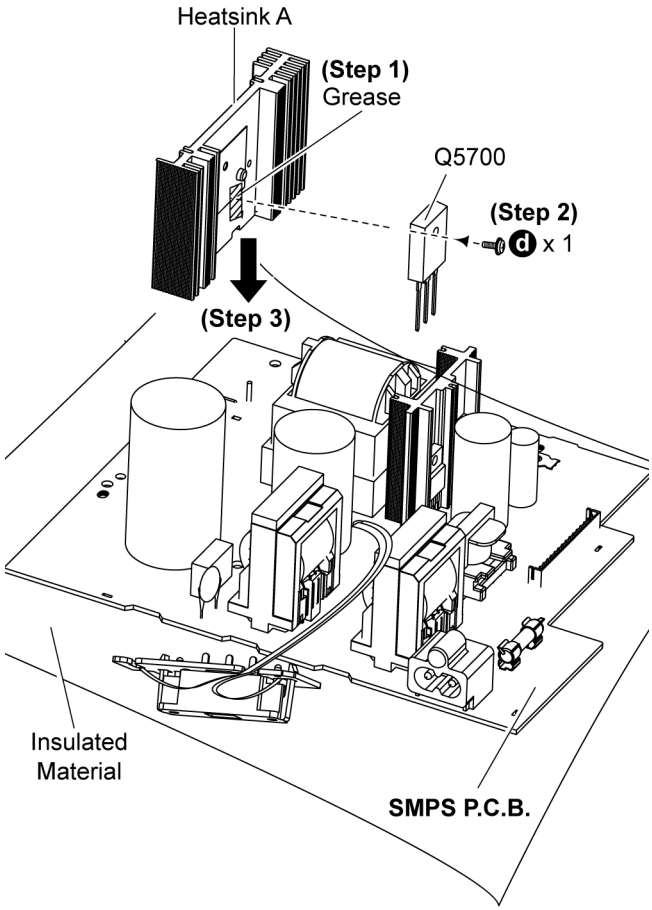

Step 4 Solder pins of the Switching Regulator (Q5700) on the solder side of the SMPS P.C.B..

Step 5 Solder pins of the Heatsink A on the solder side of the SMPS P.C.B..

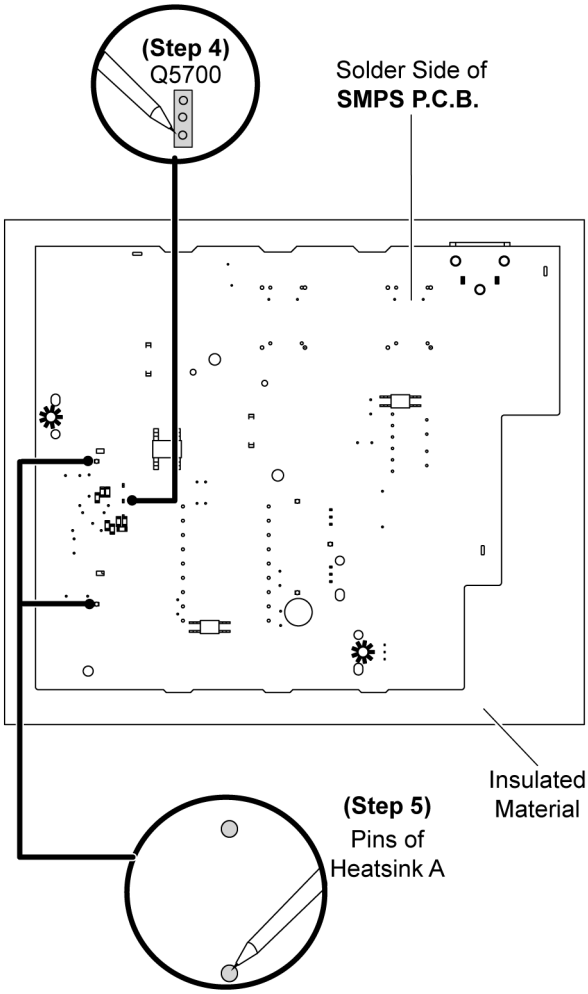

10.23. Replacement of Rectifier Diode (D5801)

- **Refer to "Disassembly of SMPS P.C.B.".**

10.23.1. Disassembly of Rectifier Diode (D5801)

Step 1 Desolder pins of the Rectifier Diode (D5801) and (D5802) on the solder side of the SMPS P.C.B..
Step 2 Desolder pins of the Heatsink B.

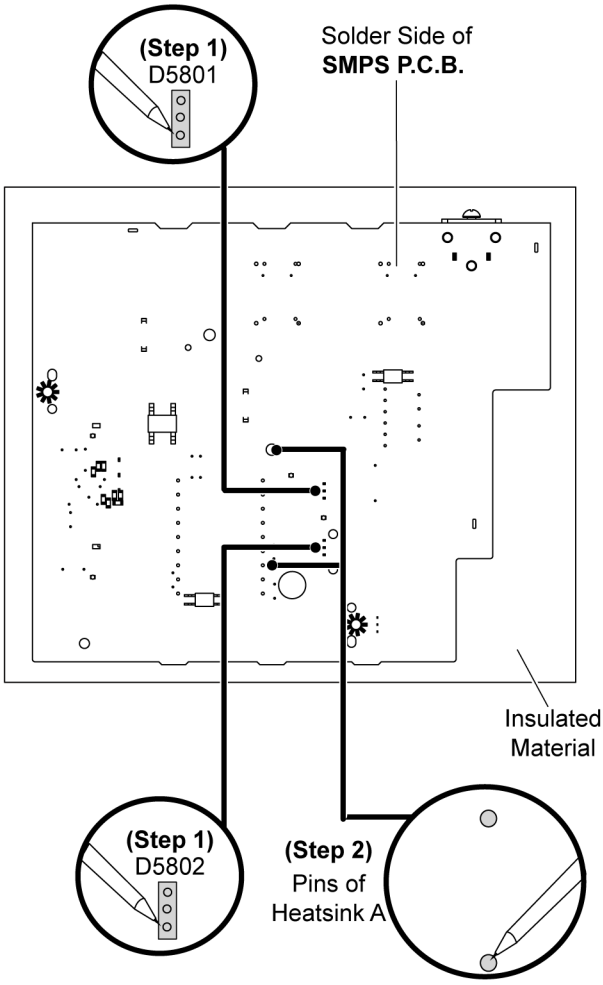

Step 3 Remove 1 screw at Rectifier Diode (D5801).
Step 4 Remove the Rectifier Diode (D5801) from the SMPS P.C.B..
Caution: Avoid touching the Heatsink B due to its high temperature after prolonged use. Touching it may lead to injuries.

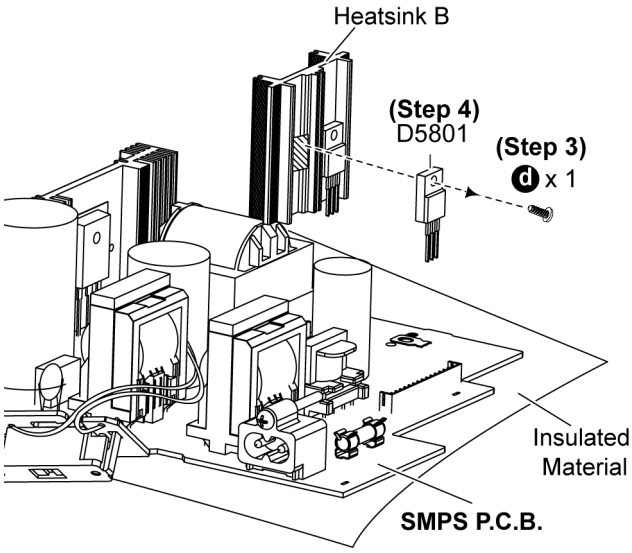

10.23.2. Assembly of Rectifier Diode (D5801)

Step 1 Apply grease to the Heatsink B.
Step 2 Screw the Rectifier Diode (D5801) to the Heatsink B.
Caution: Ensure the Rectifier Diode (D5801) is tightly screwed to the Heatsink B.
Step 3 Fix the Heatsink B with Rectifier Diode (D5801) on the SMPS P.C.B..
Caution: Ensure pins of the Rectifier Diode (D5801) are properly inserted into the SMPS P.C.B..

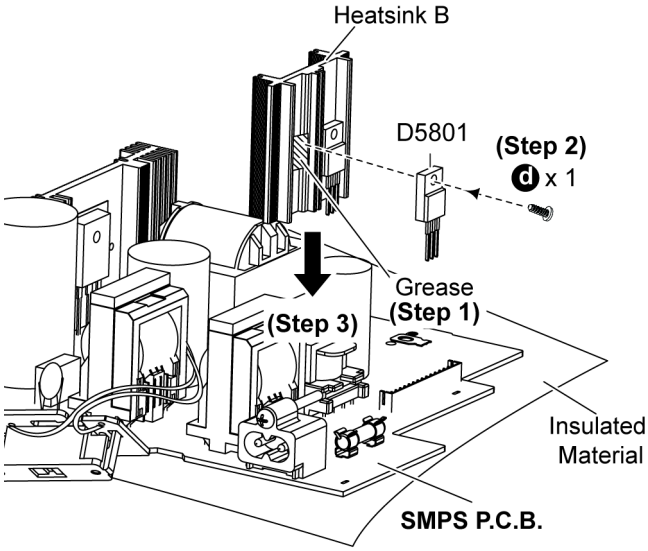

Step 4 Solder pins of the Rectifier Diode (D5801) on the solder side of the SMPS P.C.B..
Step 5 Solder pins of the Heatsink B.

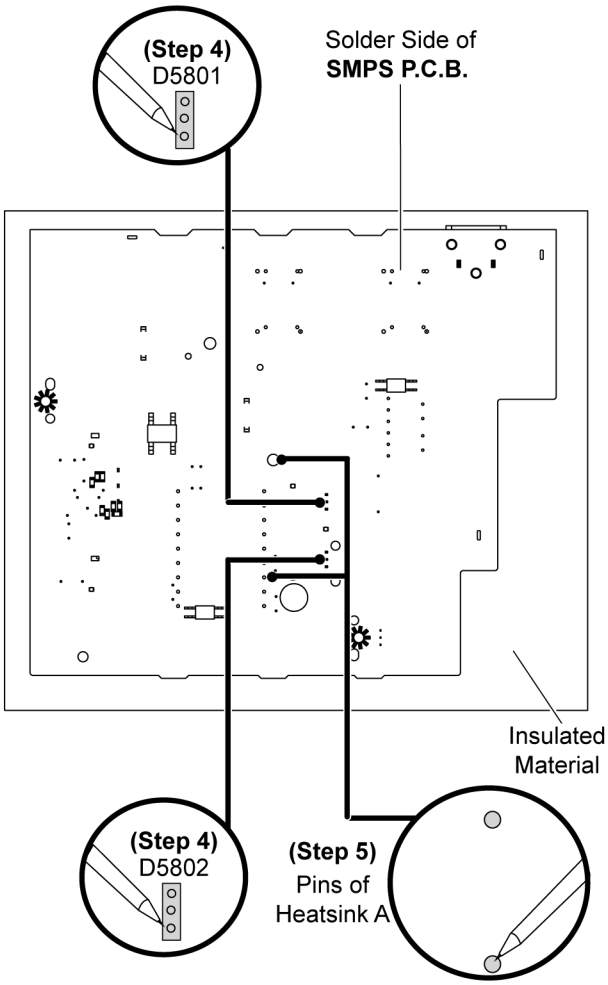

10.24. Replacement of Rectifier Diode (D5802)

- **Refer to "Disassembly of SMPS P.C.B.".**

10.24.1. Disassembly of Rectifier Diode (D5802)

Step 1 Desolder pins of the Rectifier Diode (D5802) on the solder side of the SMPS P.C.B.

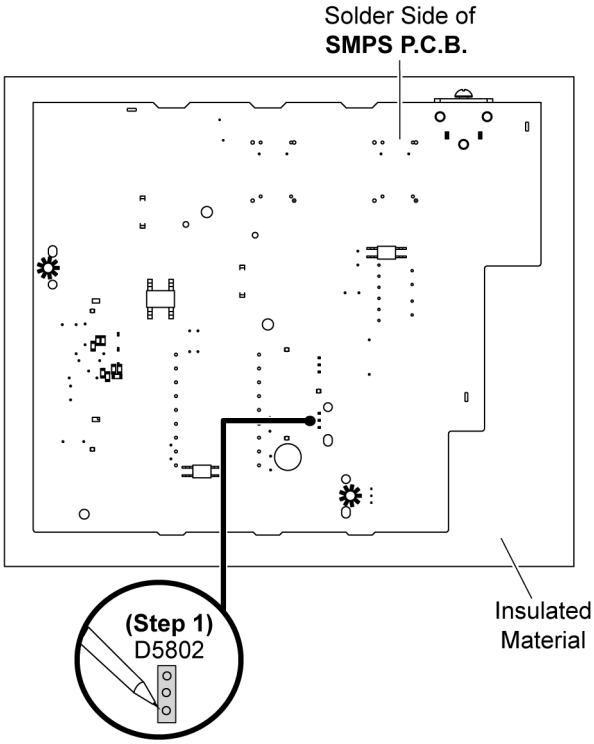

Step 2 Remove 1 screw at Rectifier Diode (D5802).

Step 3 Remove the Rectifier Diode (D5802) from the SMPS P.C.B..

Caution: Avoid touching the Heatsink B due to its high temperature after prolong use. Touching it may lead to injuries.

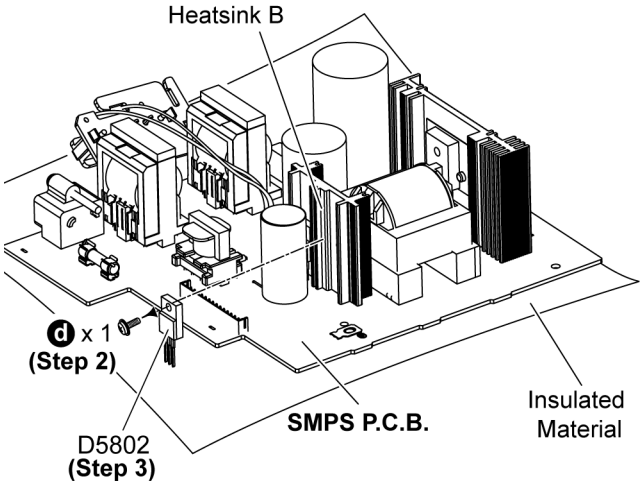

10.24.2. Assembly of Rectifier Diode (D5802)

Step 1 Apply grease to the Heatsink B.

Step 2 Screw the Rectifier Diode (D5802) to the Heatsink B.

Caution: Ensure the Rectifier Diode (D5802) is tightly screwed to the Heatsink B.

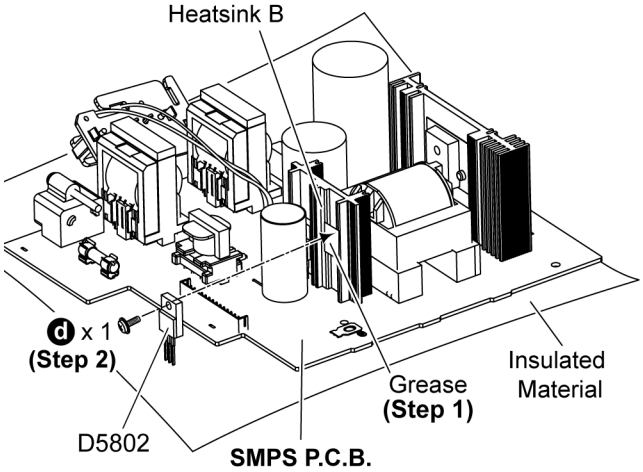

Step 4 Solder pins of the Rectifier Diode (D5802) on the solder side of SMPS P.C.B..

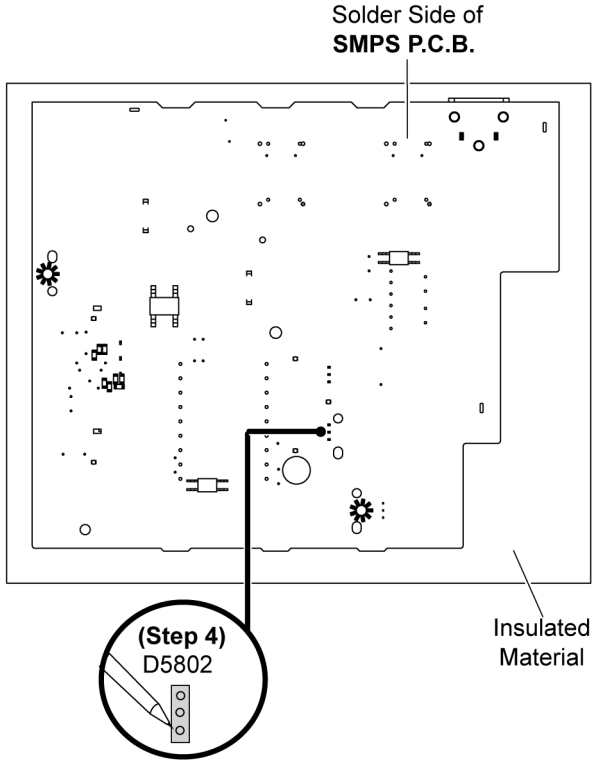

10.25. Disassembly of CD Interface P.C.B.

- **Refer to “Disassembly of Top Cabinet”.**
- **Refer to “Disassembly of Front Panel Unit”.**
- **Refer to “Disassembly of CD Mechanism Unit”.**

Step 1 Remove 3 screws.
Step 2 Desolder pins of the motor (M7301).
Step 3 Desolder pins of the motor (M7302).
Step 4 Remove the CD Interface P.C.B..

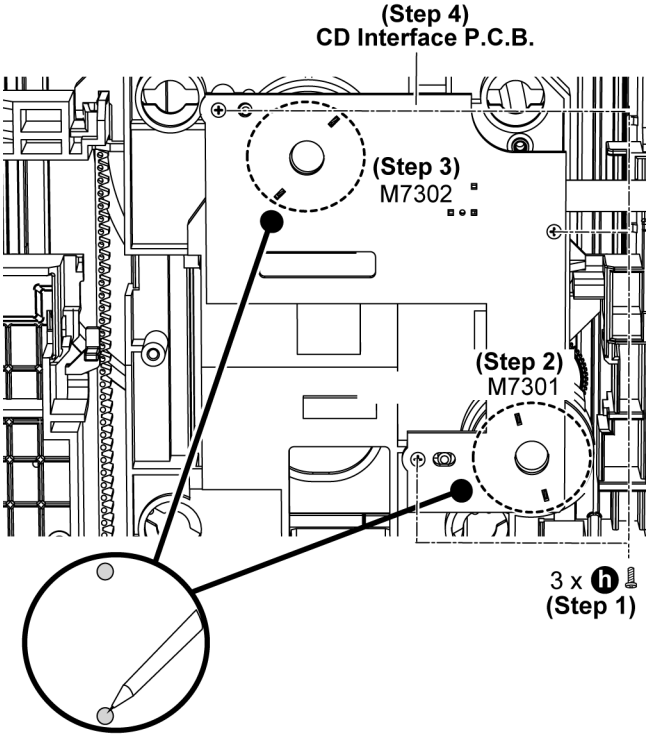

11 Service Position

Note: For description of the disassembly procedures, see the Section 10.

11.1. Checking of FL Display P.C.B., Control P.C.B., Volume P.C.B., Mic P.C.B. and USB P.C.B.

Step 1 Remove Top Cabinet.
Step 2 Remove Front Panel Unit.
Step 3 Remove FL Display P.C.B..
Step 4 Remove Illumination Button P.C.B..
Step 5 Remove Control P.C.B..
Step 6 Remove Volume P.C.B..
Step 7 Remove USB P.C.B..
Step 8 Remove Mic P.C.B..
Step 9 Attach 10P FFC at a connector (CN2002) on the Main P.C.B..
Step 10 Attach 11P Cable at a connector (CN2001) on the Main P.C.B..
Step 11 Attach 30P FFC at a connector (CN2004) on the Main P.C.B..

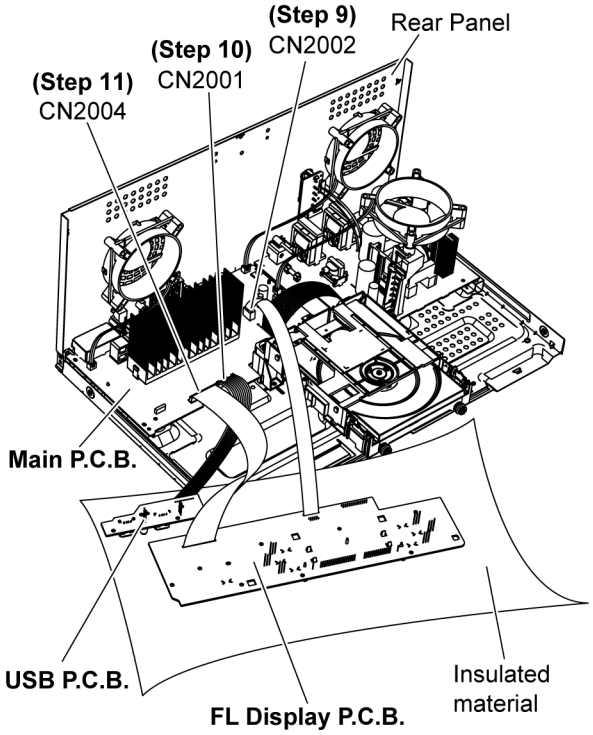

Step 12 Attach 2P Cable at a connector (CN6800) on the Illumination Button P.C.B..
Step 13 Attach 8P Cable at a connector (CN6103) on the Mic P.C.B..
Step 14 Attach 12P Cable at a connector (CN6200) on the Control P.C.B..
Step 15 Attach 30P FFC at a connector (CN6002) on the FL Display P.C.B..
Step 16 Attach 5P Wire at the connector (FP3001) on Main P.C.B..
Step 17 FL Display P.C.B., Control P.C.B., Volume P.C.B., Mic P.C.B. and USB P.C.B. can be checked as diagram shown.

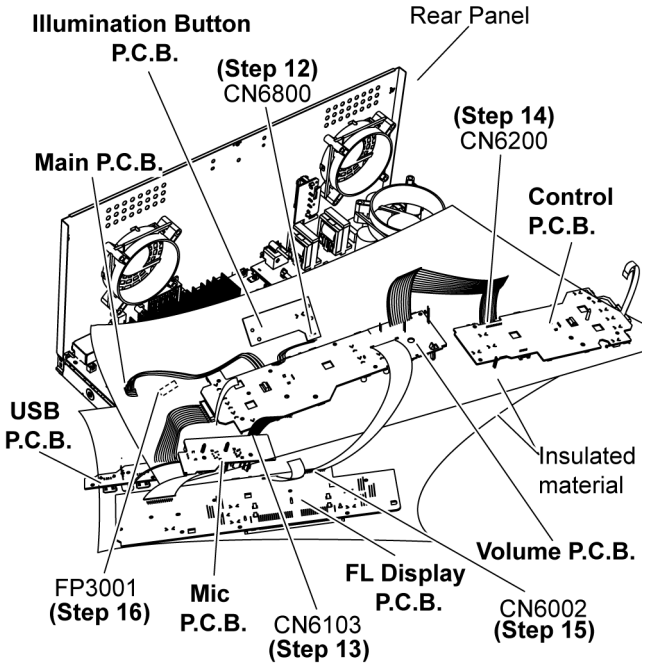

11.2. Checking of Main P.C.B. (Side B)

Step 1 Remove Top Cabinet.
Step 2 Remove Front Panel Unit.
Step 3 Remove Rear Panel.
Step 4 Remove CD Mechanism Unit.
Step 5 Remove Main P.C.B..
Step 6 Attach 24P FFC at the connector (FP8202) on the Main P.C.B..
Step 7 Attach 10P FFC at the connector (FP8252) on the Main P.C.B..
Step 8 Attach 13P Cable at the connector (CN5802) on the SMPS P.C.B..
Step 9 Attach 2P Wire at the connector (CN2006) on the Main P.C.B...
Step 10 Attach 2P Wire at the connector (CN2009) on the Main P.C.B..
Step 11 Attach 2P Wire at the connector (CN2007) on the Main P.C.B..

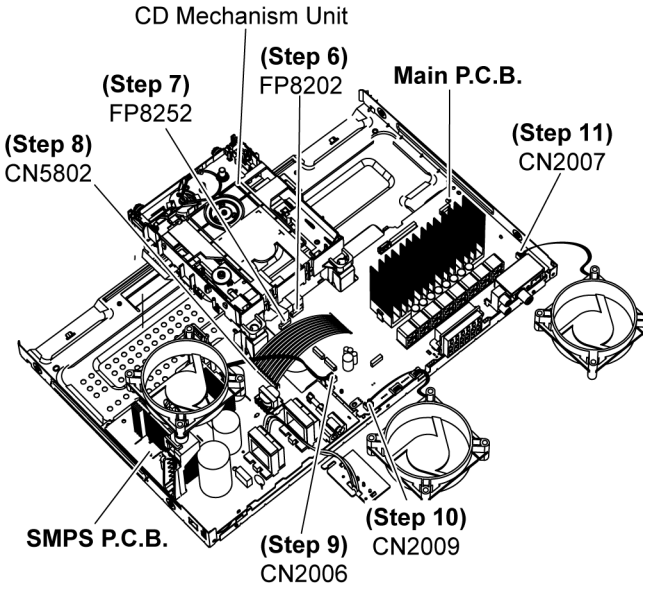

Step 12 Attach 10P FFC at a connector (CN2002) on the Main P.C.B..
Step 13 Attach 11P Cable at a connector (CN2001) on the Main P.C.B..
Step 14 Attach 30P FFC at a connector (CN2004) on the Main P.C.B..
Step 15 Attach 5P Wire at the connector (FP3001) on Main P.C.B..
Step 16 Side B Main P.C.B. can be checked as diagram shown.

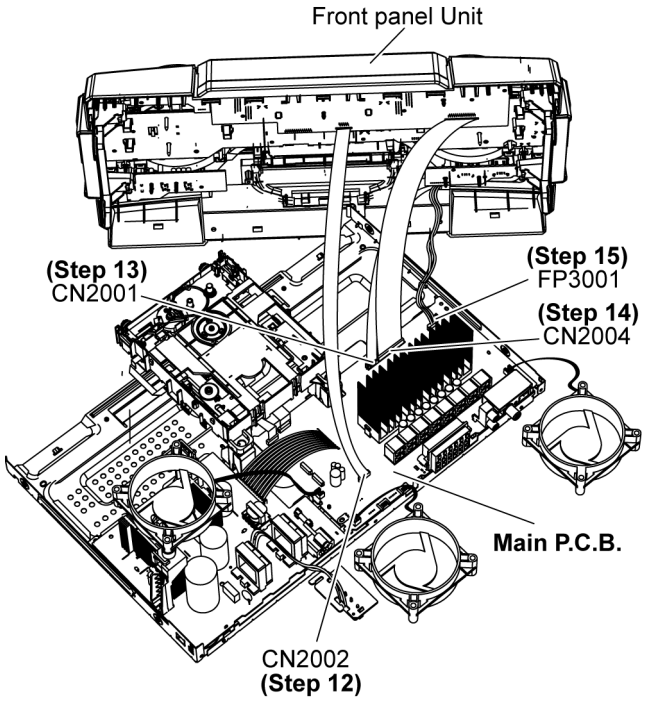

11.3. Checking of Main P.C.B. (Side A)

Step 1 Remove Top Cabinet.
Step 2 Remove Front Panel Unit.
Step 3 Remove Rear Panel.
Step 4 Remove CD Mechanism Unit.
Step 5 Remove Main P.C.B..
Step 6 Attach 24P FFC at the connector (FP8202) on the Main P.C.B..
Step 7 Attach 10P FFC at the connector (FP8252) on the Main P.C.B..
Step 8 Attach 13P Cable at the connector (CN5802) on the SMPS P.C.B..
Step 9 Attach 2P Wire at the connector (CN2006) on the Main P.C.B...
Step 10 Attach 2P Wire at the connector (CN2009) on the Main P.C.B..
Step 11 Attach 2P Wire at the connector (CN2007) on the Main P.C.B..

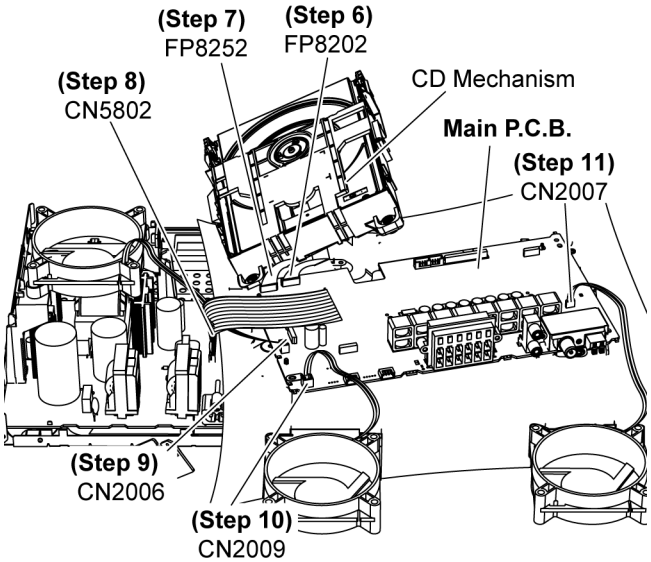

Step 12 Upset the Main P.C.B..

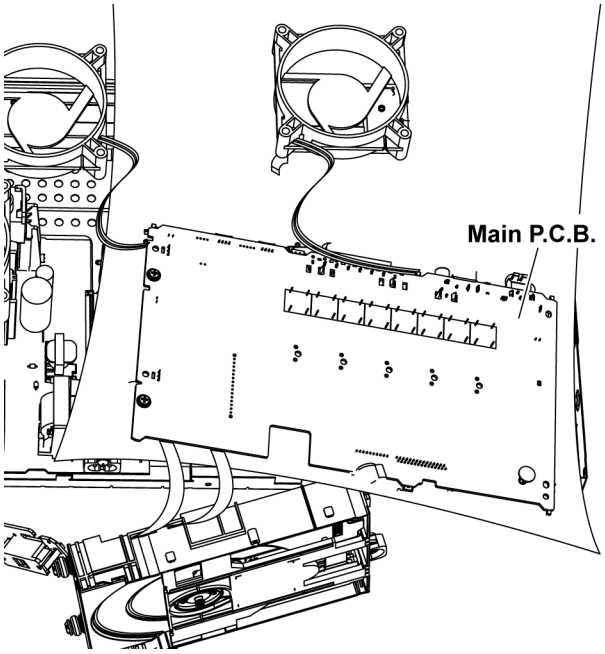

Step 13 Attach 10P FFC at a connector (CN2002) on the Main P.C.B..
Step 14 Attach 11P Cable at a connector (CN2001) on the Main P.C.B..
Step 15 Attach 30P FFC at a connector (CN2004) on the Main P.C.B..
Step 16 Attach 5P Wire at the connector (FP3001) on Main P.C.B..
Step 17 Side A Main P.C.B. can be checked as diagram shown.

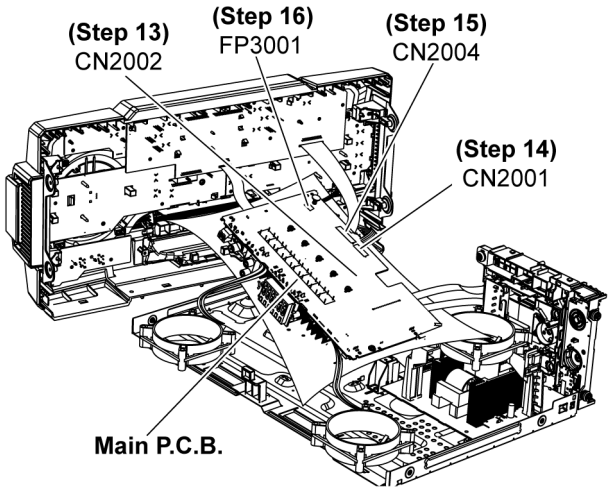

11.4. Checking of SMPS P.C.B.

Step 1 Remove Top Cabinet.
Step 2 Remove SMPS P.C.B..
Step 3 Attach 13P Cable at the connector (CN5802) on the SMPS P.C.B..

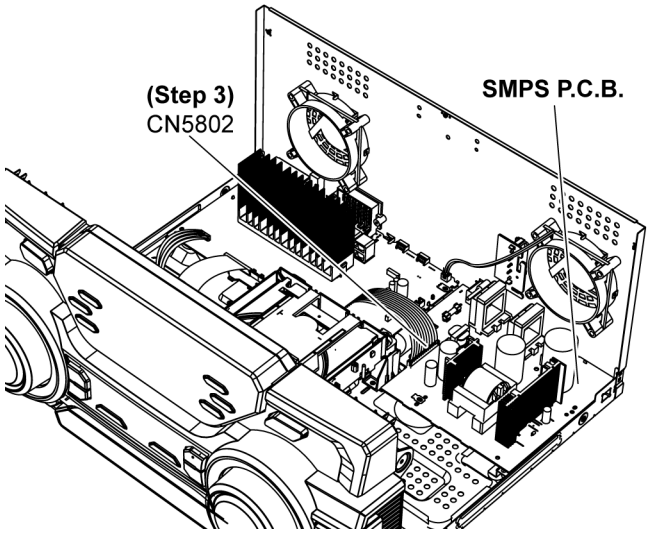

Step 4 Flip the SMPS P.C.B..
Step 5 Attach 2P Wire at the connector (CN2006) on the Main P.C.B..
Step 6 SMPS P.C.B. can be checked as diagram shown.

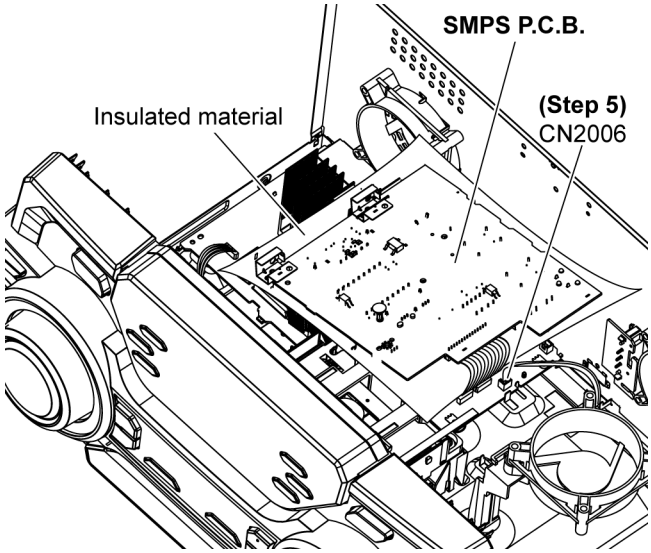

12 Block Diagram

12.1. Servo & System Control

: CD AUDIO INPUT SIGNAL LINE : AUDIO OUTPUT SIGNAL LINE : USB SIGNAL LINE

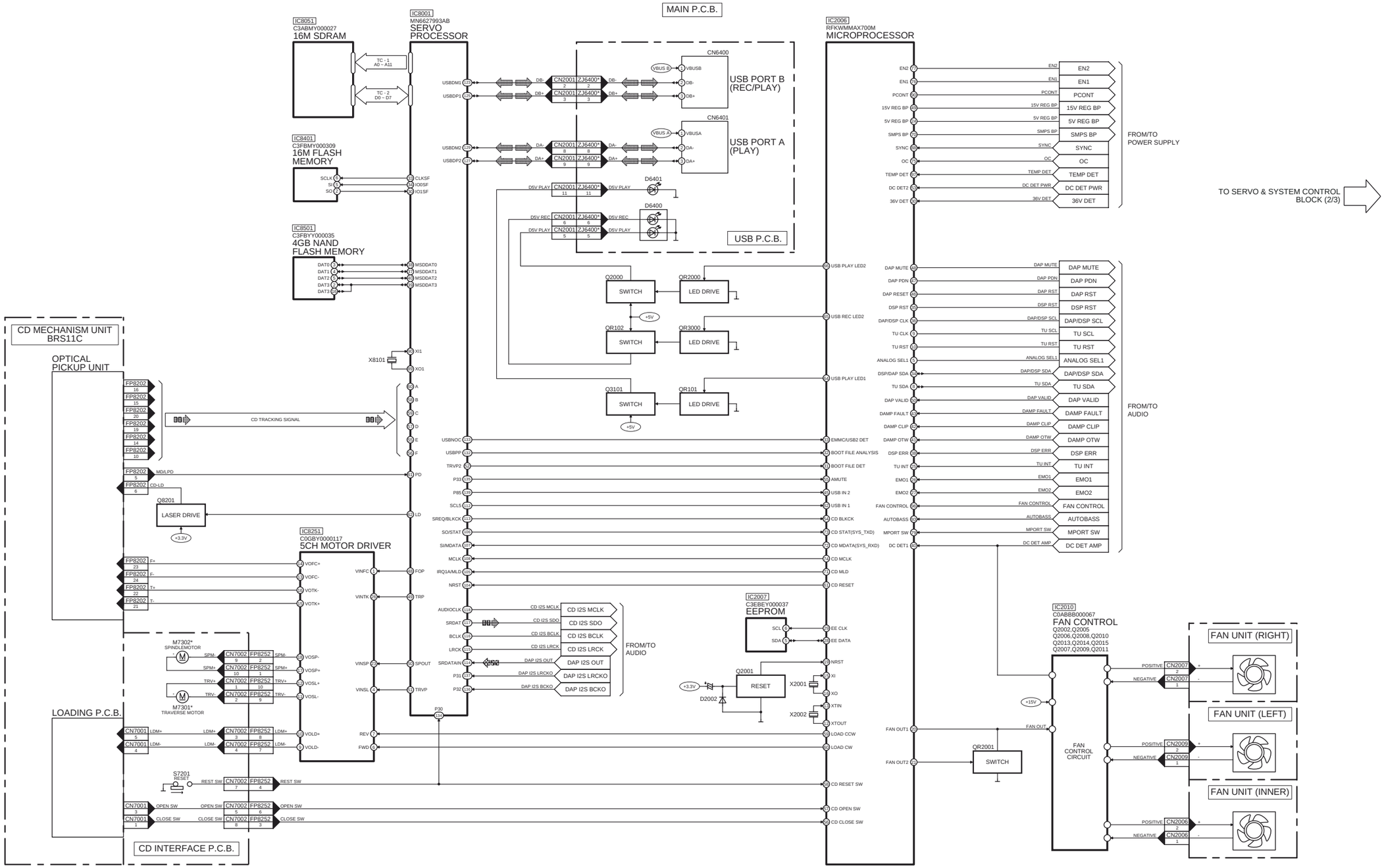

NOTE: " * " REF IS FOR INDICATION ONLY

SA-MAX700GS SERVO & SYSTEM CONTROL (1/3) BLOCK DIAGRAM

: CD AUDIO INPUT SIGNAL LINE : AUDIO OUTPUT SIGNAL LINE : USB SIGNAL LINE

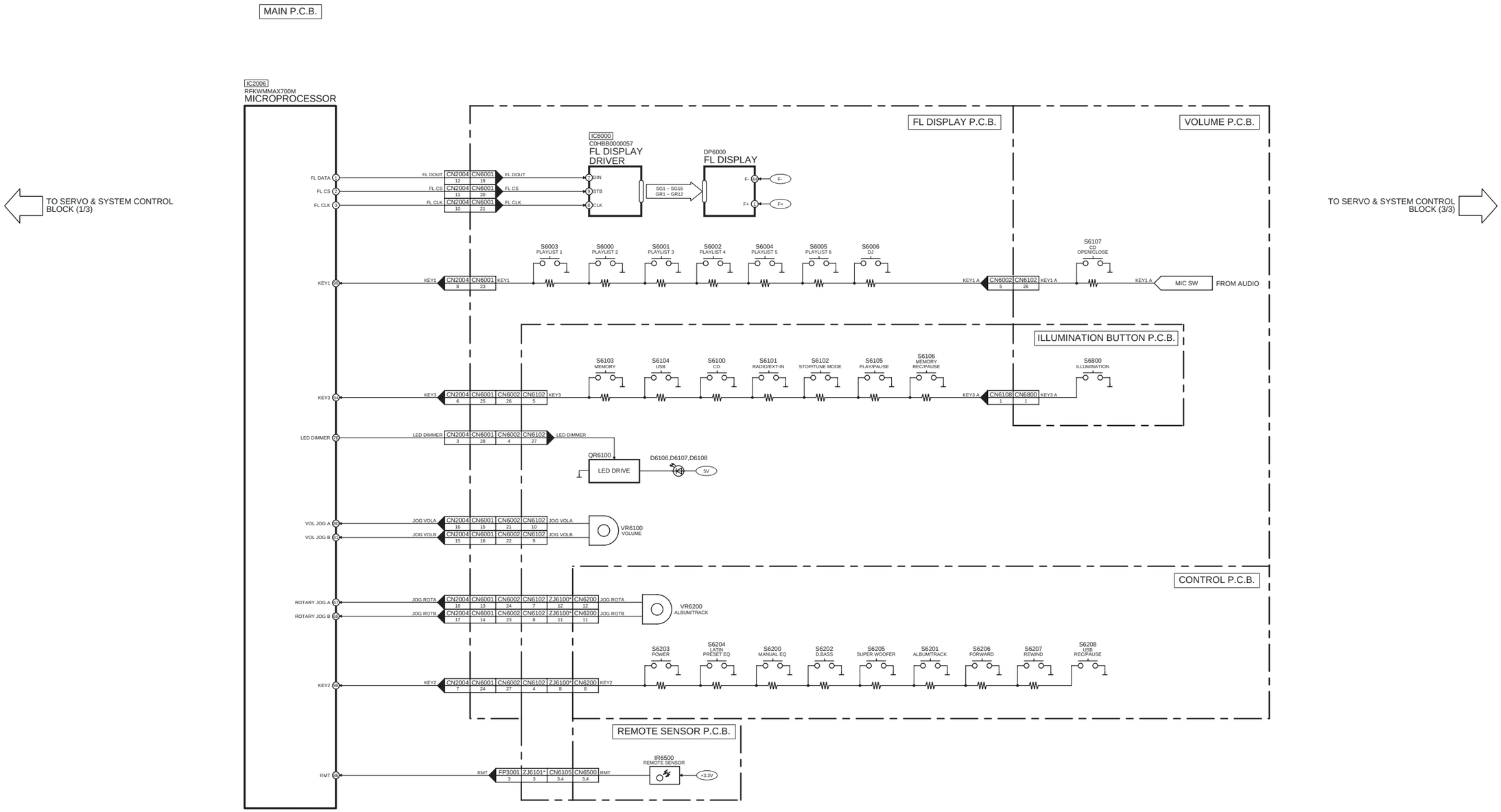

NOTE: " * " REF IS FOR INDICATION ONLY

SA-MAX700GS SERVO & SYSTEM CONTROL (2/3) BLOCK DIAGRAM

: CD AUDIO INPUT SIGNAL LINE : AUDIO OUTPUT SIGNAL LINE : USB SIGNAL LINE

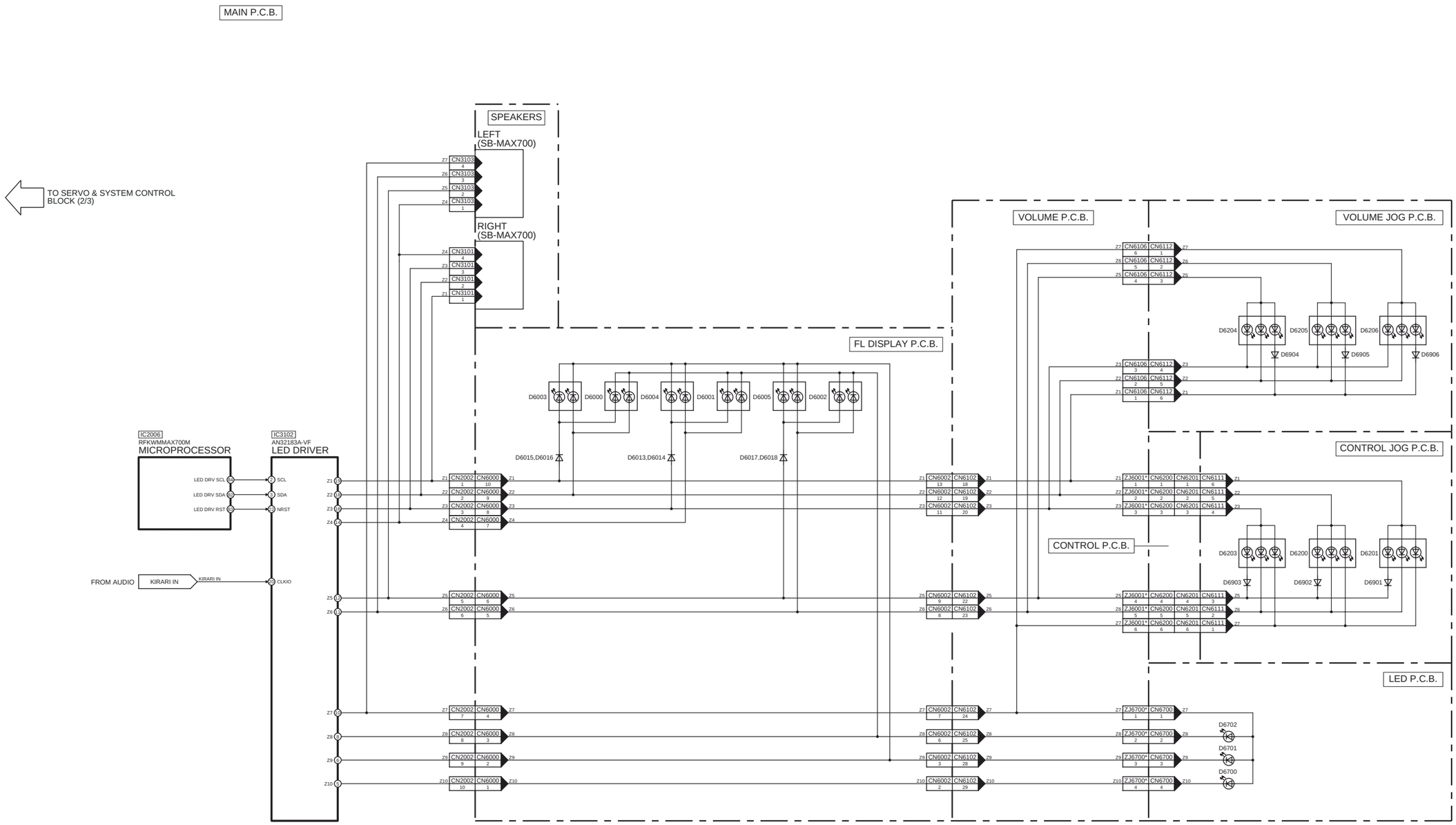

NOTE: “ * ” REF IS FOR INDICATION ONLY

SA-MAX700GS SERVO & SYSTEM CONTROL (3/3) BLOCK DIAGRAM

12.2. IC Terminal Chart

TC	IC8051 16M SDRAM		SIGNAL NAME	IC8001 SERVO PROCESSOR	
	PORT NAME	PIN NO		PIN NO	PORT NAME
1	A0	21	A0	14	A0
	A1	22	A1	15	A1
	A2	23	A2	16	A2
	A3	24	A3	17	A3
	A4	27	A4	20	A4
	A5	28	A5	21	A5
	A6	29	A6	22	A6
	A7	30	A7	23	A7
	A8	31	A8	24	A8
	A9	32	A9	25	A9
	A10	20	A10	13	A10
	BA0	19	A11	26	A11

TC	IC8051 16M SDRAM		SIGNAL NAME	IC8001 SERVO PROCESSOR	
	PORT NAME	PIN NO		PIN NO	PORT NAME
2	DQ0 / DQ15	2 / 49	D0	142	D0
	DQ1 / DQ14	3 / 48	D1	143	D1
	DQ2 / DQ13	5 / 46	D2	144	D2
	DQ3 / DQ12	6 / 45	D3	2	D3
	DQ4 / DQ11	8 / 43	D4	3	D4
	DQ5 / DQ10	9 / 42	D5	4	D5
	DQ6 / DQ9	11 / 40	D6	5	D6
	DQ7 / DQ8	12 / 39	D7	6	D7

12.3. Audio

: CD AUDIO INPUT SIGNAL LINE : TUNER/MUSIC PORT/AUX/MIC AUDIO INPUT SIGNAL LINE : AUDIO OUTPUT SIGNAL LINE : AM SIGNAL LINE : FM SIGNAL LINE

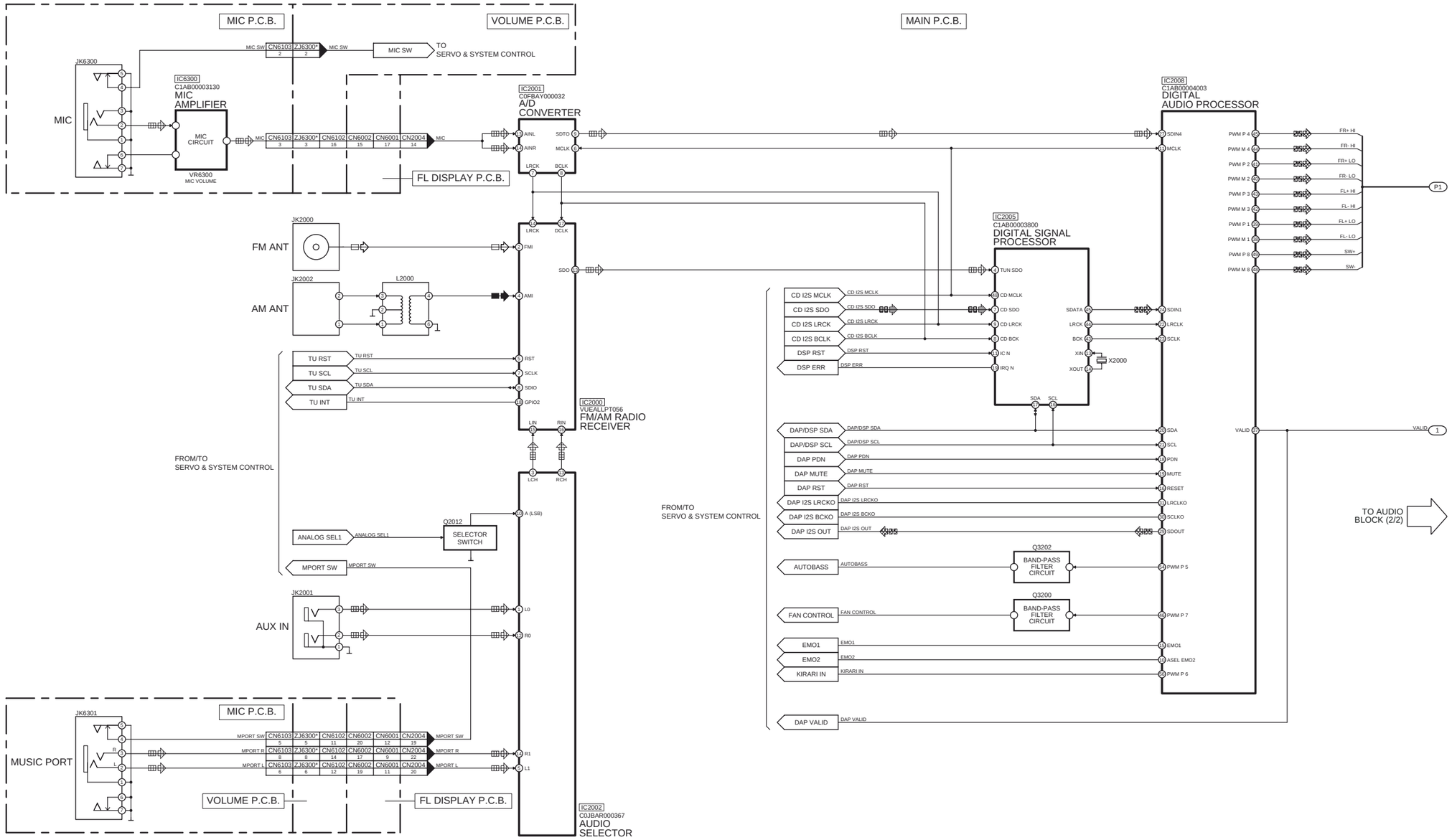

NOTE: " * " REF IS FOR INDICATION ONLY

SA-MAX700GS AUDIO (1/2) BLOCK DIAGRAM

: CD AUDIO INPUT SIGNAL LINE : TUNER/MUSIC PORT/AUX/MIC AUDIO INPUT SIGNAL LINE : AUDIO OUTPUT SIGNAL LINE : AM SIGNAL LINE : FM SIGNAL LINE

MAIN P.C.B.

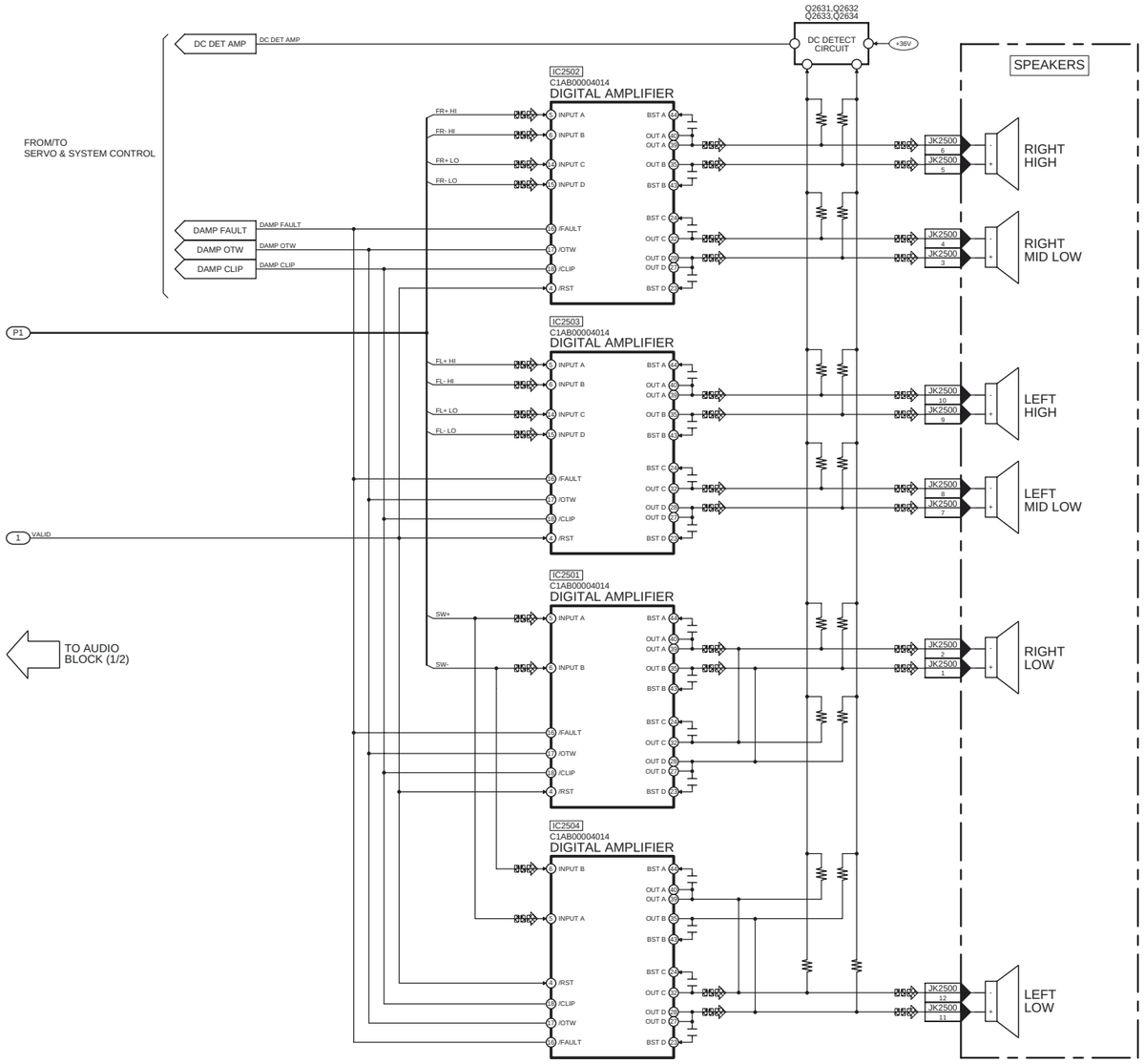

SA-MAX700GS AUDIO (2/2) BLOCK DIAGRAM

12.4. Power Supply

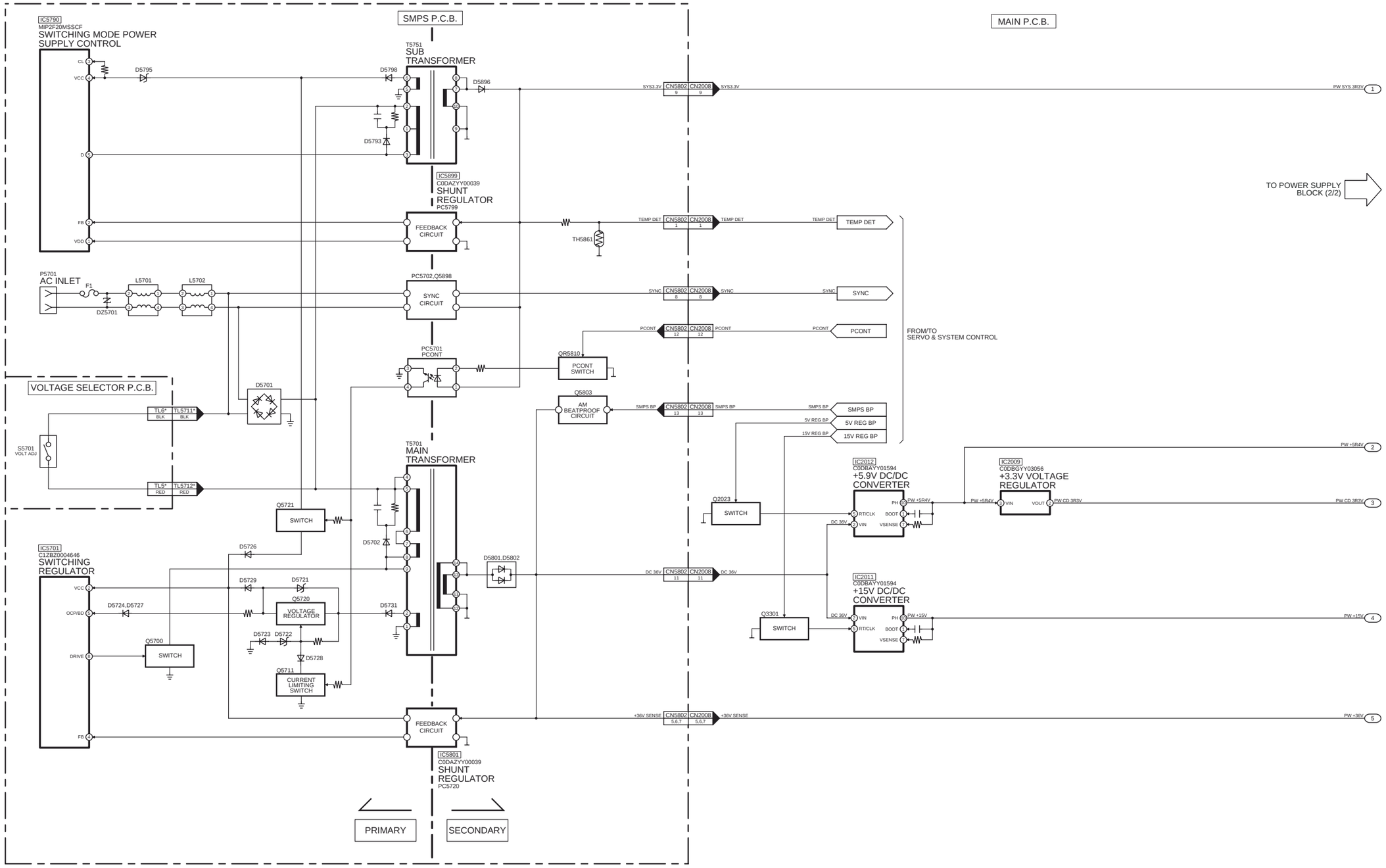

NOTE: “ * ” REF IS FOR INDICATION ONLY

SA-MAX700GS POWER SUPPLY (1/2) BLOCK DIAGRAM

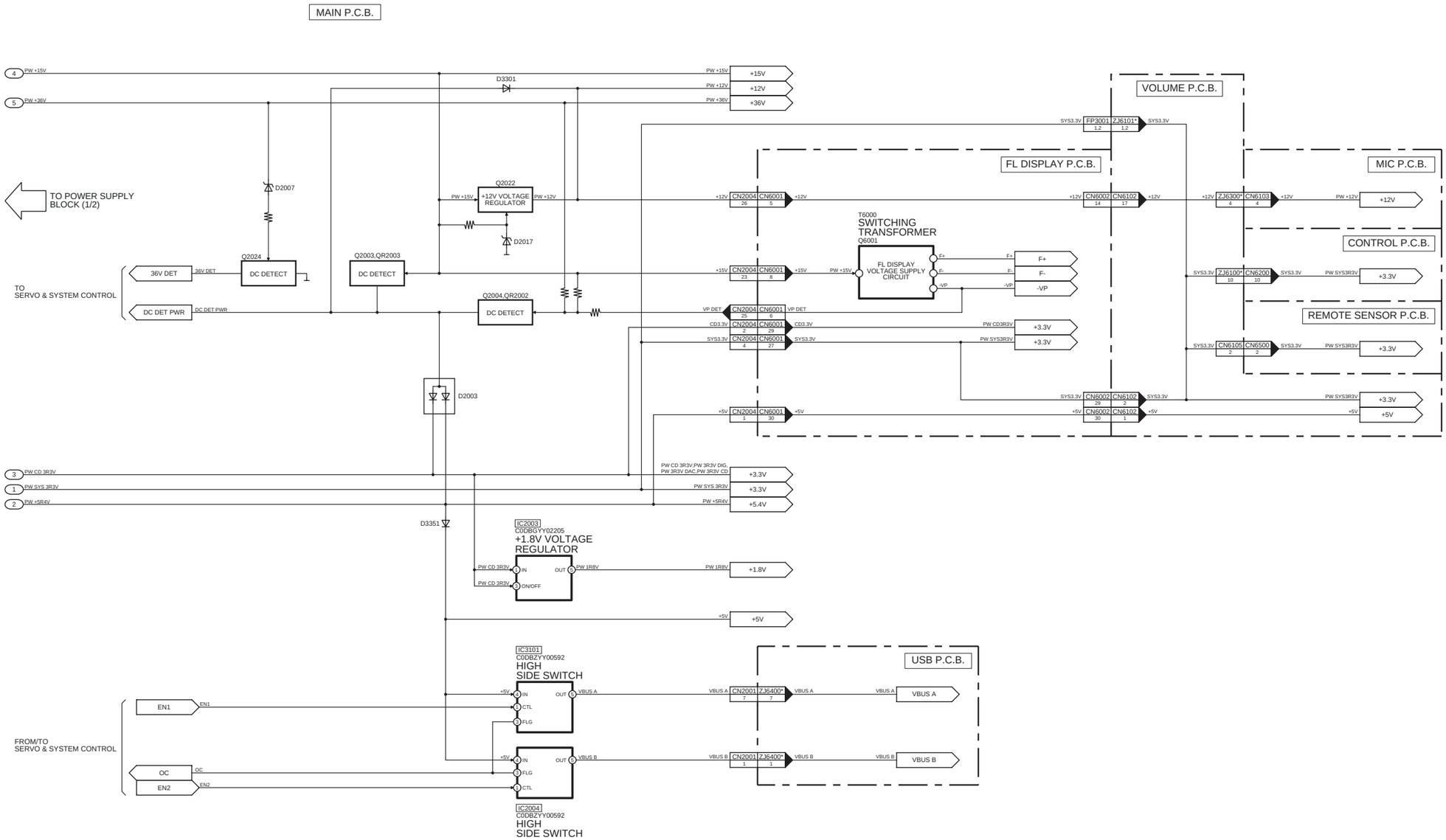

NOTE: " * " REF IS FOR INDICATION ONLY

SA-MAX700GS POWER SUPPLY (2/2) BLOCK DIAGRAM

13 Wiring Connection Diagram

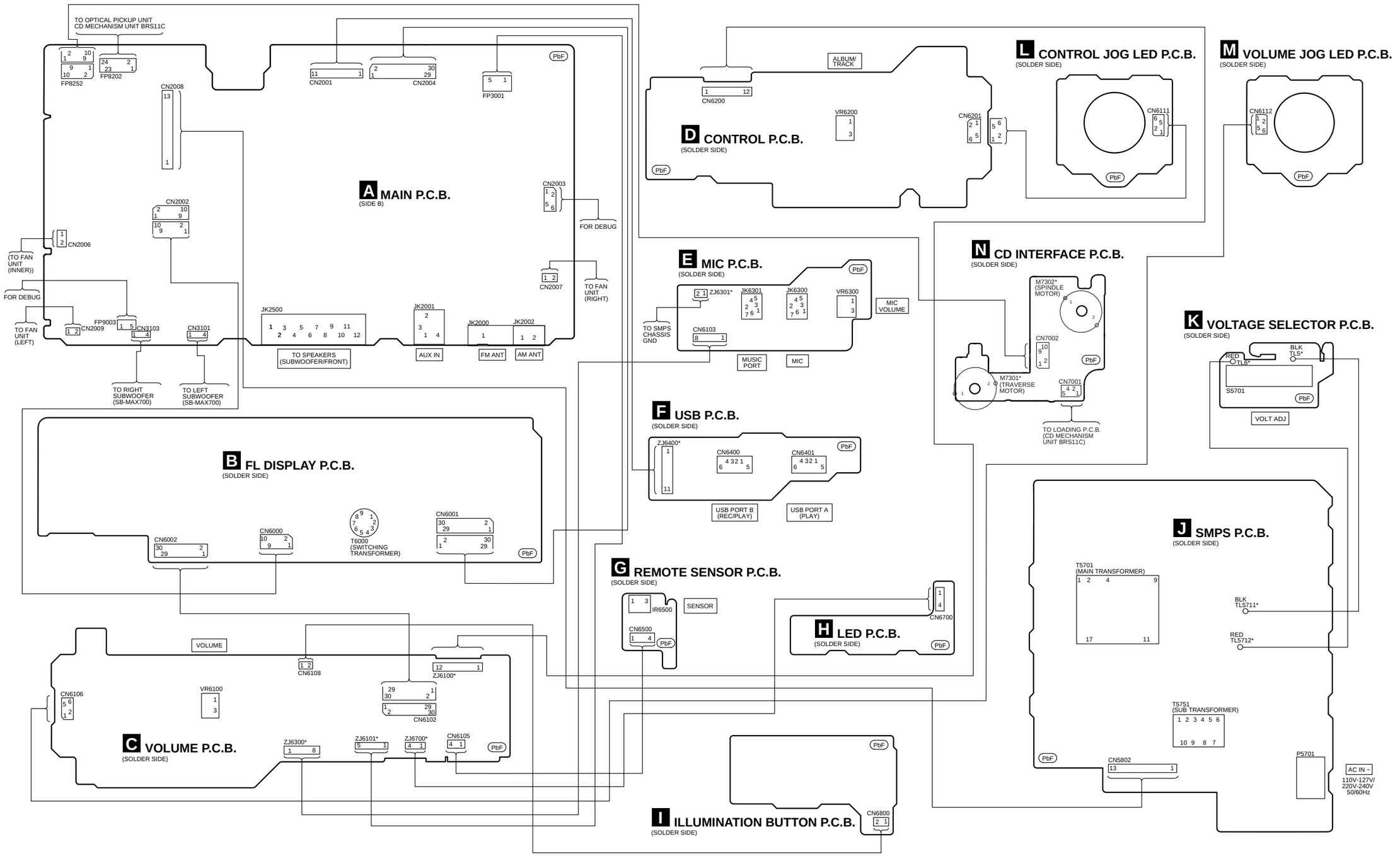

NOTE: " * " REF IS FOR INDICATION ONLY.

SA-MAX700GS WIRING CONNECTION DIAGRAM

14 Schematic Diagram

14.1. Schematic Diagram Notes

- **This schematic diagram may be modified at any time with the development of new technology.**

Notes:

S5701:	Voltage Selector switch.
S6000:	Playlist 2 switch.
S6001:	Playlist 3 switch.
S6002:	Playlist 4 switch.
S6003:	Playlist 1 switch.
S6004:	Playlist 5 switch.
S6005:	Playlist 6 switch.
S6006:	DJ switch.
S6100:	CD switch.
S6101:	Radio/EXT-IN switch.
S6102:	Stop (■) /Tune Mode switch.
S6103:	Memory switch.
S6104:	USB switch.
S6105:	Play/Pause (▶ / ❚❚) switch.
S6106:	Memory Rec/Pause switch.
S6107:	CD Open/Close switch.
S6200:	Manual EQ switch.
S6201:	Album/Track switch.
S6202:	D.BASS switch.
S6203:	Power (⏻/|) switch.
S6204:	Latin Preset EQ switch.
S6205:	Super Woofer switch.
S6206:	Forward (▶▶ / ▶▶|) switch.
S6207:	Rewind (|◀◀ / ◀◀) switch.
S6208:	USB Rec/Pause switch.
S6800:	Illumination switch.
S7201:	Reset switch.
VR6100:	Volume Jog.
VR6200:	Album/Track Jog.
VR6300:	Mic Jog.

- Important safety notice:

  Components identified by ⚠ mark have special characteristics important for safety.
  Furthermore, special parts which have purposes of fire-retardant (resistors), high quality sound (capacitors), low-noise (resistors), etc are used.
  When replacing any of components, be sure to use only manufacturer's specified parts shown in the parts list.

- In case of AC rated voltage Capacitors, the part no. and values will be indicated in the Schematic Diagram.
  AC rated voltage capacitors:
  C5701, C5702, C5703, C5704, C5705, C5707, C5708

- **Resistor**
  Unit of resistance is OHM [Ω] (K=1,000, M=1,000,000).

- **Capacitor**
  Unit of capacitance is μF, unless otherwise noted. F=Farads, pF=pico-Farad.

- **Coil**
  Unit of inductance is H, unless otherwise noted.

- *****
  REF IS FOR INDICATION ONLY.

- Voltage and signal line

  : +B signal line
  : -B signal line
  : CD Audio input signal line
  : Mic/Tuner/Music Port/AUX input signal line
  : Audio output signal line
  : USB signal line
  : AM signal line
  : FM signal line

CAUTION: FOR CONTINUED PROTECTION AGAINST FIRE HAZARD, REPLACE ONLY WITH SAME TYPE F1 T10AH 250V FUSE

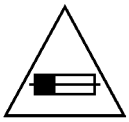

RISK OF FIRE-REPLACE FUSE AS MARKED.

FUSE CAUTION

These symbols located near the fuse indicates that the fuse used is a fast operating type. For continued protection againts fire harzard, replace with the same type fuse. fro rating, refer to the marking adjacent to the symbol.

14.2. Main (CD Servo/Micon/Damp) Circuit

SCHEMATIC DIAGRAM - 1

A MAIN (CD SERVO) CIRCUIT

: +B SIGNAL LINE : CD AUDIO INPUT SIGNAL LINE : AUDIO OUTPUT SIGNAL LINE : USB SIGNAL LINE

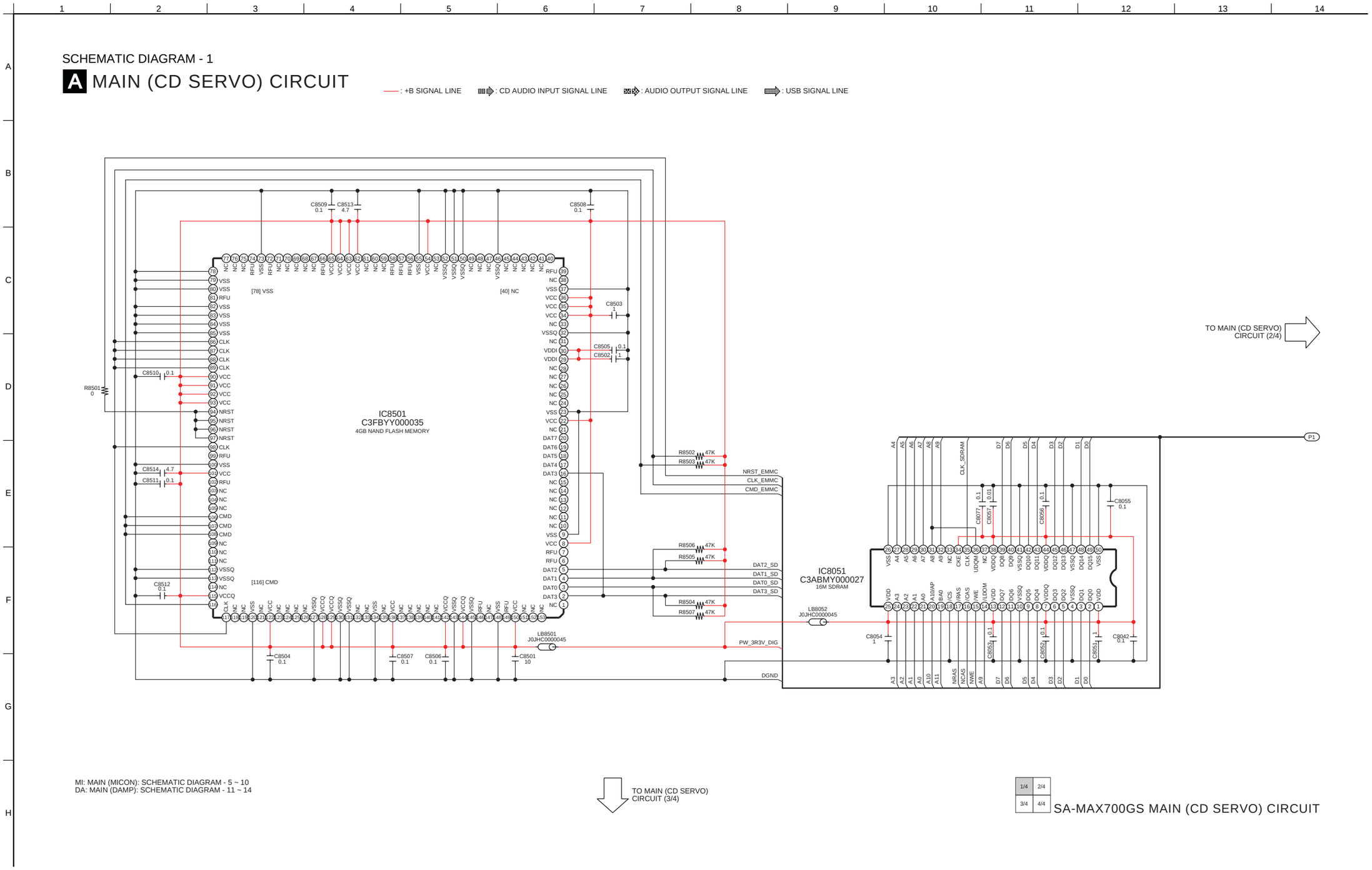

MI: MAIN (MICON): SCHEMATIC DIAGRAM - 5 ~ 10
DA: MAIN (DAMP): SCHEMATIC DIAGRAM - 11 ~ 14

1/4	2/4
3/4	4/4

SA-MAX700GS MAIN (CD SERVO) CIRCUIT

SCHEMATIC DIAGRAM - 2

A MAIN (CD SERVO) CIRCUIT

: +B SIGNAL LINE : CD AUDIO INPUT SIGNAL LINE : AUDIO OUTPUT SIGNAL LINE : USB SIGNAL LINE

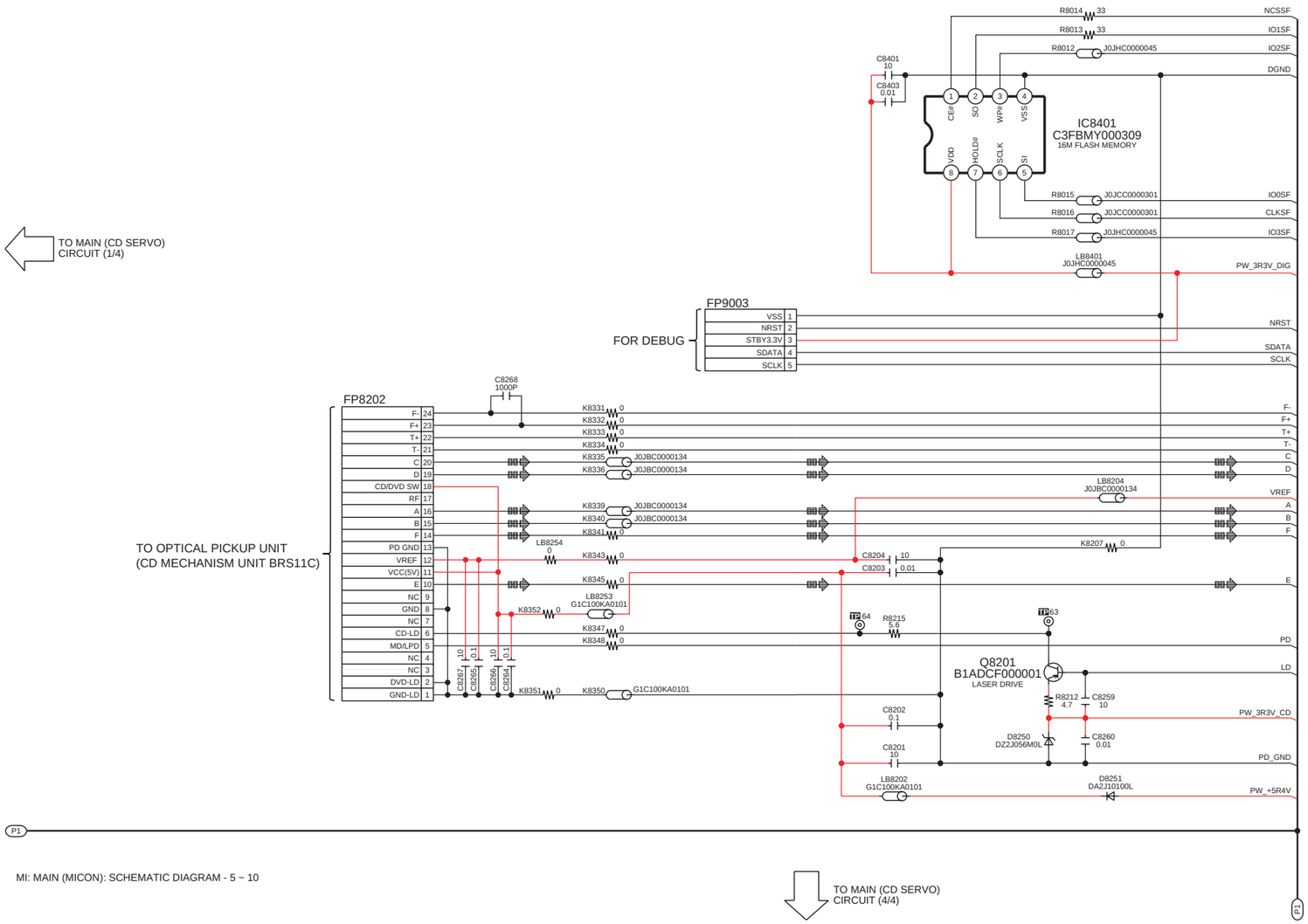

MI: MAIN (MICON): SCHEMATIC DIAGRAM - 5 ~ 10

TO MAIN (CD SERVO) CIRCUIT (4/4)

1/4	2/4
3/4	4/4

SA-MAX700GS MAIN (CD SERVO) CIRCUIT

SCHEMATIC DIAGRAM - 3

A MAIN (CD SERVO) CIRCUIT

—— : +B SIGNAL LINE : CD AUDIO INPUT SIGNAL LINE : AUDIO OUTPUT SIGNAL LINE : USB SIGNAL LINE

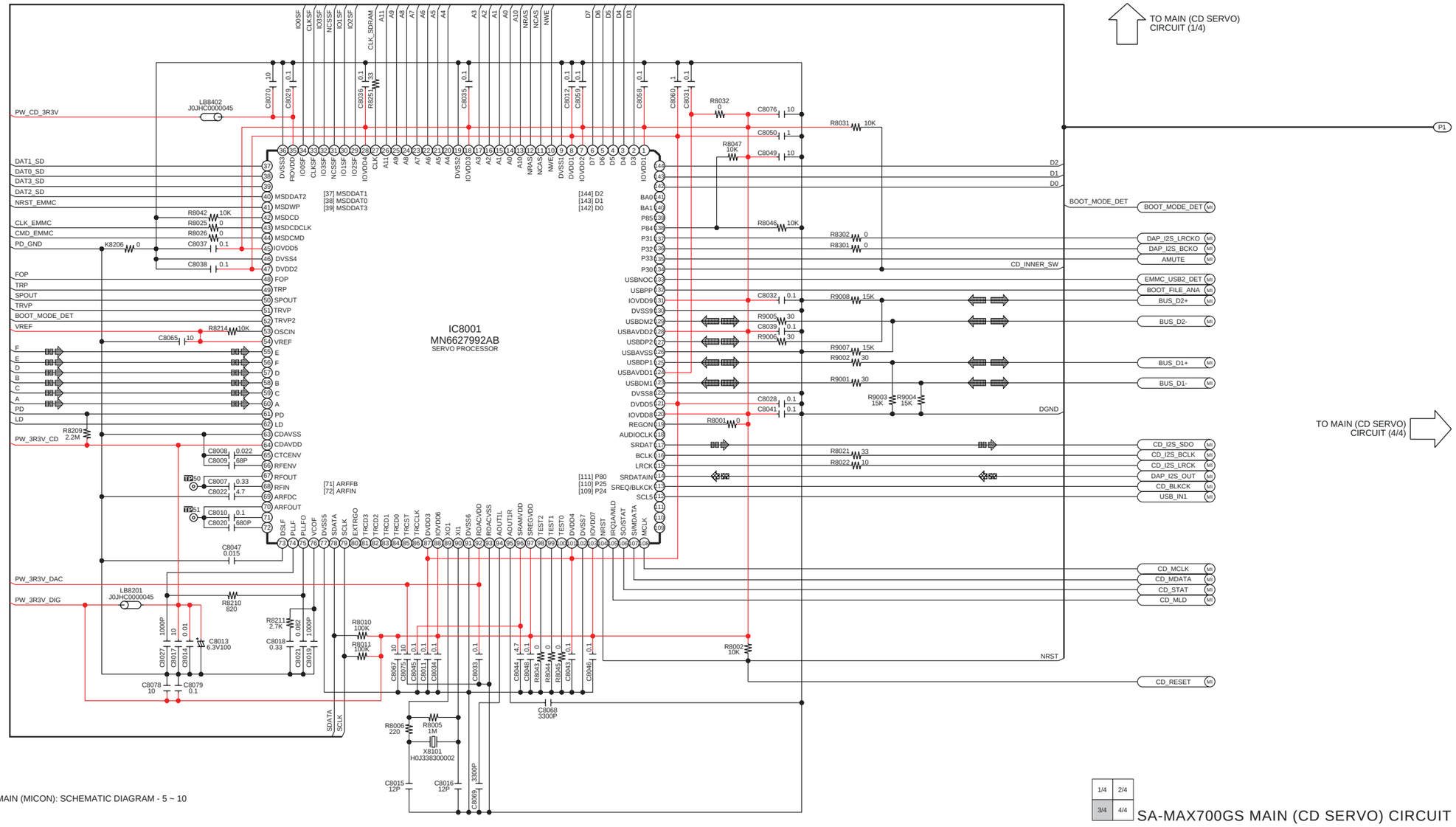

MI: MAIN (MICON): SCHEMATIC DIAGRAM - 5 ~ 10

1/4	2/4
3/4	4/4

SA-MAX700GS MAIN (CD SERVO) CIRCUIT

SCHEMATIC DIAGRAM - 4

A MAIN (CD SERVO) CIRCUIT

—— : +B SIGNAL LINE : CD AUDIO INPUT SIGNAL LINE : AUDIO OUTPUT SIGNAL LINE : USB SIGNAL LINE

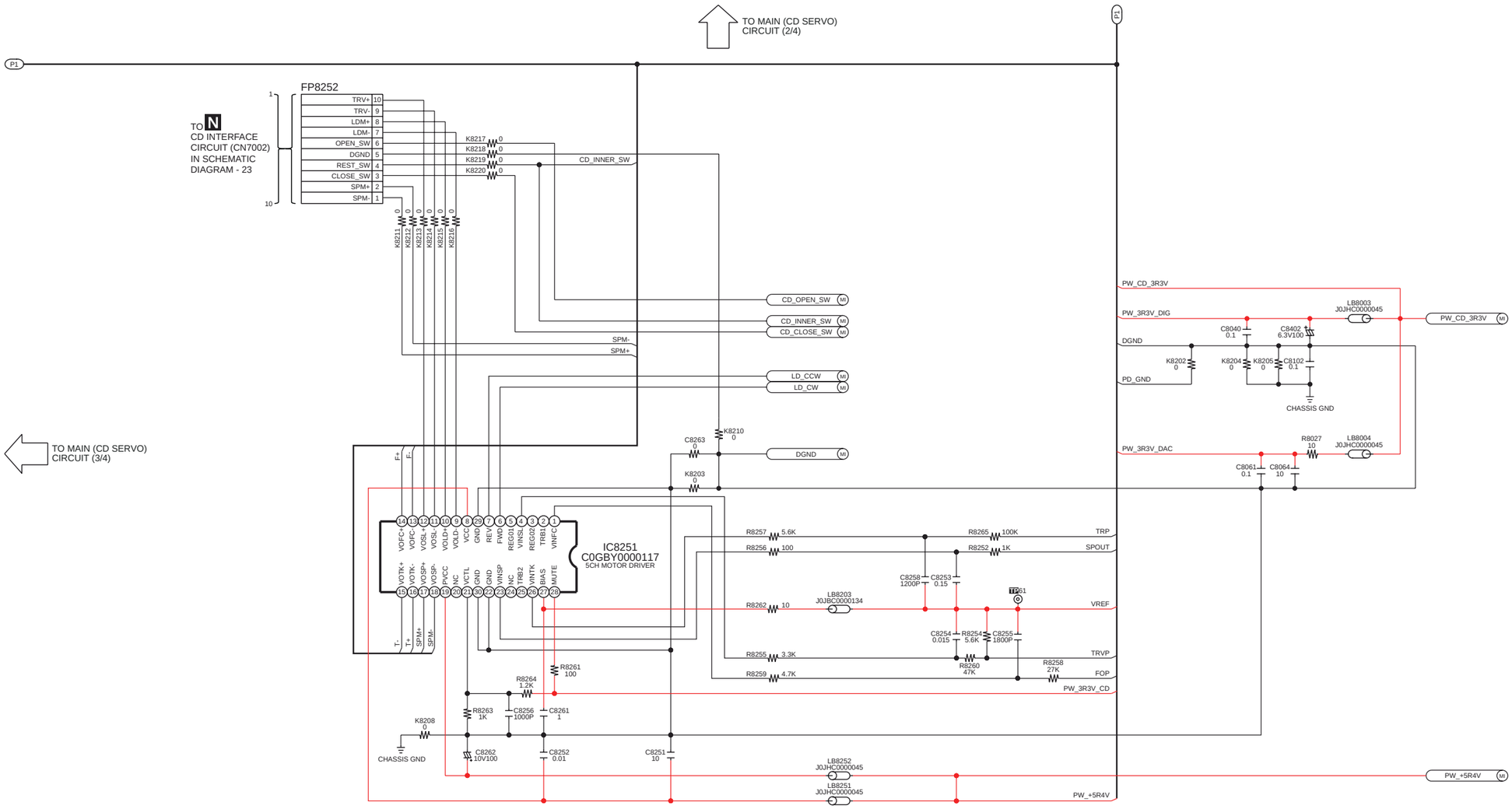

MI: MAIN (MICON): SCHEMATIC DIAGRAM - 5 ~ 10

1/4	2/4
3/4	4/4

SA-MAX700GS MAIN (CD SERVO) CIRCUIT

SCHEMATIC DIAGRAM - 5

A MAIN (MICON) CIRCUIT

: +B SIGNAL LINE
: -B SIGNAL LINE
: CD AUDIO INPUT SIGNAL LINE
: MIC/TUNER/MUSIC PORT/AUX AUDIO INPUT SIGNAL LINE
: AUDIO OUTPUT SIGNAL LINE
: AM SIGNAL LINE
: FM SIGNAL LINE
: USB SIGNAL LINE

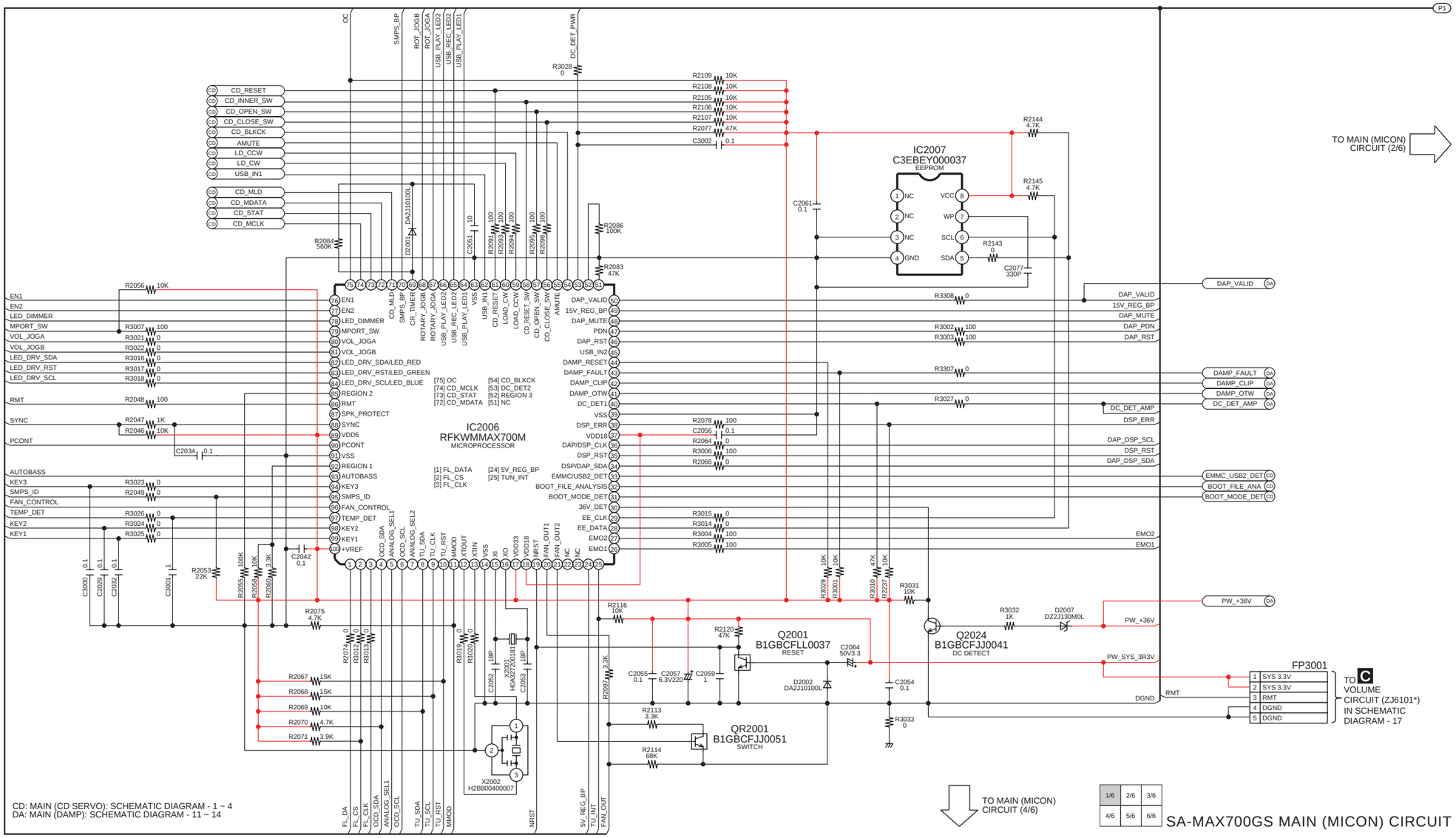

1/6	2/6	3/6
4/6	5/6	6/6

SA-MAX700GS MAIN (MICON) CIRCUIT

SCHEMATIC DIAGRAM - 6

A MAIN (MICON) CIRCUIT

: +B SIGNAL LINE
: -B SIGNAL LINE
: CD AUDIO INPUT SIGNAL LINE
: MIC/TUNER/MUSIC PORT/AUX AUDIO INPUT SIGNAL LINE
: AUDIO OUTPUT SIGNAL LINE
: AM SIGNAL LINE
: FM SIGNAL LINE
: USB SIGNAL LINE

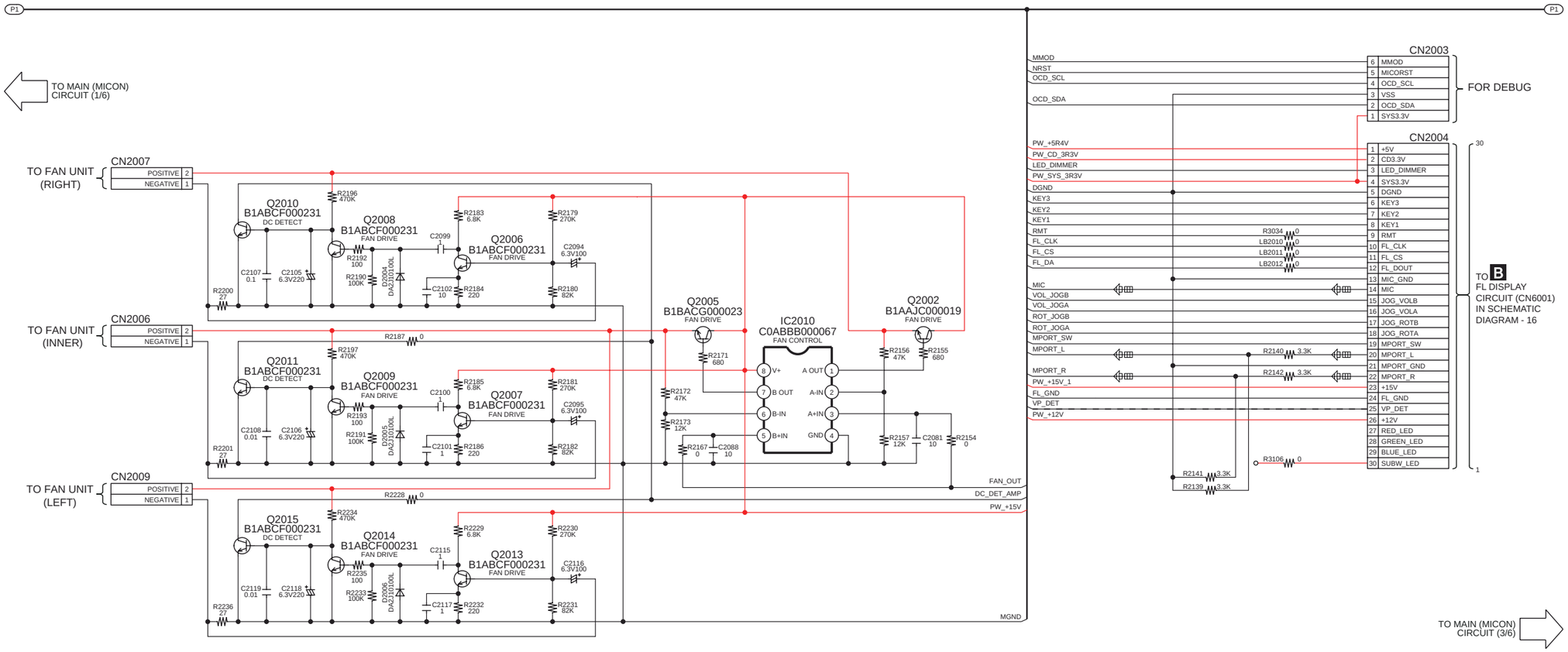

CD: MAIN (CD SERVO): SCHEMATIC DIAGRAM - 1 ~ 4
DA: MAIN (DAMP): SCHEMATIC DIAGRAM - 11 ~ 14

SCHEMATIC DIAGRAM - 7

A MAIN (MICON) CIRCUIT

: +B SIGNAL LINE
: -B SIGNAL LINE
: CD AUDIO INPUT SIGNAL LINE
: MIC/TUNER/MUSIC PORT/AUX AUDIO INPUT SIGNAL LINE
: AUDIO OUTPUT SIGNAL LINE
: AM SIGNAL LINE
: FM SIGNAL LINE
: USB SIGNAL LINE

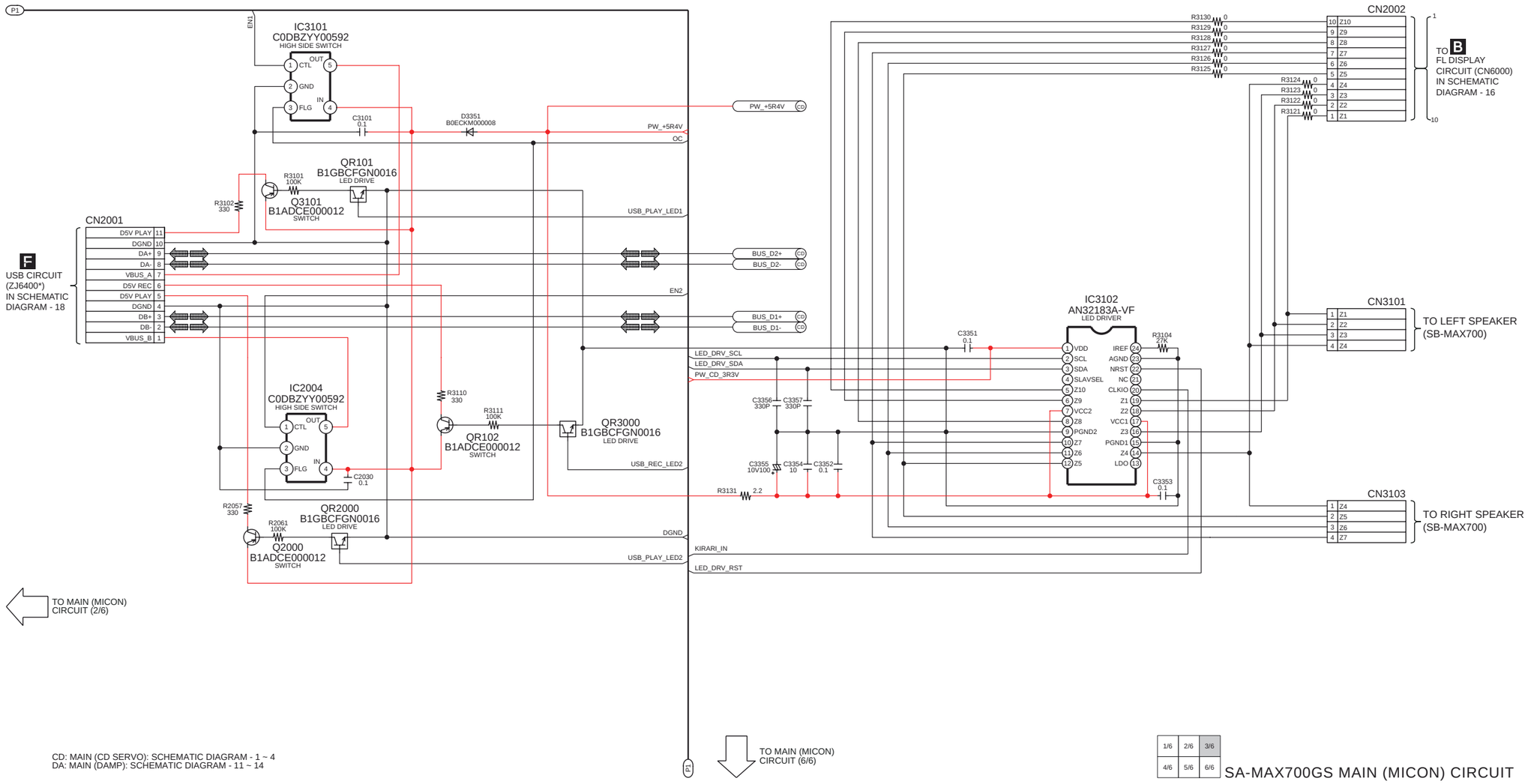

CD: MAIN (CD SERVO): SCHEMATIC DIAGRAM - 1 ~ 4
DA: MAIN (DAMP): SCHEMATIC DIAGRAM - 11 ~ 14

1/6	2/6	3/6
4/6	5/6	6/6

SA-MAX700GS MAIN (MICON) CIRCUIT

SCHEMATIC DIAGRAM - 8

A MAIN (MICON) CIRCUIT

: +B SIGNAL LINE
: -B SIGNAL LINE
: CD AUDIO INPUT SIGNAL LINE
: MIC/TUNER/MUSIC PORT/AUX AUDIO INPUT SIGNAL LINE
: AUDIO OUTPUT SIGNAL LINE
: AM SIGNAL LINE
: FM SIGNAL LINE
: USB SIGNAL LINE

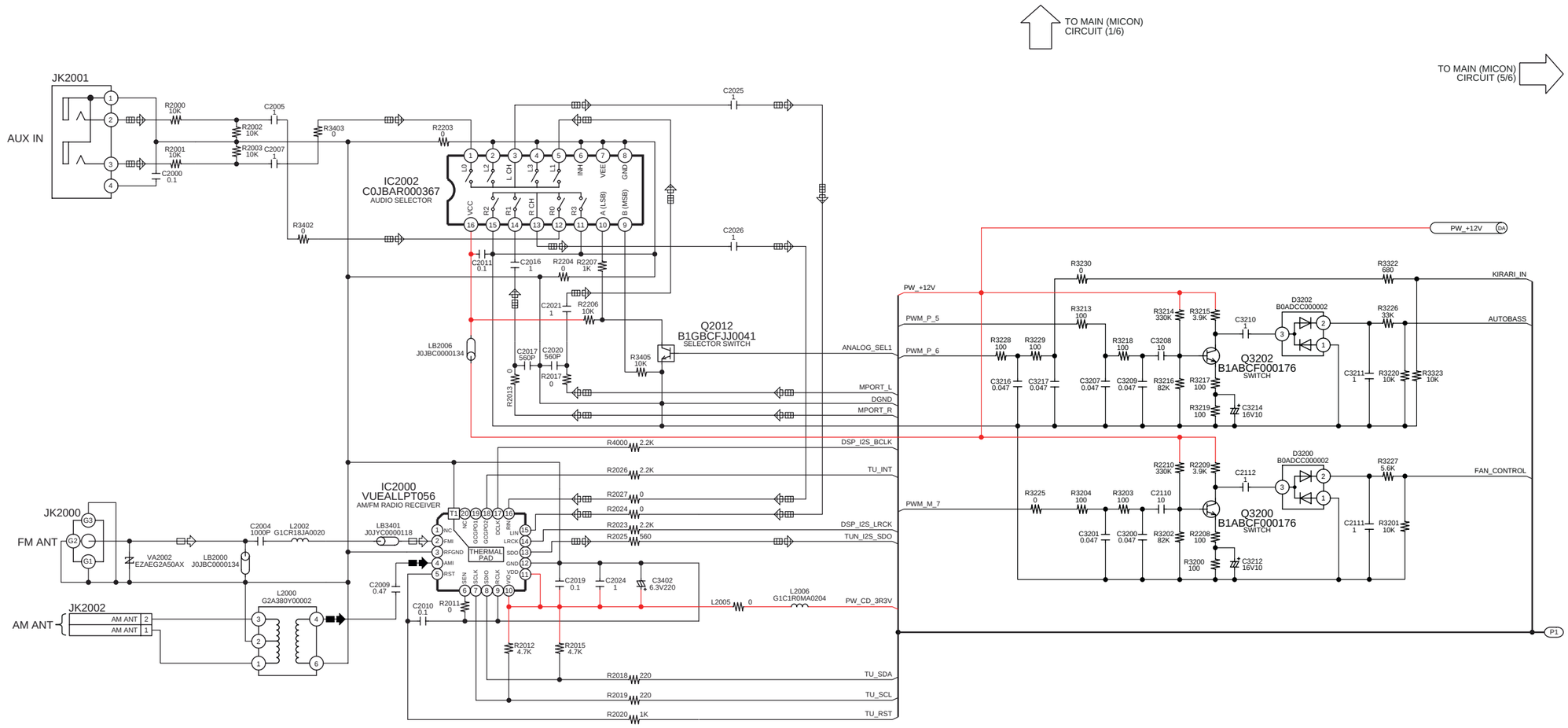

CD: MAIN (CD SERVO): SCHEMATIC DIAGRAM - 1 ~ 4
DA: MAIN (DAMP): SCHEMATIC DIAGRAM - 11 ~ 14

1/6	2/6	3/6
4/6	5/6	6/6

SA-MAX700GS MAIN (MICON) CIRCUIT

SCHEMATIC DIAGRAM - 9

A MAIN (MICON) CIRCUIT

: +B SIGNAL LINE
: -B SIGNAL LINE
: CD AUDIO INPUT SIGNAL LINE
: MIC/TUNER/MUSIC PORT/AUX AUDIO INPUT SIGNAL LINE
: AUDIO OUTPUT SIGNAL LINE
: AM SIGNAL LINE
: FM SIGNAL LINE
: USB SIGNAL LINE

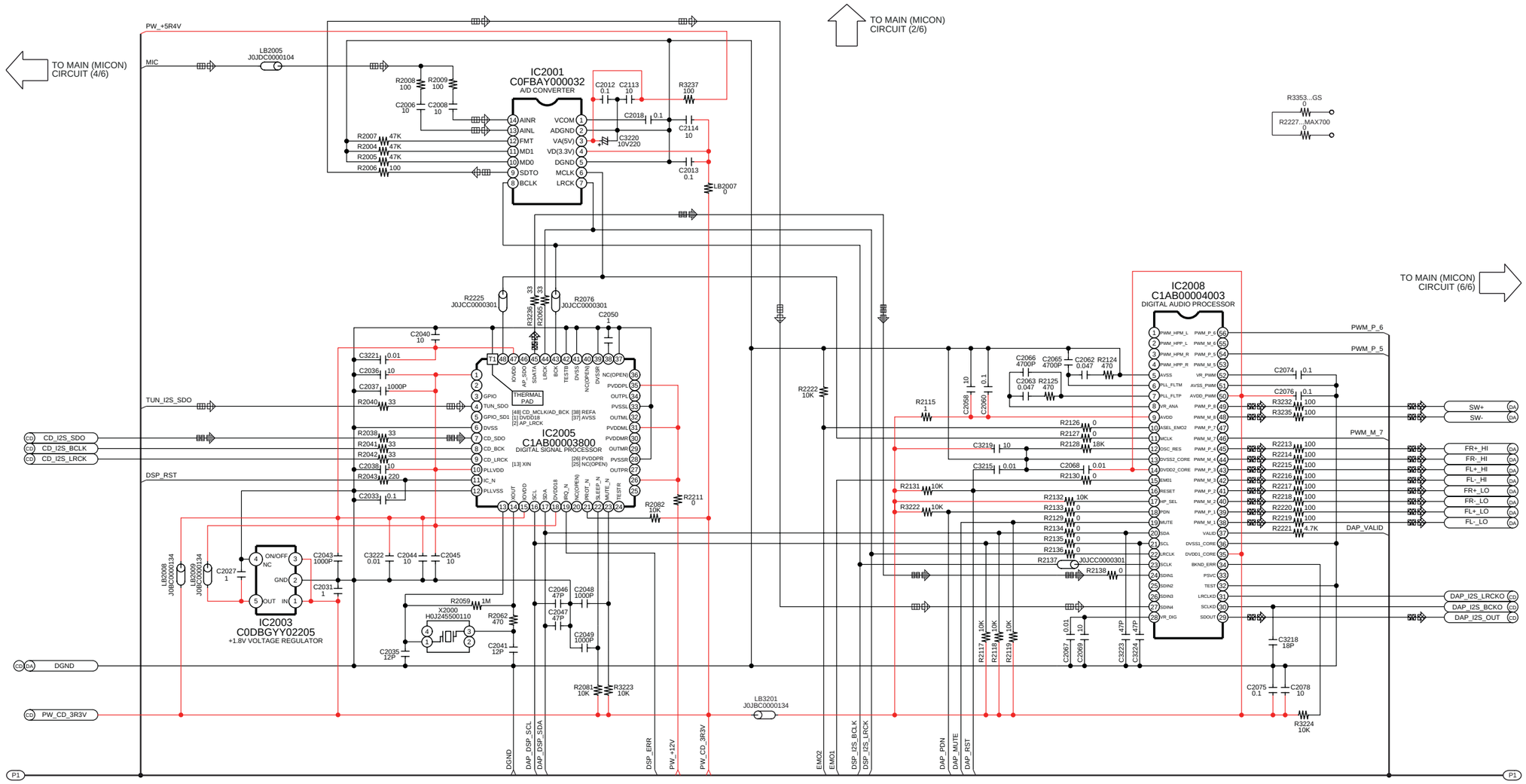

CD: MAIN (CD SERVO): SCHEMATIC DIAGRAM - 1 ~ 4
DA: MAIN (DAMP): SCHEMATIC DIAGRAM - 11 ~ 14

1/6	2/6	3/6
4/6	5/6	6/6

SA-MAX700GS MAIN (MICON) CIRCUIT

15 16 17 18 19 20 21 22 23 24 25 26 27 28

SCHEMATIC DIAGRAM - 10

A MAIN (MICON) CIRCUIT

: +B SIGNAL LINE
: -B SIGNAL LINE
: CD AUDIO INPUT SIGNAL LINE
: MIC/TUNER/MUSIC PORT/AUX AUDIO INPUT SIGNAL LINE
: AUDIO OUTPUT SIGNAL LINE
: AM SIGNAL LINE
: FM SIGNAL LINE
: USB SIGNAL LINE

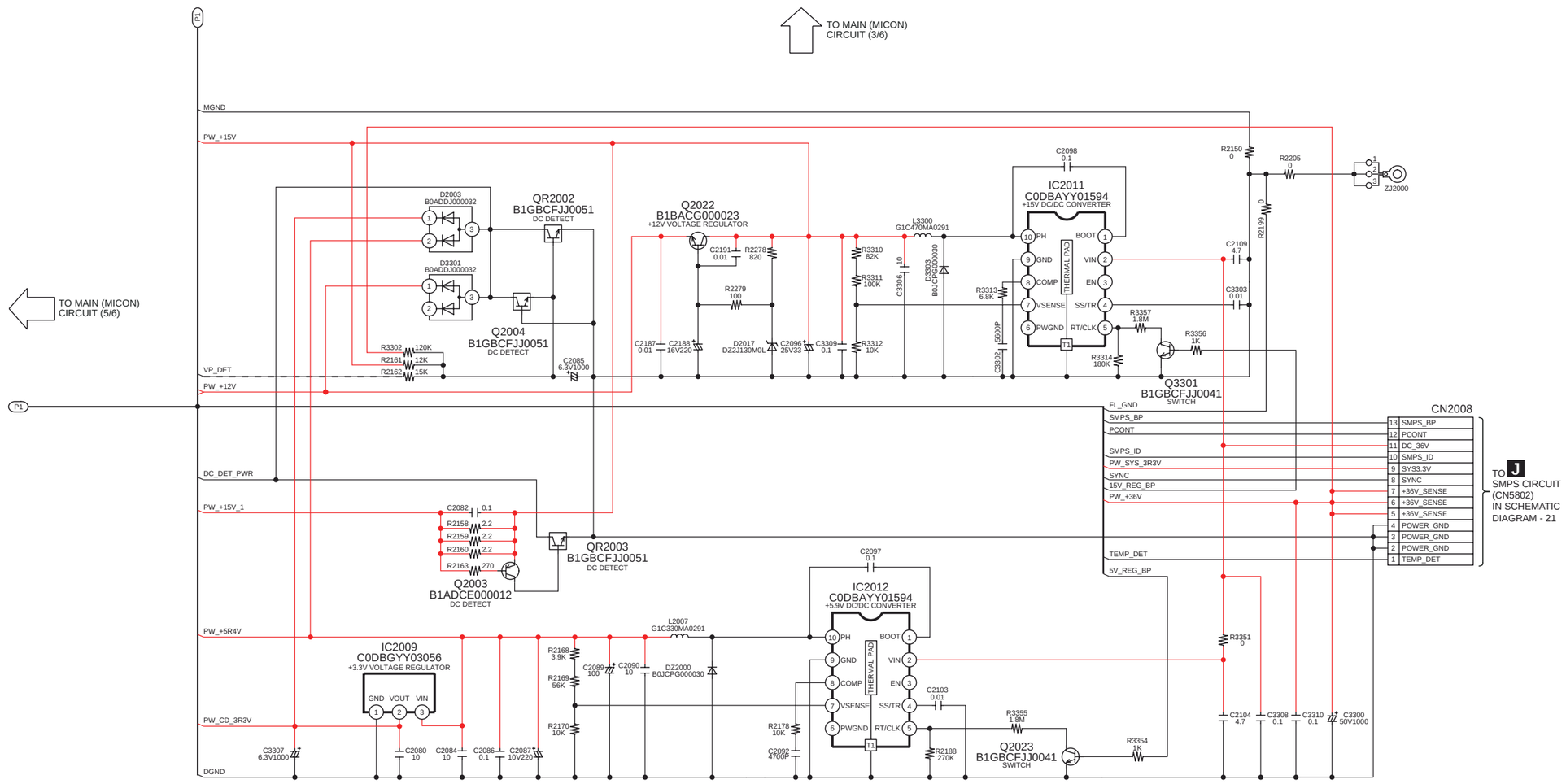

CD: MAIN (CD SERVO): SCHEMATIC DIAGRAM - 1 ~ 4
DA: MAIN (DAMP): SCHEMATIC DIAGRAM - 11 ~ 14

1/6	2/6	3/6
4/6	5/6	6/6

SA-MAX700GS MAIN (MICON) CIRCUIT

SCHEMATIC DIAGRAM - 11

A MAIN (DAMP) CIRCUIT

—— : +B SIGNAL LINE ▨ : AUDIO OUTPUT SIGNAL LINE

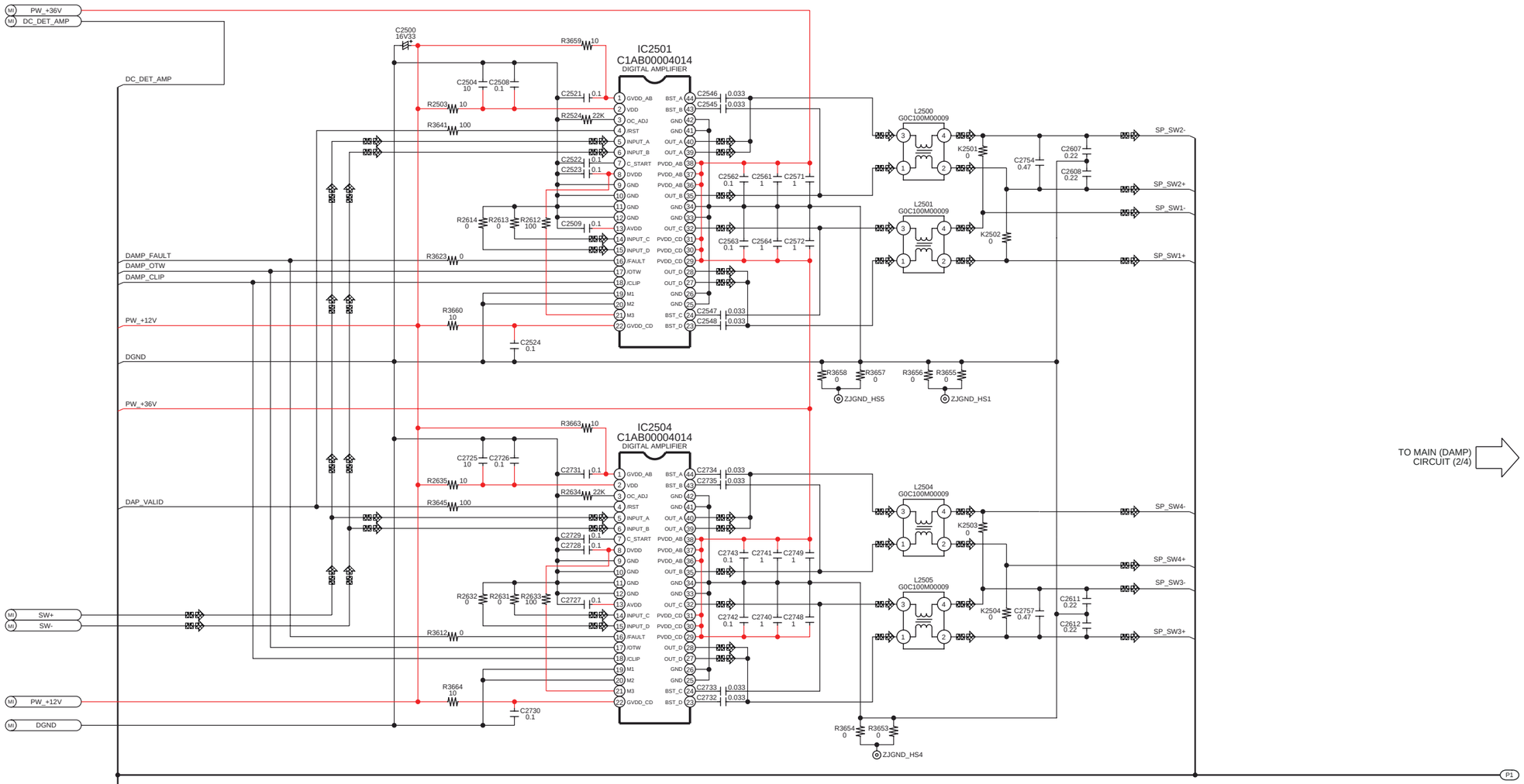

1/4	2/4
3/4	4/4

SA-MAX700GS MAIN (DAMP) CIRCUIT

SCHEMATIC DIAGRAM - 12

A MAIN (DAMP) CIRCUIT

—— : +B SIGNAL LINE ▨ : AUDIO OUTPUT SIGNAL LINE

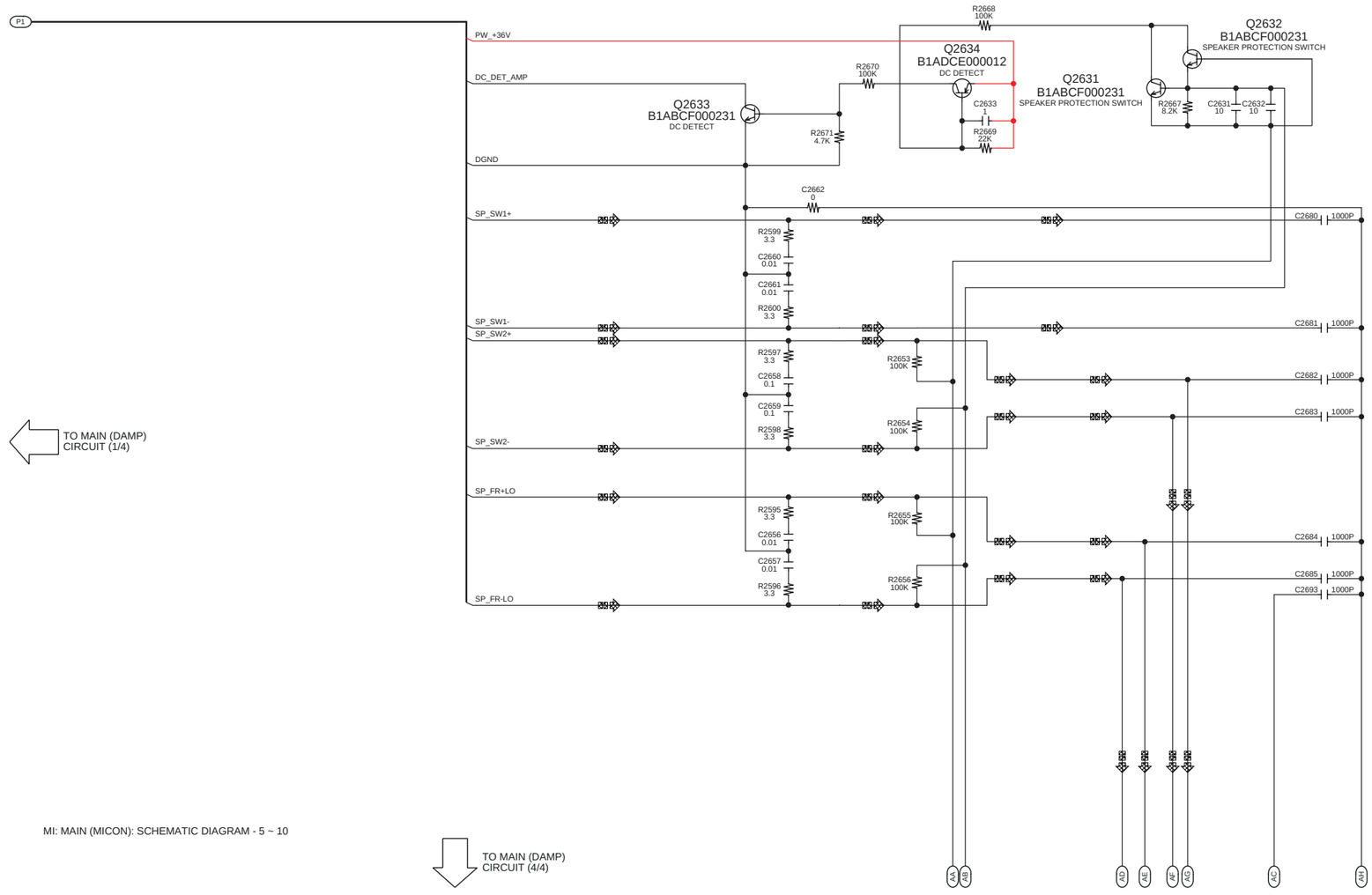

SCHEMATIC DIAGRAM - 13

A MAIN (DAMP) CIRCUIT

—— : +B SIGNAL LINE ⊠ : AUDIO OUTPUT SIGNAL LINE

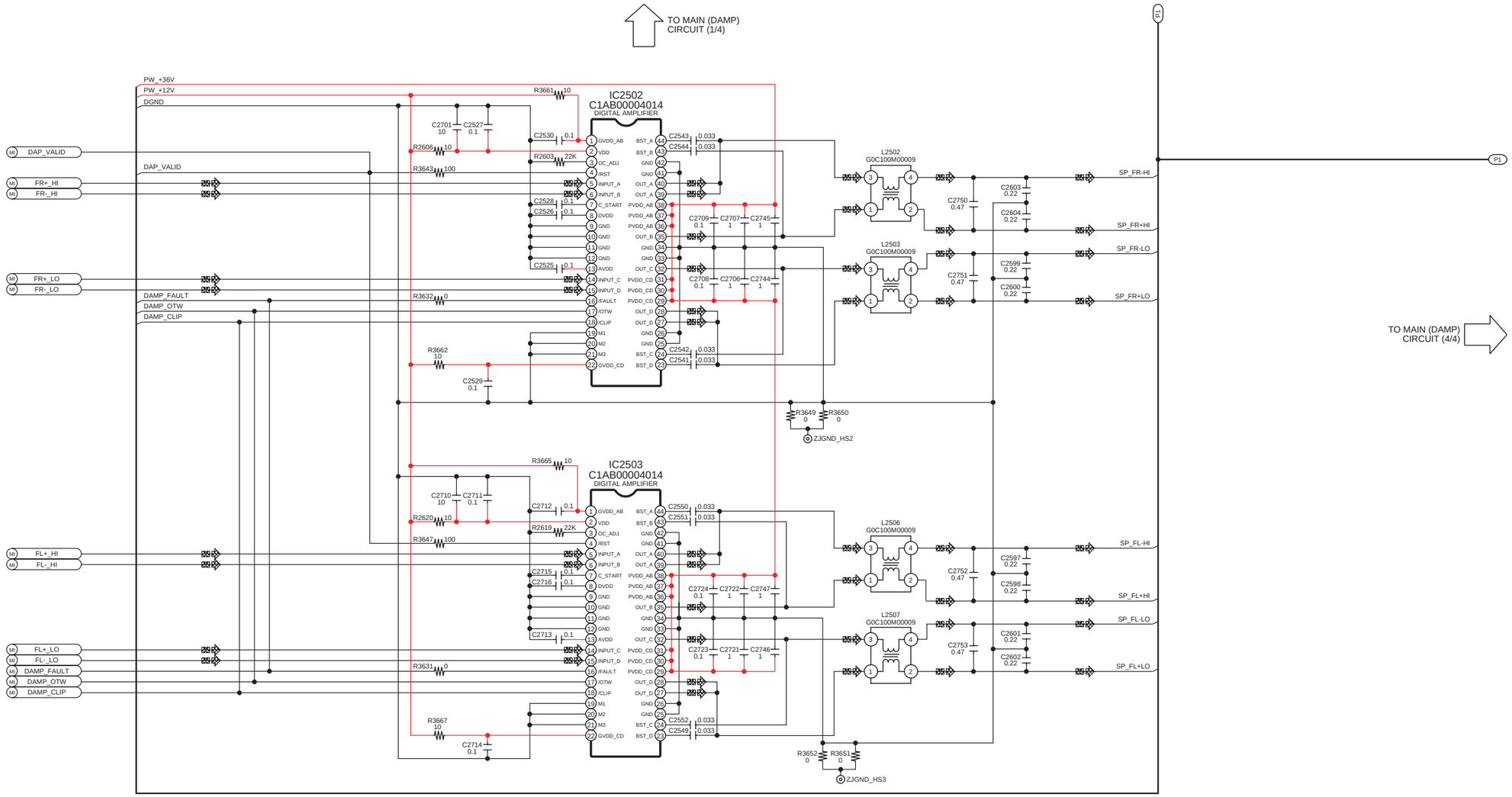

MI: MAIN (MICON): SCHEMATIC DIAGRAM - 5 ~ 10

1/4	2/4
3/4	4/4

SA-MAX700GS MAIN (DAMP) CIRCUIT

SCHEMATIC DIAGRAM - 14

A MAIN (DAMP) CIRCUIT

—— : +B SIGNAL LINE ▷▷▷ : AUDIO OUTPUT SIGNAL LINE

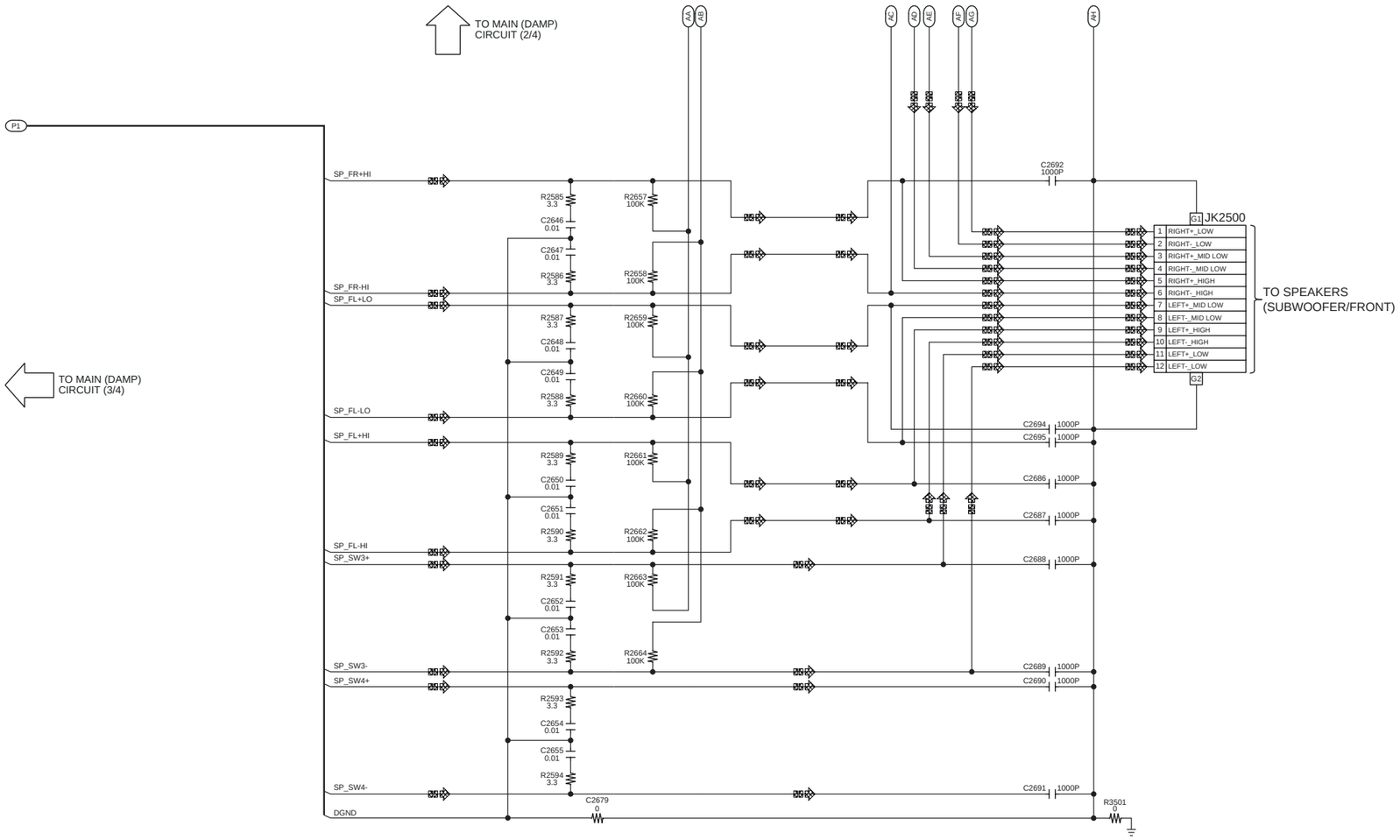

MI: MAIN (MICON): SCHEMATIC DIAGRAM - 5 ~ 10

1/4	2/4
3/4	4/4

SA-MAX700GS MAIN (DAMP) CIRCUIT

14.3. FL Display Circuit

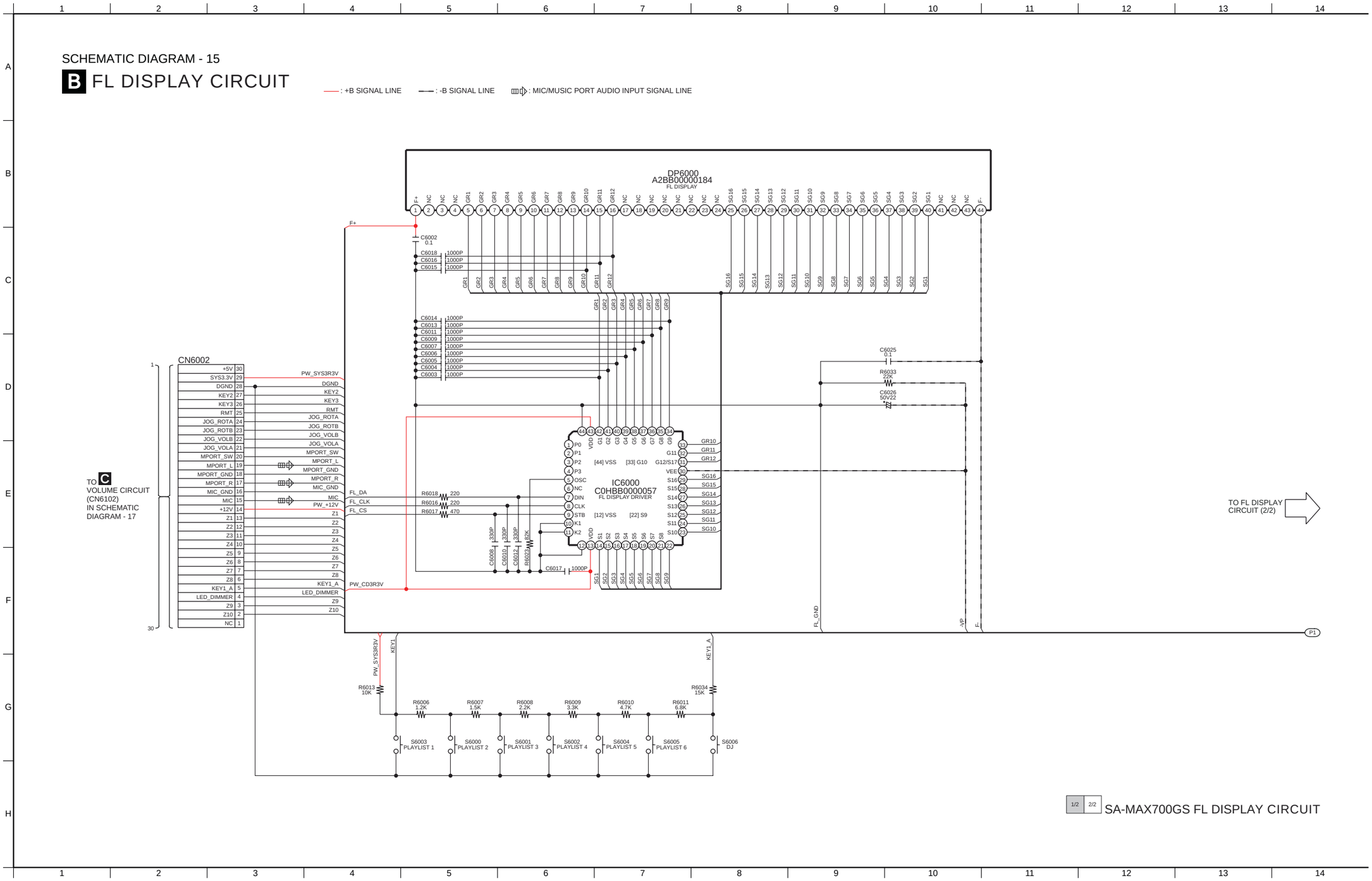

SCHEMATIC DIAGRAM - 16

B FL DISPLAY CIRCUIT

: +B SIGNAL LINE : -B SIGNAL LINE : MIC/MUSIC PORT AUDIO INPUT SIGNAL LINE

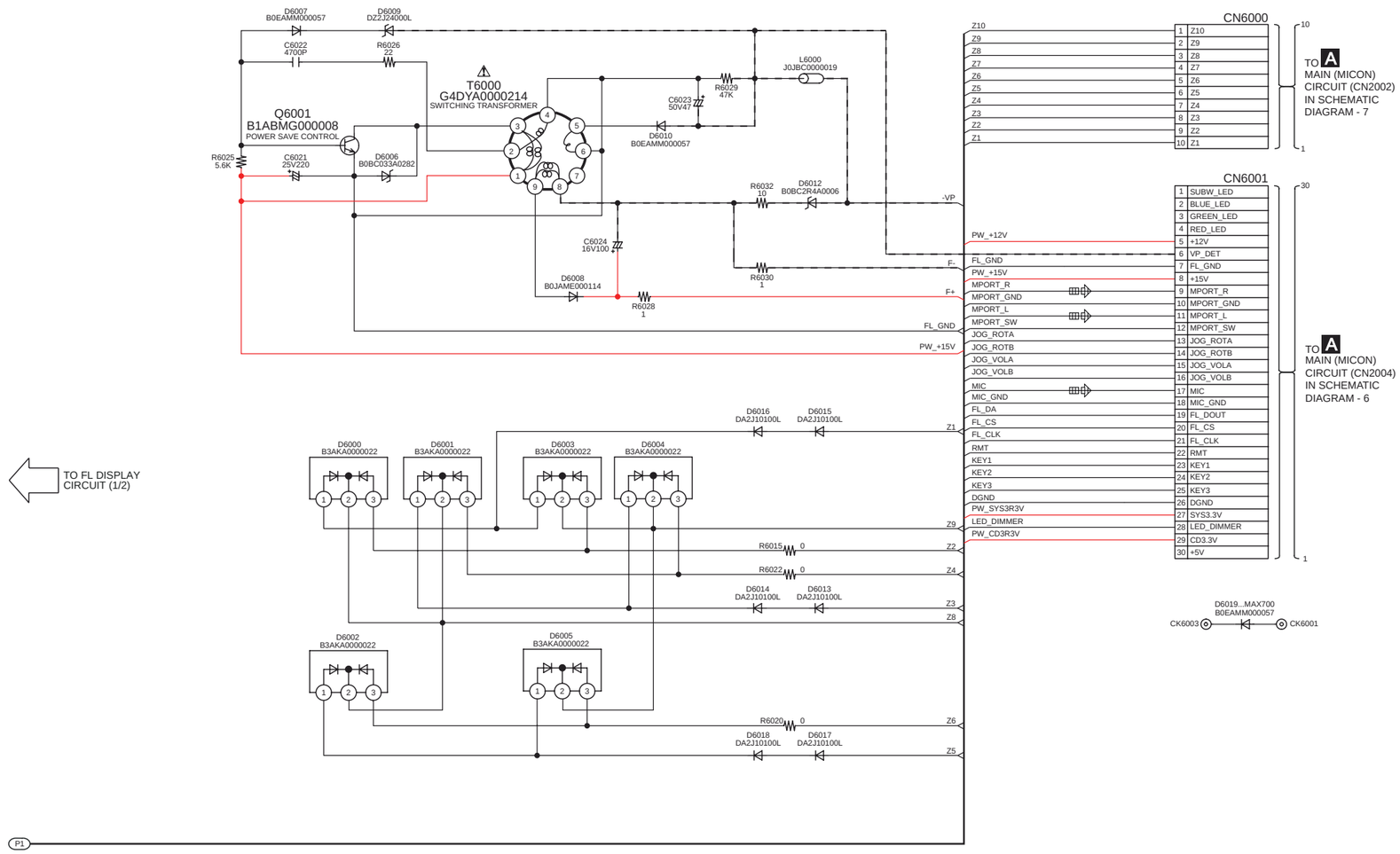

1/2 2/2 SA-MAX700GS FL DISPLAY CIRCUIT

14.4. Volume Circuit

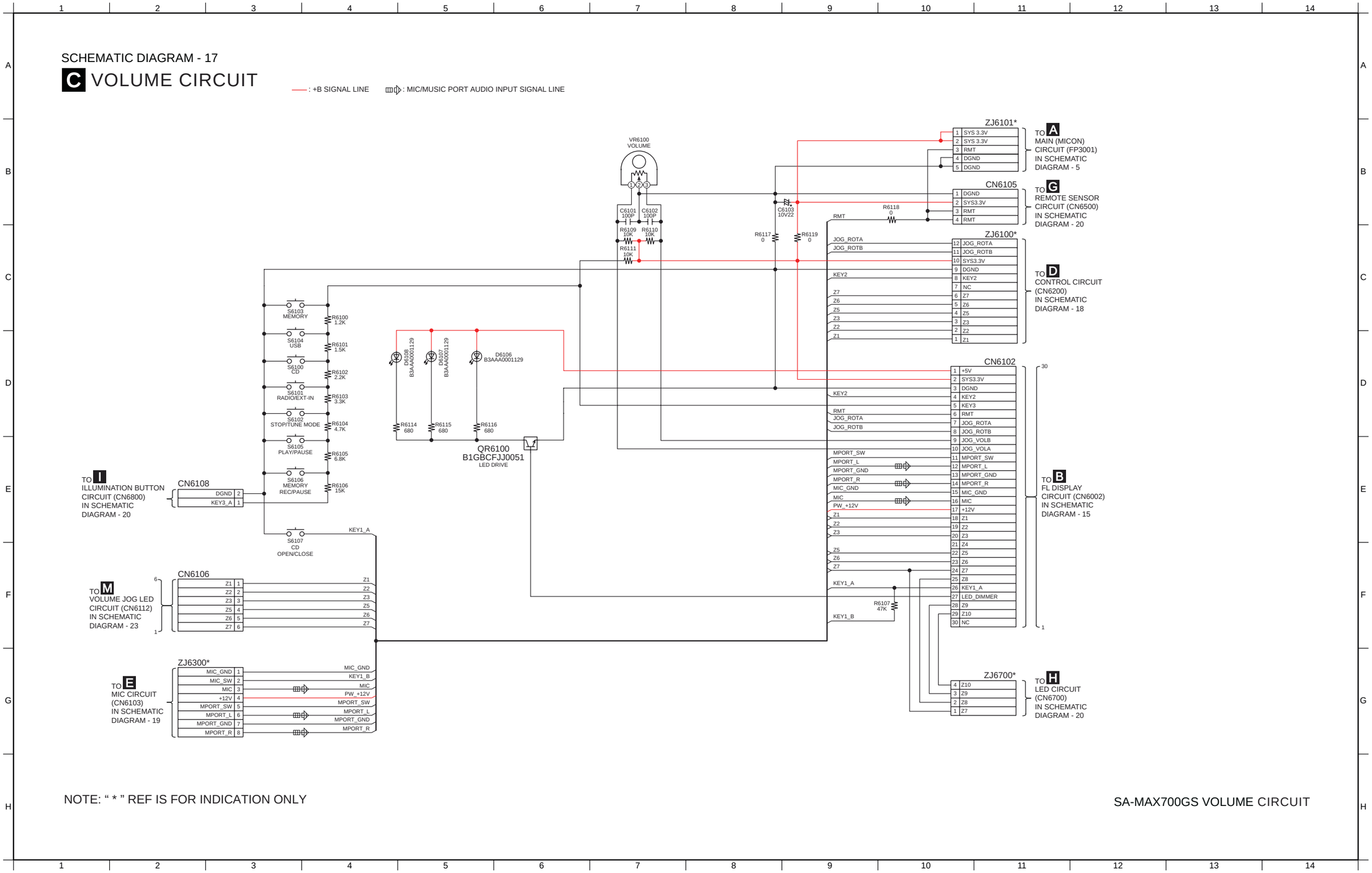

NOTE: " * " REF IS FOR INDICATION ONLY

SA-MAX700GS VOLUME CIRCUIT

14.5. Control & USB Circuit

SCHEMATIC DIAGRAM - 18

D CONTROL CIRCUIT

—— : +B SIGNAL LINE

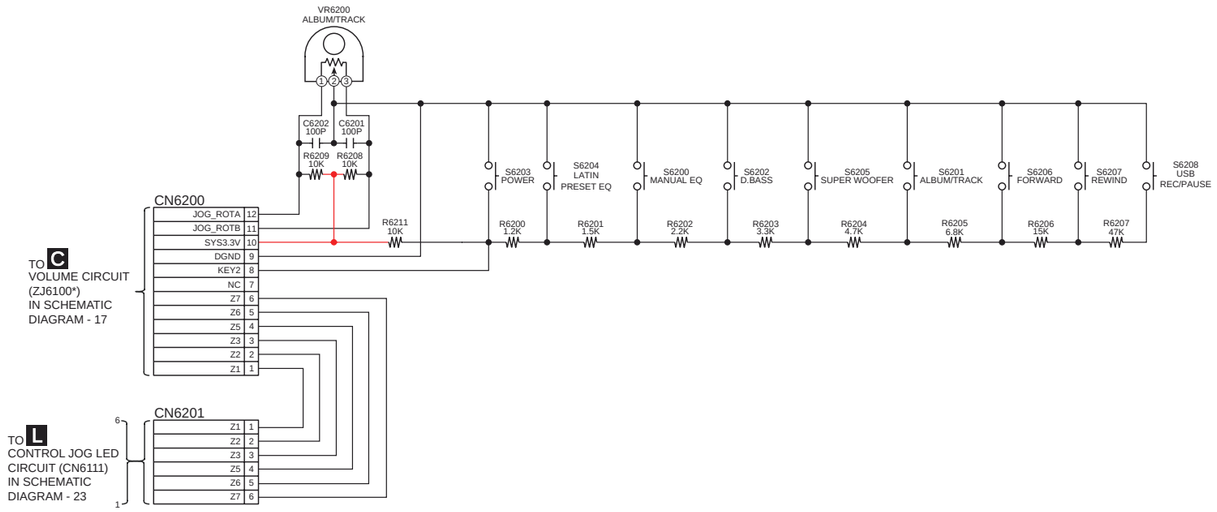

F USB CIRCUIT

—— : +B SIGNAL LINE ⇨ : USB SIGNAL LINE

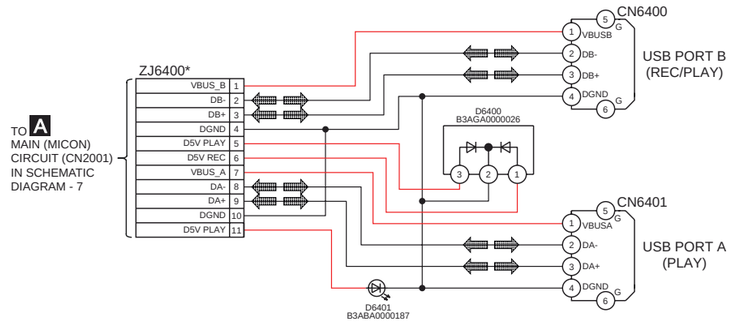

NOTE: " * " REF IS FOR INDICATION ONLY

SA-MAX700GS CONTROL / USB CIRCUIT

14.6. Mic Circuit

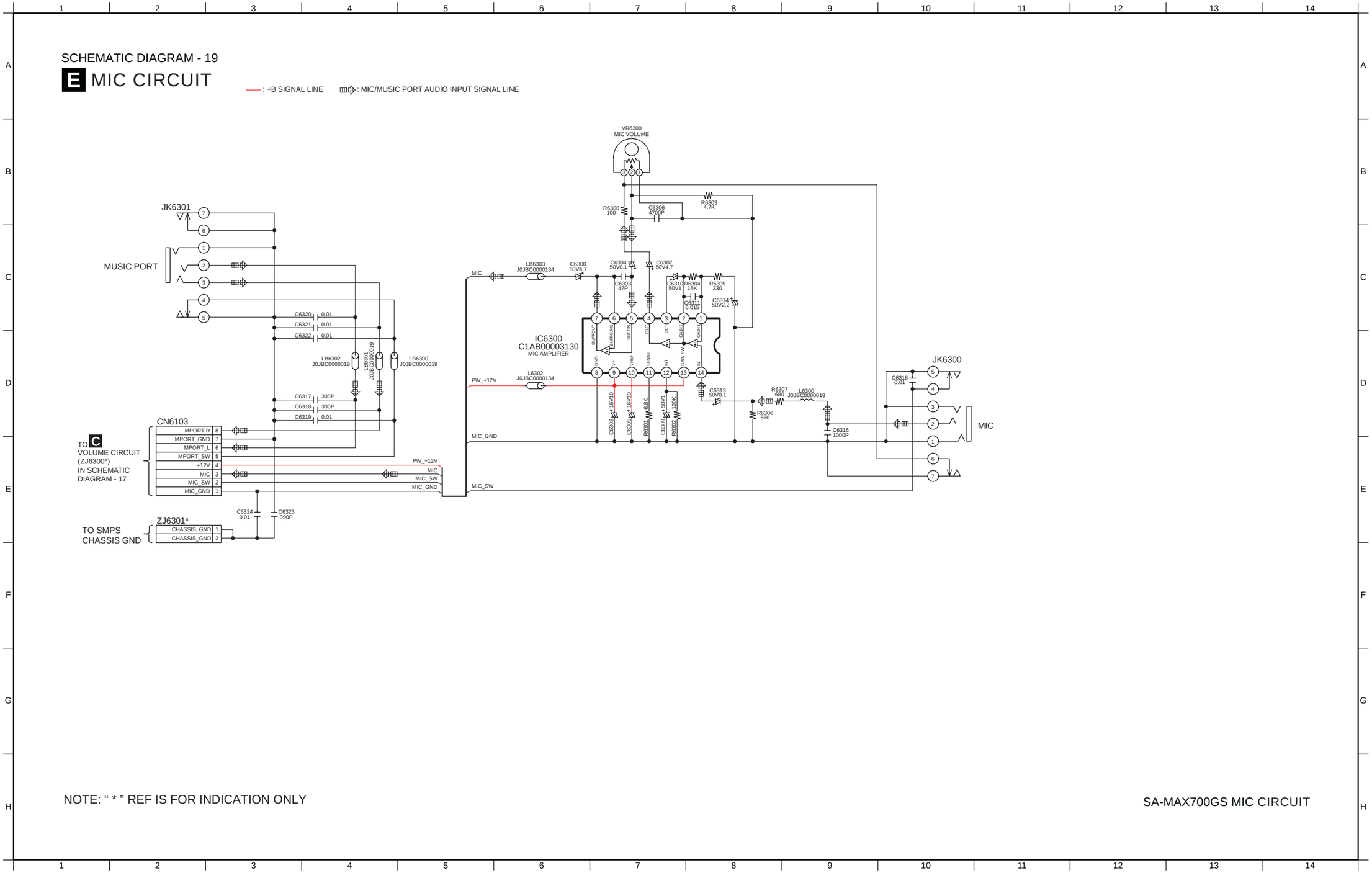

14.7. Remote Sensor, LED & Illumination Button Circuit

SCHEMATIC DIAGRAM - 20

G REMOTE SENSOR CIRCUIT

—— : +B SIGNAL LINE

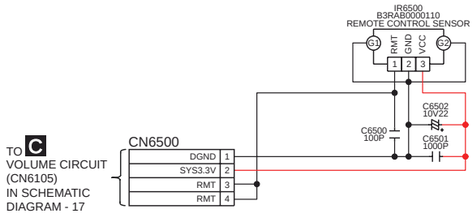

H LED CIRCUIT

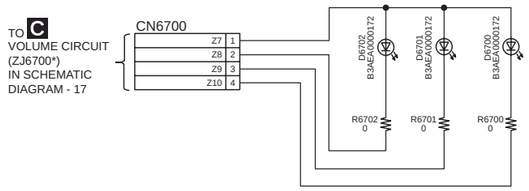

I ILLUMINATION BUTTON CIRCUIT

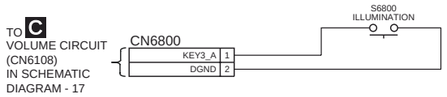

NOTE: " * " REF IS FOR INDICATION ONLY

SA-MAX700GS REMOTE SENSOR / LED / ILLUMINATION BUTTON CIRCUIT

14.8. SMPS Circuit

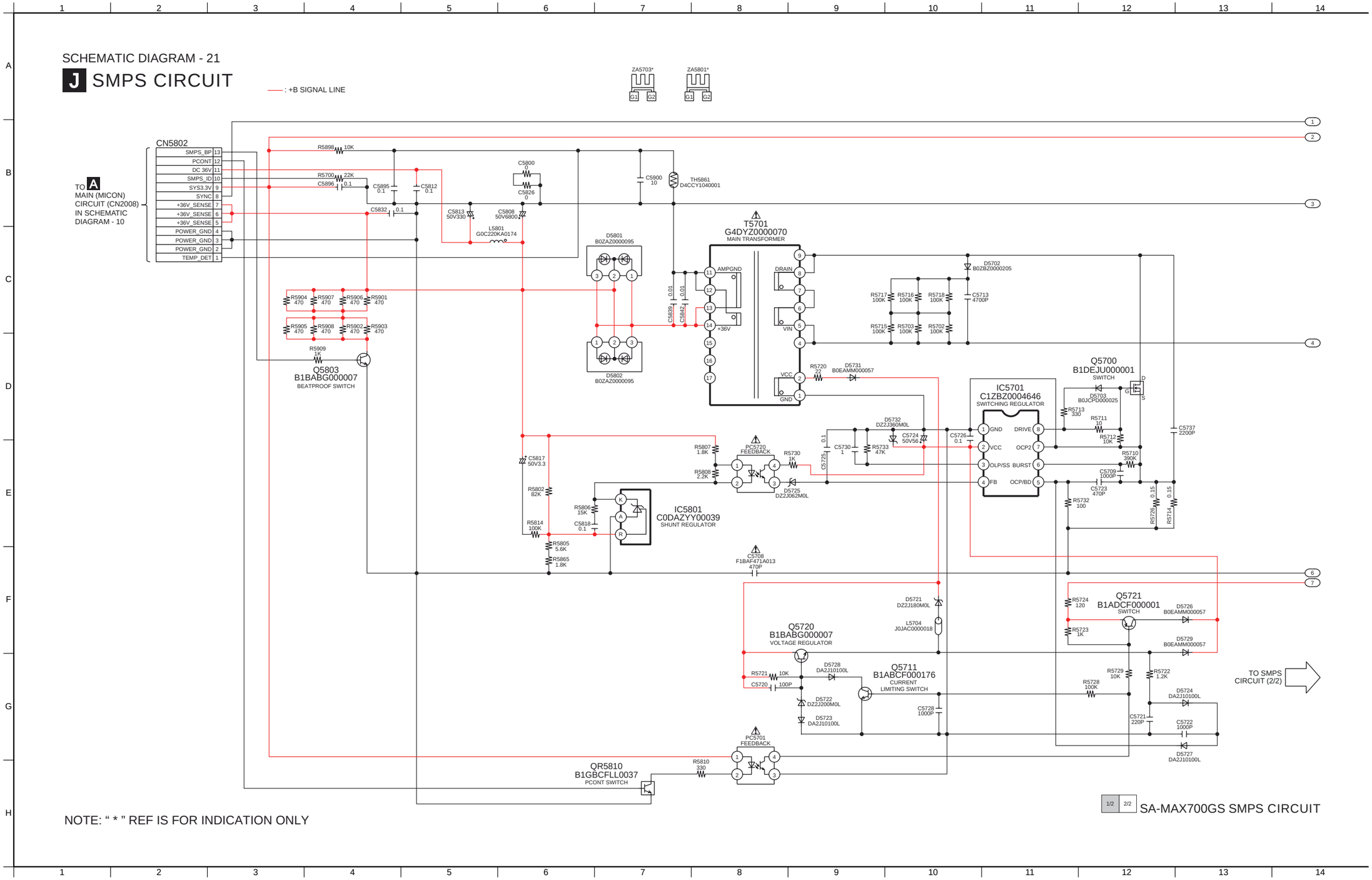

NOTE: " * " REF IS FOR INDICATION ONLY

SCHEMATIC DIAGRAM - 22

J SMPS CIRCUIT

—— : +B SIGNAL LINE

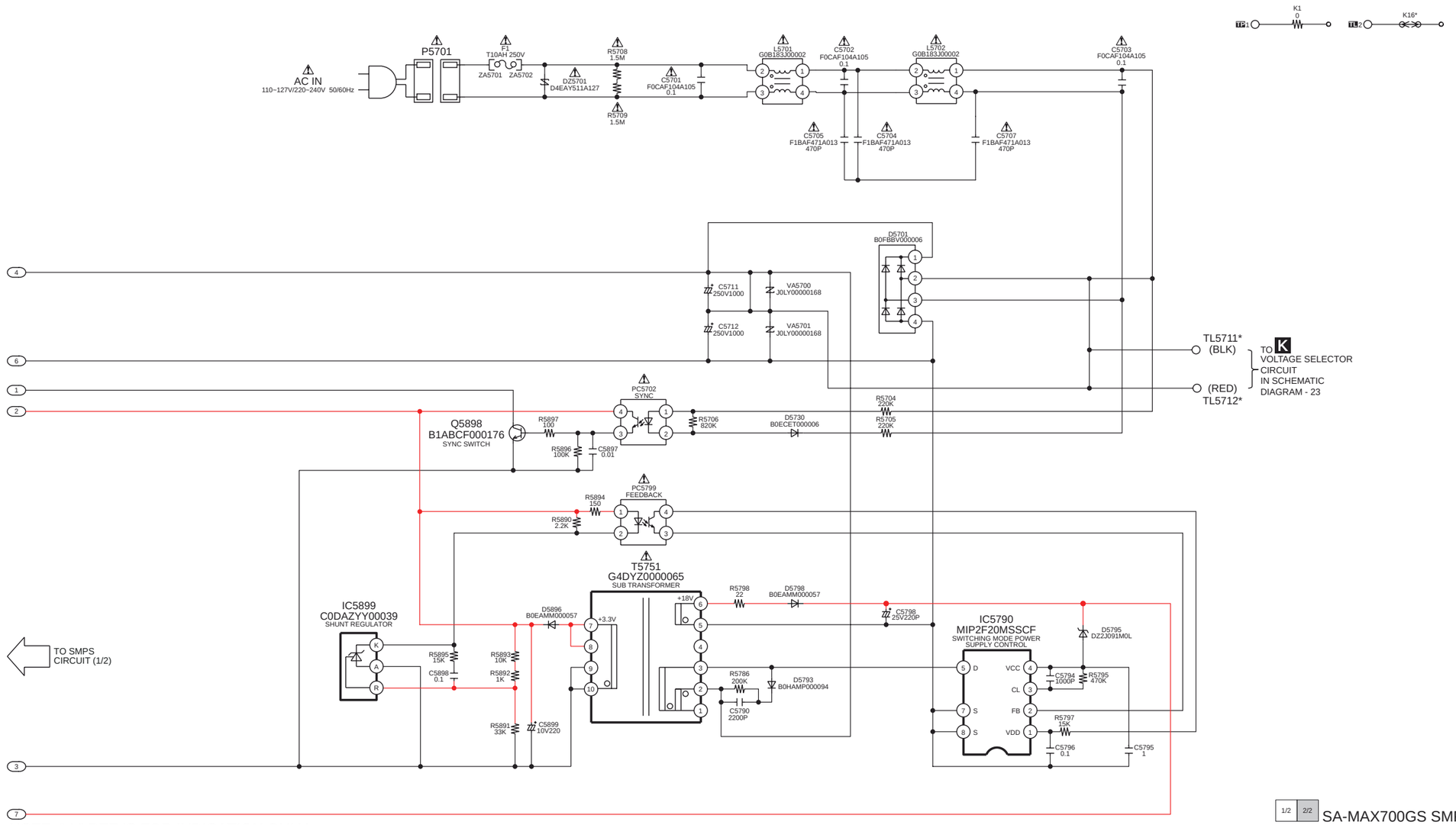

NOTE: " * " REF IS FOR INDICATION ONLY

1/2 2/2 SA-MAX700GS SMPS CIRCUIT

14.9. Voltage Selector, Control Jog LED, Volume Jog LED & CD Interface Circuit

SCHEMATIC DIAGRAM - 23

K VOLTAGE SELECTOR CIRCUIT

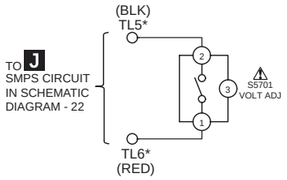

L CONTROL JOG LED CIRCUIT

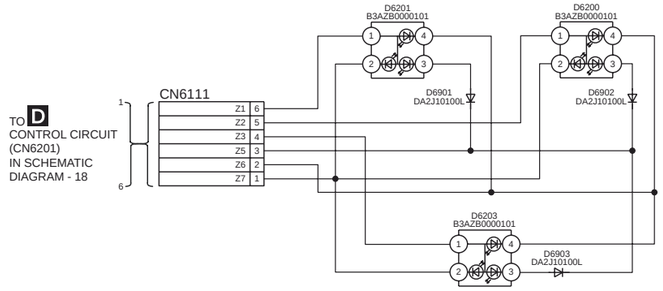

M VOLUME JOG LED CIRCUIT

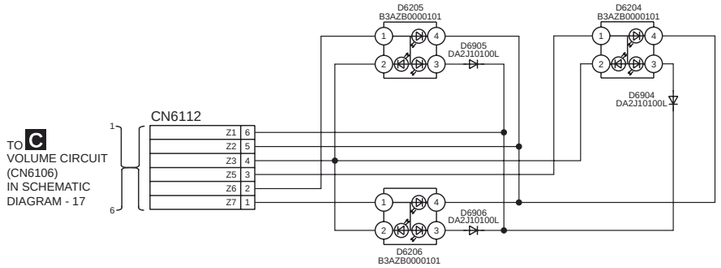

N CD INTERFACE CIRCUIT

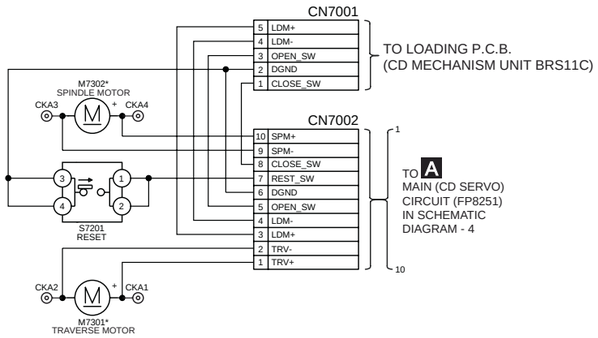

SA-MAX700GS VOLTAGE SELECTOR / CONTROL JOG LED / VOLUME JOG LED / CD INTERFACE CIRCUIT

15 Printed Circuit Board

15.1. Main P.C.B.

A MAIN P.C.B. (REP4882K)

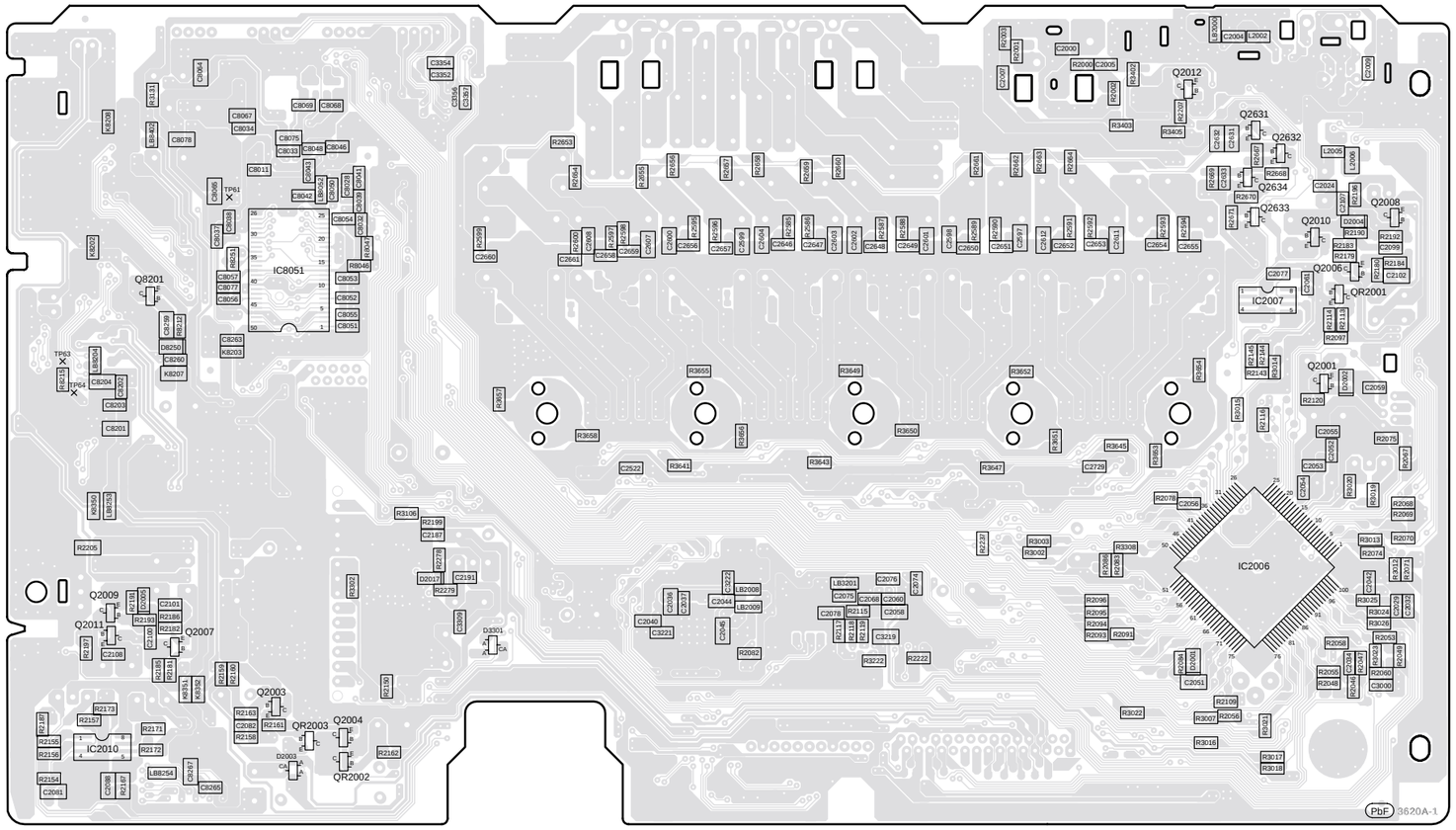

(SIDE A)

SA-MAX700GS
MAIN P.C.B.

A MAIN P.C.B. (REP4882K)

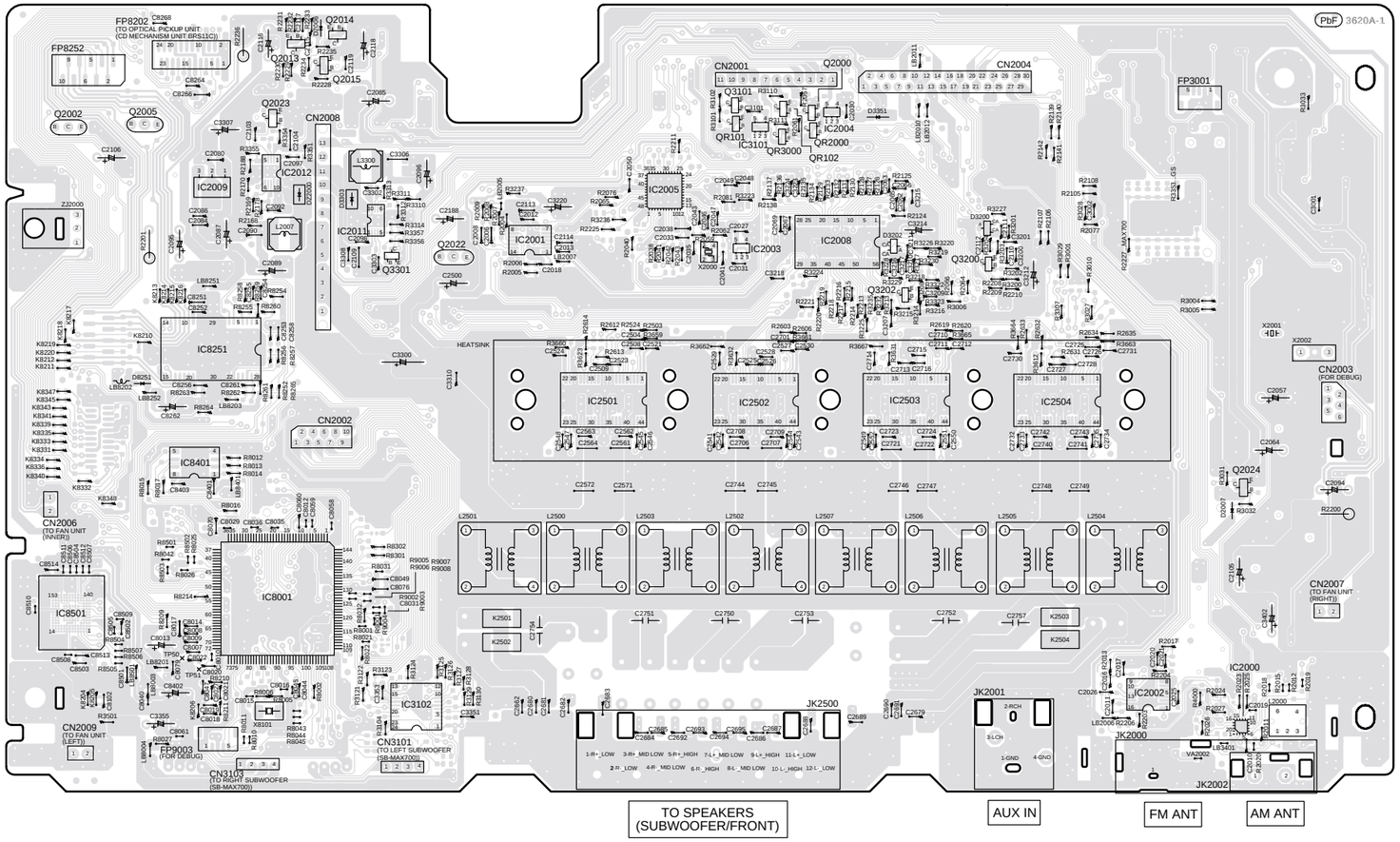

(SIDE B)

SA-MAX700GS
MAIN P.C.B.

15.2. FL Display & Volume P.C.B.

B FL DISPLAY P.C.B. (REP4883AA)

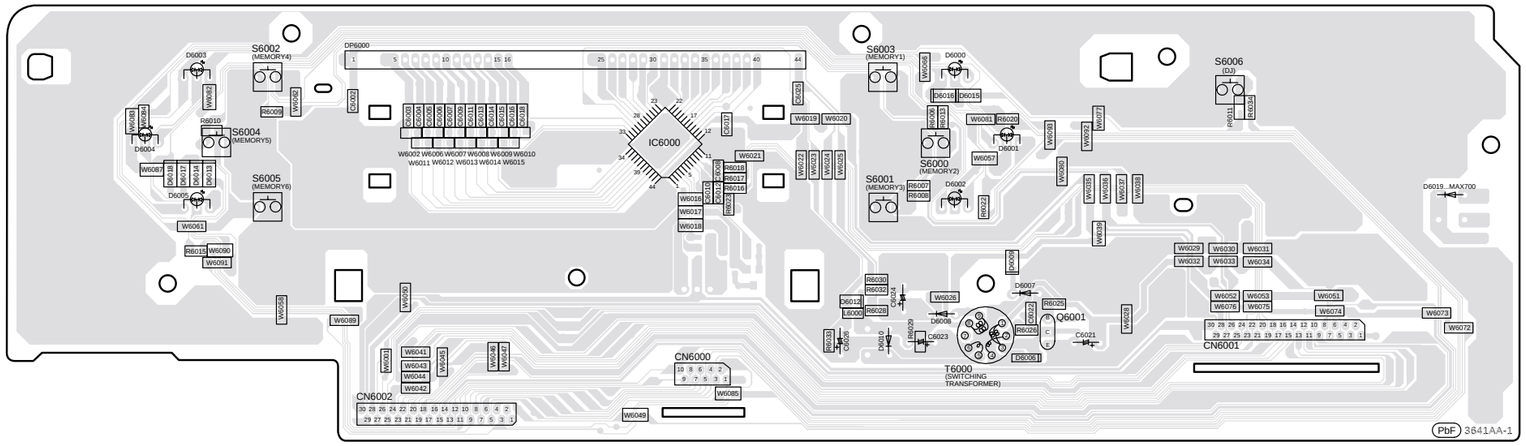

C VOLUME P.C.B. (REP4883AB)

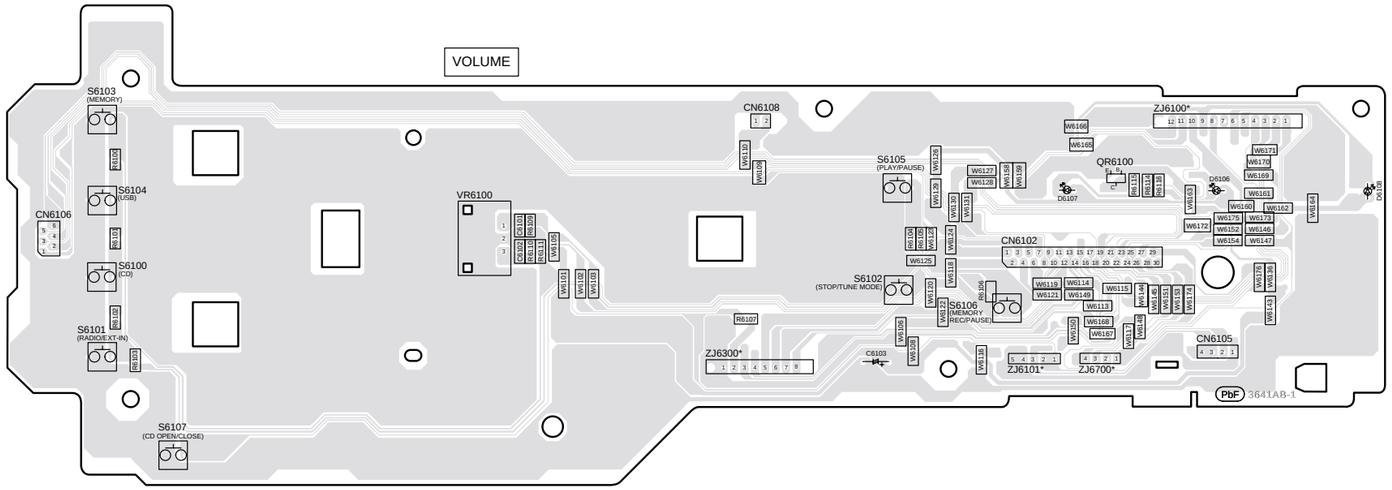

NOTE: " * " REF IS FOR INDICATION ONLY.

SA-MAX700GS
FL DISPLAY / VOLUME P.C.B.

15.3. Control, Mic, USB, Remote Sensor, LED & Illumination Button P.C.B.

D CONTROL P.C.B. (REP4883AC)

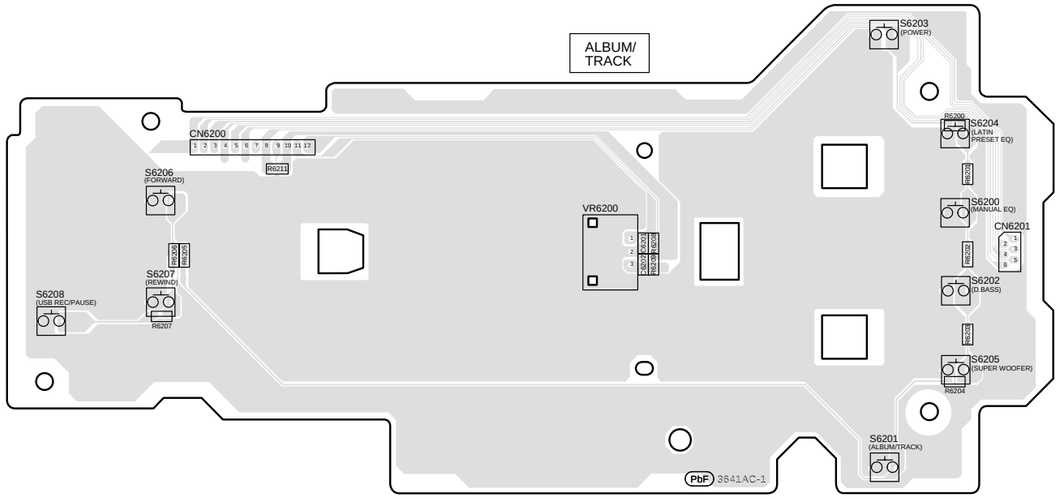

G REMOTE SENSOR P.C.B. (REP4883AF)

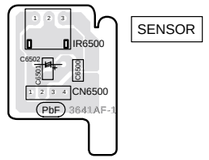

H LED P.C.B. (REP4883AG)

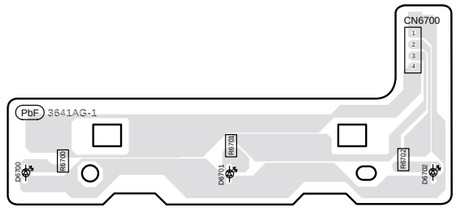

E MIC P.C.B. (REP4883AD)

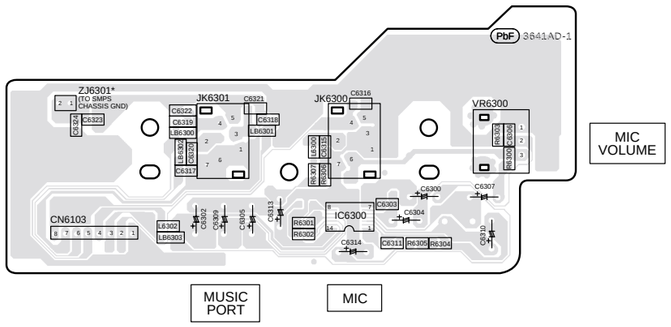

F USB P.C.B. (REP4883AE)

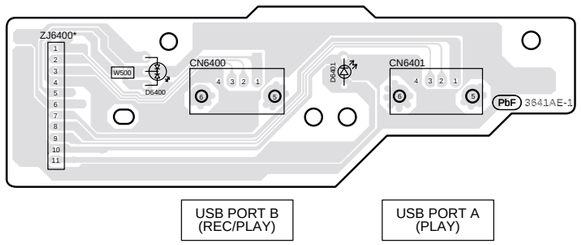

I ILLUMINATION BUTTON P.C.B. (REP4883AH)

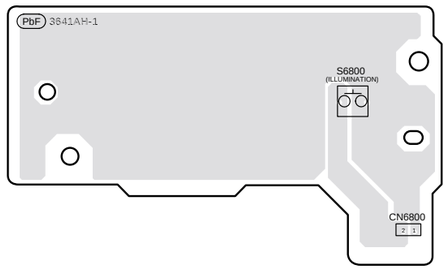

NOTE: " * " REF IS FOR INDICATION ONLY.

SA-MAX700GS
CONTROL / MIC / USB / REMOTE SENSOR / LED / ILLUMINATION BUTTON P.C.B.

15.4. SMPS & Voltage Selector P.C.B.

J SMPS P.C.B. (REP4908H)

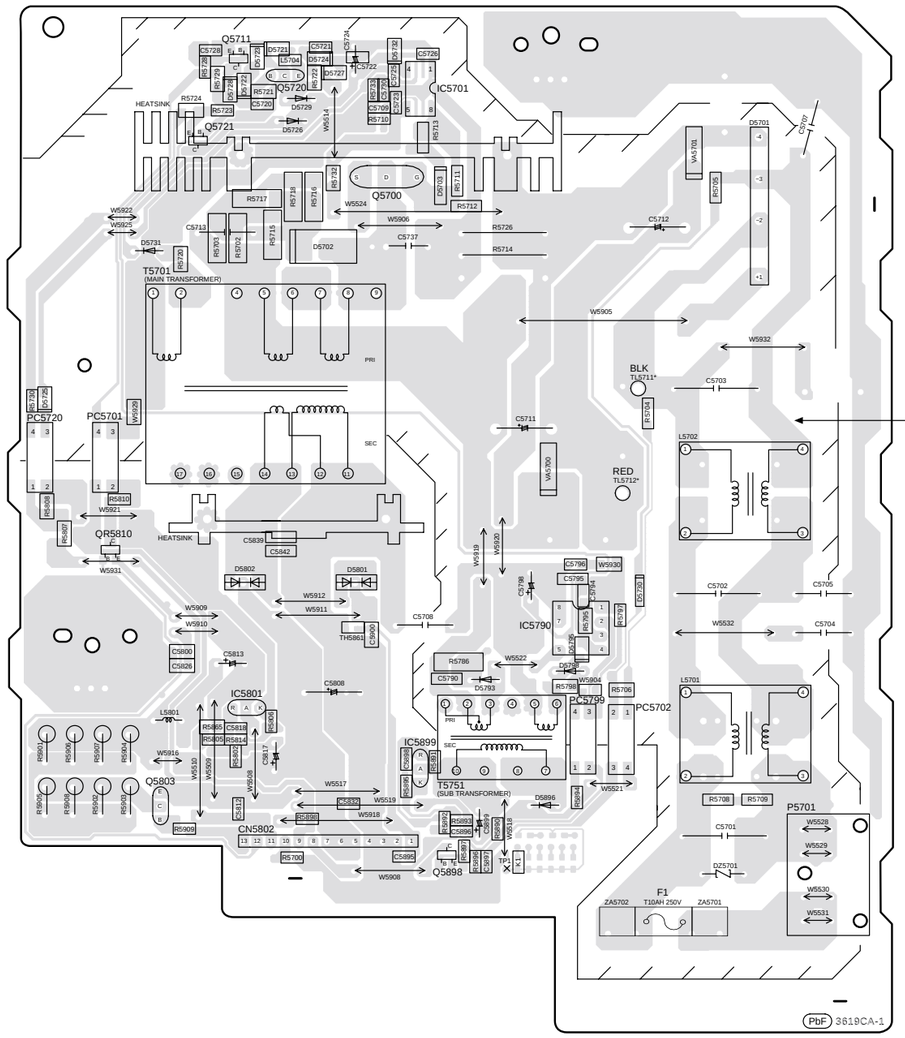

CAUTION
RISK OF ELECTRIC SHOCK
AC VOLTAGE LINE.
PLEASE DO NOT TOUCH THIS P.C.B

AC IN ~
110V-127V
220V-240V
50/60Hz

K VOLTAGE SELECTOR P.C.B. (REP4908H)

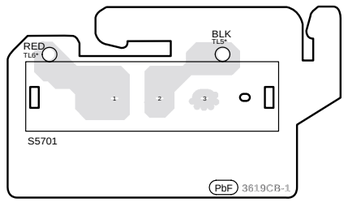

VOLT ADJ

NOTE: " * " REF IS FOR INDICATION ONLY

SA-MAX700GS
SMPS / VOLTAGE SELECTOR P.C.B.

15.5. Control Jog LED, Volume Jog LED & CD Interface P.C.B.

L CONTROL JOG LED P.C.B. (REP4915AA)

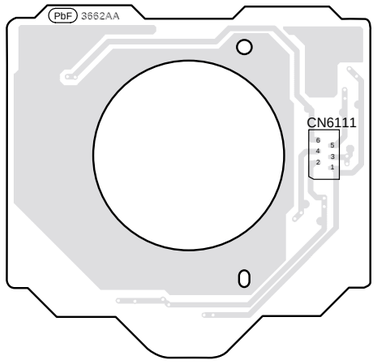

(SIDE A)

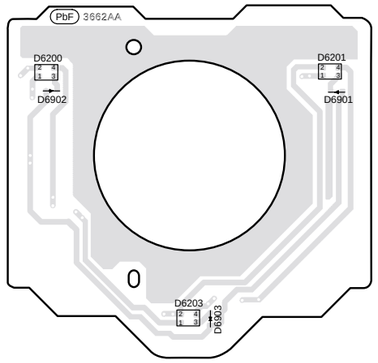

(SIDE B)

N CD INTERFACE P.C.B. (REP4755A)

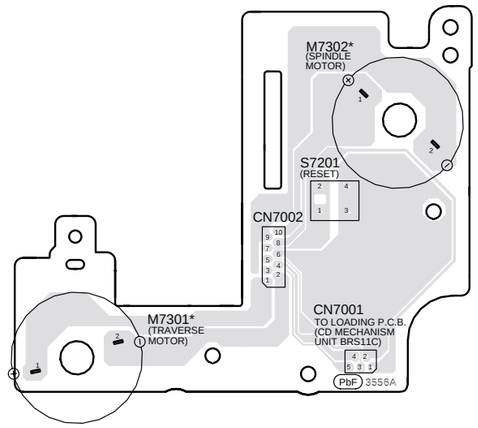

M VOLUME JOG LED P.C.B. (REP4915AB)

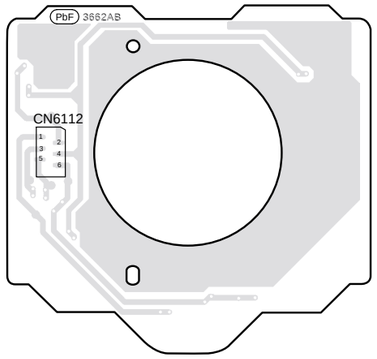

(SIDE A)

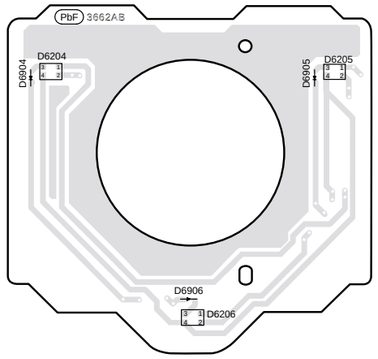

(SIDE B)

NOTE: " * " REF IS FOR INDICATION ONLY

SA-MAX700GS
CONTROL JOG LED / VOLUME JOG LED / CD INTERFACE P.C.B.

16 Appendix Information of Schematic Diagram

16.1. Voltage & Waveform Chart

Note:

- Indication Voltage Values are in standard values for the unit measured by the DC electronic circuit tester (high-impedance) with the chassis taken as standard.
  Therefore, there may exist some errors in voltage values, depending on the internal impedance of the DC circuit tester.
- Circuit voltage and waveform described herein shall be regarded as reference information when probing defect point because it may differ from actual measuring value due to difference of Measuring instrument and its measuring condition and product itself.

16.1.1. Main P.C.B. (1/7)

REF NO.	IC2001																			
MODE	1	2	3	4	5	6	7	8	9	10	11	12	13	14						
CD PLAY	2.4	0	4.7	3.3	0	1.6	1.7	1.6	1.3	0	0	0	2.4	2.4						
STANDBY	2.4	0	4.8	3.3	0	1.6	1.7	1.6	1.5	0	0	0	2.4	2.4						

REF NO.	IC2002																			
MODE	1	2	3	4	5	6	7	8	9	10	11	12	13	14	15	16				
AUX IN	2.8	0	3.0	0	2.0	0	0	0	0	3.0	0	2.8	3.0	2.0	0	12.0				
STANDBY	2.8	0	3.0	0	2.0	0	0	0	0	3.0	0	2.8	3.0	2.0	0	12.0				

REF NO.	IC2003																			
MODE	1	2	3	4	5															
POWER ON	3.3	0	3.3	0	1.8															
STANDBY	3.3	0	3.3	0	1.8															

REF NO.	IC2004																			
MODE	1	2	3	4	5															
POWER ON	3.3	0	3.3	5.1	5.1															
STANDBY	3.3	0	3.3	5.1	5.1															

REF NO.	IC2005																			
MODE	1	2	3	4	5	6	7	8	9	10	11	12	13	14	15	16	17	18	19	20
CD PLAY	1.8	0	0	3.3	0	0	1.6	1.6	1.6	1.8	3.3	0	1.6	1.8	3.3	3.3	3.3	1.8	3.3	0
STANDBY	1.8	0	0	3.3	0	0	1.6	1.6	1.6	1.8	3.3	0	1.6	1.8	3.3	3.3	3.3	1.8	3.3	0

REF NO.	IC2005																			
MODE	21	22	23	24	25	26	27	28	29	30	31	32	33	34	35	36	37	38	39	40
CD PLAY	3.3	3.3	3.3	0	0	12.0	0	0	0	0	12.0	0	0	0	12.0	0	0	3.3	0	0
STANDBY	3.3	3.3	3.3	0	0	12.0	0	0	0	0	12.0	0	0	0	12.0	0	0	3.3	0	0

REF NO.	IC2005																			
MODE	41	42	43	44	45	46	47	48												
CD PLAY	0	0	1.6	1.7	0.8	0	3.3	1.6												
STANDBY	0	0	1.6	1.7	0.8	0	3.3	1.6												

REF NO.	IC2006																			
MODE	1	2	3	4	5	6	7	8	9	10	11	12	13	14	15	16	17	18	19	20
POWER ON	1.3	0.7	1.0	0	0.8	0	0	3.3	3.3	0	0	1.6	1.5	0	1.3	1.7	3.3	1.8	3.3	3.3
STANDBY	1.3	0.7	1.0	0	0.8	0	0	3.3	3.3	0	0	1.6	1.5	0	1.3	1.7	3.3	1.8	3.3	3.3

REF NO.	IC2006																			
MODE	21	22	23	24	25	26	27	28	29	30	31	32	33	34	35	36	37	38	39	40
POWER ON	3.3	0	0	4.8	3.3	3.3	0	3.3	3.3	1.8	0	0	5.0	3.3	3.3	3.3	1.8	3.3	0	3.3
STANDBY	3.3	0	0	4.8	3.3	3.3	0	3.3	3.3	1.8	0	0	5.0	3.3	3.3	3.3	1.8	3.3	0	3.3

REF NO.	IC2006																			
MODE	41	42	43	44	45	46	47	48	49	50	51	52	53	54	55	56	57	58	59	60
POWER ON	3.3	3.3	3.3	0	0	3.3	3.3	3.3	0	3.3	0	0	3.3	3.2	0	0	3.3	3.3	3.3	3.3
STANDBY	3.3	3.3	3.3	0	0	3.3	3.3	3.3	0	3.3	0	0	3.3	3.2	0	0	3.3	3.3	3.3	3.3

SA-MAX700GS MAIN P.C.B.

16.1.2. Main P.C.B. (2/7)

REF NO.	IC2006																			
MODE	61	62	63	64	65	66	67	68	69	70	71	72	73	74	75	76	77	78	79	80
POWER ON	3.3	3.3	0	3.3	3.3	3.3	3.3	3.3	3.3	0	3.3	3.3	3.3	3.3	3.3	3.3	3.3	3.3	0	3.3
STANDBY	3.3	3.3	0	3.3	3.3	3.3	3.3	3.3	3.3	0	3.3	3.3	3.3	3.3	3.3	3.3	3.3	3.3	0	3.3

REF NO.	IC2006																			
MODE	81	82	83	84	85	86	87	88	89	90	91	92	93	94	95	96	97	98	99	100
POWER ON	3.3	3.3	3.3	3.3	0	3.3	0	1.6	3.3	3.3	0	0.4	0.6	3.3	1.7	0	2.6	3.3	3.0	3.3
STANDBY	3.3	3.3	3.3	3.3	0	3.3	0	1.6	3.3	3.3	0	0.4	0.6	3.3	1.7	0	2.6	3.3	3.0	3.3

REF NO.	IC2007																			
MODE	1	2	3	4	5	6	7	8												
POWER ON	0	0	0	0	3.3	3.3	0	3.3												
STANDBY	0	0	0	0	3.3	3.3	0	3.3												

REF NO.	IC2008																			
MODE	1	2	3	4	5	6	7	8	9	10	11	12	13	14	15	16	17	18	19	20
CD PLAY	0	0	0	0	0	0.6	1.1	1.8	3.3	0	1.6	1.0	0	3.3	3.3	3.3	3.3	3.3	3.3	3.3
STANDBY	0	0	0	0	0	0.7	1.1	1.8	3.3	0	1.6	1.0	0	3.3	3.3	3.3	3.3	3.3	3.3	3.3

REF NO.	IC2008																			
MODE	21	22	23	24	25	26	27	28	29	30	31	32	33	34	35	36	37	38	39	40
CD PLAY	3.3	1.7	1.6	0.8	0	0	1.2	1.8	1.2	1.6	1.6	0	0	3.3	3.3	0	3.3	1.6	1.6	1.6
STANDBY	3.3	1.7	1.6	0.8	0	0	1.2	1.8	1.2	1.6	1.6	0	0	3.3	3.3	0	3.3	1.6	1.6	1.6

REF NO.	IC2008																			
MODE	41	42	43	44	45	46	47	48	49	50	51	52	53	54	55	56				
CD PLAY	1.6	1.6	1.6	1.6	1.6	1.6	0	1.6	1.6	3.3	0	1.8	0	1.6	0	1.4				
STANDBY	1.6	1.6	1.6	1.6	1.6	1.6	0	1.6	1.6	3.3	0	1.8	0	1.6	0	1.4				

REF NO.	IC2009																			
MODE	1	2	3																	
POWER ON	0	3.3	5.4																	
STANDBY	0	3.3	5.4																	

REF NO.	IC2010																			
MODE	1	2	3	4	5	6	7	8												
POWER ON	8.5	1.6	1.6	0	1.6	1.6	8.8	15.3												
STANDBY	8.5	1.6	1.6	0	1.6	1.6	8.8	15.3												

REF NO.	IC2011																			
MODE	1	2	3	4	5	6	7	8	9	10										
POWER ON	18.7	37.4	0	2.0	0.5	0	0.8	0.9	0	12.6										
STANDBY	18.7	37.4	0	2.2	0.5	0	0.8	0.8	0	12.6										

REF NO.	IC2012																			
MODE	1	2	3	4	5	6	7	8	9	10										
POWER ON	11.0	35.5	0	2.1	0.5	0	0.8	0	0	5.4										
STANDBY	11.0	35.5	0	2.1	0.5	0	0.8	0	0	5.4										

SA-MAX700GS MAIN P.C.B.

16.1.3. Main P.C.B. (3/7)

REF NO.	IC2501																			
MODE	1	2	3	4	5	6	7	8	9	10	11	12	13	14	15	16	17	18	19	20
CD PLAY	11.7	11.7	1.2	3.3	1.6	1.6	3.1	3.3	0	0	0	0	7.8	1.6	1.6	1.6	3.3	3.3	0	0
STANDBY	11.7	11.7	1.2	3.3	1.6	1.6	3.1	3.3	0	0	0	0	7.8	1.6	1.6	1.6	3.3	3.3	0	0

REF NO.	IC2501																			
MODE	21	22	23	24	25	26	27	28	29	30	31	32	33	34	35	36	37	38	39	40
CD PLAY	3.3	11.8	29.0	29.0	0	0	18.1	18.1	37.4	37.4	37.4	18.1	0	0	18.1	37.4	37.4	37.4	18.1	18.1
STANDBY	3.3	11.8	29.0	29.0	0	0	18.1	18.1	37.4	37.4	37.4	18.0	0	0	18.1	37.4	37.4	37.4	18.1	18.1

REF NO.	IC2501																			
MODE	41	42	43	44																
CD PLAY	0	0	29.0	29.0																
STANDBY	0	0	29.0	29.0																

REF NO.	IC2502																			
MODE	1	2	3	4	5	6	7	8	9	10	11	12	13	14	15	16	17	18	19	20
CD PLAY	11.7	11.7	1.2	3.3	1.6	1.6	3.1	3.3	0	0	0	0	7.8	1.6	1.6	1.6	3.3	3.3	0	0
STANDBY	11.7	11.7	1.2	3.3	1.6	1.6	3.1	3.3	0	0	0	0	7.8	1.6	1.6	1.6	3.3	3.3	0	0

REF NO.	IC2502																			
MODE	21	22	23	24	25	26	27	28	29	30	31	32	33	34	35	36	37	38	39	40
CD PLAY	3.3	11.8	29.0	29.0	0	0	18.1	18.1	37.4	37.4	37.4	18.1	0	0	18.1	37.4	37.4	37.4	18.1	18.1
STANDBY	3.3	11.8	29.0	29.0	0	0	18.1	18.1	37.4	37.4	37.4	18.0	0	0	18.1	37.4	37.4	37.4	18.1	18.1

REF NO.	IC2502																			
MODE	41	42	43	44																
CD PLAY	0	0	29.0	29.0																
STANDBY	0	0	29.0	29.0																

REF NO.	IC2503																			
MODE	1	2	3	4	5	6	7	8	9	10	11	12	13	14	15	16	17	18	19	20
CD PLAY	11.7	11.7	1.2	3.3	1.6	1.6	3.1	3.3	0	0	0	0	7.8	1.6	1.6	1.6	3.3	3.3	0	0
STANDBY	11.7	11.7	1.2	3.3	1.6	1.6	3.1	3.3	0	0	0	0	7.8	1.6	1.6	1.6	3.3	3.3	0	0

REF NO.	IC2503																			
MODE	21	22	23	24	25	26	27	28	29	30	31	32	33	34	35	36	37	38	39	40
CD PLAY	3.3	11.8	29.0	29.0	0	0	18.1	18.1	37.4	37.4	37.4	18.1	0	0	18.1	37.4	37.4	37.4	18.1	18.1
STANDBY	3.3	11.8	29.0	29.0	0	0	18.1	18.1	37.4	37.4	37.4	18.1	0	0	18.1	37.4	37.4	37.4	18.1	18.1

REF NO.	IC2503																			
MODE	41	42	43	44																
CD PLAY	0	0	29.0	29.0																
STANDBY	0	0	29.0	29.0																

REF NO.	IC2504																			
MODE	1	2	3	4	5	6	7	8	9	10	11	12	13	14	15	16	17	18	19	20
CD PLAY	11.7	11.7	1.2	3.3	1.6	1.6	3.1	3.3	0	0	0	0	7.8	1.6	1.6	1.6	3.3	3.3	0	0
STANDBY	11.7	11.7	1.2	3.3	1.6	1.6	3.1	3.3	0	0	0	0	7.8	1.6	1.6	1.6	3.3	3.3	0	0

SA-MAX700GS MAIN P.C.B.

16.1.4. Main P.C.B. (4/7)

REF NO.	IC2504																			
MODE	21	22	23	24	25	26	27	28	29	30	31	32	33	34	35	36	37	38	39	40
CD PLAY	3.3	11.8	29.0	29.0	0	0	18.1	18.1	37.4	37.4	37.4	18.1	0	0	18.1	37.4	37.4	37.4	18.1	18.1
STANDBY	3.3	11.8	29.0	29.0	0	0	18.1	18.1	37.4	37.4	37.4	18.1	0	0	18.1	37.4	37.4	37.4	18.1	18.1

REF NO.	IC2504																			
MODE	41	42	43	44																
CD PLAY	0	0	29.0	29.0																
STANDBY	0	0	29.0	29.0																

REF NO.	IC3101																			
MODE	1	2	3	4	5															
POWER ON	3.3	0	3.3	5.1	5.1															
STANDBY	3.3	0	3.3	5.1	5.1															

REF NO.	IC3102																			
MODE	1	2	3	4	5	6	7	8	9	10	11	12	13	14	15	16	17	18	19	20
POWER ON	3.3	3.0	3.3	0	2.2	1.5	5.2	1.6	0	2.8	2.8	3.0	0	2.9	0	2.7	5.2	2.8	3.0	0.4
STANDBY	3.3	3.0	3.3	0	2.2	1.6	5.2	1.6	0	2.8	2.8	3.0	0	3.0	0	2.7	5.2	2.8	3.0	0.3

REF NO.	IC3102																			
MODE	21	22	23	24																
POWER ON	0	3.3	0	0.3																
STANDBY	0	3.3	0	0.3																

REF NO.	IC8001																			
MODE	1	2	3	4	5	6	7	8	9	10	11	12	13	14	15	16	17	18	19	20
CD PLAY	3.2	1.3	1.1	1.2	1.2	1.3	3.2	1.2	0	3.2	3.2	3.2	0	0	0	0	0	3.2	0	0
STANDBY	3.2	1.3	1.1	1.2	1.2	1.3	3.2	1.2	0	3.2	3.2	3.2	0	0	0	0	0	3.2	0	0

REF NO.	IC8001																			
MODE	21	22	23	24	25	26	27	28	29	30	31	32	33	34	35	36	37	38	39	40
CD PLAY	0	0	0	0	3.2	3.2	1.3	3.2	3.2	3.2	3.2	3.2	0.6	3.0	3.2	0	1.2	1.2	1.2	0.8
STANDBY	0	0	0	0	3.2	3.2	1.3	3.2	3.2	3.2	3.2	3.2	0.6	3.0	3.2	0	1.2	1.2	1.2	0.8

REF NO.	IC8001																			
MODE	41	42	43	44	45	46	47	48	49	50	51	52	53	54	55	56	57	58	59	60
CD PLAY	0	0	0.8	0.8	3.2	0	1.2	1.7	1.7	1.5	0	1.5	1.6	3.3	1.6	1.6	1.9	0	1.7	1.7
STANDBY	0	0	0.8	0.8	3.2	0	1.2	1.7	1.7	1.5	0	1.5	1.6	3.3	1.6	1.6	1.9	0	1.7	1.7

REF NO.	IC8001																			
MODE	61	62	63	64	65	66	67	68	69	70	71	72	73	74	75	76	77	78	79	80
CD PLAY	1.7	3.2	0	3.3	3.2	3.2	0.8	1.0	0	1.0	1.2	1.6	1.6	1.4	1.4	0.4	0	3.3	3.3	0
STANDBY	1.7	3.2	0	3.3	3.2	3.2	0.8	1.0	0	1.0	1.2	1.6	1.6	1.4	1.4	0.4	0	3.3	3.3	0

REF NO.	IC8001																			
MODE	81	82	83	84	85	86	87	88	89	90	91	92	93	94	95	96	97	98	99	100
CD PLAY	0	0	0	0	0	0	1.2	3.3	1.2	1.2	0	3.3	0	0	0	1.6	3.2	0	0	0
STANDBY	0	0	0	0	0	0	1.2	3.3	1.2	1.2	0	3.3	0	0	0	1.6	3.2	0	0	0

SA-MAX700GS MAIN P.C.B.

16.1.5. Main P.C.B. (5/7)

REF NO.	IC8001																			
MODE	101	102	103	104	105	106	107	108	109	110	111	112	113	114	115	116	117	118	119	120
CD PLAY	1.2	0	3.2	3.1	3.0	3.2	3.1	3.1	0	0	0	3.2	3.1	3.0	1.6	1.4	0.8	1.0	3.2	3.2
STANDBY	1.2	0	3.2	3.1	3.0	3.2	3.1	3.1	0	0	0	3.2	3.1	3.0	1.6	1.4	0.8	1.0	3.2	3.2

REF NO.	IC8001																			
MODE	121	122	123	124	125	126	127	128	129	130	131	132	133	134	135	136	137	138	139	140
CD PLAY	1.2	0	3.0	3.2	3.0	0	0	3.2	3.0	0	3.2	0	0	3.2	0	1.6	1.6	1.6	0	0
STANDBY	1.2	0	3.0	3.2	3.0	0	0	3.2	3.0	0	3.2	0	0	3.2	0	1.6	1.6	1.6	0	0

REF NO.	IC8001																			
MODE	141	142	143	144																
CD PLAY	0	1.0	1.1	1.1																
STANDBY	0	1.0	1.1	1.1																

REF NO.	IC8051																			
MODE	1	2	3	4	5	6	7	8	9	10	11	12	13	14	15	16	17	18	19	20
CD PLAY	3.3	0	1.3	0	0.6	1.2	3.3	1.4	1.3	0	1.4	0.8	3.3	3.2	3.3	3.2	3.2	0	0	0
STANDBY	3.3	0	0	0	0	0	3.3	0	0	0	0	0	3.3	3.3	3.3	3.3	3.3	0	0	0

REF NO.	IC8051																			
MODE	21	22	23	24	25	26	27	28	29	30	31	32	33	34	35	36	37	38	39	40
CD PLAY	0	1.8	1.8	1.6	3.3	0	1.7	1.7	1.7	1.7	3.3	3.3	0	3.3	1.4	3.3	0	3.3	0.5	0.6
STANDBY	0	0	3.3	0	3.3	0	3.3	3.3	0	3.3	3.3	3.3	0	3.3	1.4	3.3	0	3.3	0	0

REF NO.	IC8051																			
MODE	41	42	43	44	45	46	47	48	49	50										
CD PLAY	0	0	0.6	3.3	1.3	0.6	0	0.6	1.3	0										
STANDBY	0	0	0	3.3	0	0	0	0	0	0										

REF NO.	IC8251																			
MODE	1	2	3	4	5	6	7	8	9	10	11	12	13	14	15	16	17	18	19	20
CD PLAY	1.7	0	0	0	0	3.3	3.3	5.6	0	0	2.9	2.9	2.7	3.0	2.8	2.9	2.3	3.3	5.6	0
STANDBY	1.7	0	0	0	0	3.3	3.3	5.6	0	0	2.9	2.9	2.9	2.9	2.9	2.9	2.9	2.8	5.6	0

REF NO.	IC8251																			
MODE	21	22	23	24	25	26	27	28												
CD PLAY	1.5	0	1.5	0	0	1.7	1.7	3.3												
STANDBY	1.5	0	1.7	0	0	1.7	1.7	3.3												

REF NO.	IC8401																			
MODE	1	2	3	4	5	6	7	8												
CD PLAY	1.6	2.4	3.3	0	3.2	0.9	3.3	3.3												
STANDBY	2.3	2.8	3.3	0	3.2	0.5	3.3	3.3												

REF NO.	IC8501																			
MODE	1	2	3	4	5	6	7	8	9	10	11	12	13	14	15	16	17	18	19	20
CD PLAY	0	1.0	1.2	1.2	1.2	0	0	3.3	0	0	0	0	0	0	0	1.2	0	0	0	0
STANDBY	0	1.0	1.2	1.2	1.2	0	0	3.3	0	0	0	0	0	0	0	1.2	0	0	0	0

SA-MAX700GS MAIN P.C.B.

16.1.6. Main P.C.B. (6/7)

REF NO.	IC8001																			
MODE	101	102	103	104	105	106	107	108	109	110	111	112	113	114	115	116	117	118	119	120
CD PLAY	1.2	0	3.2	3.1	3.0	3.2	3.1	3.1	0	0	0	3.2	3.1	3.0	1.6	1.4	0.8	1.0	3.2	3.2
STANDBY	1.2	0	3.2	3.1	3.0	3.2	3.1	3.1	0	0	0	3.2	3.1	3.0	1.6	1.4	0.8	1.0	3.2	3.2

REF NO.	IC8001																			
MODE	121	122	123	124	125	126	127	128	129	130	131	132	133	134	135	136	137	138	139	140
CD PLAY	1.2	0	3.0	3.2	3.0	0	0	3.2	3.0	0	3.2	0	0	3.2	0	1.6	1.6	1.6	0	0
STANDBY	1.2	0	3.0	3.2	3.0	0	0	3.2	3.0	0	3.2	0	0	3.2	0	1.6	1.6	1.6	0	0

REF NO.	IC8001																			
MODE	141	142	143	144																
CD PLAY	0	1.0	1.1	1.1																
STANDBY	0	1.0	1.1	1.1																

REF NO.	IC8051																			
MODE	1	2	3	4	5	6	7	8	9	10	11	12	13	14	15	16	17	18	19	20
CD PLAY	3.3	0	1.3	0	0.6	1.2	3.3	1.4	1.3	0	1.4	0.8	3.3	3.2	3.3	3.2	3.2	0	0	0
STANDBY	3.3	0	0	0	0	0	3.3	0	0	0	0	0	3.3	3.3	3.3	3.3	3.3	0	0	0

REF NO.	IC8051																			
MODE	21	22	23	24	25	26	27	28	29	30	31	32	33	34	35	36	37	38	39	40
CD PLAY	0	1.8	1.8	1.6	3.3	0	1.7	1.7	1.7	1.7	3.3	3.3	0	3.3	1.4	3.3	0	3.3	0.5	0.6
STANDBY	0	0	3.3	0	3.3	0	3.3	3.3	0	3.3	3.3	3.3	0	3.3	1.4	3.3	0	3.3	0	0

REF NO.	IC8051																			
MODE	41	42	43	44	45	46	47	48	49	50										
CD PLAY	0	0	0.6	3.3	1.3	0.6	0	0.6	1.3	0										
STANDBY	0	0	0	3.3	0	0	0	0	0	0										

REF NO.	IC8251																			
MODE	1	2	3	4	5	6	7	8	9	10	11	12	13	14	15	16	17	18	19	20
CD PLAY	1.7	0	0	0	0	3.3	3.3	5.6	0	0	2.9	2.9	2.7	3.0	2.8	2.9	2.3	3.3	5.6	0
STANDBY	1.7	0	0	0	0	3.3	3.3	5.6	0	0	2.9	2.9	2.9	2.9	2.9	2.9	2.9	2.8	5.6	0

REF NO.	IC8251																			
MODE	21	22	23	24	25	26	27	28												
CD PLAY	1.5	0	1.5	0	0	1.7	1.7	3.3												
STANDBY	1.5	0	1.7	0	0	1.7	1.7	3.3												

REF NO.	IC8401																			
MODE	1	2	3	4	5	6	7	8												
CD PLAY	1.6	2.4	3.3	0	3.2	0.9	3.3	3.3												
STANDBY	2.3	2.8	3.3	0	3.2	0.5	3.3	3.3												

REF NO.	IC8501																			
MODE	1	2	3	4	5	6	7	8	9	10	11	12	13	14	15	16	17	18	19	20
CD PLAY	0	1.0	1.2	1.2	1.2	0	0	3.3	0	0	0	0	0	0	0	1.2	0	0	0	0
STANDBY	0	1.0	1.2	1.2	1.2	0	0	3.3	0	0	0	0	0	0	0	1.2	0	0	0	0

SA-MAX700GS MAIN P.C.B.

16.1.7. Main P.C.B. (7/7)

REF NO.	Q2015				Q2022				Q2024				Q2631				Q2632			
MODE	E	C	B		E	C	B		E	C	B		E	C	B		E	C	B	
POWER ON	0	3.3	0		12.3	15.4	12.9		0	1.8	30.0		18.1	37.4	18.1		18.1	37.4	18.1	
STANDBY	0	3.3	0		12.3	15.4	12.9		0	1.8	30.0		18.1	37.4	18.1		18.1	37.4	18.1	

REF NO.	Q2633				Q2634				Q3301				QR2001				QR2002			
MODE	E	C	B		E	C	B		E	C	B		E	C	B		E	C	B	
POWER ON	0	3.3	0		37.4	0	37.3		0	0.5	0		0	0	3.3		0	3.3	0	
STANDBY	0	3.3	0		37.4	0	37.3		0	0.5	0		0	0	3.3		0	3.3	0	

REF NO.	QR2003																			
MODE	E	C	B																	
POWER ON	0	3.3	0																	
STANDBY	0	3.3	0																	

REF NO.	Q2023				Q3101				Q3200				Q3202				Q8201			
MODE	E	C	B		E	C	B		E	C	B		E	C	B		E	C	B	
CD PLAY	0	0.6	0		0	5.1	5.3		0	12.0	1.0		0	12.0	1.2		3.1	2.1	2.4	
STANDBY	0	0.6	0		0	5.1	5.3		0	12.0	1.0		0	12.0	1.2		3.3	0	3.3	

REF NO.	QR101				QR102				QR2000				QR3000							
MODE	E	C	B		E	C	B		E	C	B		E	C	B					
CD PLAY	0	5.4	0		5.1	0	5.4		0	5.1	0		0	5.3	0					
STANDBY	0	5.4	0		5.1	0	5.4		0	5.1	0		0	5.3	0					

SA-MAX700GS MAIN P.C.B.

16.1.8. FL Display P.C.B.

REF NO.	IC6000																			
MODE	1	2	3	4	5	6	7	8	9	10	11	12	13	14	15	16	17	18	19	20
POWER ON	0	0	0	0	1.9	0	1.3	0	0.7	0	0	0	3.3	-16.1	-14.1	-21.5	-21.5	-19.7	-21.5	-17.8
STANDBY	0	0	0	0	1.9	0	1.3	0	0.7	0	0	0	3.3	-16.1	-14.1	-21.5	-21.5	-19.7	-21.5	-17.8

REF NO.	IC6000																			
MODE	21	22	23	24	25	26	27	28	29	30	31	32	33	34	35	36	37	38	39	40
POWER ON	-19.5	-21.5	-23.4	-21.5	-15.9	-19.6	-17.8	-21.5	-21.5	-21.5	-21.5	-21.5	-21.5	-21.5	-21.5	-21.5	-21.5	-21.5	-21.5	-21.5
STANDBY	-19.5	-21.5	-23.4	-21.5	-15.9	-19.6	-17.8	-21.5	-21.5	-21.5	-21.5	-21.5	-21.5	-21.5	-21.5	-21.5	-21.5	-21.5	-21.5	-21.5

REF NO.	IC6000																			
MODE	41	42	43	44																
POWER ON	-21.6	-21.9	3.3	0																
STANDBY	-21.6	-21.9	3.3	0																

REF NO.	Q6001																			
MODE	E	C	B																	
POWER ON	0	15.1	0																	
STANDBY	0	15.1	0																	

SA-MAX700GS FL DISPLAY P.C.B.

16.1.9. Volume P.C.B.

REF NO.	QR6100																			
MODE	E	C	B																	
POWER ON	0	0	3.3																	
STANDBY	0	0	3.3																	

SA-MAX700GS VOLUME P.C.B.

16.1.10. Mic P.C.B.

REF NO.	IC6300																			
MODE	1	2	3	4	5	6	7	8	9	10	11	12	13	14						
POWER ON	0	0	6.0	6.0	6.0	6.0	6.0	0	12.1	6.0	0	0.9	12.1	6.0						
STANDBY	0	0	6.0	6.0	6.0	6.0	6.0	0	12.1	6.0	0	0.9	12.1	6.0						

SA-MAX700GS MIC P.C.B.

16.1.11. SMPS P.C.B.

REF NO.	IC5701																			
MODE	1	2	3	4	5	6	7	8												
POWER ON	0	18.9	0	1.6	0	7.0	0	0												
STANDBY	0	18.9	0	1.6	0	7.0	0	0												

REF NO.	IC5790																			
MODE	1	2	3	4	5	6	7	8												
POWER ON	5.8	0.6	2.3	0.2	163.0	0	0	0												
STANDBY	5.8	0.6	2.3	0.2	163.0	0	0	0												

REF NO.	IC5801																			
MODE	K	A	R																	
POWER ON	33.6	0	2.5																	
STANDBY	33.6	0	2.5																	

REF NO.	IC5899																			
MODE	K	A	R																	
POWER ON	2.3	0	2.5																	
STANDBY	2.4	0	2.5																	

REF NO.	Q5700				Q5711				Q5720				Q5721				Q5803			
MODE	S	D	G		E	C	B		E	C	B		E	C	B		E	C	B	
POWER ON	0	0	0		0	14.0	0		4.8	5.7	5.1		20.0	19.5	18.9		0	37.4	0	
STANDBY	0	0	0		0	14.0	0		4.7	5.7	5.1		20.0	19.5	18.9		0	37.4	0	

REF NO.	Q5898				QR5810															
MODE	E	C	B		E	C	B													
POWER ON	0	1.6	0.4		0	0	3.3													
STANDBY	0	1.6	0.4		0	0	3.3													

SA-MAX700GS SMPS P.C.B.

16.1.12. Waveform Table

WF No. IC2000-2,4,13 (TUNER) 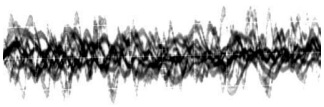 0.1Vp-p(200usec/div)	WF No. IC2005-13 (PLAY) 1.6Vp-p(20nsec/div)	WF No. IC2005-14 (PLAY) 4.8Vp-p(20nsec/div)	WF No. IC2006-12 (PLAY) 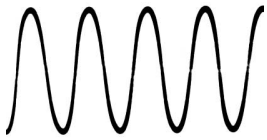 3.8Vp-p(50nsec/div)
WF No. IC2006-13 (PLAY) 4Vp-p(50nsec/div)	WF No. IC2006-15 (PLAY) 2Vp-p(10usec/div)	WF No. IC2006-16 (PLAY) 3.8Vp-p(10usec/div)	WF No. IC2008-24 (PLAY) 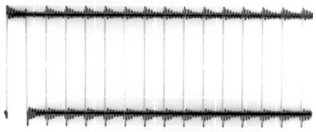 1.8Vp-p(50usec/div)
WF No. IC2008-27 (PLAY) 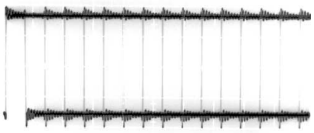 3.2Vp-p(1usec/div)	WF No. IC2008-38,39,40,41,42, 43,44,45,46,48, 49 (PLAY) 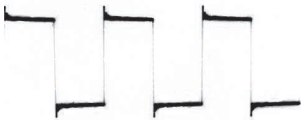 5.2Vp-p(1usec/div)	WF No. IC2501-5,6,14,15 (PLAY) 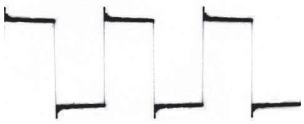 1.6Vp-p(1usec/div)	WF No. IC2501-27,28,32,35 (PLAY) 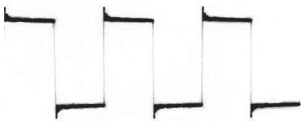 28Vp-p(500nsec/div)
WF No. IC2501-39,40 (PLAY) 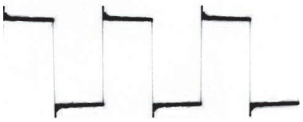 28Vp-p(1usec/div)	WF No. IC2502-5,6,14,15 (PLAY) 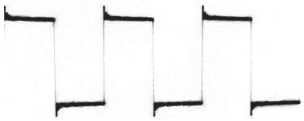 1.6Vp-p(1usec/div)	WF No. IC2502-27,28,32,35 (PLAY) 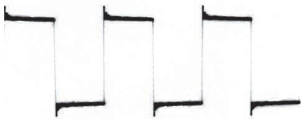 28Vp-p(500nsec/div)	WF No. IC2502-39,40 (PLAY) 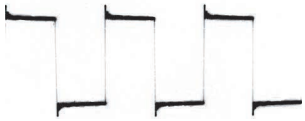 28Vp-p(1usec/div)
WF No. IC2503-5,6,14,15 (PLAY) 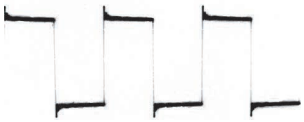 1.6Vp-p(1usec/div)	WF No. IC2503-27,28,32,35 (PLAY) 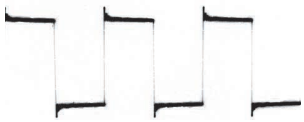 28Vp-p(500nsec/div)	WF No. IC2503-39,40 (PLAY) 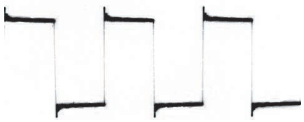 28Vp-p(1usec/div)	WF No. IC2504-5,6,14,15 (PLAY) 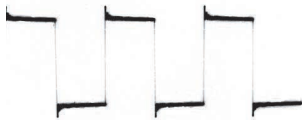 1.6Vp-p(1usec/div)

WF No. IC2504-27,28,32,35 (PLAY)	WF No. IC2504-39,40 (PLAY)	WF No. IC6000-5 (PLAY)
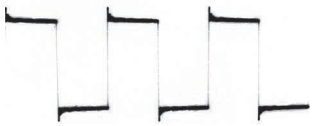	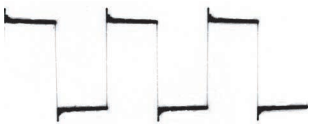	
28Vp-p(500nsec/div)	28Vp-p(1usec/div)	1.5Vp-p(2usec/div)

17 Exploded View and Replacement Parts List

17.1. Exploded View and Mechanical replacement Part List

17.1.1. Cabinet Parts Location

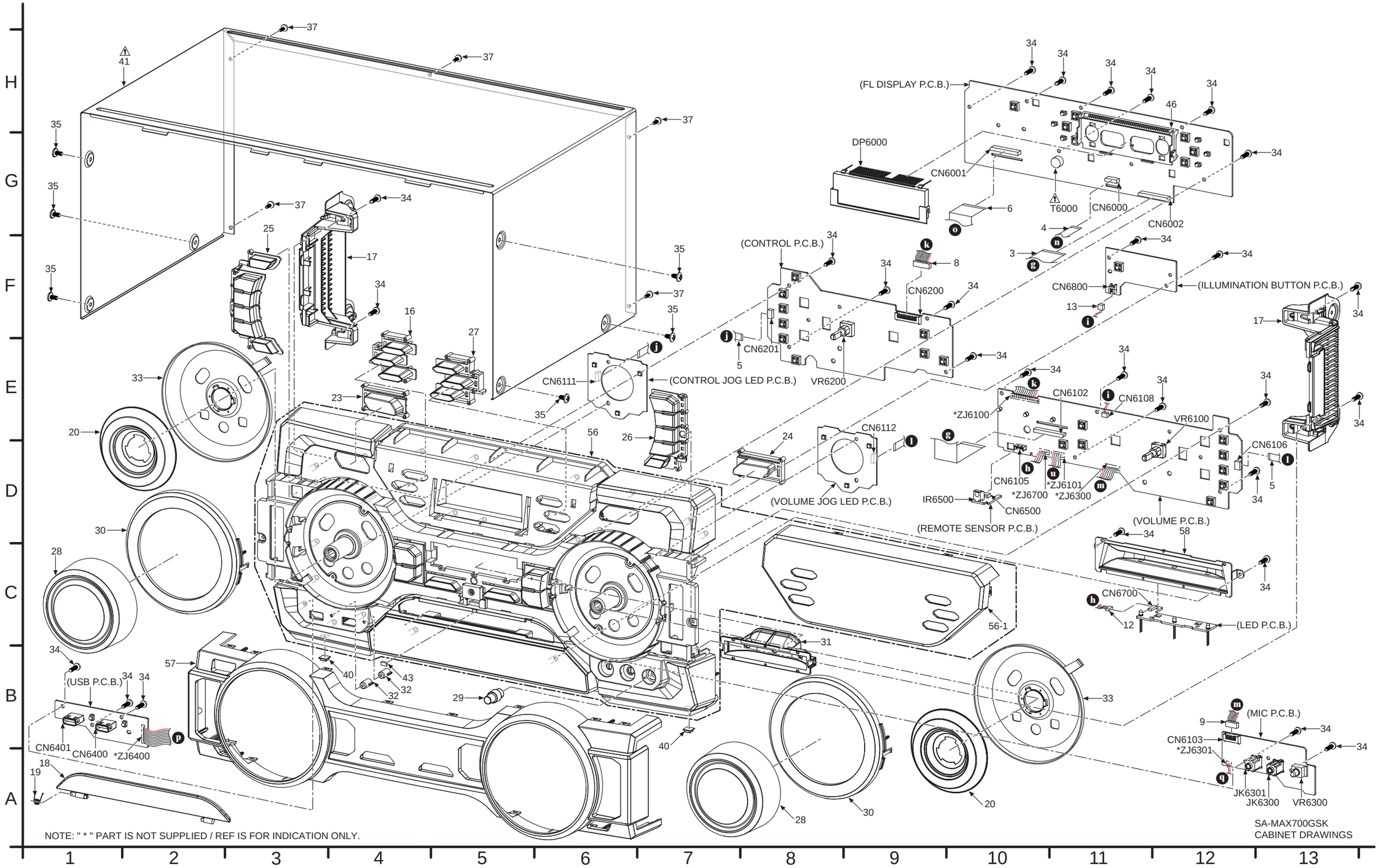

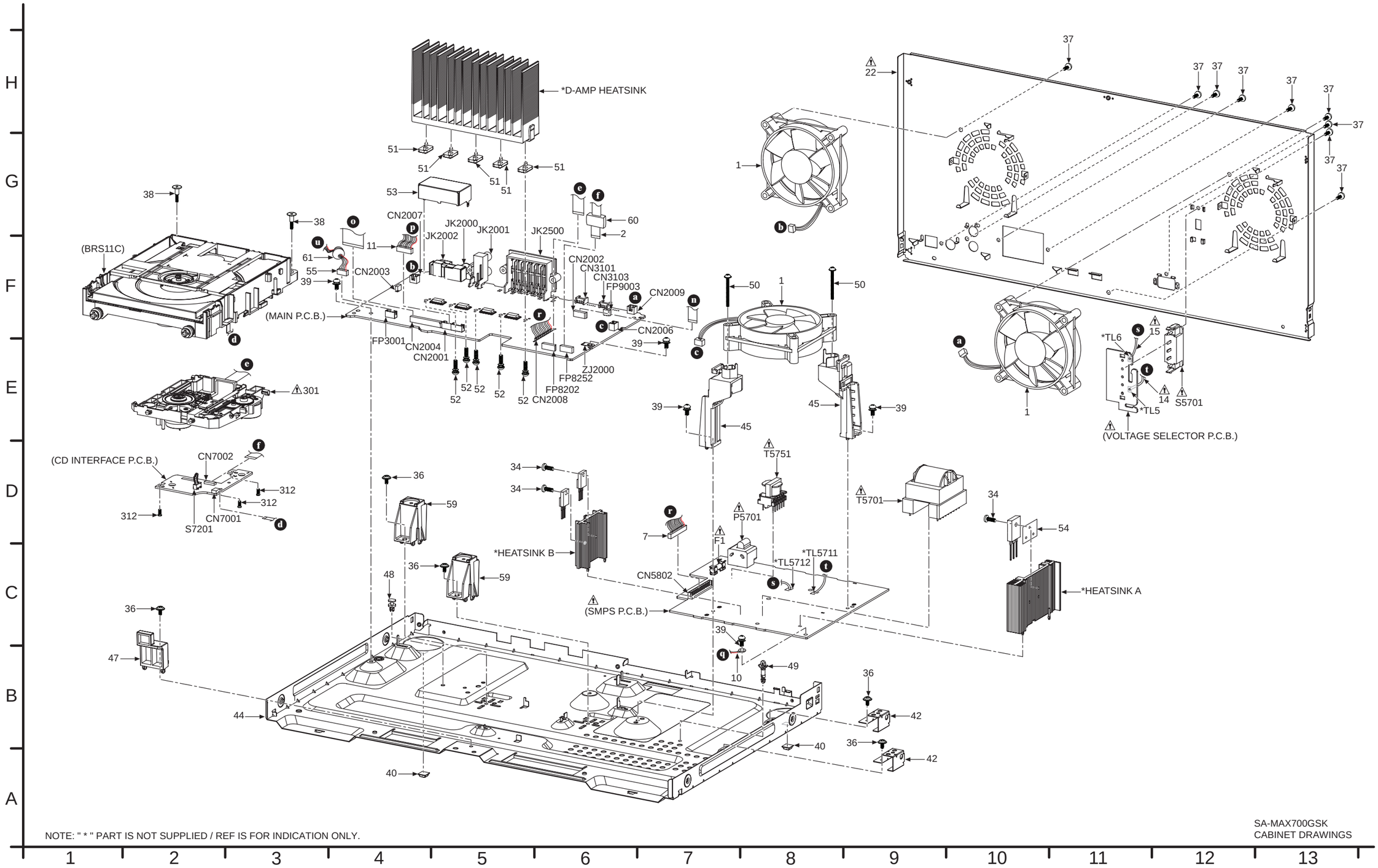

NOTE: " * " PART IS NOT SUPPLIED / REF IS FOR INDICATION ONLY.

SA-MAX700GSK
CABINET DRAWINGS

17.1.2. Packaging

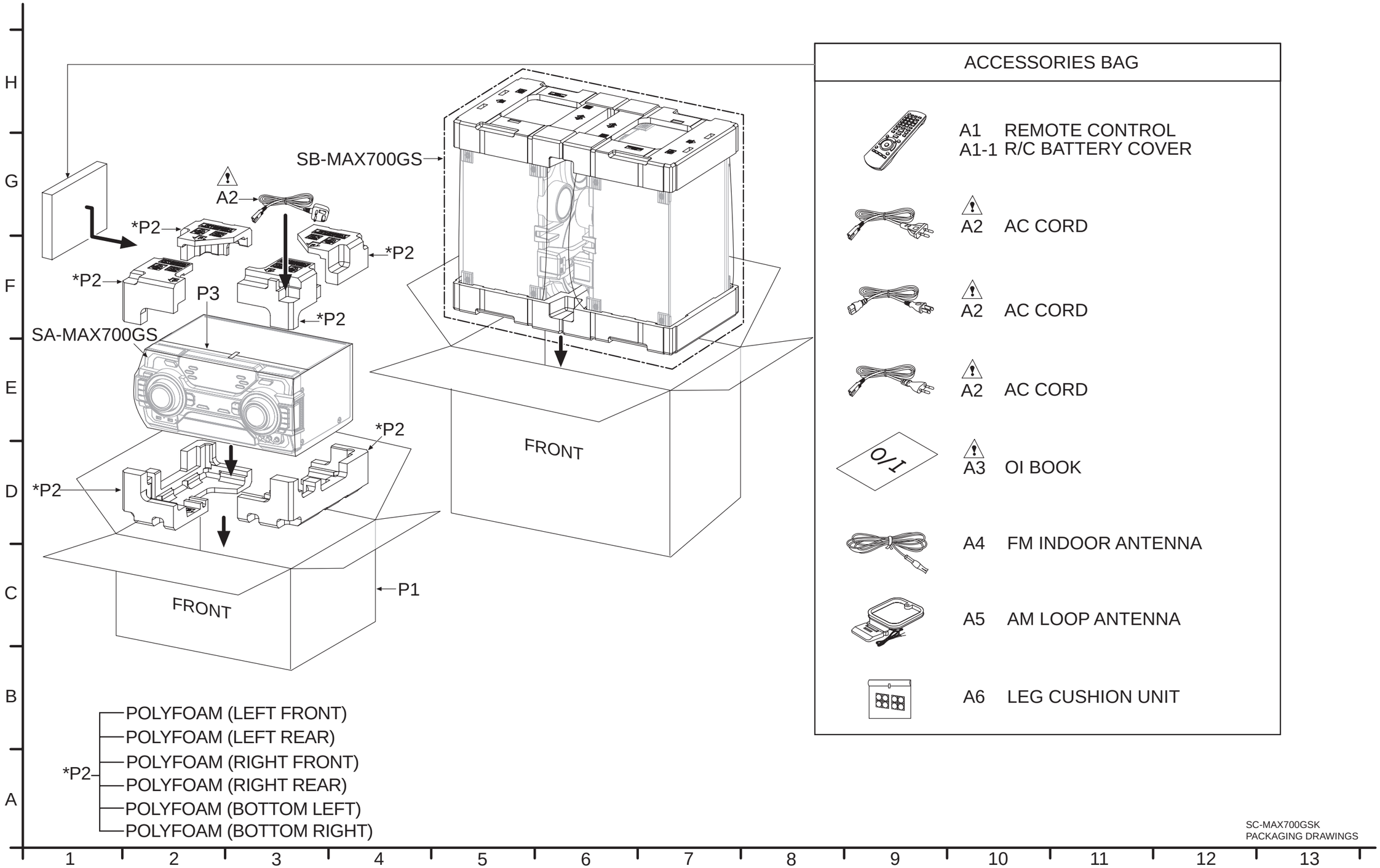

17.1.3. Mechanical Replacement Part List

Important Safety Notice

Components identified by ⚠ mark have special characteristics important for safety.
When replacing any of these components, use only manufacturer's specified parts.

RTL (Retention Time Limited)

Note: The marking (RTL) indicates that the Retention Time is Limited for this item.
After the discontinuation of this assembly in production, the item will continue to be available for a specific period of time. The retention period of availability is dependant on the type of assembly, and in accordance with the laws governing part and product retention.
After the end of this period, the assembly will no longer be available.

Note:

- When replacing any of these components, be sure to use only manufacturer's specified parts shown in the replacement part list.
- The parenthesized indications on the Remarks column specify the destination & product color (Refer to the cover page for the information).
- Parts without these indications shall be used for all areas.
- This product uses a laser diode. Refer to "Precaution of Laser Diode".
- All parts mentioned are supplied by PAVCJM unless indicated likewise.
- Reference for O/I book languages are as follows:

Ar:	Arabic	Du:	Dutch	It:	Italian	Sp:	Spanish
Cf:	Canadian French	En:	English	Ko:	Korean	Sw:	Swedish
Cz:	Czech	Fr:	French	Po:	Polish	Co:	Traditional Chinese
Da:	Danish	Ge:	German	Ru:	Russian	Cn:	Simplified Chinese
Pe:	Persian	Ur:	Ukraine	Pr:	Portuguese	Fi:	Finnish

Safety	Ref. No.	Part No.	Part Name & Description	Qty	Remarks
			CABINET AND CHASSIS		
	1	L6FALEFH0030	FAN UNIT	3	
	2	REE1671	10P FFC (MAIN - CD INTERFACE)	1	
	3	REE1725	30P FFC (FL DISPLAY - VOLUME)	1	
	4	REE1735	10P FFC (FL DISPLY-MAIN)	1	
	5	REE1760	6P FFC (CONTROL JOG - CONTROL/ VOLUME JOG LED - VOLUME)	2	
	6	REE1764	30P FFC (FL DISPLY - MAIN)	1	
	7	REX1558	13P CABLE WIRE (MAIN - SMPS)	1	
	8	REX1576	12P CABLE WIRE (CONTROL - VOLUME)	1	
	9	REX1557	8P CABLE WIRE (VOLUME - MIC)	1	
	10	REX1556	2P CABLE WIRE (MIC - SMPS)	1	
	11	REX1559	11P CABLE WIRE (USB-MAIN)	1	
	12	REX1563	4P CABLE WIRE (VOLUME - LED)	1	
	13	REX1560-1	2P CABLE WIRE (ILLUMINATION BUTTON - VOLUME)	1	

Safety	Ref. No.	Part No.	Part Name & Description	Qty	Remarks
⚠	14	REXX1122-K	1P BLK WIRE (VOLTAGE SELECTOR -SMPS)	1	
⚠	15	REXX1123-K	1P RED WIRE (VOLTAGE SELECTOR - SMPS)	1	
	16	RGU2872-W	MEMORY BUTTON L	1	
	17	RGK2471-K	SIDE COVER	2	
	18	RGK2468-K	CD LID	1	
	19	RMB0930	CD LID SPRING	1	
	20	RGQ0666-W	VOULME LIGHT DIFFUSER	2	
⚠	22	RGR0439B-B1	REAR PANEL	1	
	23	RGU2843-W	DJ EFFECT BUTTON	1	
	24	RGU2844-W	ILLUMINATION BUTTON	1	
	25	RGU2870A-K	POWER BUTTON	1	
	26	RGU2871-K	FUNCTION BUTTON	1	
	27	RGU2873-W	MEMORY BUTTON R	1	
	28	RGW0428-S1	VOLUME KNOB	2	
	29	RGWX0056-1K1	MIC KNOB	1	
	30	RGL0786-W	VOL LIGHT RING	2	
	31	RGC0051-W	CENTER LIGHT HOUSE	1	
	32	RGL0787-W	USB REC LIGHT PIECE	2	
	33	RGC0043-W1	VOLUME LIGHT REFLECTOR	2	
	34	RHD26046-L	SCREW	31	
	35	RHD30007-K2J	SCREW	6	
	36	RHD30111-31	SCREW	5	
	37	RHD30119-S	SCREW	14	
	38	RHDX031008	SCREW	2	

Safety	Ref. No.	Part No.	Part Name & Description	Qty	Remarks
	39	RHDX30005-J	SCREW	5	
	40	RKAX0042-K	LEG CUSHION	4	
⚠	41	RKM0702-K	TOP CABINET	1	
	42	RMA2451	SMPS PCB SUPPORT	2	
	43	RMGX0033A-K	CD LID CUSHION	1	
	44	RMK0827A-1	BOTTOM CHASSIS	1	
	45	RMKX1016-4	FAN FIXTURE	2	
	46	RMNV0079-1	FL HOLDER	1	
	47	RMQ2154	FRONT MECHA SUP-PORT	1	
	48	RMX0444	PCB SPACER	1	
	49	RMX0510	SMPS PCB SPACER	1	
	50	XTW3+30TFJ	SCREW	2	
	51	RMZX1022	HEATSINK SPACER	5	
	52	RHD26043-1	SCREW	5	
	53	RSC1230	TUNER SHIELD	1	
	54	RMZ1378	IC INSUALTOR	1	
	55	REX1627	5P WIRE(VOL - MAIN)	1	
	56	RYP1930D-K	FRONT PANEL ASS'Y	1	
	56-1	RKW1033-Q	FL WINDOW	1	
	57	RYP1300-S	CENTER ORNAMENT ASS'Y	1	
	58	RGC0046-W1	LIGHTING HOUSE	1	
	59	RMQX1088-J	MECHA HOLDER	2	
	60	J0KD00000154	FERRITE CORE	1	
	61	J0KE00000192	FERRITE CORE	1	
			TRAVERSE DECK		
⚠	301	RAE1037Z-V	TRAVERSE ASS'Y	1	
	312	XTN2+6GFJ	SCREW	3	
			PACKING MATERI-ALS		
	P1	RPG0E39	PACKING CASE	1	
	P2	RPN2485-1	POLYFOAM	1	
	P3	RPH0310	MIRAMAT SHEET	1	
			ACCESSORIES		
	A1	N2QAYB000850	REMOTE CONTROL	1	
	A1-1	RKK-PM500EBK	R/C BATTERY COVER	1	
⚠	A2	K2CJ2YY00093	AC CORD	1	
⚠	A2	K2CP2YY00061	AC CORD	1	
⚠	A2	K2CQ2YY00119	AC CORD	1	
⚠	A2	K2CT2YY00097	AC CORD	1	
⚠	A3	RQT9838-G	O/I BOOK (En/Cn/Ar)	1	
	A4	RSAX0002	FM INDOOR ANTENNA	1	
	A5	N1DYYYY00011	AM LOOP ANTENNA	1	
	A6	RYQ1201-K	LEG CUSHION	1	

17.2. Electrical Replacement Part List

Important Safety Notice

Components identified by ⚠ mark have special characteristics important for safety.
When replacing any of these components, use only manufacturer's specified parts.

RTL (Retention Time Limited)

Note: The marking (RTL) indicates that the Retention Time is Limited for this item.
After the discontinuation of this assembly in production, the item will continue to be available for a specific period of time. The retention period of availability is dependant on the type of assembly, and in accordance with the laws governing part and product retention.
After the end of this period, the assembly will no longer be available.

Note:

- When replacing any of these components, be sure to use only manufacturer's specified parts shown in the replacement part list.
- The parenthesized indications on the Remarks column specify the destination & product color (Refer to the cover page for the information).
- Parts without these indications shall be used for all areas.
- This product uses a laser diode. Refer to "Precaution of Laser Diode".
- Capacitor value are in microfarads (uF) unless specified otherwise, P=Pico-farads (pF), F=Farads.
- Resistance values are in ohms, unless specified otherwise, 1K=1000 (OHM).
- All parts mentioned are supplied by PAVCJM unless indicated likewise.
- Parts mentioned [SPG] in the Remarks column are supplied by JAPAN.

E.S.D. standards for Electrostatically Sensitive Devices, refer to "PREVENTION OF ELECTROSTATIC DISCHARGE (ESD) TO ELECTROSTATIC SENSITIVE (ES) DEVICES" section.

Safety	Ref. No.	Part No.	Part Name & Description	Qty	Remarks
			PRINTED CIRCUIT BOARDS		
	PCB1	REP4882K	MAIN P.C.B.	1	(RTL)
	PCB2	REP4883AA	FL DISPLAY P.C.B.	1	(RTL)
	PCB3	REP4883AB	VOLUME P.C.B.	1	(RTL)
	PCB4	REP4883AC	CONTROL P.C.B.	1	(RTL)
	PCB5	REP4883AD	MIC P.C.B.	1	(RTL)
	PCB6	REP4883AE	USB P.C.B.	1	(RTL)
	PCB7	REP4883AF	REMOTE SENSOR P.C.B.	1	(RTL)
	PCB8	REP4883AG	LED P.C.B.	1	(RTL)
	PCB9	REP4883AH	ILLIMINATION BUTTON P.C.B.	1	(RTL)
⚠	PCB10	REP4908H	SMPS P.C.B.	1	(RTL)
⚠	PCB11	REP4908H	VOLTAGE SELECTOR P.C.B.	1	(RTL)
	PCB12	REP4915AA	CONTROL JOG LED P.C.B.	1	(RTL)
	PCB13	REP4915AB	VOLUME JOG LED P.C.B.	1	(RTL)
	PCB14	REP4755A	CD INTERFACE P.C.B.	1	(RTL)
			INTEGRATED CIRCUITS		
	IC2000	VUEALLPT056	IC	1	(E.S.D) SPG
	IC2001	C0FBAY000032	IC	1	(E.S.D)
	IC2002	C0JBAR000367	IC	1	(E.S.D)
	IC2003	C0DBGYY02205	IC	1	(E.S.D)
	IC2004	C0DBZYY00592	IC	1	(E.S.D)

Safety	Ref. No.	Part No.	Part Name & Description	Qty	Remarks
	IC2005	C1AB00003800	IC	1	(E.S.D)
	IC2006	RFKWMMAX700M	IC	1	(E.S.D), JIGS & ADJ
	IC2007	C3EBEY000037	IC	1	(E.S.D)
	IC2008	C1AB00004003	IC	1	(E.S.D)
	IC2009	C0DBGYY03056	IC	1	(E.S.D)
	IC2010	C0ABBB000067	IC	1	(E.S.D)
	IC2011	C0DBAYY01594	IC	1	(E.S.D)
	IC2012	C0DBAYY01594	IC	1	(E.S.D)
	IC2501	C1AB00004014	IC	1	(E.S.D)
	IC2502	C1AB00004014	IC	1	(E.S.D)
	IC2503	C1AB00004014	IC	1	(E.S.D)
	IC2504	C1AB00004014	IC	1	(E.S.D)
	IC3101	C0DBZYY00592	IC	1	(E.S.D)
	IC3102	AN32183A-VF	IC	1	(E.S.D)
	IC5701	C1ZBZ0004646	IC	1	(E.S.D)
	IC5790	MIP2F20MSSCF	IC	1	(E.S.D)
	IC5801	C0DAZYY00039	IC	1	(E.S.D)
	IC5899	C0DAZYY00039	IC	1	(E.S.D)
	IC6000	C0HBB0000057	IC	1	(E.S.D)
	IC6300	C1AB00003130	IC	1	(E.S.D)
	IC8001	MN6627993AB	IC	1	(E.S.D)
	IC8051	C3ABMY000027	IC	1	(E.S.D)
	IC8251	C0GBY0000117	IC	1	(E.S.D)
	IC8401	C3FBMY000309	IC	1	(E.S.D)
	IC8501	C3FBYY000035	IC	1	(E.S.D)
			TRANSISTORS		
	Q2000	B1ADCE000012	TRANSISTOR	1	(E.S.D)
	Q2001	B1GBCFLL0037	TRANSISTOR	1	(E.S.D)
	Q2002	B1AAJC000019	TRANSISTOR	1	(E.S.D)
	Q2003	B1ADCE000012	TRANSISTOR	1	(E.S.D)
	Q2004	B1GBCFJJ0051	TRANSISTOR	1	(E.S.D)
	Q2005	B1BACG000023	TRANSISTOR	1	(E.S.D)

Safety	Ref. No.	Part No.	Part Name & Description	Qty	Remarks
	Q2006	B1ABCF000231	TRANSISTOR	1	(E.S.D)
	Q2007	B1ABCF000231	TRANSISTOR	1	(E.S.D)
	Q2008	B1ABCF000231	TRANSISTOR	1	(E.S.D)
	Q2009	B1ABCF000231	TRANSISTOR	1	(E.S.D)
	Q2010	B1ABCF000231	TRANSISTOR	1	(E.S.D)
	Q2011	B1ABCF000231	TRANSISTOR	1	(E.S.D)
	Q2012	B1GBCFJJ0041	TRANSISTOR	1	(E.S.D)
	Q2013	B1ABCF000231	TRANSISTOR	1	(E.S.D)
	Q2014	B1ABCF000231	TRANSISTOR	1	(E.S.D)
	Q2015	B1ABCF000231	TRANSISTOR	1	(E.S.D)
	Q2022	B1BACG000023	TRANSISTOR	1	(E.S.D)
	Q2023	B1GBCFJJ0041	TRANSISTOR	1	(E.S.D)
	Q2024	B1GBCFJJ0041	TRANSISTOR	1	(E.S.D)
	Q2631	B1ABCF000231	TRANSISTOR	1	(E.S.D)
	Q2632	B1ABCF000231	TRANSISTOR	1	(E.S.D)
	Q2633	B1ABCF000231	TRANSISTOR	1	(E.S.D)
	Q2634	B1ADCE000012	TRANSISTOR	1	(E.S.D)
	Q3101	B1ADCE000012	TRANSISTOR	1	(E.S.D)
	Q3200	B1ABCF000176	TRANSISTOR	1	(E.S.D)
	Q3202	B1ABCF000176	TRANSISTOR	1	(E.S.D)
	Q3301	B1GBCFJJ0041	TRANSISTOR	1	(E.S.D)
	Q5700	B1DEJU000001	TRANSISTOR	1	(E.S.D)
	Q5711	B1ABCF000176	TRANSISTOR	1	(E.S.D)
	Q5720	B1BABG000007	TRANSISTOR	1	(E.S.D)
	Q5721	B1ADCF000001	TRANSISTOR	1	(E.S.D)
	Q5803	B1BABG000007	TRANSISTOR	1	(E.S.D)
	Q5898	B1ABCF000176	TRANSISTOR	1	(E.S.D)
	Q6001	B1ABMG000008	TRANSISTOR	1	(E.S.D)
	Q8201	B1ADCF000001	TRANSISTOR	1	(E.S.D)
	QR101	B1GBCFGN0016	TRANSISTOR	1	(E.S.D)
	QR102	B1ADCE000012	TRANSISTOR	1	(E.S.D)
	QR2000	B1GBCFGN0016	TRANSISTOR	1	(E.S.D)
	QR2001	B1GBCFJJ0051	TRANSISTOR	1	(E.S.D)
	QR2002	B1GBCFJJ0051	TRANSISTOR	1	(E.S.D)
	QR2003	B1GBCFJJ0051	TRANSISTOR	1	(E.S.D)
	QR3000	B1GBCFGN0016	TRANSISTOR	1	(E.S.D)
	QR5810	B1GBCFLL0037	TRANSISTOR	1	(E.S.D)
	QR6100	B1GBCFJJ0051	TRANSISTOR	1	(E.S.D)
			DIODES		
	D2001	DA2J10100L	DIODE	1	(E.S.D)
	D2002	DA2J10100L	DIODE	1	(E.S.D)
	D2003	B0ADDJ000032	DIODE	1	(E.S.D)
	D2004	DA2J10100L	DIODE	1	(E.S.D)
	D2005	DA2J10100L	DIODE	1	(E.S.D)
	D2006	DA2J10100L	DIODE	1	(E.S.D)
	D2007	DZ2J130M0L	DIODE	1	(E.S.D)
	D2017	DZ2J130M0L	DIODE	1	(E.S.D)
	D3200	B0ADCC000002	DIODE	1	(E.S.D)
	D3202	B0ADCC000002	DIODE	1	(E.S.D)
	D3301	B0ADDJ000032	DIODE	1	(E.S.D)
	D3303	B0JCPG000030	DIODE	1	(E.S.D)
	D3351	B0ECKM000008	DIODE	1	(E.S.D)
	D5701	B0FBBV000006	DIODE	1	(E.S.D)
	D5702	B0ZBZ0000205	DIODE	1	(E.S.D)
	D5703	B0JCPD000025	DIODE	1	(E.S.D)
	D5721	DZ2J180M0L	DIODE	1	(E.S.D)
	D5722	DZ2J200M0L	DIODE	1	(E.S.D)
	D5723	DA2J10100L	DIODE	1	(E.S.D)
	D5724	DA2J10100L	DIODE	1	(E.S.D)
	D5725	DZ2J062M0L	DIODE	1	(E.S.D)
	D5726	B0EAMM000057	DIODE	1	(E.S.D)
	D5727	DA2J10100L	DIODE	1	(E.S.D)
	D5728	DA2J10100L	DIODE	1	(E.S.D)
	D5729	B0EAMM000057	DIODE	1	(E.S.D)
	D5730	B0ECET000006	DIODE	1	(E.S.D)
	D5731	B0EAMM000057	DIODE	1	(E.S.D)
	D5732	DZ2J360M0L	DIODE	1	(E.S.D)
	D5793	B0HAMP000094	DIODE	1	(E.S.D)
	D5795	DZ2J091M0L	DIODE	1	(E.S.D)
	D5798	B0EAMM000057	DIODE	1	(E.S.D)
	D5801	B0ZAZ0000095	DIODE	1	(E.S.D)

Safety	Ref. No.	Part No.	Part Name & Description	Qty	Remarks
	D5802	B0ZAZ0000095	DIODE	1	(E.S.D)
	D5896	B0EAMM000057	DIODE	1	(E.S.D)
	D6000	B3AKA0000022	DIODE	1	(E.S.D)
	D6001	B3AKA0000022	DIODE	1	(E.S.D)
	D6002	B3AKA0000022	DIODE	1	(E.S.D)
	D6003	B3AKA0000022	DIODE	1	(E.S.D)
	D6004	B3AKA0000022	DIODE	1	(E.S.D)
	D6005	B3AKA0000022	DIODE	1	(E.S.D)
	D6006	B0BC033A0282	DIODE	1	(E.S.D)
	D6007	B0EAMM000057	DIODE	1	(E.S.D)
	D6008	B0JAME000114	DIODE	1	(E.S.D)
	D6009	DZ2J24000L	DIODE	1	(E.S.D)
	D6010	B0EAMM000057	DIODE	1	(E.S.D)
	D6012	B0BC2R4A0006	DIODE	1	(E.S.D)
	D6013	DA2J10100L	DIODE	1	(E.S.D)
	D6014	DA2J10100L	DIODE	1	(E.S.D)
	D6015	DA2J10100L	DIODE	1	(E.S.D)
	D6016	DA2J10100L	DIODE	1	(E.S.D)
	D6017	DA2J10100L	DIODE	1	(E.S.D)
	D6018	DA2J10100L	DIODE	1	(E.S.D)
	D6019	B0EAMM000057	DIODE	1	(E.S.D)
	D6106	B3AAA0001129	DIODE	1	(E.S.D)
	D6107	B3AAA0001129	DIODE	1	(E.S.D)
	D6108	B3AAA0001129	DIODE	1	(E.S.D)
	D6200	B3AZB0000101	DIODE	1	(E.S.D)
	D6201	B3AZB0000101	DIODE	1	(E.S.D)
	D6203	B3AZB0000101	DIODE	1	(E.S.D)
	D6204	B3AZB0000101	DIODE	1	(E.S.D)
	D6205	B3AZB0000101	DIODE	1	(E.S.D)
	D6206	B3AZB0000101	DIODE	1	(E.S.D)
	D6400	B3AGA0000026	DIODE	1	(E.S.D)
	D6401	B3ABA0000187	DIODE	1	(E.S.D)
	D6700	B3AEA0000172	DIODE	1	(E.S.D)
	D6701	B3AEA0000172	DIODE	1	(E.S.D)
	D6702	B3AEA0000172	DIODE	1	(E.S.D)
	D6901	DA2J10100L	DIODE	1	(E.S.D)
	D6902	DA2J10100L	DIODE	1	(E.S.D)
	D6903	DA2J10100L	DIODE	1	(E.S.D)
	D6904	DA2J10100L	DIODE	1	(E.S.D)
	D6905	DA2J10100L	DIODE	1	(E.S.D)
	D6906	DA2J10100L	DIODE	1	(E.S.D)
	D8250	DZ2J056M0L	DIODE	1	(E.S.D)
	D8251	DA2J10100L	DIODE	1	(E.S.D)
	DZ2000	B0JCPG000030	DIODE	1	(E.S.D)
⚠	DZ5701	D4EAY511A127	ZNR	1	(E.S.D)
			VARIABLE RESIS-TORS		
	VR6100	EVEKE2F3024B	VOLUME JOG	1	
	VR6200	K9AA012Y0011	ALBUM/TRACK JOG	1	
	VR6300	EVUF2AF15B14	MIC JOG	1	
			VARISTOR		
	VA2002	EZAEG2A50AX	ESD SUPRESSOR	1	
			FILTERS		
	VA5700	J0LY00000168	FILTER	1	
	VA5701	J0LY00000168	FILTER	1	
			SWITCHES		
⚠	S5701	K0ABCA000007	SW VOLTAGE SELECTOR	1	
	S6000	EVQ21405RJ	SW PLAYLIST 2	1	
	S6001	EVQ21405RJ	SW PLAYLIST 3	1	
	S6002	EVQ21405RJ	SW PLAYLIST 4	1	
	S6003	EVQ21405RJ	SW PLAYLIST 1	1	
	S6004	EVQ21405RJ	SW PLAYLIST 5	1	
	S6005	EVQ21405RJ	SW PLAYLIST 6	1	
	S6006	EVQ21405RJ	SW DJ	1	

Safety	Ref. No.	Part No.	Part Name & Description	Qty	Remarks
	S6100	EVQ21405RJ	SW CD	1	
	S6101	EVQ21405RJ	SW RADIO/EXT-IN	1	
	S6102	EVQ21405RJ	SW STOP/TUNE MODE	1	
	S6103	EVQ21405RJ	SW MEMORY	1	
	S6104	EVQ21405RJ	SW USB	1	
	S6105	EVQ21405RJ	SW PLAY/PAUSE	1	
	S6106	EVQ21405RJ	SW MEMORY REC/ PAUSE	1	
	S6107	EVQ21405RJ	SW CD OPEN/CLOSE	1	
	S6200	EVQ21405RJ	SW MANUAL EQ	1	
	S6201	EVQ21405RJ	SW ALBUM/TRACK	1	
	S6202	EVQ21405RJ	SW D.BASS	1	
	S6203	EVQ21405RJ	SW POWER	1	
	S6204	EVQ21405RJ	SW LATIN PRESET EQ	1	
	S6205	EVQ21405RJ	SW SUPER WOOFER	1	
	S6206	EVQ21405RJ	SW FORWARD	1	
	S6207	EVQ21405RJ	SW REWIND	1	
	S6208	EVQ21405RJ	SW USB REC/PAUSE	1	
	S6800	EVQ21405RJ	SW ILLUMINATION	1	
	S7201	K0L1BA000158	SW RESET	1	
			CONNECTORS		
	CN2001	K1KA11AA0194	11P CONNECTOR	1	
	CN2002	K1MY10AA0124	10P CONNECTOR	1	
	CN2003	K1MY06AA0124	6P CONNECTOR	1	
	CN2004	K1MY30AA0124	30P CONNECTOR	1	
	CN2006	K1KA02AA0186	2P CONNECTOR	1	
	CN2007	K1KA02AA0186	2P CONNECTOR	1	
	CN2008	K1YZ13000002	CABLE CONNECTOR	1	
	CN2009	K1KA02AA0186	2P CONNECTOR	1	
	CN3101	K1KA04BA0061	4P CONNECTOR	1	
	CN3103	K1KA04BA0061	4P CONNECTOR	1	
	CN5802	K1KA13AA0181	13P CONNECTOR	1	
	CN6000	K1MY10AA0124	10P CONNECTOR	1	
	CN6001	K1MY30AA0124	30P CONNECTOR	1	
	CN6002	K1MN30B00046	30P CONNECTOR	1	
	CN6102	K1MY30AA0124	30P CONNECTOR	1	
	CN6103	K1KA08BA0061	8P CONNECTOR	1	
	CN6105	K1KA04A00553	4P CONNECTOR	1	
	CN6106	K1MN06B00015	6P CONNECTOR	1	
	CN6108	K1YZ02000015	2P CONNECTOR	1	
	CN6111	K1MN06AA0076	6P CONNECTOR	1	
	CN6112	K1MN06AA0076	6P CONNECTOR	1	
	CN6200	K1KA12BA0062	12P CONNECTOR	1	
	CN6201	K1MN06B00015	6P CONNECTOR	1	
	CN6400	K1FY104A0034	CONNECTOR	1	
	CN6401	K1FY104A0034	CONNECTOR	1	
	CN6500	K1KB04B00043	4P CONNECTOR	1	
	CN6700	K1KA04BA0061	4P CONNECTOR	1	
	CN6800	K1KA02BA0061	2P CONNECTOR	1	
	CN7001	K1MY05BA0539	5P CONNECTOR	1	
	CN7002	K1MY10BA0539	10P CONNECTOR	1	
	FP3001	K1KA05AA0051	5P CONNECTOR	1	
	FP8202	K1MN24A00062	24P CONNECTOR	1	
	FP8252	K1MN10AA0076	10P CONNECTOR	1	
	FP9003	K1KA05AA0051	5P CONNECTOR	1	
			COILS AND INDUC-TORS		
	K8335	J0JBC0000134	INDUCTOR	1	
	K8336	J0JBC0000134	INDUCTOR	1	
	K8339	J0JBC0000134	INDUCTOR	1	
	K8340	J0JBC0000134	INDUCTOR	1	
	K8350	G1C100KA0101	INDUCTOR	1	
	L2000	G2A380Y00002	ANTENNA COIL	1	
	L2002	G1CR18JA0020	INDUCTOR	1	
	L2006	G1C1R0MA0204	INDUCTOR	1	
	L2007	G1C330MA0291	INDUCTOR	1	
	L2500	G0C100M00009	INDUCTOR	1	
	L2501	G0C100M00009	INDUCTOR	1	

Safety	Ref. No.	Part No.	Part Name & Description	Qty	Remarks
	L2502	G0C100M00009	INDUCTOR	1	
	L2503	G0C100M00009	INDUCTOR	1	
	L2504	G0C100M00009	INDUCTOR	1	
	L2505	G0C100M00009	INDUCTOR	1	
	L2506	G0C100M00009	INDUCTOR	1	
	L2507	G0C100M00009	INDUCTOR	1	
	L3300	G1C470MA0291	INDUCTOR	1	
⚠	L5701	G0B183J00002	LINE FILTER	1	
⚠	L5702	G0B183J00002	LINE FILTER	1	
	L5704	J0JAC0000018	INDUCTOR	1	
	L5801	G0C220KA0174	INDUCTOR	1	
	L6000	J0JBC0000019	INDUCTOR	1	
	L6300	J0JBC0000019	INDUCTOR	1	
	L6302	J0JBC0000134	INDUCTOR	1	
	LB2000	J0JBC0000134	INDUCTOR	1	
	LB2005	J0JDC0000104	INDUCTOR	1	
	LB2006	J0JBC0000134	INDUCTOR	1	
	LB2008	J0JBC0000134	INDUCTOR	1	
	LB2009	J0JBC0000134	INDUCTOR	1	
	LB3201	J0JBC0000134	INDUCTOR	1	
	LB3401	J0JYC0000118	INDUCTOR	1	
	LB6300	J0JBC0000019	INDUCTOR	1	
	LB6301	J0JBC0000019	INDUCTOR	1	
	LB6302	J0JBC0000019	INDUCTOR	1	
	LB6303	J0JBC0000134	INDUCTOR	1	
	LB8003	J0JHC0000045	INDUCTOR	1	
	LB8004	J0JHC0000045	INDUCTOR	1	
	LB8052	J0JHC0000045	INDUCTOR	1	
	LB8201	J0JHC0000045	INDUCTOR	1	
	LB8202	G1C100KA0101	INDUCTOR	1	
	LB8203	J0JBC0000134	INDUCTOR	1	
	LB8204	J0JBC0000134	INDUCTOR	1	
	LB8251	J0JHC0000045	INDUCTOR	1	
	LB8252	J0JHC0000045	INDUCTOR	1	
	LB8253	G1C100KA0101	INDUCTOR	1	
	LB8401	J0JHC0000045	INDUCTOR	1	
	LB8402	J0JHC0000045	INDUCTOR	1	
	LB8501	J0JHC0000045	INDUCTOR	1	
	R2076	J0JCC0000301	INDUCTOR	1	
	R2137	J0JCC0000301	INDUCTOR	1	
	R2225	J0JCC0000301	INDUCTOR	1	
	R8012	J0JHC0000045	INDUCTOR	1	
	R8015	J0JCC0000301	INDUCTOR	1	
	R8016	J0JCC0000301	INDUCTOR	1	
	R8017	J0JHC0000045	INDUCTOR	1	
			TRANSFORMERS		
⚠	T5701	G4DYZ0000070	TRANSFORMER	1	
⚠	T5751	G4DYZ0000065	TRANSFORMER	1	
⚠	T6000	G4DYA0000214	TRANSFORMER	1	
			PHOTO COUPLERS		
⚠	PC5701	B3PBA0000579	PHOTO COUPLER	1	
⚠	PC5702	B3PBA0000579	PHOTO COUPLER	1	
⚠	PC5720	B3PBA0000579	PHOTO COUPLER	1	
⚠	PC5799	B3PBA0000579	PHOTO COUPLER	1	
			REMOTE SENSOR		
	IR6500	B3RAB0000110	REMOTE SENSOR	1	
			EARTH PLATE		
	ZJ2000	K9ZZ00001279	EARTH PLATE	1	
			OSCILLATORS		
	X2000	H0J245500110	OSCILLATOR	1	
	X2001	H0A327200181	OSCILLATOR	1	
	X2002	H2B800400007	OSCILLATOR	1	

Safety	Ref. No.	Part No.	Part Name & Description	Qty	Remarks
	X8101	H0J338300002	OSCILLATOR	1	
			FUSE		
⚠	F1	K5D103BNA005	FUSE	1	
			FUSE HOLDERS		
	ZA5701	K3GE1ZZ00001	FUSE HOLDER	1	
	ZA5702	K3GE1ZZ00001	FUSE HOLDER	1	
			LCD DISPLAY		
	DP6000	A2BB00000184	LCD DISPLAY	1	
			THERMISTOR		
	TH5861	D4CCY1040001	THERMISTOR	1	
			JACKS		
	JK2000	K4ZZ02000103	JK FM ANTENNA	1	
	JK2001	K2HA2YYA0009	JK AUX IN	1	
	JK2002	K4AC02B00042	JK AM ANTENNA	1	
	JK2500	K4AZ12A00013	JK SPEAKERS	1	
	JK6300	K2HC103A0031	JK MIC	1	
	JK6301	K2HC103A0031	JK MUSIC PORT	1	
⚠	P5701	K2AA2B000011	AC INLET	1	
			CHIP JUMPERS		
	K1	D0GBR00J0004	0 1/10W	1	
	K2501	D0YRR0000001	0 31.5W	1	
	K2502	D0YRR0000001	0 31.5W	1	
	K2503	D0YRR0000001	0 31.5W	1	
	K2504	D0YRR0000001	0 31.5W	1	
	K8202	D0GBR00J0004	0 1/10W	1	
	K8203	D0GBR00J0004	0 1/10W	1	
	K8204	D0GBR00J0004	0 1/10W	1	
	K8205	D0GBR00J0004	0 1/10W	1	
	K8206	D0GBR00J0004	0 1/10W	1	
	K8207	D0GDR00JA017	0 1/8W	1	
	K8208	D0GBR00J0004	0 1/10W	1	
	K8210	D0GBR00J0004	0 1/10W	1	
	K8211	D0GBR00J0004	0 1/10W	1	
	K8212	D0GBR00J0004	0 1/10W	1	
	K8213	D0GBR00J0004	0 1/10W	1	
	K8214	D0GBR00J0004	0 1/10W	1	
	K8215	D0GBR00J0004	0 1/10W	1	
	K8216	D0GBR00J0004	0 1/10W	1	
	K8217	D0GBR00J0004	0 1/10W	1	
	K8218	D0GBR00J0004	0 1/10W	1	
	K8219	D0GBR00J0004	0 1/10W	1	
	K8220	D0GBR00J0004	0 1/10W	1	
	K8331	D0GBR00J0004	0 1/10W	1	
	K8332	D0GBR00J0004	0 1/10W	1	
	K8333	D0GBR00J0004	0 1/10W	1	
	K8334	D0GBR00J0004	0 1/10W	1	
	K8341	D0GBR00J0004	0 1/10W	1	
	K8343	D0GBR00J0004	0 1/10W	1	
	K8345	D0GBR00J0004	0 1/10W	1	
	K8347	D0GBR00J0004	0 1/10W	1	
	K8348	D0GBR00J0004	0 1/10W	1	
	K8351	D0GDR00JA017	0 1/8W	1	
	K8352	D0GDR00JA017	0 1/8W	1	
	L2005	D0GBR00J0004	0 1/10W	1	
	LB2007	D0GBR00J0004	0 1/10W	1	
	LB2010	D0GBR00J0004	0 1/10W	1	
	LB2011	D0GBR00J0004	0 1/10W	1	
	LB2012	D0GBR00J0004	0 1/10W	1	
	LB8254	D0GBR00J0004	0 1/10W	1	
	W500	D0GBR00JA008	0 1/10W	1	
	W5904	D0GBR00JA008	0 1/10W	1	

Safety	Ref. No.	Part No.	Part Name & Description	Qty	Remarks
	W5929	D0GDR00JA017	0 1/8W	1	
	W5930	D0GDR00JA017	0 1/8W	1	
	W6001	D0GBR00JA008	0 1/10W	1	
	W6002	D0GBR00JA008	0 1/10W	1	
	W6006	D0GBR00JA008	0 1/10W	1	
	W6007	D0GBR00JA008	0 1/10W	1	
	W6008	D0GBR00JA008	0 1/10W	1	
	W6009	D0GBR00JA008	0 1/10W	1	
	W6010	D0GBR00JA008	0 1/10W	1	
	W6011	D0GBR00JA008	0 1/10W	1	
	W6012	D0GBR00JA008	0 1/10W	1	
	W6013	D0GBR00JA008	0 1/10W	1	
	W6014	D0GBR00JA008	0 1/10W	1	
	W6015	D0GBR00JA008	0 1/10W	1	
	W6016	D0GDR00JA017	0 1/8W	1	
	W6017	D0GDR00JA017	0 1/8W	1	
	W6018	D0GDR00JA017	0 1/8W	1	
	W6019	D0GFR00JA017	0 1/4W	1	
	W6020	D0GFR00JA017	0 1/4W	1	
	W6021	D0GFR00JA017	0 1/4W	1	
	W6022	D0GFR00JA017	0 1/4W	1	
	W6023	D0GFR00JA017	0 1/4W	1	
	W6024	D0GFR00JA017	0 1/4W	1	
	W6025	D0GFR00JA017	0 1/4W	1	
	W6026	D0GFR00JA017	0 1/4W	1	
	W6028	D0GFR00JA017	0 1/4W	1	
	W6029	D0GFR00JA017	0 1/4W	1	
	W6030	D0GFR00JA017	0 1/4W	1	
	W6031	D0GFR00JA017	0 1/4W	1	
	W6032	D0GFR00JA017	0 1/4W	1	
	W6033	D0GFR00JA017	0 1/4W	1	
	W6034	D0GFR00JA017	0 1/4W	1	
	W6035	D0GFR00JA017	0 1/4W	1	
	W6036	D0GFR00JA017	0 1/4W	1	
	W6037	D0GFR00JA017	0 1/4W	1	
	W6038	D0GFR00JA017	0 1/4W	1	
	W6039	D0GDR00JA017	0 1/8W	1	
	W6041	D0GFR00JA017	0 1/4W	1	
	W6042	D0GFR00JA017	0 1/4W	1	
	W6043	D0GFR00JA017	0 1/4W	1	
	W6044	D0GFR00JA017	0 1/4W	1	
	W6045	D0GFR00JA017	0 1/4W	1	
	W6046	D0GFR00JA017	0 1/4W	1	
	W6047	D0GFR00JA017	0 1/4W	1	
	W6049	D0GDR00JA017	0 1/8W	1	
	W6050	D0GFR00JA017	0 1/4W	1	
	W6051	D0GFR00JA017	0 1/4W	1	
	W6052	D0GFR00JA017	0 1/4W	1	
	W6053	D0GFR00JA017	0 1/4W	1	
	W6057	D0GDR00JA017	0 1/8W	1	
	W6058	D0GFR00JA017	0 1/4W	1	
	W6061	D0GFR00JA017	0 1/4W	1	
	W6062	D0GFR00JA017	0 1/4W	1	
	W6066	D0GFR00JA017	0 1/4W	1	
	W6072	D0GFR00JA017	0 1/4W	1	
	W6073	D0GFR00JA017	0 1/4W	1	
	W6074	D0GFR00JA017	0 1/4W	1	
	W6075	D0GFR00JA017	0 1/4W	1	
	W6076	D0GFR00JA017	0 1/4W	1	
	W6077	D0GDR00JA017	0 1/8W	1	
	W6080	D0GFR00JA017	0 1/4W	1	
	W6081	D0GFR00JA017	0 1/4W	1	
	W6082	D0GDR00JA017	0 1/8W	1	
	W6083	D0GDR00JA017	0 1/8W	1	
	W6084	D0GBR00JA008	0 1/10W	1	
	W6085	D0GDR00JA017	0 1/8W	1	
	W6087	D0GDR00JA017	0 1/8W	1	
	W6089	D0GFR00JA017	0 1/4W	1	
	W6090	D0GDR00JA017	0 1/8W	1	
	W6091	D0GFR00JA017	0 1/4W	1	
	W6092	D0GFR00JA017	0 1/4W	1	
	W6093	D0GFR00JA017	0 1/4W	1	
	W6101	D0GFR00JA017	0 1/4W	1	

Safety	Ref. No.	Part No.	Part Name & Description	Qty	Remarks
	W6102	D0GFR00JA017	0 1/4W	1	
	W6103	D0GFR00JA017	0 1/4W	1	
	W6105	D0GFR00JA017	0 1/4W	1	
	W6106	D0GFR00JA017	0 1/4W	1	
	W6108	D0GFR00JA017	0 1/4W	1	
	W6109	D0GDR00JA017	0 1/8W	1	
	W6110	D0GFR00JA017	0 1/4W	1	
	W6113	D0GFR00JA017	0 1/4W	1	
	W6114	D0GFR00JA017	0 1/4W	1	
	W6115	D0GFR00JA017	0 1/4W	1	
	W6116	D0GFR00JA017	0 1/4W	1	
	W6117	D0GBR00JA008	0 1/10W	1	
	W6118	D0GFR00JA017	0 1/4W	1	
	W6119	D0GFR00JA017	0 1/4W	1	
	W6120	D0GFR00JA017	0 1/4W	1	
	W6121	D0GFR00JA017	0 1/4W	1	
	W6122	D0GFR00JA017	0 1/4W	1	
	W6123	D0GBR00JA008	0 1/10W	1	
	W6124	D0GFR00JA017	0 1/4W	1	
	W6125	D0GFR00JA017	0 1/4W	1	
	W6126	D0GFR00JA017	0 1/4W	1	
	W6127	D0GFR00JA017	0 1/4W	1	
	W6128	D0GFR00JA017	0 1/4W	1	
	W6129	D0GFR00JA017	0 1/4W	1	
	W6130	D0GFR00JA017	0 1/4W	1	
	W6131	D0GFR00JA017	0 1/4W	1	
	W6136	D0GFR00JA017	0 1/4W	1	
	W6143	D0GFR00JA017	0 1/4W	1	
	W6144	D0GDR00JA017	0 1/8W	1	
	W6145	D0GFR00JA017	0 1/4W	1	
	W6146	D0GFR00JA017	0 1/4W	1	
	W6147	D0GFR00JA017	0 1/4W	1	
	W6148	D0GBR00JA008	0 1/10W	1	
	W6149	D0GFR00JA017	0 1/4W	1	
	W6150	D0GFR00JA017	0 1/4W	1	
	W6151	D0GFR00JA017	0 1/4W	1	
	W6152	D0GFR00JA017	0 1/4W	1	
	W6153	D0GFR00JA017	0 1/4W	1	
	W6154	D0GFR00JA017	0 1/4W	1	
	W6158	D0GDR00JA017	0 1/8W	1	
	W6159	D0GDR00JA017	0 1/8W	1	
	W6160	D0GFR00JA017	0 1/4W	1	
	W6161	D0GFR00JA017	0 1/4W	1	
	W6162	D0GFR00JA017	0 1/4W	1	
	W6163	D0GFR00JA017	0 1/4W	1	
	W6164	D0GFR00JA017	0 1/4W	1	
	W6165	D0GDR00JA017	0 1/8W	1	
	W6166	D0GDR00JA017	0 1/8W	1	
	W6167	D0GBR00JA008	0 1/10W	1	
	W6168	D0GFR00JA017	0 1/4W	1	
	W6169	D0GFR00JA017	0 1/4W	1	
	W6170	D0GDR00JA017	0 1/8W	1	
	W6171	D0GBR00JA008	0 1/10W	1	
	W6172	D0GDR00JA017	0 1/8W	1	
	W6173	D0GFR00JA017	0 1/4W	1	
	W6174	D0GFR00JA017	0 1/4W	1	
	W6175	D0GFR00JA017	0 1/4W	1	
	W6176	D0GFR00JA017	0 1/4W	1	
			RESISTORS		
	R2000	D0GB103JA008	10K 1/10W	1	
	R2001	D0GB103JA008	10K 1/10W	1	
	R2002	D0GB103JA008	10K 1/10W	1	
	R2003	D0GB103JA008	10K 1/10W	1	
	R2004	D0GB473JA008	47K 1/10W	1	
	R2005	D0GB473JA008	47K 1/10W	1	
	R2006	D0GB101JA008	100 1/10W	1	
	R2007	D0GB473JA008	47K 1/10W	1	
	R2008	D0GB101JA008	100 1/10W	1	
	R2009	D0GB101JA008	100 1/10W	1	
	R2011	D0GBR00JA008	0 1/10W	1	
	R2012	D0GA472JA023	4.7K 1/16W	1	

Safety	Ref. No.	Part No.	Part Name & Description	Qty	Remarks
	R2013	D0GBR00JA008	0 1/10W	1	
	R2015	D0GA472JA023	4.7K 1/16W	1	
	R2017	D0GBR00JA008	0 1/10W	1	
	R2018	D0GA221JA023	220 1/16W	1	
	R2019	D0GA221JA023	220 1/16W	1	
	R2020	D0GA102JA023	1K 1/16W	1	
	R2023	D0GB222JA008	2.2K 1/10W	1	
	R2024	D0GBR00J0004	0 1/10W	1	
	R2025	D0GB561JA008	560 1/10W	1	
	R2026	D0GB222JA008	2.2K 1/10W	1	
	R2027	D0GBR00J0004	0 1/10W	1	
	R2038	D0GB330JA008	33 1/10W	1	
	R2040	D0GB330JA008	33 1/10W	1	
	R2041	D0GB330JA008	33 1/10W	1	
	R2042	D0GB330JA008	33 1/10W	1	
	R2043	D0GB221JA007	220 1/10W	1	
	R2046	D0GB103JA008	10K 1/10W	1	
	R2047	D0GB102JA008	1K 1/10W	1	
	R2048	D0GB101JA008	100 1/10W	1	
	R2049	D0GBR00JA008	0 1/10W	1	
	R2053	D0GB223JA008	22K 1/10W	1	
	R2055	D0GB104JA008	100K 1/10W	1	
	R2056	D0GB103JA008	10K 1/10W	1	
	R2057	D0GB331JA008	330 1/10W	1	
	R2058	D0GB103JA008	10K 1/10W	1	
	R2059	D0GB105JA008	1M 1/10W	1	
	R2060	D0GB332JA008	3.3K 1/10W	1	
	R2061	D0GB104JA008	100K 1/10W	1	
	R2062	D0GB471JA008	470 1/10W	1	
	R2064	D0GBR00JA008	0 1/10W	1	
	R2065	D0GB330JA008	33 1/10W	1	
	R2066	D0GBR00JA008	0 1/10W	1	
	R2067	D0GB153JA008	15K 1/10W	1	
	R2068	D0GB153JA008	15K 1/10W	1	
	R2069	D0GB103JA008	10K 1/10W	1	
	R2070	D0GB472JA008	4.7K 1/10W	1	
	R2071	D0GB392JA008	3.9K 1/10W	1	
	R2074	D0GBR00JA008	0 1/10W	1	
	R2075	D0GB472JA008	4.7K 1/10W	1	
	R2077	D0GB473JA008	47K 1/10W	1	
	R2078	D0GB101JA008	100 1/10W	1	
	R2081	D0GB103JA008	10K 1/10W	1	
	R2082	D0GB103JA008	10K 1/10W	1	
	R2083	D0GB473JA008	47K 1/10W	1	
	R2084	D0GB564JA008	560K 1/10W	1	
	R2086	D0GB104JA008	100K 1/10W	1	
	R2091	D0GB101JA008	100 1/10W	1	
	R2093	D0GB101JA008	100 1/10W	1	
	R2094	D0GB101JA008	100 1/10W	1	
	R2095	D0GB101JA008	100 1/10W	1	
	R2096	D0GB101JA008	100 1/10W	1	
	R2097	D0GB332JA008	3.3K 1/10W	1	
	R2105	D0GB103JA008	10K 1/10W	1	
	R2106	D0GB103JA008	10K 1/10W	1	
	R2107	D0GB103JA008	10K 1/10W	1	
	R2108	D0GB103JA008	10K 1/10W	1	
	R2109	D0GB103JA008	10K 1/10W	1	
	R2113	D0GB332JA008	3.3K 1/10W	1	
	R2114	D0GB683JA008	68K 1/10W	1	
	R2115	D0GB1R0JA008	1 1/10W	1	
	R2116	D0GB103JA008	10K 1/10W	1	
	R2117	D0GB103JA008	10K 1/10W	1	
	R2118	D0GB103JA008	10K 1/10W	1	
	R2119	D0GB103JA008	10K 1/10W	1	
	R2120	D0GB473JA008	47K 1/10W	1	
	R2124	D0GB471JA008	470 1/10W	1	
	R2125	D0GB471JA008	470 1/10W	1	
	R2126	D0GBR00JA008	0 1/10W	1	
	R2127	D0GBR00JA008	0 1/10W	1	
	R2128	D0GB183JA008	18K 1/10W	1	
	R2129	D0GBR00JA008	0 1/10W	1	
	R2130	D0GBR00JA008	0 1/10W	1	
	R2131	D0GB103JA008	10K 1/10W	1	

Safety	Ref. No.	Part No.	Part Name & Description	Qty	Remarks
	R2132	D0GB103JA008	10K 1/10W	1	
	R2133	D0GBR00JA008	0 1/10W	1	
	R2134	D0GBR00JA008	0 1/10W	1	
	R2135	D0GBR00JA008	0 1/10W	1	
	R2136	D0GBR00JA008	0 1/10W	1	
	R2138	D0GBR00JA008	0 1/10W	1	
	R2139	D0GB332JA008	3.3K 1/10W	1	
	R2140	D0GB332JA008	3.3K 1/10W	1	
	R2141	D0GB332JA008	3.3K 1/10W	1	
	R2142	D0GB332JA008	3.3K 1/10W	1	
	R2143	D0GBR00JA008	0 1/10W	1	
	R2144	D0GB472JA008	4.7K 1/10W	1	
	R2145	D0GB472JA008	4.7K 1/10W	1	
	R2150	D0GBR00JA008	0 1/10W	1	
	R2154	D0GBR00JA008	0 1/10W	1	
	R2155	D0GB681JA008	680 1/10W	1	
	R2156	D0GB473JA008	47K 1/10W	1	
	R2157	D0GB123JA008	12K 1/10W	1	
	R2158	D0GB2R2JA007	2.2 1/10W	1	
	R2159	D0GB2R2JA007	2.2 1/10W	1	
	R2160	D0GB2R2JA007	2.2 1/10W	1	
	R2161	D0GB123JA008	12K 1/10W	1	
	R2162	D0GB153JA008	15K 1/10W	1	
	R2163	D0GB271JA008	270 1/10W	1	
	R2167	D0GDR00JA017	0 1/8W	1	
	R2168	D0HB392ZA002	3.9K 1/16W	1	
	R2169	ERJ3RBD563V	56K 1/16W	1	
	R2170	ERJ3RBD103V	10K 1/16W	1	
	R2171	D0GB681JA008	680 1/10W	1	
	R2172	D0GB473JA008	47K 1/10W	1	
	R2173	D0GB123JA008	12K 1/10W	1	
	R2178	D0GB103JA008	10K 1/10W	1	
	R2179	D0GB274JA007	270K 1/10W	1	
	R2180	D0GB823JA008	82K 1/10W	1	
	R2181	D0GB274JA007	270K 1/10W	1	
	R2182	D0GB823JA008	82K 1/10W	1	
	R2183	D0GB682JA008	6.8K 1/10W	1	
	R2184	D0GB221JA007	220 1/10W	1	
	R2185	D0GB682JA008	6.8K 1/10W	1	
	R2186	D0GB221JA007	220 1/10W	1	
	R2187	D0GBR00JA008	0 1/10W	1	
	R2188	D0GB274JA007	270K 1/10W	1	
	R2190	D0GB104JA008	100K 1/10W	1	
	R2191	D0GB104JA008	100K 1/10W	1	
	R2192	D0GB101JA008	100 1/10W	1	
	R2193	D0GB101JA008	100 1/10W	1	
	R2196	D0GB474JA008	470K 1/10W	1	
	R2197	D0GB474JA008	470K 1/10W	1	
	R2199	D0GBR00JA008	0 1/10W	1	
	R2200	D0AF270JA039	27 1/4W	1	
	R2201	D0AF270JA039	27 1/4W	1	
	R2203	D0GBR00JA008	0 1/10W	1	
	R2204	D0GBR00JA008	0 1/10W	1	
	R2205	D0GDR00JA017	0 1/8W	1	
	R2206	D0GB103JA008	10K 1/10W	1	
	R2207	D0GB102JA008	1K 1/10W	1	
	R2208	D0GB101JA008	100 1/10W	1	
	R2209	D0GB392JA008	3.9K 1/10W	1	
	R2210	D0GB334JA008	330K 1/10W	1	
	R2211	D0GBR00JA008	0 1/10W	1	
	R2213	D0GB101JA008	100 1/10W	1	
	R2214	D0GB101JA008	100 1/10W	1	
	R2215	D0GB101JA008	100 1/10W	1	
	R2216	D0GB101JA008	100 1/10W	1	
	R2217	D0GB101JA008	100 1/10W	1	
	R2218	D0GB101JA008	100 1/10W	1	
	R2219	D0GB101JA008	100 1/10W	1	
	R2220	D0GB101JA008	100 1/10W	1	
	R2221	D0GB472JA008	4.7K 1/10W	1	
	R2222	D0GB103JA008	10K 1/10W	1	
	R2227	D0GBR00JA008	0 1/10W	1	
	R2228	D0GBR00JA008	0 1/10W	1	
	R2229	D0GB682JA008	6.8K 1/10W	1	

Safety	Ref. No.	Part No.	Part Name & Description	Qty	Remarks
	R2230	D0GB274JA007	270K 1/10W	1	
	R2231	D0GB823JA008	82K 1/10W	1	
	R2232	D0GB221JA007	220 1/10W	1	
	R2233	D0GB104JA008	100K 1/10W	1	
	R2234	D0GB474JA008	470K 1/10W	1	
	R2235	D0GB101JA008	100 1/10W	1	
	R2236	D0AF270JA039	27 1/4W	1	
	R2237	D0GB103JA008	10K 1/10W	1	
	R2278	D0GB821JA008	820 1/10W	1	
	R2279	D0GB101JA008	100 1/10W	1	
	R2503	D0GB100JA008	10 1/10W	1	
	R2524	D0GB223JA008	22K 1/10W	1	
	R2585	ERJ3GEYJ3R3V	3.3 1/10W	1	
	R2586	ERJ3GEYJ3R3V	3.3 1/10W	1	
	R2587	ERJ3GEYJ3R3V	3.3 1/10W	1	
	R2588	ERJ3GEYJ3R3V	3.3 1/10W	1	
	R2589	ERJ3GEYJ3R3V	3.3 1/10W	1	
	R2590	ERJ3GEYJ3R3V	3.3 1/10W	1	
	R2591	ERJ3GEYJ3R3V	3.3 1/10W	1	
	R2592	ERJ3GEYJ3R3V	3.3 1/10W	1	
	R2593	ERJ3GEYJ3R3V	3.3 1/10W	1	
	R2594	ERJ3GEYJ3R3V	3.3 1/10W	1	
	R2595	ERJ3GEYJ3R3V	3.3 1/10W	1	
	R2596	ERJ3GEYJ3R3V	3.3 1/10W	1	
	R2597	ERJ3GEYJ3R3V	3.3 1/10W	1	
	R2598	ERJ3GEYJ3R3V	3.3 1/10W	1	
	R2599	ERJ3GEYJ3R3V	3.3 1/10W	1	
	R2600	ERJ3GEYJ3R3V	3.3 1/10W	1	
	R2603	D0GB223JA008	22K 1/10W	1	
	R2606	D0GB100JA008	10 1/10W	1	
	R2612	D0GB101JA008	100 1/10W	1	
	R2613	D0GBR00JA008	0 1/10W	1	
	R2614	D0GBR00JA008	0 1/10W	1	
	R2619	D0GB223JA008	22K 1/10W	1	
	R2620	D0GB100JA008	10 1/10W	1	
	R2631	D0GBR00JA008	0 1/10W	1	
	R2632	D0GBR00JA008	0 1/10W	1	
	R2633	D0GB101JA008	100 1/10W	1	
	R2634	D0GB223JA008	22K 1/10W	1	
	R2635	D0GB100JA008	10 1/10W	1	
	R2653	D0GB104JA008	100K 1/10W	1	
	R2654	D0GB104JA008	100K 1/10W	1	
	R2655	D0GB104JA008	100K 1/10W	1	
	R2656	D0GB104JA008	100K 1/10W	1	
	R2657	D0GB104JA008	100K 1/10W	1	
	R2658	D0GB104JA008	100K 1/10W	1	
	R2659	D0GB104JA008	100K 1/10W	1	
	R2660	D0GB104JA008	100K 1/10W	1	
	R2661	D0GB104JA008	100K 1/10W	1	
	R2662	D0GB104JA008	100K 1/10W	1	
	R2663	D0GB104JA008	100K 1/10W	1	
	R2664	D0GB104JA008	100K 1/10W	1	
	R2667	D0GB822JA008	8.2K 1/10W	1	
	R2668	D0GB104JA008	100K 1/10W	1	
	R2669	D0GB223JA008	22K 1/10W	1	
	R2670	D0GB104JA008	100K 1/10W	1	
	R2671	D0GB472JA008	4.7K 1/10W	1	
	R3001	D0GB103JA008	10K 1/10W	1	
	R3002	D0GB101JA008	100 1/10W	1	
	R3003	D0GB101JA008	100 1/10W	1	
	R3004	D0GB101JA008	100 1/10W	1	
	R3005	D0GB101JA008	100 1/10W	1	
	R3006	D0GB101JA008	100 1/10W	1	
	R3007	D0GB101JA008	100 1/10W	1	
	R3010	D0GB473JA008	47K 1/10W	1	
	R3012	D0GBR00JA008	0 1/10W	1	
	R3013	D0GBR00JA008	0 1/10W	1	
	R3014	D0GBR00JA008	0 1/10W	1	
	R3015	D0GBR00JA008	0 1/10W	1	
	R3016	D0GBR00JA008	0 1/10W	1	
	R3017	D0GBR00JA008	0 1/10W	1	
	R3018	D0GBR00JA008	0 1/10W	1	
	R3019	D0GBR00JA008	0 1/10W	1	

Safety	Ref. No.	Part No.	Part Name & Description	Qty	Remarks
	R3020	D0GBR00JA008	0 1/10W	1	
	R3021	D0GBR00JA008	0 1/10W	1	
	R3022	D0GBR00JA008	0 1/10W	1	
	R3023	D0GBR00JA008	0 1/10W	1	
	R3024	D0GBR00JA008	0 1/10W	1	
	R3025	D0GBR00JA008	0 1/10W	1	
	R3026	D0GBR00JA008	0 1/10W	1	
	R3027	D0GBR00JA008	0 1/10W	1	
	R3028	D0GBR00JA008	0 1/10W	1	
	R3029	D0GB103JA008	10K 1/10W	1	
	R3031	D0GB103JA008	10K 1/10W	1	
	R3032	D0GB102JA008	1K 1/10W	1	
	R3033	D0GBR00JA008	0 1/10W	1	
	R3101	D0GB104JA008	100K 1/10W	1	
	R3102	D0GB331JA008	330 1/10W	1	
	R3104	D0GB273JA008	27K 1/10W	1	
	R3106	D0GBR00JA008	0 1/10W	1	
	R3110	D0GB331JA008	330 1/10W	1	
	R3111	D0GB104JA008	100K 1/10W	1	
	R3121	D0GBR00JA008	0 1/10W	1	
	R3122	D0GBR00JA008	0 1/10W	1	
	R3123	D0GBR00JA008	0 1/10W	1	
	R3124	D0GBR00JA008	0 1/10W	1	
	R3125	D0GBR00JA008	0 1/10W	1	
	R3126	D0GBR00JA008	0 1/10W	1	
	R3127	D0GBR00JA008	0 1/10W	1	
	R3128	D0GBR00JA008	0 1/10W	1	
	R3129	D0GBR00JA008	0 1/10W	1	
	R3130	D0GBR00JA008	0 1/10W	1	
	R3131	D0GB2R2JA007	2.2 1/10W	1	
	R3200	D0GB101JA008	100 1/10W	1	
	R3201	D0GB103JA008	10K 1/10W	1	
	R3202	D0GB823JA008	82K 1/10W	1	
	R3203	D0GB101JA008	100 1/10W	1	
	R3204	D0GB101JA008	100 1/10W	1	
	R3213	D0GB101JA008	100 1/10W	1	
	R3214	D0GB334JA008	330K 1/10W	1	
	R3215	D0GB392JA008	3.9K 1/10W	1	
	R3216	D0GB823JA008	82K 1/10W	1	
	R3217	D0GB101JA008	100 1/10W	1	
	R3218	D0GB101JA008	100 1/10W	1	
	R3219	D0GB101JA008	100 1/10W	1	
	R3220	D0GB103JA008	10K 1/10W	1	
	R3222	D0GB103JA008	10K 1/10W	1	
	R3223	D0GB103JA008	10K 1/10W	1	
	R3224	D0GB103JA008	10K 1/10W	1	
	R3225	D0GBR00JA008	0 1/10W	1	
	R3226	D0GB333JA008	33K 1/10W	1	
	R3227	D0GB562JA008	5.6K 1/10W	1	
	R3228	D0GB101JA008	100 1/10W	1	
	R3229	D0GB101JA008	100 1/10W	1	
	R3230	D0GBR00JA008	0 1/10W	1	
	R3232	D0GB101JA008	100 1/10W	1	
	R3235	D0GB101JA008	100 1/10W	1	
	R3236	D0GB330JA008	33 1/10W	1	
	R3237	D0GB101JA008	100 1/10W	1	
	R3302	D0GB124JA008	120K 1/10W	1	
	R3307	D0GBR00JA008	0 1/10W	1	
	R3308	D0GBR00JA008	0 1/10W	1	
	R3310	ERJ3RBD823V	82K 1/16W	1	
	R3311	ERJ3RBD104V	100K 1/16W	1	
	R3312	ERJ3RBD103V	10K 1/16W	1	
	R3313	D0GB682JA008	6.8K 1/10W	1	
	R3314	D0GB184JA008	180K 1/10W	1	
	R3322	D0GB681JA008	680 1/10W	1	
	R3323	D0GB103JA008	10K 1/10W	1	
	R3351	D0GBR00JA008	0 1/10W	1	
	R3353	D0GBR00JA008	0 1/10W	1	
	R3354	D0GB102JA008	1K 1/10W	1	
	R3355	ERJ3GEYJ185V	1.8M 1/10W	1	
	R3356	D0GB102JA008	1K 1/10W	1	
	R3357	ERJ3GEYJ185V	1.8M 1/10W	1	
	R3402	D0GBR00JA008	0 1/10W	1	

Safety	Ref. No.	Part No.	Part Name & Description	Qty	Remarks
	R3403	D0GBR00JA008	0 1/10W	1	
	R3405	D0GB103JA008	10K 1/10W	1	
	R3501	D0GBR00JA008	0 1/10W	1	
	R3612	D0GBR00JA008	0 1/10W	1	
	R3623	D0GBR00JA008	0 1/10W	1	
	R3631	D0GBR00JA008	0 1/10W	1	
	R3632	D0GBR00JA008	0 1/10W	1	
	R3641	D0GB101JA008	100 1/10W	1	
	R3643	D0GB101JA008	100 1/10W	1	
	R3645	D0GB101JA008	100 1/10W	1	
	R3647	D0GB101JA008	100 1/10W	1	
	R3649	D0GBR00JA008	0 1/10W	1	
	R3650	D0GBR00JA008	0 1/10W	1	
	R3651	D0GBR00JA008	0 1/10W	1	
	R3652	D0GBR00JA008	0 1/10W	1	
	R3653	D0GBR00JA008	0 1/10W	1	
	R3654	D0GBR00JA008	0 1/10W	1	
	R3655	D0GBR00JA008	0 1/10W	1	
	R3656	D0GBR00JA008	0 1/10W	1	
	R3657	D0GBR00JA008	0 1/10W	1	
	R3658	D0GBR00JA008	0 1/10W	1	
	R3659	D0GB100JA008	10 1/10W	1	
	R3660	D0GB100JA008	10 1/10W	1	
	R3661	D0GB100JA008	10 1/10W	1	
	R3662	D0GB100JA008	10 1/10W	1	
	R3663	D0GB100JA008	10 1/10W	1	
	R3664	D0GB100JA008	10 1/10W	1	
	R3665	D0GB100JA008	10 1/10W	1	
	R3667	D0GB100JA008	10 1/10W	1	
	R4000	D0GB222JA008	2.2K 1/10W	1	
	R5700	D0GB223JA065	22K 1/10W	1	
	R5702	D0GZ104JA012	100K 1W	1	
	R5703	D0GZ104JA012	100K 1W	1	
	R5704	D0GF224JA048	220K 1/4W	1	
	R5705	D0GF224JA048	220K 1/4W	1	
	R5706	D0GD824JA052	820K 1/8W	1	
⚠	R5708	D0GF155JA048	1.5M 1/4W	1	
⚠	R5709	D0GF155JA048	1.5M 1/4W	1	
	R5710	D0GB394JA065	390K 1/10W	1	
	R5711	D0GF100JA048	10 1/4W	1	
	R5712	D0GF103JA048	10K 1/4W	1	
	R5713	D0GF331JA048	330 1/4W	1	
	R5714	ERX2SZJR15P	0.15 2W	1	
	R5715	D0GZ104JA012	100K 1W	1	
	R5716	D0GZ104JA012	100K 1W	1	
	R5717	D0GZ104JA012	100K 1W	1	
	R5718	D0GZ104JA012	100K 1W	1	
	R5720	D0GD220JA052	22 1/8W	1	
	R5721	D0GD103JA052	10K 1/8W	1	
	R5722	D0GD122JA052	1.2K 1/8W	1	
	R5723	D0GB102JA065	1K 1/10W	1	
	R5724	D0GD121JA052	120 1/8W	1	
	R5726	ERX2SZJR15P	0.15 2W	1	
	R5728	D0GB104JA065	100K 1/10W	1	
	R5729	D0GD103JA052	10K 1/8W	1	
	R5730	D0GB102JA065	1K 1/10W	1	
	R5732	D0GD101JA052	100 1/8W	1	
	R5733	D0GB473JA065	47K 1/10W	1	
	R5786	D0GZ204JA012	200K 1W	1	
	R5795	D0GD474JA052	470K 1/8W	1	
	R5797	D0GB153JA065	15K 1/10W	1	
	R5798	D0GD220JA052	22 1/8W	1	
	R5802	D1BB8202A074	82 1/10W	1	
	R5805	D1BB5601A074	56 1/10W	1	
	R5806	D1BB1502A074	15 1/10W	1	
	R5807	D0GD182JA052	1.8K 1/8W	1	
	R5808	D0GD222JA052	2.2K 1/8W	1	
	R5810	D0GB331JA065	330 1/10W	1	
	R5814	D0GB104JA065	100K 1/10W	1	
	R5865	D1BD1800A066	18 1/8W	1	
	R5890	D0GB222JA065	2.2K 1/10W	1	
	R5891	D1BB3302A074	33 1/10W	1	
	R5892	D1BB1001A074	10 1/10W	1	

Safety	Ref. No.	Part No.	Part Name & Description	Qty	Remarks
	R5893	D1BB1002A074	10 1/10W	1	
	R5894	D0GB151JA065	150 1/10W	1	
	R5895	D0GB153JA065	15K 1/10W	1	
	R5896	D0GB104JA065	100K 1/10W	1	
	R5897	D0GB101JA065	100 1/10W	1	
	R5898	D1BB1002A074	10 1/10W	1	
	R5901	ERG2SJ471E	470 2W	1	
	R5902	ERG2SJ471E	470 2W	1	
	R5903	ERG2SJ471E	470 2W	1	
	R5904	ERG2SJ471E	470 2W	1	
	R5905	ERG2SJ471E	470 2W	1	
	R5906	ERG2SJ471E	470 2W	1	
	R5907	ERG2SJ471E	470 2W	1	
	R5908	ERG2SJ471E	470 2W	1	
	R5909	D0GB102JA065	1K 1/10W	1	
	R6006	D0GB122JA008	1.2K 1/10W	1	
	R6007	D0GB152JA008	1.5K 1/10W	1	
	R6008	D0GB222JA008	2.2K 1/10W	1	
	R6009	D0GB332JA008	3.3K 1/10W	1	
	R6010	D0GB472JA008	4.7K 1/10W	1	
	R6011	D0GB682JA008	6.8K 1/10W	1	
	R6013	D0GB103JA008	10K 1/10W	1	
	R6015	D0GBR00JA008	0 1/10W	1	
	R6016	D0GB221JA007	220 1/10W	1	
	R6017	D0GB471JA008	470 1/10W	1	
	R6018	D0GB221JA007	220 1/10W	1	
	R6020	D0GBR00JA008	0 1/10W	1	
	R6022	D0GBR00JA008	0 1/10W	1	
	R6023	D0GB823JA008	82K 1/10W	1	
	R6025	D0GB562JA008	5.6K 1/10W	1	
	R6026	D0GB220JA008	22 1/10W	1	
	R6028	D0GB1R0JA008	1 1/10W	1	
	R6029	D0GB473JA008	47K 1/10W	1	
	R6030	D0GB1R0JA008	1 1/10W	1	
	R6032	D0GB100JA008	10 1/10W	1	
	R6033	D0GB223JA008	22K 1/10W	1	
	R6034	D0GB153JA008	15K 1/10W	1	
	R6100	D0GB122JA008	1.2K 1/10W	1	
	R6101	D0GB152JA008	1.5K 1/10W	1	
	R6102	D0GB222JA008	2.2K 1/10W	1	
	R6103	D0GB332JA008	3.3K 1/10W	1	
	R6104	D0GB472JA008	4.7K 1/10W	1	
	R6105	D0GB682JA008	6.8K 1/10W	1	
	R6106	D0GB153JA008	15K 1/10W	1	
	R6107	D0GB473JA008	47K 1/10W	1	
	R6109	D0GB103JA008	10K 1/10W	1	
	R6110	D0GB103JA008	10K 1/10W	1	
	R6111	D0GB103JA008	10K 1/10W	1	
	R6114	D0GB681JA008	680 1/10W	1	
	R6115	D0GB681JA008	680 1/10W	1	
	R6116	D0GB681JA008	680 1/10W	1	
	R6200	D0GB122JA008	1.2K 1/10W	1	
	R6201	D0GB152JA008	1.5K 1/10W	1	
	R6202	D0GB222JA008	2.2K 1/10W	1	
	R6203	D0GB332JA008	3.3K 1/10W	1	
	R6204	D0GB472JA008	4.7K 1/10W	1	
	R6205	D0GB682JA008	6.8K 1/10W	1	
	R6206	D0GB153JA008	15K 1/10W	1	
	R6207	D0GB473JA008	47K 1/10W	1	
	R6208	D0GB103JA008	10K 1/10W	1	
	R6209	D0GB103JA008	10K 1/10W	1	
	R6211	D0GB103JA008	10K 1/10W	1	
	R6300	D0GB101JA008	100 1/10W	1	
	R6301	D0GB682JA008	6.8K 1/10W	1	
	R6302	D0GB104JA008	100K 1/10W	1	
	R6303	D0GB472JA008	4.7K 1/10W	1	
	R6304	D0GB153JA008	15K 1/10W	1	
	R6305	D0GB331JA008	330 1/10W	1	
	R6306	D0GB561JA008	560 1/10W	1	
	R6307	D0GB681JA008	680 1/10W	1	
	R6700	D0GBR00JA008	0 1/10W	1	
	R6701	D0GBR00JA008	0 1/10W	1	
	R6702	D0GBR00JA008	0 1/10W	1	

Safety	Ref. No.	Part No.	Part Name & Description	Qty	Remarks
	R8001	ERJ2GE0R00X	0 1/16W	1	
	R8002	D0GB103JA065	10K 1/10W	1	
	R8005	D0GB105JA065	1M 1/10W	1	
	R8006	D0GB221JA065	220 1/10W	1	
	R8010	D0GA104JA023	100K 1/16W	1	
	R8011	D0GA104JA023	100K 1/16W	1	
	R8013	D0GB330JA008	33 1/10W	1	
	R8014	D0GB330JA008	33 1/10W	1	
	R8021	D0GA330JA023	33 1/16W	1	
	R8022	D0GB100JA065	10 1/10W	1	
	R8025	ERJ2GE0R00X	0 1/16W	1	
	R8026	ERJ2GE0R00X	0 1/16W	1	
	R8027	D0GB100JA065	10 1/10W	1	
	R8031	D0GA103JA023	10K 1/16W	1	
	R8032	D0GBR00J0004	0 1/10W	1	
	R8042	D0GA103JA023	10K 1/16W	1	
	R8043	ERJ2GE0R00X	0 1/16W	1	
	R8044	ERJ2GE0R00X	0 1/16W	1	
	R8045	ERJ2GE0R00X	0 1/16W	1	
	R8046	D0GB103JA065	10K 1/10W	1	
	R8047	D0GB103JA065	10K 1/10W	1	
	R8209	D0GB225JA065	2.2M 1/10W	1	
	R8210	D0GB821JA065	820 1/10W	1	
	R8211	D0GB272JA065	2.7K 1/10W	1	
	R8212	D0GB4R7JA065	4.7 1/10W	1	
	R8214	D0GB103JA065	10K 1/10W	1	
	R8215	D0GB5R6JA065	5.6 1/10W	1	
	R8251	D0GB330JA065	33 1/10W	1	
	R8252	D0GB102JA065	1K 1/10W	1	
	R8254	D0GB562JA065	5.6K 1/10W	1	
	R8255	D0GB332JA065	3.3K 1/10W	1	
	R8256	D0GB101JA065	100 1/10W	1	
	R8257	D0GB562JA065	5.6K 1/10W	1	
	R8258	D0GB273JA065	27K 1/10W	1	
	R8259	D0GB472JA065	4.7K 1/10W	1	
	R8260	D0GB473JA065	47K 1/10W	1	
	R8261	D0GB101JA065	100 1/10W	1	
	R8262	D0GB100JA065	10 1/10W	1	
	R8263	D0GB102JA065	1K 1/10W	1	
	R8264	D0GB122JA065	1.2K 1/10W	1	
	R8265	D0GB104JA065	100K 1/10W	1	
	R8301	D0GBR00J0004	0 1/10W	1	
	R8302	D0GBR00J0004	0 1/10W	1	
	R8501	ERJ2GE0R00X	0 1/16W	1	
	R8502	D0GA473JA023	47K 1/16W	1	
	R8503	D0GA473JA023	47K 1/16W	1	
	R8504	D0GA473JA023	47K 1/16W	1	
	R8505	D0GA473JA023	47K 1/16W	1	
	R8506	D0GA473JA023	47K 1/16W	1	
	R8507	D0GA473JA023	47K 1/16W	1	
	R9001	ERJ2RKD300X	30 1/16W	1	
	R9002	ERJ2RKD300X	30 1/16W	1	
	R9003	D0GA153JA023	15K 1/16W	1	
	R9004	D0GA153JA023	15K 1/16W	1	
	R9005	ERJ2RKD300X	30 1/16W	1	
	R9006	ERJ2RKD300X	30 1/16W	1	
	R9007	D0GA153JA023	15K 1/16W	1	
	R9008	D0GA153JA023	15K 1/16W	1	
			CAPACITORS		
	C2000	F1H1H104B047	0.1uF 50V	1	
	C2004	F1H1H102B047	1000pF 50V	1	
	C2005	F1H1E105A153	1uF 25V	1	
	C2006	F1J1A106A043	10uF 10V	1	
	C2007	F1H1E105A153	1uF 25V	1	
	C2008	F1J1A106A043	10uF 10V	1	
	C2009	F1H1C474A178	0.47uF 16V	1	
	C2010	F1H1H104B047	0.1uF 50V	1	
	C2011	F1H1H104B047	0.1uF 50V	1	
	C2012	F1H1H104B047	0.1uF 50V	1	
	C2013	F1H1H104B047	0.1uF 50V	1	
	C2016	F1H1E105A153	1uF 25V	1	

Safety	Ref. No.	Part No.	Part Name & Description	Qty	Remarks
	C2017	F1H1H561B052	560pF 50V	1	
	C2018	F1H1H104B047	0.1uF 50V	1	
	C2019	F1G1C104A077	0.1uF 16V	1	
	C2020	F1H1H561B052	560pF 50V	1	
	C2021	F1H1E105A153	1uF 25V	1	
	C2024	F1H1E105A153	1uF 25V	1	
	C2025	F1H1E105A153	1uF 25V	1	
	C2026	F1H1E105A153	1uF 25V	1	
	C2027	F1H1E105A153	1uF 25V	1	
	C2029	F1H1H104B047	0.1uF 50V	1	
	C2030	F1H1H104B047	0.1uF 50V	1	
	C2031	F1H1E105A153	1uF 25V	1	
	C2032	F1H1H104B047	0.1uF 50V	1	
	C2033	F1H1H104B047	0.1uF 50V	1	
	C2034	F1H1H104B047	0.1uF 50V	1	
	C2035	F1H1H120A889	12pF 50V	1	
	C2036	F1J1A106A043	10uF 10V	1	
	C2037	F1H1H102B047	1000pF 50V	1	
	C2038	F1J1A106A043	10uF 10V	1	
	C2040	F1J1A106A043	10uF 10V	1	
	C2041	F1H1H120A889	12pF 50V	1	
	C2042	F1H1H104B047	0.1uF 50V	1	
	C2043	F1H1H102B047	1000pF 50V	1	
	C2044	F1J1A106A043	10uF 10V	1	
	C2045	F1J1A106A043	10uF 10V	1	
	C2046	F1H1H470B052	47pF 50V	1	
	C2047	F1H1H470B052	47pF 50V	1	
	C2048	F1H1H102B047	1000pF 50V	1	
	C2049	F1H1H102B047	1000pF 50V	1	
	C2050	F1H1E105A153	1uF 25V	1	
	C2051	F1J1A106A043	10uF 10V	1	
	C2052	F1H1H180A230	18pF 50V	1	
	C2053	F1H1H180A230	18pF 50V	1	
	C2054	F1H1H104B047	0.1uF 50V	1	
	C2055	F1H1H104B047	0.1uF 50V	1	
	C2056	F1H1H104B047	0.1uF 50V	1	
	C2057	F2A0J2220055	2200uF 6.3V	1	
	C2058	F1J1A106A043	10uF 10V	1	
	C2059	F1H1E105A153	1uF 25V	1	
	C2060	F1H1H104B047	0.1uF 50V	1	
	C2061	F1H1H104B047	0.1uF 50V	1	
	C2062	F1H1H473B047	0.047uF 50V	1	
	C2063	F1H1H473B047	0.047uF 50V	1	
	C2064	F2A1H3R3A213	3.3uF 50V	1	
	C2065	F1H1H472B047	4700pF 50V	1	
	C2066	F1H1H472B047	4700pF 50V	1	
	C2067	F1H1H103B047	0.01uF 50V	1	
	C2068	F1H1H103B047	0.01uF 50V	1	
	C2069	F1J1A106A043	10uF 10V	1	
	C2074	F1H1H104B047	0.1uF 50V	1	
	C2075	F1H1H104B047	0.1uF 50V	1	
	C2076	F1H1H104B047	0.1uF 50V	1	
	C2077	F1H1H331B052	330pF 50V	1	
	C2078	F1J1A106A043	10uF 10V	1	
	C2080	F1J1A106A043	10uF 10V	1	
	C2081	F1J1A106A043	10uF 10V	1	
	C2082	F1H1H104B047	0.1uF 50V	1	
	C2084	F1J1A106A043	10uF 10V	1	
	C2085	F2A0J102A247	1000uF 6.3V	1	
	C2086	F1H1H104B047	0.1uF 50V	1	
	C2087	F2A1A221B161	220uF 10V	1	
	C2088	F1J1A106A043	10uF 10V	1	
	C2089	F2A1A101B138	100uF 10V	1	
	C2090	F1J1A106A043	10uF 10V	1	
	C2092	F1H1H472B047	4700pF 50V	1	
	C2094	F2A0J101A181	100uF 6.3V	1	
	C2095	F2A0J101A181	100uF 6.3V	1	
	C2096	F2A1E330B389	33uF 25V	1	
	C2097	F1H1H104B047	0.1uF 50V	1	
	C2098	F1H1H104B047	0.1uF 50V	1	
	C2099	F1H1E105A153	1uF 25V	1	
	C2100	F1H1E105A153	1uF 25V	1	
	C2101	F1H1E105A153	1uF 25V	1	

Safety	Ref. No.	Part No.	Part Name & Description	Qty	Remarks
	C2102	F1J1A106A043	10uF 10V	1	
	C2103	F1H1H103B047	0.01uF 50V	1	
	C2104	F1K1H475A256	4.7uF 50V	1	
	C2105	F2A0J221B034	220uF 6.3V	1	
	C2106	F2A0J221B034	220uF 6.3V	1	
	C2107	F1H1H104B047	0.1uF 50V	1	
	C2108	F1H1H103B047	0.01uF 50V	1	
	C2109	F1K1H475A256	4.7uF 50V	1	
	C2110	F1J1A106A043	10uF 10V	1	
	C2111	F1H1E105A153	1uF 25V	1	
	C2112	F1H1E105A153	1uF 25V	1	
	C2113	F1J1A106A043	10uF 10V	1	
	C2114	F1J1A106A043	10uF 10V	1	
	C2115	F1H1E105A153	1uF 25V	1	
	C2116	F2A0J101A181	100uF 6.3V	1	
	C2117	F1H1E105A153	1uF 25V	1	
	C2118	F2A0J221B034	220uF 6.3V	1	
	C2119	F1H1H103B047	0.01uF 50V	1	
	C2187	F1H1H103A219	0.01uF 50V	1	
	C2188	F2A1C221B456	220uF 16V	1	
	C2191	F1H1H103A219	0.01uF 50V	1	
	C2500	F2A1C330B453	33uF 16V	1	
	C2504	F1J1C106A059	10uF 16V	1	
	C2508	F1H1H104B047	0.1uF 50V	1	
	C2509	F1H1H104B047	0.1uF 50V	1	
	C2521	F1H1H104B047	0.1uF 50V	1	
	C2522	F1H1H104B047	0.1uF 50V	1	
	C2523	F1H1H104B047	0.1uF 50V	1	
	C2524	F1H1H104B047	0.1uF 50V	1	
	C2525	F1H1H104B047	0.1uF 50V	1	
	C2526	F1H1H104B047	0.1uF 50V	1	
	C2527	F1H1H104B047	0.1uF 50V	1	
	C2528	F1H1H104B047	0.1uF 50V	1	
	C2529	F1H1H104B047	0.1uF 50V	1	
	C2530	F1H1H104B047	0.1uF 50V	1	
	C2541	F1H1H333B055	0.033uF 50V	1	
	C2542	F1H1H333B055	0.033uF 50V	1	
	C2543	F1H1H333B055	0.033uF 50V	1	
	C2544	F1H1H333B055	0.033uF 50V	1	
	C2545	F1H1H333B055	0.033uF 50V	1	
	C2546	F1H1H333B055	0.033uF 50V	1	
	C2547	F1H1H333B055	0.033uF 50V	1	
	C2548	F1H1H333B055	0.033uF 50V	1	
	C2549	F1H1H333B055	0.033uF 50V	1	
	C2550	F1H1H333B055	0.033uF 50V	1	
	C2551	F1H1H333B055	0.033uF 50V	1	
	C2552	F1H1H333B055	0.033uF 50V	1	
	C2561	F1K1H105A138	1uF 50V	1	
	C2562	F1H1H104B047	0.1uF 50V	1	
	C2563	F1H1H104B047	0.1uF 50V	1	
	C2564	F1K1H105A138	1uF 50V	1	
	C2571	F1K1H105A138	1uF 50V	1	
	C2572	F1K1H105A138	1uF 50V	1	
	C2597	F1J1H2240017	0.22uF 50V	1	
	C2598	F1J1H2240017	0.22uF 50V	1	
	C2599	F1J1H2240017	0.22uF 50V	1	
	C2600	F1J1H2240017	0.22uF 50V	1	
	C2601	F1J1H2240017	0.22uF 50V	1	
	C2602	F1J1H2240017	0.22uF 50V	1	
	C2603	F1J1H2240017	0.22uF 50V	1	
	C2604	F1J1H2240017	0.22uF 50V	1	
	C2607	F1J1H2240017	0.22uF 50V	1	
	C2608	F1J1H2240017	0.22uF 50V	1	
	C2611	F1J1H2240017	0.22uF 50V	1	
	C2612	F1J1H2240017	0.22uF 50V	1	
	C2631	F1J1A106A043	10uF 10V	1	
	C2632	F1J1A106A043	10uF 10V	1	
	C2633	F1H1E105A153	1uF 25V	1	
	C2646	F1H1H103B047	0.01uF 50V	1	
	C2647	F1H1H103B047	0.01uF 50V	1	
	C2648	F1H1H103B047	0.01uF 50V	1	
	C2649	F1H1H103B047	0.01uF 50V	1	
	C2650	F1H1H103B047	0.01uF 50V	1	

Safety	Ref. No.	Part No.	Part Name & Description	Qty	Remarks
	C2651	F1H1H103B047	0.01uF 50V	1	
	C2652	F1H1H103B047	0.01uF 50V	1	
	C2653	F1H1H103B047	0.01uF 50V	1	
	C2654	F1H1H103B047	0.01uF 50V	1	
	C2655	F1H1H103B047	0.01uF 50V	1	
	C2656	F1H1H103B047	0.01uF 50V	1	
	C2657	F1H1H103B047	0.01uF 50V	1	
	C2658	F1H1H103B047	0.01uF 50V	1	
	C2659	F1H1H103B047	0.01uF 50V	1	
	C2660	F1H1H103B047	0.01uF 50V	1	
	C2661	F1H1H103B047	0.01uF 50V	1	
	C2662	D0GBR00J0004	0 1/10W	1	
	C2679	D0GBR00J0004	0 1/10W	1	
	C2680	F1H1H102B047	1000pF 50V	1	
	C2681	F1H1H102B047	1000pF 50V	1	
	C2682	F1H1H102B047	1000pF 50V	1	
	C2683	F1H1H102B047	1000pF 50V	1	
	C2684	F1H1H102B047	1000pF 50V	1	
	C2685	F1H1H102B047	1000pF 50V	1	
	C2686	F1H1H102B047	1000pF 50V	1	
	C2687	F1H1H102B047	1000pF 50V	1	
	C2688	F1H1H102B047	1000pF 50V	1	
	C2689	F1H1H102B047	1000pF 50V	1	
	C2690	F1H1H102B047	1000pF 50V	1	
	C2691	F1H1H102B047	1000pF 50V	1	
	C2692	F1H1H102B047	1000pF 50V	1	
	C2693	F1H1H102B047	1000pF 50V	1	
	C2694	F1H1H102B047	1000pF 50V	1	
	C2695	F1H1H102B047	1000pF 50V	1	
	C2701	F1J1C106A059	10uF 16V	1	
	C2706	F1K1H105A138	1uF 50V	1	
	C2707	F1K1H105A138	1uF 50V	1	
	C2708	F1H1H104B047	0.1uF 50V	1	
	C2709	F1H1H104B047	0.1uF 50V	1	
	C2710	F1J1C106A059	10uF 16V	1	
	C2711	F1H1H104B047	0.1uF 50V	1	
	C2712	F1H1H104B047	0.1uF 50V	1	
	C2713	F1H1H104B047	0.1uF 50V	1	
	C2714	F1H1H104B047	0.1uF 50V	1	
	C2715	F1H1H104B047	0.1uF 50V	1	
	C2716	F1H1H104B047	0.1uF 50V	1	
	C2721	F1K1H105A138	1uF 50V	1	
	C2722	F1K1H105A138	1uF 50V	1	
	C2723	F1H1H104B047	0.1uF 50V	1	
	C2724	F1H1H104B047	0.1uF 50V	1	
	C2725	F1J1C106A059	10uF 16V	1	
	C2726	F1H1H104B047	0.1uF 50V	1	
	C2727	F1H1H104B047	0.1uF 50V	1	
	C2728	F1H1H104B047	0.1uF 50V	1	
	C2729	F1H1H104B047	0.1uF 50V	1	
	C2730	F1H1H104B047	0.1uF 50V	1	
	C2731	F1H1H104B047	0.1uF 50V	1	
	C2732	F1H1H333B055	0.033uF 50V	1	
	C2733	F1H1H333B055	0.033uF 50V	1	
	C2734	F1H1H333B055	0.033uF 50V	1	
	C2735	F1H1H333B055	0.033uF 50V	1	
	C2740	F1K1H105A138	1uF 50V	1	
	C2741	F1K1H105A138	1uF 50V	1	
	C2742	F1H1H104B047	0.1uF 50V	1	
	C2743	F1H1H104B047	0.1uF 50V	1	
	C2744	F1K1H105A138	1uF 50V	1	
	C2745	F1K1H105A138	1uF 50V	1	
	C2746	F1K1H105A138	1uF 50V	1	
	C2747	F1K1H105A138	1uF 50V	1	
	C2748	F1K1H105A138	1uF 50V	1	
	C2749	F1K1H105A138	1uF 50V	1	
	C2750	ECQV1H474JL3	0.47uF 50V	1	
	C2751	ECQV1H474JL3	0.47uF 50V	1	
	C2752	ECQV1H474JL3	0.47uF 50V	1	
	C2753	ECQV1H474JL3	0.47uF 50V	1	
	C2754	ECQV1H474JL3	0.47uF 50V	1	
	C2757	ECQV1H474JL3	0.47uF 50V	1	
	C3000	F1H1H104B047	0.1uF 50V	1	

Safety	Ref. No.	Part No.	Part Name & Description	Qty	Remarks
	C3001	F1H1E105A153	1uF 25V	1	
	C3002	F1H1H104B047	0.1uF 50V	1	
	C3101	F1H1H104B047	0.1uF 50V	1	
	C3200	F1H1H473B047	0.047uF 50V	1	
	C3201	F1H1H473B047	0.047uF 50V	1	
	C3207	F1H1H473B047	0.047uF 50V	1	
	C3208	F1J1A106A043	10uF 10V	1	
	C3209	F1H1H473B047	0.047uF 50V	1	
	C3210	F1H1E105A153	1uF 25V	1	
	C3211	F1H1E105A153	1uF 25V	1	
	C3212	F2A1C100A234	10uF 16V	1	
	C3214	F2A1C100A234	10uF 16V	1	
	C3215	F1H1H103B047	0.01uF 50V	1	
	C3216	F1H1H473B047	0.047uF 50V	1	
	C3217	F1H1H473B047	0.047uF 50V	1	
	C3218	F1H1H180A230	18pF 50V	1	
	C3219	F1J1A106A043	10uF 10V	1	
	C3220	F2A1A221B161	220uF 10V	1	
	C3221	F1H1H103B047	0.01uF 50V	1	
	C3222	F1H1H103B047	0.01uF 50V	1	
	C3223	F1H1H470B052	47pF 50V	1	
	C3224	F1H1H470B052	47pF 50V	1	
	C3300	F2A1H1020067	1000uF 50V	1	
	C3302	F1H1H562B047	5600pF 50V	1	
	C3303	F1H1H103B047	0.01uF 50V	1	
	C3306	F1K1E106A078	10uF 25V	1	
	C3307	F2A0J102A247	1000uF 6.3V	1	
	C3308	F1H1H104B047	0.1uF 50V	1	
	C3309	F1H1H104B047	0.1uF 50V	1	
	C3310	F1H1H104B047	0.1uF 50V	1	
	C3351	F1H1H104B047	0.1uF 50V	1	
	C3352	F1H1H104B047	0.1uF 50V	1	
	C3353	F1H1H104B047	0.1uF 50V	1	
	C3354	F1J1A106A043	10uF 10V	1	
	C3355	F2A1A101B138	100uF 10V	1	
	C3356	F1H1H331B052	330pF 50V	1	
	C3357	F1H1H331B052	330pF 50V	1	
	C3402	F2A0J221B034	220uF 6.3V	1	
⚠	C5701	F0CAF104A105	0.1uF	1	
⚠	C5702	F0CAF104A105	0.1uF	1	
⚠	C5703	F0CAF104A105	0.1uF	1	
⚠	C5704	F1BAF471A013	470pF	1	
⚠	C5705	F1BAF471A013	470pF	1	
⚠	C5707	F1BAF471A013	470pF	1	
⚠	C5708	F1BAF471A013	470pF	1	
	C5709	F1H1H102B047	1000pF 50V	1	
	C5711	F2B2E1020008	1000uF 250V	1	
	C5712	F2B2E1020008	1000uF 250V	1	
	C5713	F0C3A4720001	4700pF 1000V	1	
	C5720	F1H1H101B052	100pF 50V	1	
	C5721	F1H1H221B047	220pF 50V	1	
	C5722	F1H1H102B047	1000pF 50V	1	
	C5723	F1H1H471A219	470pF 50V	1	
	C5724	F2A1H5600009	56uF 50V	1	
	C5725	F1H1H104B047	0.1uF 50V	1	
	C5726	F1H1H104B047	0.1uF 50V	1	
	C5728	F1H1H102B047	1000pF 50V	1	
	C5730	F1H1E105A153	1uF 25V	1	
	C5737	F1B3D222A084	2200pF 2000V	1	
	C5790	F1K2J2220002	2200pF 630V	1	
	C5794	F1H1H102B047	1000pF 50V	1	
	C5795	F1K1H105A251	1uF 50V	1	
	C5796	F1H1H104B047	0.1uF 50V	1	
	C5798	F2A1E221B422	220uF 25V	1	
	C5800	D0GDR00J0004	0 1/8W	1	
	C5808	F2A1H682C089	6800uF 50V	1	
	C5812	F1H1H104B047	0.1uF 50V	1	
	C5813	F2A1H331B416	330uF 50V	1	
	C5817	F2A1H3R3A213	3.3uF 50V	1	
	C5818	F1H1H104B047	0.1uF 50V	1	
	C5826	D0GDR00J0004	0 1/8W	1	
	C5832	F1H1H104B047	0.1uF 50V	1	

Safety	Ref. No.	Part No.	Part Name & Description	Qty	Remarks
	C5839	F1K2J1030001	0.01uF 630V	1	
	C5842	F1K2J1030001	0.01uF 630V	1	
	C5895	F1H1H104B047	0.1uF 50V	1	
	C5896	F1H1H104B047	0.1uF 50V	1	
	C5897	F1H1H103B047	0.01uF 50V	1	
	C5898	F1H1H104B047	0.1uF 50V	1	
	C5899	F2A1A221B161	220uF 10V	1	
	C5900	F1J1A106A043	10uF 10V	1	
	C6002	F1H1H104B047	0.1uF 50V	1	
	C6003	F1H1H102B047	1000pF 50V	1	
	C6004	F1H1H102B047	1000pF 50V	1	
	C6005	F1H1H102B047	1000pF 50V	1	
	C6006	F1H1H102B047	1000pF 50V	1	
	C6007	F1H1H102B047	1000pF 50V	1	
	C6008	F1H1H331B052	330pF 50V	1	
	C6009	F1H1H102B047	1000pF 50V	1	
	C6010	F1H1H331B052	330pF 50V	1	
	C6011	F1H1H102B047	1000pF 50V	1	
	C6012	F1H1H331B052	330pF 50V	1	
	C6013	F1H1H102B047	1000pF 50V	1	
	C6014	F1H1H102B047	1000pF 50V	1	
	C6015	F1H1H102B047	1000pF 50V	1	
	C6016	F1H1H102B047	1000pF 50V	1	
	C6017	F1H1H102B047	1000pF 50V	1	
	C6018	F1H1H102B047	1000pF 50V	1	
	C6021	F2A1E221B422	220uF 25V	1	
	C6022	F1H1H472A219	4700pF 50V	1	
	C6023	F2A1H470B412	47uF 50V	1	
	C6024	F2A1C101A115	100uF 16V	1	
	C6025	F1H1H104B047	0.1uF 50V	1	
	C6026	F2A1H220B411	22uF 50V	1	
	C6101	F1H1H101B052	100pF 50V	1	
	C6102	F1H1H101B052	100pF 50V	1	
	C6103	F2A1A220A011	22uF 10V	1	
	C6201	F1H1H101B052	100pF 50V	1	
	C6202	F1H1H101B052	100pF 50V	1	
	C6300	F2A1H4R7A213	4.7uF 50V	1	
	C6302	F2A1C100A207	10uF 16V	1	
	C6303	F1H1H470B052	47pF 50V	1	
	C6304	F2A1HR10A015	0.10uF 50V	1	
	C6305	F2A1C100A234	10uF 16V	1	
	C6306	F1H1H472A219	4700pF 50V	1	
	C6307	F2A1H4R7A213	4.7uF 50V	1	
	C6309	F2A1H1R0A213	1.0uF 50V	1	
	C6310	F2A1H1R0A213	1.0uF 50V	1	
	C6311	F1H1H153A219	0.015uF 50V	1	
	C6313	F2A1HR10A015	0.10uF 50V	1	
	C6314	F2A1H2R2A234	2.2uF 50V	1	
	C6315	F1H1H102B047	1000pF 50V	1	
	C6316	F1H1H103B047	0.01uF 50V	1	
	C6317	F1H1H331B052	330pF 50V	1	
	C6318	F1H1H331B052	330pF 50V	1	
	C6319	F1H1H103B047	0.01uF 50V	1	
	C6320	F1H1H103B047	0.01uF 50V	1	
	C6321	F1H1H103B047	0.01uF 50V	1	
	C6322	F1H1H103B047	0.01uF 50V	1	
	C6323	F1H1H391A889	390pF 50V	1	
	C6324	F1H1H103B047	0.01uF 50V	1	
	C6500	F1H1H101B052	100pF 50V	1	
	C6501	F1H1H102A219	1000pF 50V	1	
	C6502	F2A1A220A011	22uF 10V	1	
	C8007	F1H1A334A025	0.33uF 10V	1	
	C8008	F1H1H223A219	0.022uF 50V	1	
	C8009	F1H1H680A230	68pF 50V	1	
	C8010	F1G1A1040006	0.1uF 10V	1	
	C8011	F1H1C104A008	0.1uF 16V	1	
	C8012	F1G1A1040006	0.1uF 10V	1	
	C8013	F2A0J101A181	100uF 6.3V	1	
	C8014	F1H1H103A885	0.01uF 50V	1	
	C8015	F1G1H120A565	12pF 50V	1	
	C8016	F1G1H120A565	12pF 50V	1	
	C8017	F1J1A106A043	10uF 10V	1	
	C8018	F1H1A334A028	0.33uF 10V	1	

Safety	Ref. No.	Part No.	Part Name & Description	Qty	Remarks
	C8019	F1H1H102A219	1000pF 50V	1	
	C8020	F1H1H681B047	680pF 50V	1	
	C8021	F1H1C823A178	0.082uF 16V	1	
	C8022	F1H0J4750005	4.7uF 6.3V	1	
	C8027	F1H1H102A219	1000pF 50V	1	
	C8028	F1H1C104A008	0.1uF 16V	1	
	C8029	F1G1A1040006	0.1uF 10V	1	
	C8031	F1G1A1040006	0.1uF 10V	1	
	C8032	F1H1C104A008	0.1uF 16V	1	
	C8033	F1H1C104A008	0.1uF 16V	1	
	C8034	F1H1C104A008	0.1uF 16V	1	
	C8035	F1G1A1040006	0.1uF 10V	1	
	C8036	F1G1A1040006	0.1uF 10V	1	
	C8037	F1H1C104A008	0.1uF 16V	1	
	C8038	F1H1C104A008	0.1uF 16V	1	
	C8039	F1H1C104A008	0.1uF 16V	1	
	C8040	F1G1A1040006	0.1uF 10V	1	
	C8041	F1H1C104A008	0.1uF 16V	1	
	C8042	F1H1C104A008	0.1uF 16V	1	
	C8043	F1H1C104A008	0.1uF 16V	1	
	C8044	F1H0J4750005	4.7uF 6.3V	1	
	C8045	F1G1A1040006	0.1uF 10V	1	
	C8046	F1H1C104A008	0.1uF 16V	1	
	C8047	F1H1H153A885	0.015uF 50V	1	
	C8048	F1H1C104A008	0.1uF 16V	1	
	C8049	F1J1A106A043	10uF 10V	1	
	C8050	F1H1A105A025	1uF 10V	1	
	C8051	F1H1A105A004	1uF 10V	1	
	C8052	F1H1C104A120	0.1uF 16V	1	
	C8053	F1H1C104A120	0.1uF 16V	1	
	C8054	F1H1A105A004	1uF 10V	1	
	C8055	F1H1C104A120	0.1uF 16V	1	
	C8056	F1H1C104A120	0.1uF 16V	1	
	C8057	F1H1H103A885	0.01uF 50V	1	
	C8058	F1G1A1040006	0.1uF 10V	1	
	C8059	F1G1A1040006	0.1uF 10V	1	
	C8060	F1H1A105A025	1uF 10V	1	
	C8061	F1G1A1040006	0.1uF 10V	1	
	C8064	F1J1A106A043	10uF 10V	1	
	C8065	F1J1A106A043	10uF 10V	1	
	C8067	F1J1A106A043	10uF 10V	1	
	C8068	F1H1H332B047	3300pF 50V	1	
	C8069	F1H1H332B047	3300pF 50V	1	
	C8070	F1J1A106A043	10uF 10V	1	
	C8075	F1J1A106A043	10uF 10V	1	
	C8076	F1J1A106A043	10uF 10V	1	
	C8077	F1H1C104A120	0.1uF 16V	1	
	C8078	F1J1A106A043	10uF 10V	1	
	C8079	F1H1C104A008	0.1uF 16V	1	
	C8102	F1H1C104A008	0.1uF 16V	1	
	C8201	F1J1A106A043	10uF 10V	1	
	C8202	F1H1C104A008	0.1uF 16V	1	
	C8203	F1H1H103A885	0.01uF 50V	1	
	C8204	F1J1A106A043	10uF 10V	1	
	C8251	F1J1A106A043	10uF 10V	1	
	C8252	F1H1H103A885	0.01uF 50V	1	
	C8253	F1H1A154A107	0.15uF 10V	1	
	C8254	F1H1H153A885	0.015uF 50V	1	
	C8255	F1H1H182A219	1800pF 50V	1	
	C8256	F1H1H102A219	1000pF 50V	1	
	C8258	F1H1H122A219	1200pF 50V	1	
	C8259	F1J1A106A043	10uF 10V	1	
	C8260	F1H1H103A885	0.01uF 50V	1	
	C8261	F1H1A105A025	1uF 10V	1	
	C8262	F2A1A101B138	100uF 10V	1	
	C8263	D0GBR00J0004	0 1/10W	1	
	C8264	F1H1C104A008	0.1uF 16V	1	
	C8265	F1H1C104A008	0.1uF 16V	1	
	C8266	F1J1A106A043	10uF 10V	1	
	C8267	F1J1A106A043	10uF 10V	1	
	C8268	F1H1H102A219	1000pF 50V	1	
	C8401	F1J1A106A043	10uF 10V	1	
	C8402	F2A0J101A181	100uF 6.3V	1	

Safety	Ref. No.	Part No.	Part Name & Description	Qty	Remarks
	C8403	F1H1H103A885	0.01uF 50V	1	
	C8501	F1J1A106A043	10uF 10V	1	
	C8502	F1H1A105A025	1uF 10V	1	
	C8503	F1H1A105A025	1uF 10V	1	
	C8504	F1G1A1040006	0.1uF 10V	1	
	C8505	F1G1A1040006	0.1uF 10V	1	
	C8506	F1G1A1040006	0.1uF 10V	1	
	C8507	F1G1A1040006	0.1uF 10V	1	
	C8508	F1G1A1040006	0.1uF 10V	1	
	C8509	F1G1A1040006	0.1uF 10V	1	
	C8510	F1G1A1040006	0.1uF 10V	1	
	C8511	F1G1A1040006	0.1uF 10V	1	
	C8512	F1G1A1040006	0.1uF 10V	1	
	C8513	F1H0J4750005	4.7uF 6.3V	1	
	C8514	F1H0J4750005	4.7uF 6.3V	1	

MMH1303