PSG1605004AE

# Service Manual

## CD Stereo System

Simplified

**Model No. SA-MAX5000GM**
**SA-MAX5000GS**

Product Color: (K)...Black Type

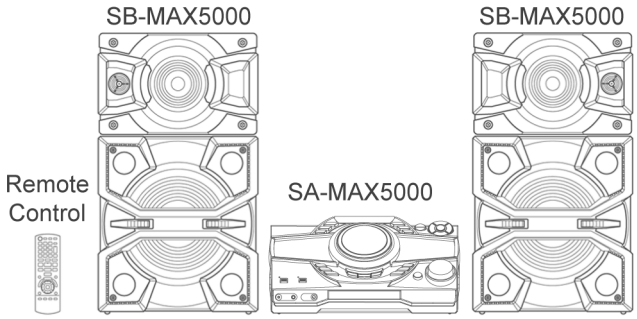


**Notes: Please use this manual together with service manual Model No. SA-MAX5000PS, Order no. (PSG1603007CE).**
**• For speaker system, please use this manual together with SB-MAX5000PN (PSG1603009CE) and SB-MAX5000GM/GS (PSG1605010AE)**

### ⚠ WARNING

This service information is designed for experienced repair technicians only and is not designed for use by the general public. It does not contain warnings or cautions to advise non-technical individuals of potential dangers in attempting to service a product. Products powered by electricity should be serviced or repaired only by experienced professional technicians. Any attempt to service or repair the product or products dealt with in this service information by anyone else could result in serious injury or death.

### IMPORTANT SAFETY NOTICE

There are special components used in this equipment which are important for safety. These parts are marked by ⚠ in the Schematic Diagrams, Circuit Board Diagrams, Exploded Views and Replacement Parts List. It is essential that these critical parts should be replaced with manufacturer's specified parts to prevent shock, fire or other hazards. Do not modify the original design without permission of manufacturer.

## TABLE OF CONTENTS


PAGE

**1 Notes** ---------- **3**
**2 Safety Precautions** ---------- **3**
2.1. General Guidelines ---------- 3
2.2. Before Repair and Adjustment ---------- 4
2.3. Protection Circuitry ---------- 4
2.4. Caution For AC Cord (For GS) ---------- 5
2.5. Safety Parts Information ---------- 6
**3 Specifications** ---------- **7**
**4 Location of Controls and Components** ---------- **8**
4.1. Remote Control Key Button Operation ---------- 8
4.2. Main Unit Key Button Operation ---------- 9
**5 Block Diagram** ---------- **11**
5.1. Audio ---------- 11
**6 Schematic Diagram** ---------- **13**
6.1. Main (DAMP) Circuit (1/2) ---------- 13
6.2. Main (DAMP) Circuit (2/2) ---------- 14
6.3. Main (CD Motor Driver) Circuit ---------- 15
6.4. Main (VREG Fan) Circuit (1/2) ---------- 16


Panasonic®

© Panasonic Corporation 2016. All rights reserved. Unauthorized copying and distribution is a violation of law.

6.5. Main (VREG Fan) Circuit (2/2) ---------- 17
6.6. Main (MICON) Circuit (1/2) ---------- 18
6.7. Main (MICON) Circuit (2/2) ---------- 19
6.8. Panel Circuit (1/3) ---------- 20
6.9. Panel Circuit (2/3) ---------- 21
6.10. Panel Circuit (3/3) ---------- 22
6.11. Mic Circuit ---------- 23
6.12. SMPS Circuit (1/2) ---------- 24
6.13. SMPS Circuit (2/2) ---------- 25
**7 Printed Circuit Board ---------- 26**
7.1. Main P.C.B. (Side A) ---------- 26
7.2. Main P.C.B. (Side B) ---------- 27
7.3. Panel and Mic P.C.B. ---------- 28
7.4. SMPS P.C.B. ---------- 29
**8 Exploded View and Replacement Parts List ---------- 30**
8.1. Cabinet Parts Location 1 ---------- 30
8.2. Cabinet Parts Location 2 ---------- 31
8.3. Cabinet Parts Location 3 ---------- 32
8.4. Packaging ---------- 33
8.5. Mechanical Replacement Part List ---------- 35
8.6. Electrical Replacement Part List ---------- 37

ID: A89350029

# 1 Notes

This simplified service manual is base on SA-MAX5000PS (Order No. PSG1603007CE).

**1) This service manual contains only following information**

- Safety Precautions
- Specifications
- Locations of Controls and Components
- Block Diagram
- Schematic Diagram
- Printed Circuit Board
- Exploded View and Replacement Parts List

# 2 Safety Precautions

## 2.1. General Guidelines

1. **IMPORTANT SAFETY NOTICE**

   There are special components used in this equipment which are important for safety. These parts are marked by ⚠ in the Schematic Diagrams, Circuit Board Layout, Exploded Views and Replacement Parts List. It is essential that these critical parts should be replaced with manufacturer's specified parts to prevent X-RADIATION, shock, fire, or other hazards. Do not modify the original design without permission of manufacturer.

2. An Isolation Transformer should always be used during the servicing of AC Adaptor whose chassis is not isolated from the AC power line. Use a transformer of adequate power rating as this protects the technician from accidents resulting in personal injury from electrical shocks. It will also protect AC Adaptor from being damaged by accidental shorting that may occur during servicing.
3. When servicing, observe the original lead dress. If a short circuit is found, replace all parts which have been overheated or damaged by the short circuit.
4. After servicing, see to it that all the protective devices such as insulation barriers, insulation papers shields are properly installed.
5. After servicing, make the following leakage current checks to prevent the customer from being exposed to shock hazards.

### 2.1.1. Leakage Current Cold Check

1. Unplug the AC cord and connect a jumper between the two prongs on the plug.
2. Measure the resistance value, with an ohmmeter, between the jumpered AC plug and each exposed metallic cabinet part on the equipment such as screwheads, connectors, control shafts, etc. When the exposed metallic part has a return path to the chassis, the reading should be between 1MΩ and 5.2MΩ.

   When the exposed metal does not have a return path to the chassis, the reading must be ∞

ID: A9b029

### 2.1.2. Leakage Current Hot Check

1. Plug the AC cord directly into the AC outlet. Do not use an isolation transformer for this check.
2. Connect a 1.5kΩ, 10 watts resistor, in parallel with a 0.15μF capacitors, between each exposed metallic part on the set and a good earth ground such as a water pipe, as shown in Figure 1-1.
3. Use an AC voltmeter, with 1000 ohms/volt or more sensitivity, to measure the potential across the resistor.
4. Check each exposed metallic part, and measure the voltage at each point.
5. Reverse the AC plug in the AC outlet and repeat each of the above measurements.
6. The potential at any point should not exceed 0.75 volts RMS. A leakage current tester (Simpson Model 229 or equivalent) may be used to make the hot checks, leakage current must not exceed 1/2 milliamp. In case a measurement is outside of the limits specified, there is a possibility of a shock hazard, and the equipment should be repaired and rechecked before it is returned to the customer.

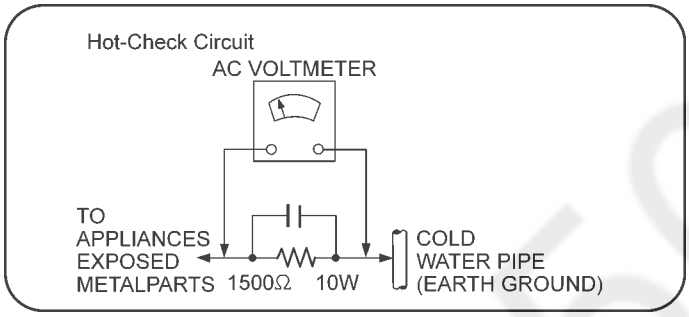


Figure 1-1

## 2.2. Before Repair and Adjustment

Disconnect AC power to discharge AC Capacitors (C1001, C1002, C1003, C1004, C1007, C1008, C1216, C1409, C1518) through a 10 Ω, 10 W resistor to ground.

**Caution:**

DO NOT SHORT-CIRCUIT DIRECTLY (with a screwdriver blade, for instance), as this may destroy solid state devices.

After repairs are completed, restore power gradually using a variac to avoid overcurrent.

Current consumption at AC 220~240 V, 50/60 Hz in Power ON, FM Tuner at volume minimal mode should be ~ 500 mA.

## 2.3. Protection Circuitry

The protection circuitry may have operated if either of the following conditions are noticed:

- No sound is heard when the power is turned on.
- Sound stops during a performance.

The function of this circuitry is to prevent circuitry damage if, for example, the positive and negative speaker connection wires are “shorted”, or if speaker systems with an impedance less than the indicated rated impedance of the amplifier are used.

If this occurs, follow the procedure outlines below:

1. Turn off the power.
2. Determine the cause of the problem and correct it.
3. Turn on the power once again after one minute.

**Note:**

When the protection circuitry functions, the unit will not operate unless the power is first turned off and then on again.

ID: A8935029

## 2.4. Caution For AC Cord (For GS)

For your safety, please read the following text carefully.

This appliance is supplied with a moulded three pin mains plug for your safety and convenience.
A 5-ampere fuse is fitted in this plug.
Should the fuse need to be replaced please ensure that the replacement fuse has a rating of 5-ampere and that it is approved by ASTA or BSI to BS1362.
Check for the ASTA mark ◈ or the BSI mark ⊕ on the body of the fuse.

If the plug contains a removable fuse cover you must ensure that it is refitted when the fuse is replaced.
If you lose the fuse cover the plug must not be used until a replacement cover is obtained.
A replacement fuse cover can be purchased from your local dealer.

**CAUTION!**
IF THE FITTED MOULDED PLUG IS UNSUITABLE FOR THE SOCKET OUTLET IN YOUR HOME THEN THE FUSE SHOULD BE REMOVED AND THE PLUG CUT OFF AND DISPOSED OF SAFELY.
THERE IS A DANGER OF SEVERE ELECTRICAL SHOCK IF THE CUT OFF PLUG IS INSERTED INTO ANY 13-AMPERE SOCKET.

If a new plug is to be fitted please observe the wiring code as stated below.
If in any doubt please consult a qualified electrician.

**IMPORTANT**
The wires in this mains lead are coloured in accordance with the following code:
Blue: Neutral, Brown: Live.
As these colours may not correspond with the coloured markings identifying the terminals in your plug, proceed as follows:
The wire which is coloured Blue must be connected to the terminal which is marked with the letter N or coloured Black or Blue.
The wire which is coloured Brown must be connected to the terminal which is marked with the letter L or coloured Brown or Red.

**WARNING: DO NOT CONNECT EITHER WIRE TO THE EARTH TERMINAL WHICH IS MARKED WITH THE LETTER E, BY THE EARTH SYMBOL ⏚ OR COLOURED GREEN OR GREEN/YELLOW.**

**THIS PLUG IS NOT WATERPROOF—KEEP DRY.**

**Before use**
Remove the connector cover.

**How to replace the fuse**
The location of the fuse differ according to the type of AC mains plug (figures A and B). Confirm the AC mains plug fitted and follow the instructions below.
Illustrations may differ from actual AC mains plug.

1. Open the fuse cover with a screwdriver.

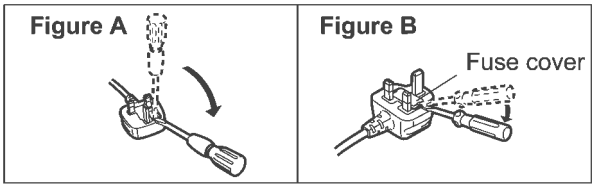


2. Replace the fuse and close or attach the fuse cover.

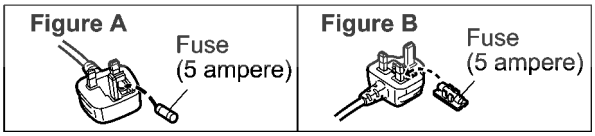


Figure 1-3

ID: AG035029

## 2.5. Safety Parts Information

**Safety Parts List:**

There are special components used in this equipment which are important for safety.

These parts are marked by ⚠ in the Schematic Diagrams, Exploded View & Replacement Parts List. It is essential that these critical parts should be replaced with manufacturer's specified parts to prevent shock, fire or other hazards. Do not modify the original design without permission of manufacturer.

| Safety | Ref No. | Part No. | Part Name & Description | Remarks |
|---|---|---|---|---|
| ⚠ | 14 | RGR0484E-G | REAR PANEL | |
| ⚠ | 19 | RKM0771-K | TOP CABINET | |
| ⚠ | 301 | RAE1051Z-V | TRAVERSE ASS'Y | (E.S.D) |
| ⚠ | A1 | K2CP2YY00061 | AC CORD | |
| ⚠ | A1 | RFA3671 | AC CORD | |
| ⚠ | A1 | K2CT2YY00097 | AC CORD | |
| ⚠ | A3 | RQT0A66-G | O/I BOOK (En/Cn,Ar) | |
| ⚠ | PCB7 | REP5304C | SMPS P.C.B | (RTL) |
| ⚠ | Q1403 | B3PBA0000579 | PHOTO COUPLER | (E.S.D) |
| ⚠ | Q1404 | B3PBA0000579 | PHOTO COUPLER | (E.S.D) |
| ⚠ | Q1405 | B3PBA0000579 | PHOTO COUPLER | (E.S.D) |
| ⚠ | Q1505 | B3PBA0000579 | PHOTO COUPLER | (E.S.D) |
| ⚠ | Q1701 | B3PBA0000579 | PHOTO COUPLER | (E.S.D) |
| ⚠ | DZ1001 | D4EAY511A127 | VARISTOR | (E.S.D) |
| ⚠ | L1001 | G0B223J00001 | LINE FILTER | |
| ⚠ | L1003 | G0B223J00001 | LINE FILTER | |
| ⚠ | T1401 | G4DYA0000592 | TRANSFORMER | |
| ⚠ | T1501 | G4DYA0000778 | TRANSFORMER | |
| ⚠ | F1001 | K5D103BNA005 | FUSE | |
| ⚠ | F1401 | K5G501YA0081 | FUSE | |
| ⚠ | F1501 | K5G502Y00006 | FUSE | |
| ⚠ | P1001 | K2AA2B000011 | AC INLET | |
| ⚠ | C1001 | F0CAF474A105 | 0.47uF | SMPS |
| ⚠ | C1002 | F0CAF104A105 | 0.1uF | SMPS |
| ⚠ | C1003 | F1BAF471A215 | 470pF | SMPS |
| ⚠ | C1004 | F1BAF471A215 | 470pF | SMPS |
| ⚠ | C1007 | F1BAF471A215 | 470pF | SMPS |
| ⚠ | C1008 | F1BAF471A215 | 470pF | SMPS |
| ⚠ | C1216 | F1BAF471A215 | 470pF | |
| ⚠ | C1409 | F1BAF471A215 | 470pF | SMPS |
| ⚠ | C1518 | F1BAF471A215 | 470pF | |
| ⚠ | R1001 | D0GF105JA048 | 1M 1/4W | SMPS |
| ⚠ | R1002 | D0GF105JA048 | 1M 1/4W | SMPS |
| ⚠ | R1003 | D0GF105JA048 | 1M 1/4W | SMPS |

ID: A0B5029

# 3 Specifications

■ **Amplifier section**

**RMS output power stereo mode**

| | |
|---|---|
| High Ch | 350 W per channel (3 Ω), 1 kHz, 30% THD |
| Mid Ch | 350 W per channel (3 Ω), 1 kHz, 30% THD |
| Low Ch | 500 W per channel (2 Ω), 100 Hz, 30% THD |
| Total RMS stereo mode power | 2400 W |

■ **Tuner**

**Frequency modulation (FM)**

| | |
|---|---|
| Preset memory | 30 stations |
| Frequency range | 87.50 MHz to 108.00 MHz (50 kHz step) |
| Antenna terminals | 75 Ω (unbalanced) |

**Amplitude modulation (AM)**

| | |
|---|---|
| Preset memory | 15 stations |
| Frequency range | 522 kHz to 1629 kHz (9 kHz step)<br>520 kHz to 1630 kHz (10 kHz step) |

■ **Disc section**

**Disc played (8 cm or 12 cm)**

CD, CD-R/RW (CD-DA, MP3*)

*MPEG-1 Layer 3, MPEG-2 Layer 3

**Pick up**

| | |
|---|---|
| Wavelength | 790 nm(CD) |

■ **Buetooth® section**

| | |
|---|---|
| **Version** | Bluetooth® 2.1 + EDR |
| **Class** | Class 2 |
| **Supported profiles** | A2DP, AVRCP, SPP, OPP, FTP |
| **Operating frequency** | 2.4 GHz band FH-SS |
| **Operation distance** | 10 m line of sight |

■ **Internal memory section**

**Memory**

| | |
|---|---|
| Memory size | 4 GB |
| Media file format support | MP3 (*.mp3) |

**Memory recording**

| | |
|---|---|
| Bit rate | 128 kbps |
| Memory recording speed | 1x, 3x max (CD only) |
| Recording file format | MP3 (*.mp3) |

■ **Terminal section**

**USB port**

| | |
|---|---|
| USB standard | USB 2.0 full speed |
| Media file format support | MP3 (*.mp3) |
| USB device file system | FAT12, FAT16, FAT32 |

**USB recording**

| | |
|---|---|
| Bit rate | 128 kbps |
| USB recording speed | 1x, 3x (CD only) |
| Recording file format | MP3 (*.mp3) |

**AUX IN 1**

| | |
|---|---|
| Audio input | Pin jack |

**AUX IN 2**

| | |
|---|---|
| Terminal | Stereo, 3.5 mm jack |

**Microphone**

| | |
|---|---|
| Terminal | Mono, 6.3 mm jack (2 systems) |

■ **Speaker section**

**Speaker unit(s)**

| | |
|---|---|
| Tweeter | 6 cm cone type |
| Woofer | 20 cm cone type |
| Super Woofer | 30 cm cone type |
| **Impedance** | High 3 Ω / Mid 3 Ω / Low 2 Ω |
| **Dimensions (W x H x D)** | 407 mm x 709 mm x 389 mm |
| **Mass** | 19 kg |

■ **General**

| | |
|---|---|
| **Power supply** | AC 220 V to 240 V, 50/60 Hz |
| **Power consumption** | 240 W |
| **Dimensions (W x H x D)** | 460 mm x 234 mm x 409 mm |
| **Mass** | 5.5 kg |
| **Operating temperature range** | 0 °C to +40 °C |
| **Operating humidity range** | 35% to 80% RH (no condensation) |
| **Power consumption in standby mode (approximate)** | 0.5 W |
| **Power consumption in standby mode (approximate)** (With “BLUETOOTH STANDBY” set to “ON”) | 0.6 W |

**Note:**

1. Specifications are subject to change without notice. Mass and dimension are approximate.
2. Total harmonic distortion is measured by the digital spectrum analyzer.

■ System: SC-MAX5000GM

Main Unit: SA-MAX5000GM
Speaker System: SB-MAX5000GS

■ System: SC-MAX5000GS

Main Unit: SA-MAX5000GS
Speaker System: SB-MAX5000GS

Dr. Aggson

# 4 Location of Controls and Components

## 4.1. Remote Control Key Button Operation

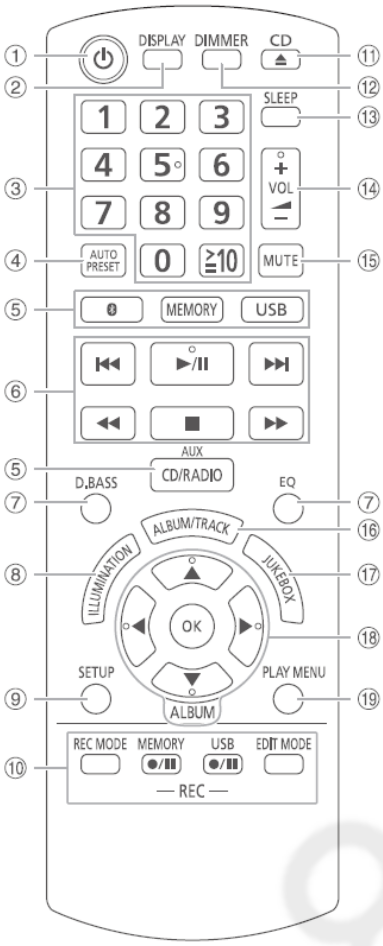


① **Standby/on switch [⏻], [⏻/I]**
Press to switch the unit from on to standby mode or vice versa. In standby mode, the unit is still consuming a small amount of power.

② View the content information

③ **Numeric buttons**
To select a 2-digit number
Example: 16: [≧10]→[1]→[6]

④ Auto preset the radio station

⑤ **Select the audio source**
On the main unit:
To start Bluetooth® pairing, press and hold [ –PAIRING].

⑥ Basic playback control

⑦ Select the sound effects

⑧ Select the illumination effects

⑨ View the setup menu

⑩ Recording operation control

⑪ Open or close the disc tray

⑫ **Decrease the brightness of the display panel**
The illumination effect is also switched off.
To cancel, press the button again.

⑬ Set the sleep timer

⑭ Adjust the volume level

⑮ **Mute the sound**
To cancel, press the button again.
"MUTE" is also canceled when you adjust the volume or when you switch off the system.

⑯ Select MP3 album or track

⑰ Select DJ jukebox or Karaoke jukebox

⑱ Select or confirm the option

⑲ View the play menu

ID: A8050029

# 4.2. Main Unit Key Button Operation

**Top View**

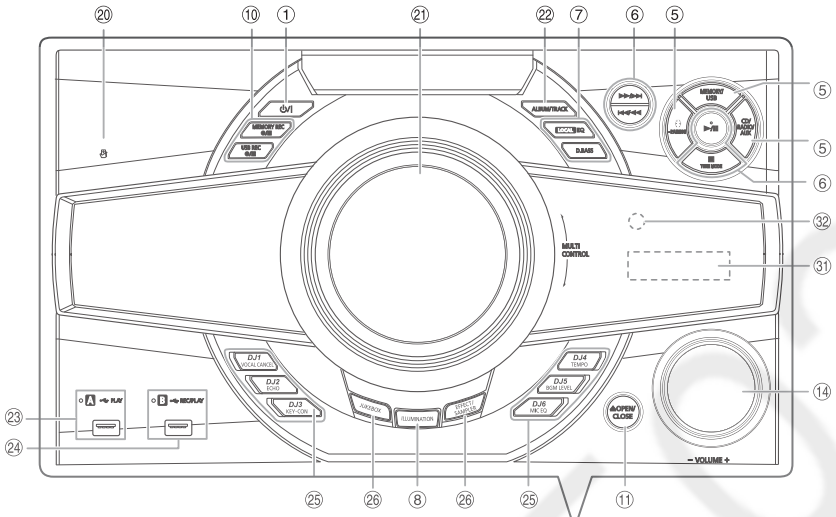


**Front View**

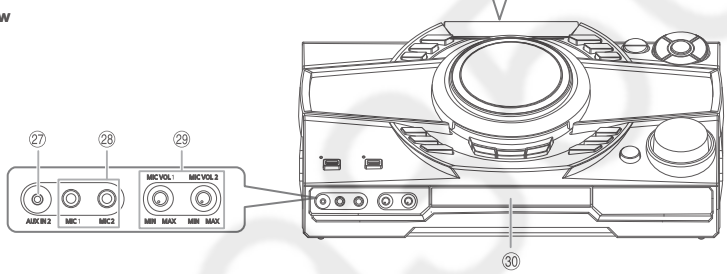


① **Standby/on switch [⏻], [⏻/I]**
Press to switch the unit from on to standby mode or vice versa. In standby mode, the unit is still consuming a small amount of power.

⑤ **Select the audio source**
On the main unit:
To start Bluetooth® pairing, press and hold [ –PAIRING].

⑥ Basic playback control

⑦ Select the sound effects

⑧ Select the illumination effects

⑩ Recording operation control

⑪ Open or close the disc tray

⑭ Adjust the volume level

⑳ NFC touch area

㉑ Turntable for DJ and multi control

㉒ **Select MP3 album or track**
Press [ALBUM/TRACK] to select album or track.
**Browse tracks or albums**
Turn [MULTI CONTROL] to browse.
To start playback from the selection, press [▶/❚❚].

㉓ **USB A**
USB port ( )
USB status indicator
Play MP3 tracks.

㉔ **USB B**
USB port ( )
USB status indicator
Play MP3 tracks.
Record sound or music tracks.

㉕ **Select the Karaoke effect**
**DJ function direct buttons**
Press [JUKEBOX] or [EFFECT/SAMPLER] to switch on the DJ or Karaoke function.
Press [DJ1] to [DJ6] on the main unit to select the desired function.
To cancel, press the selected [DJ1] to [DJ6] again.

㉖ **Switch on the Karaoke or DJ function**
To cancel, press the button again.

㉗ AUX IN jack

㉘ Microphone jack

㉙ Adjust the microphone volume level

> **CAUTION!**
> Keep the microphone volume knob out of reach of children to prevent swallowing.

㉚ Disc tray

㉛ Display panel

㉜ **Remote control sensor**
Distance: Within approximately 7 m
Angle: Approximately 20° up and down,
30° left and right

ID: A89350029

# 5 Block Diagram

## 5.1. Audio

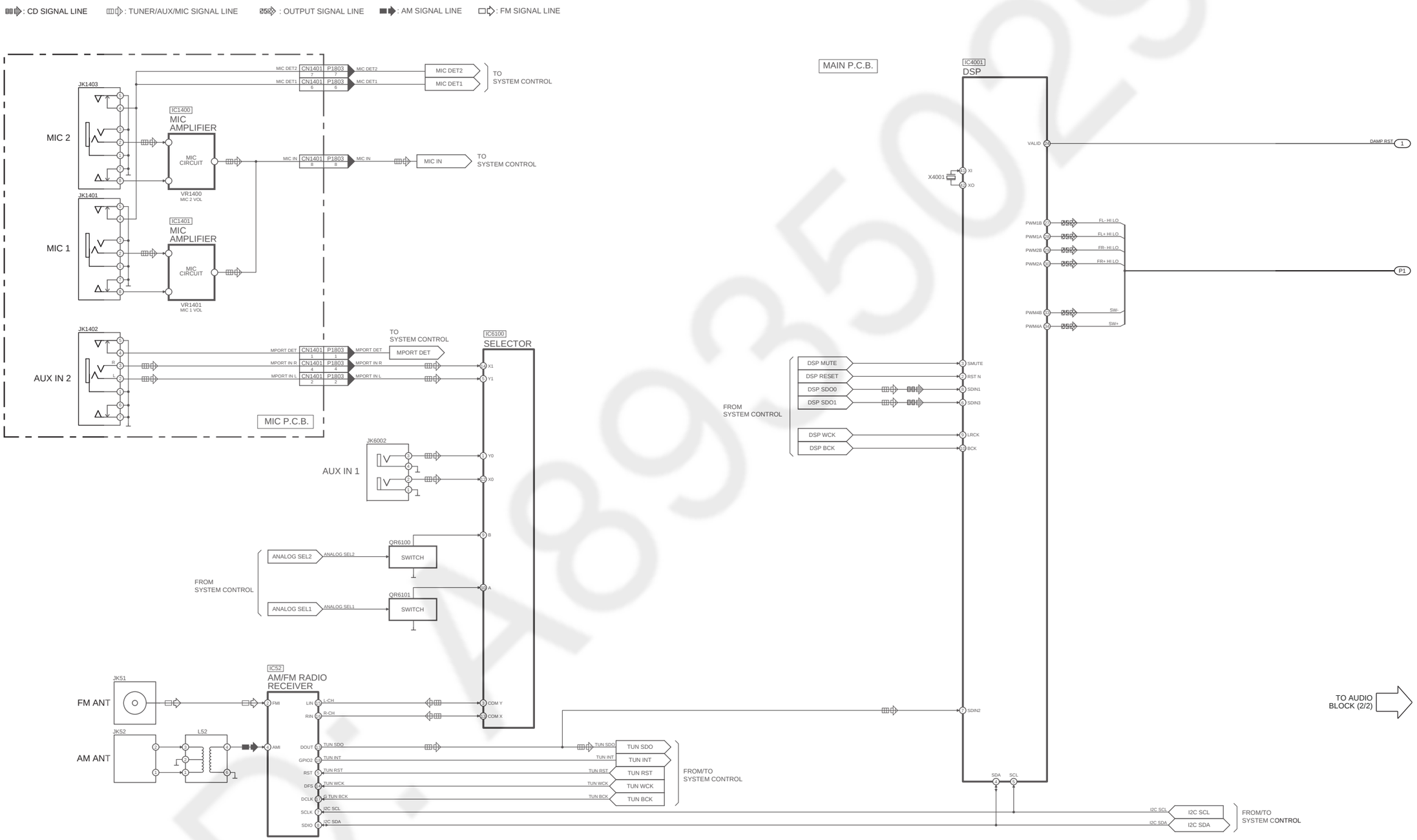


SA-MAX5000GM/GS AUDIO (1/2) BLOCK DIAGRAM

: CD SIGNAL LINE  : TUNER/AUX/MIC SIGNAL LINE  : OUTPUT SIGNAL LINE  : AM SIGNAL LINE  : FM SIGNAL LINE

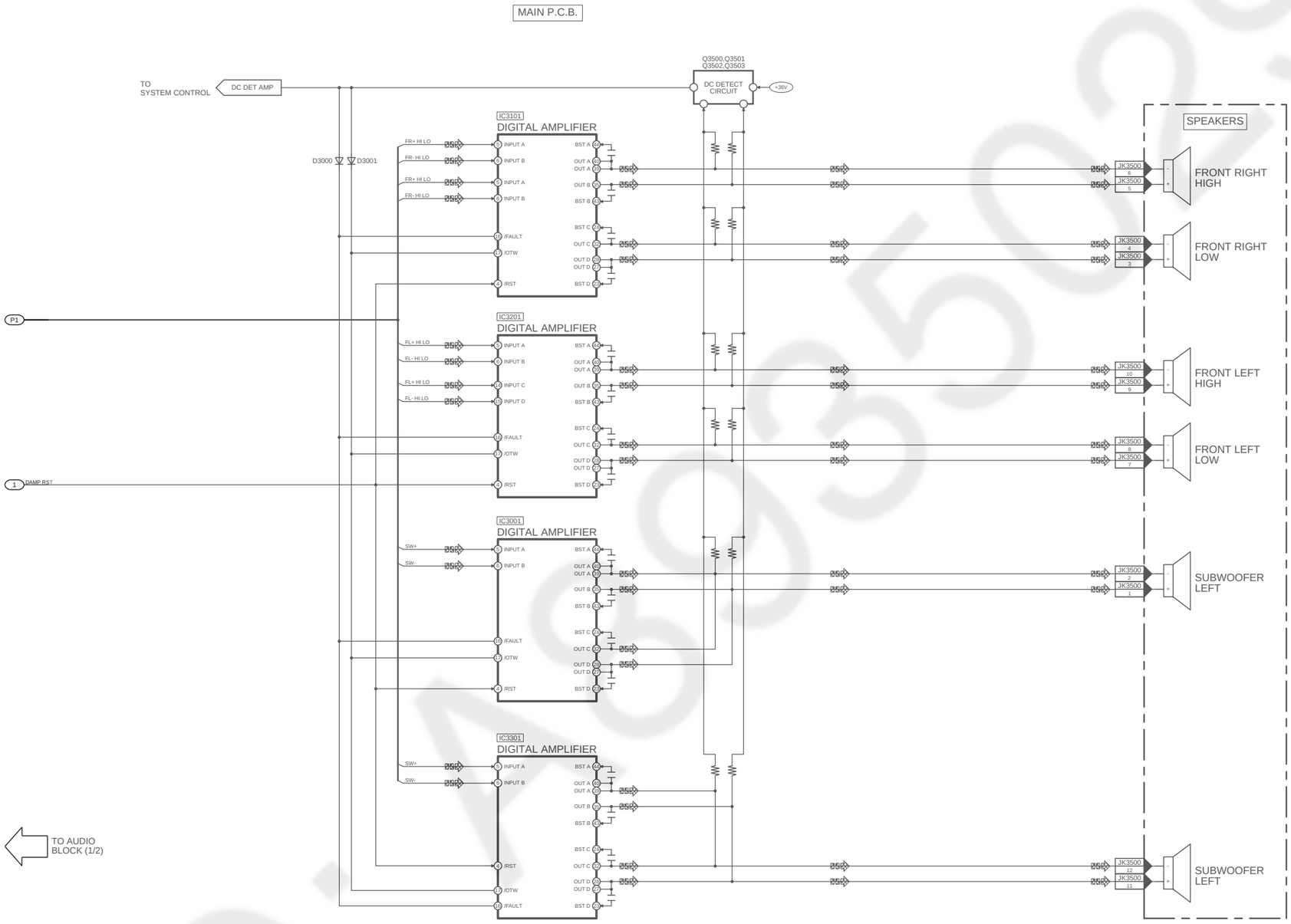


SA-MAX5000GM/GS AUDIO (2/2) BLOCK DIAGRAM

# 6 Schematic Diagram

## 6.1. Main (DAMP) Circuit (1/2)

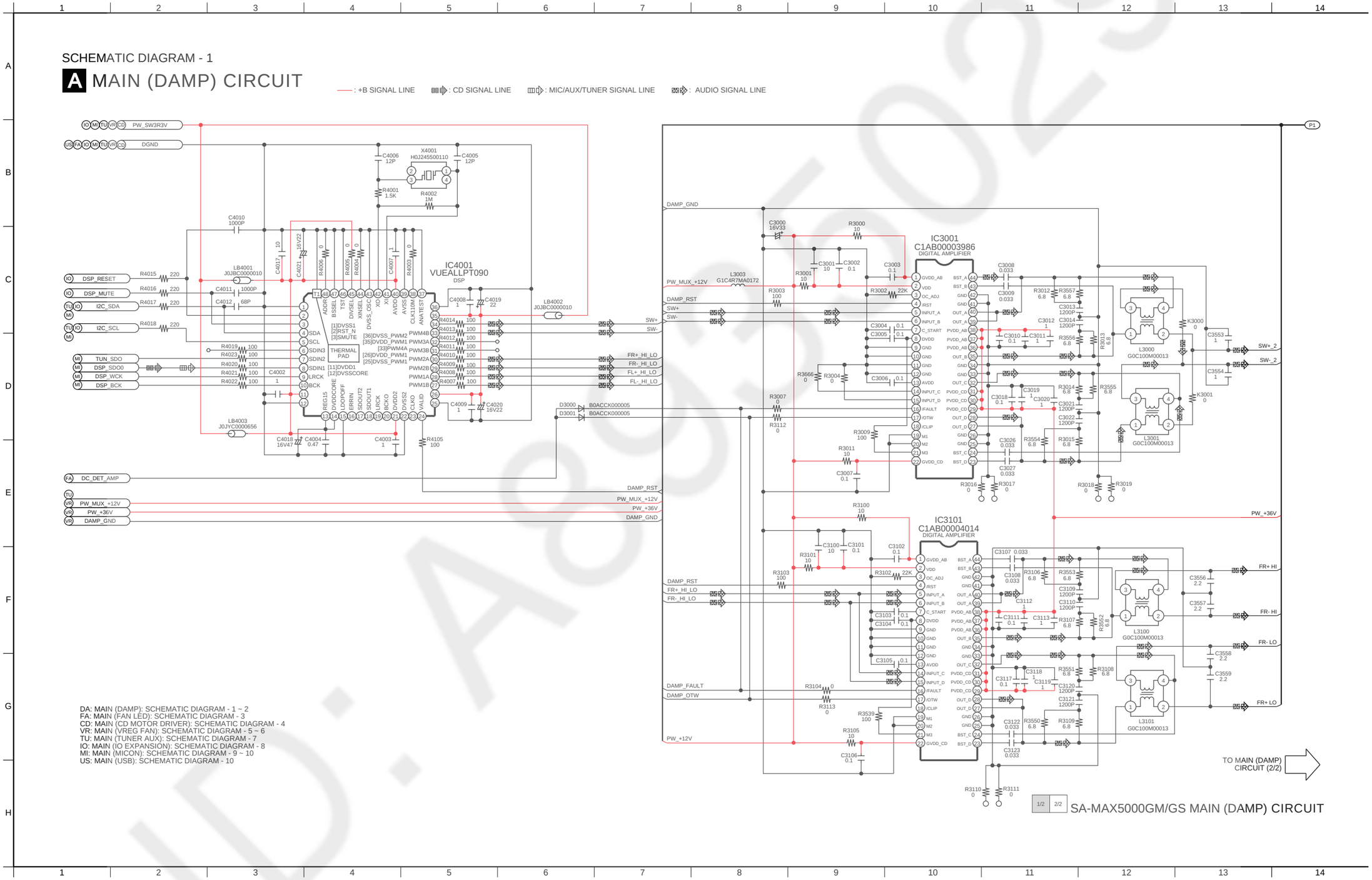

## 6.2. Main (DAMP) Circuit (2/2)

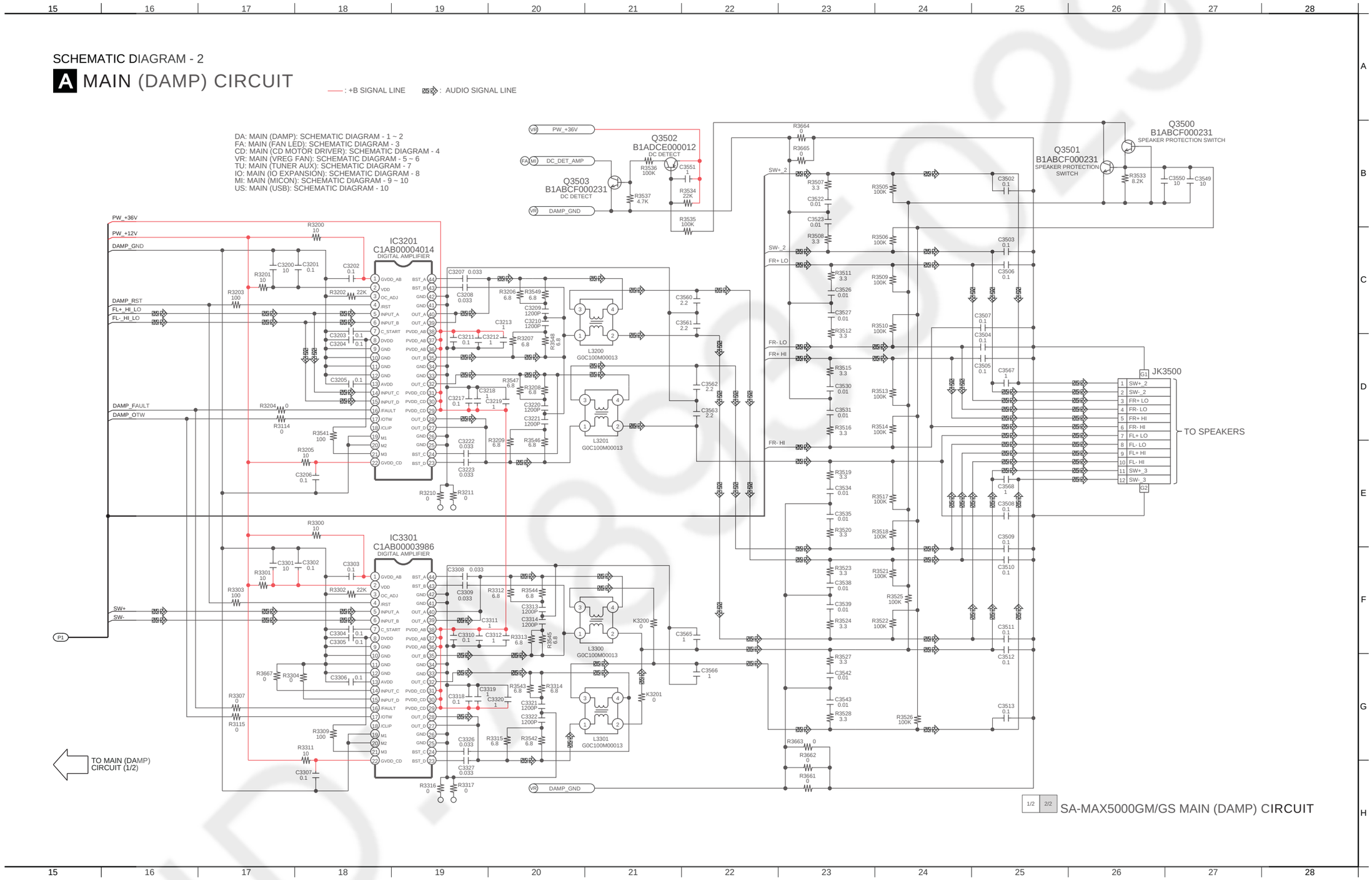

## 6.3. Main (CD Motor Driver) Circuit

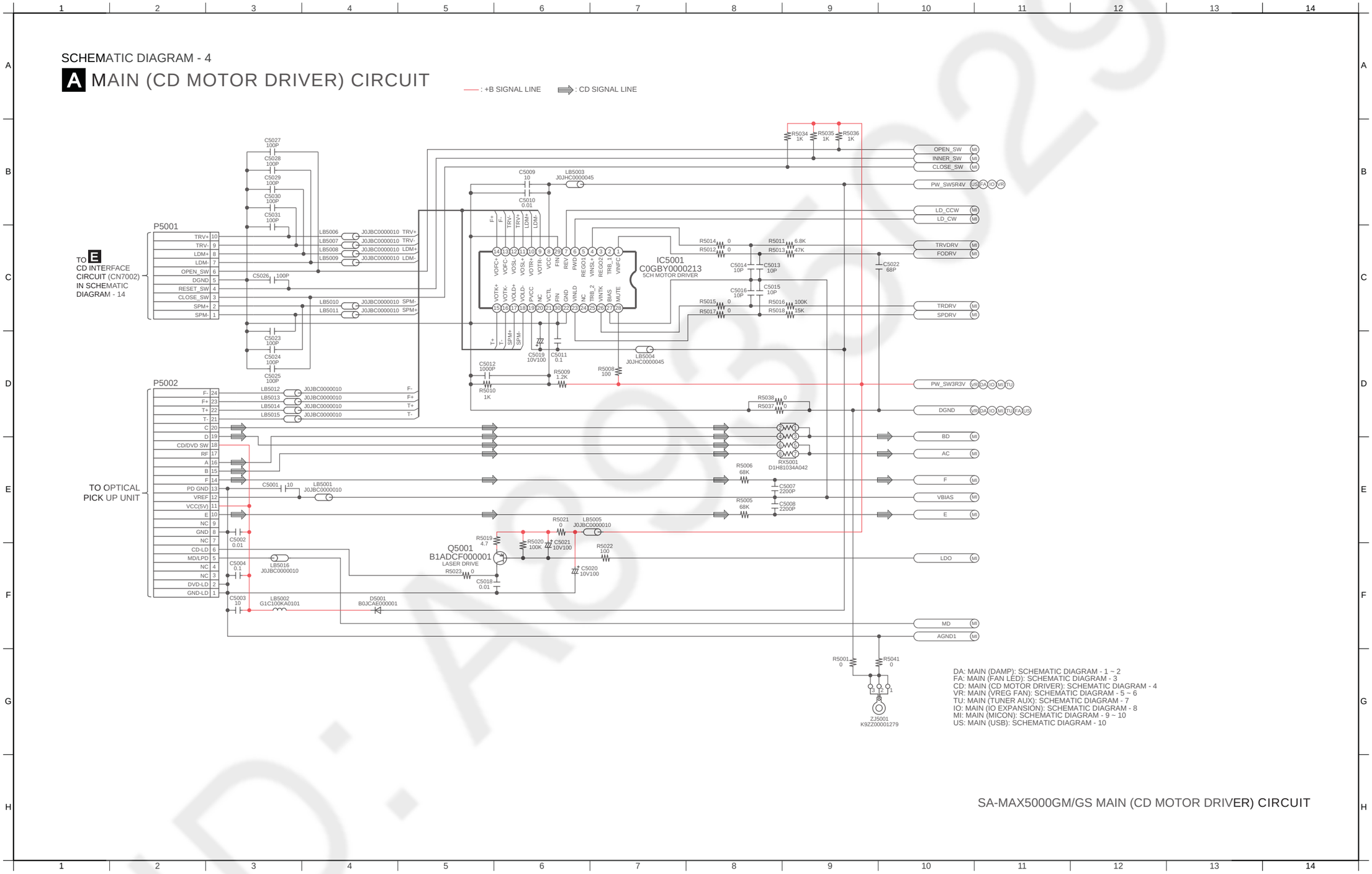

## 6.4. Main (VREG Fan) Circuit (1/2)

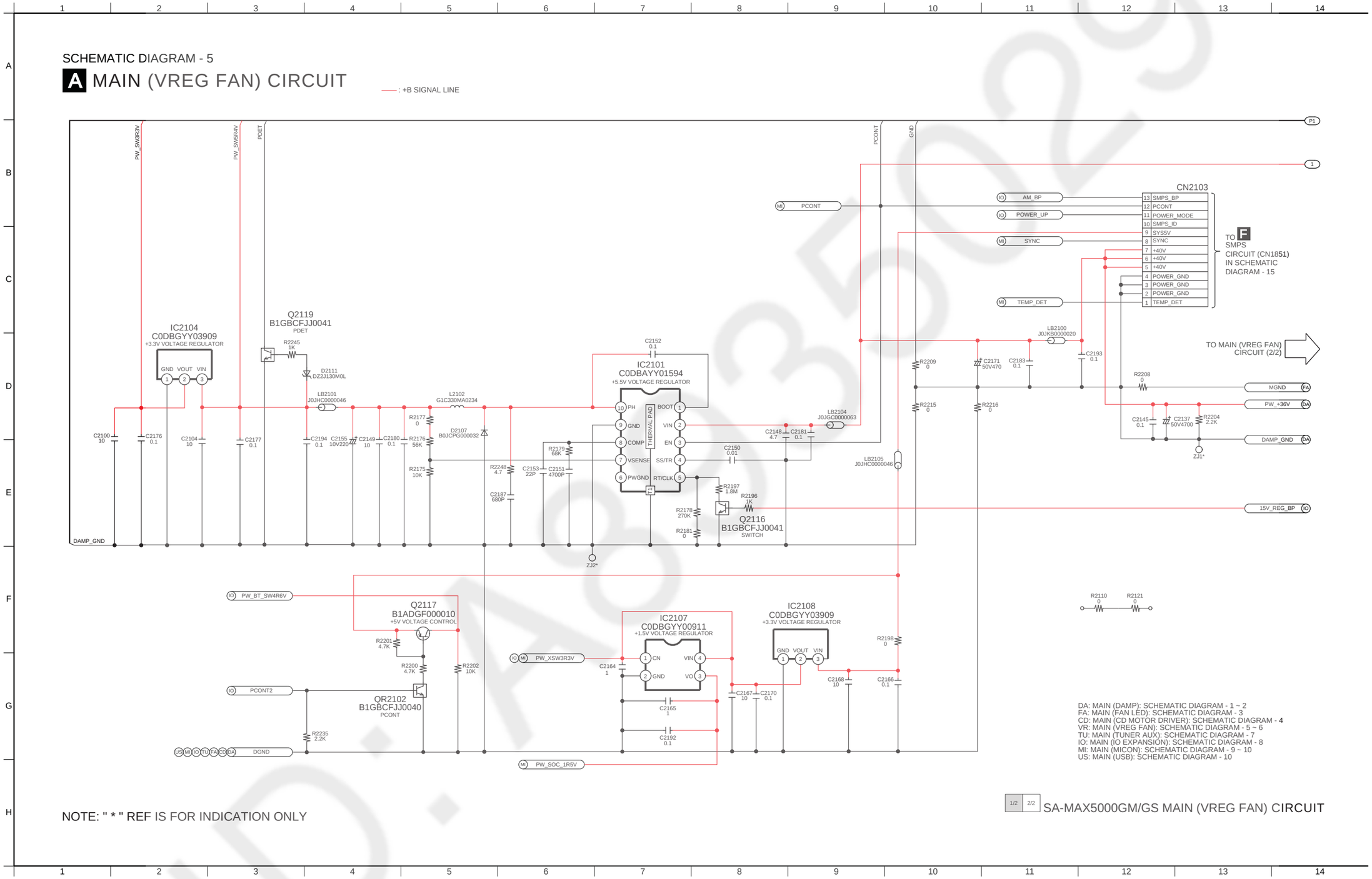

## 6.5. Main (VREG Fan) Circuit (2/2)

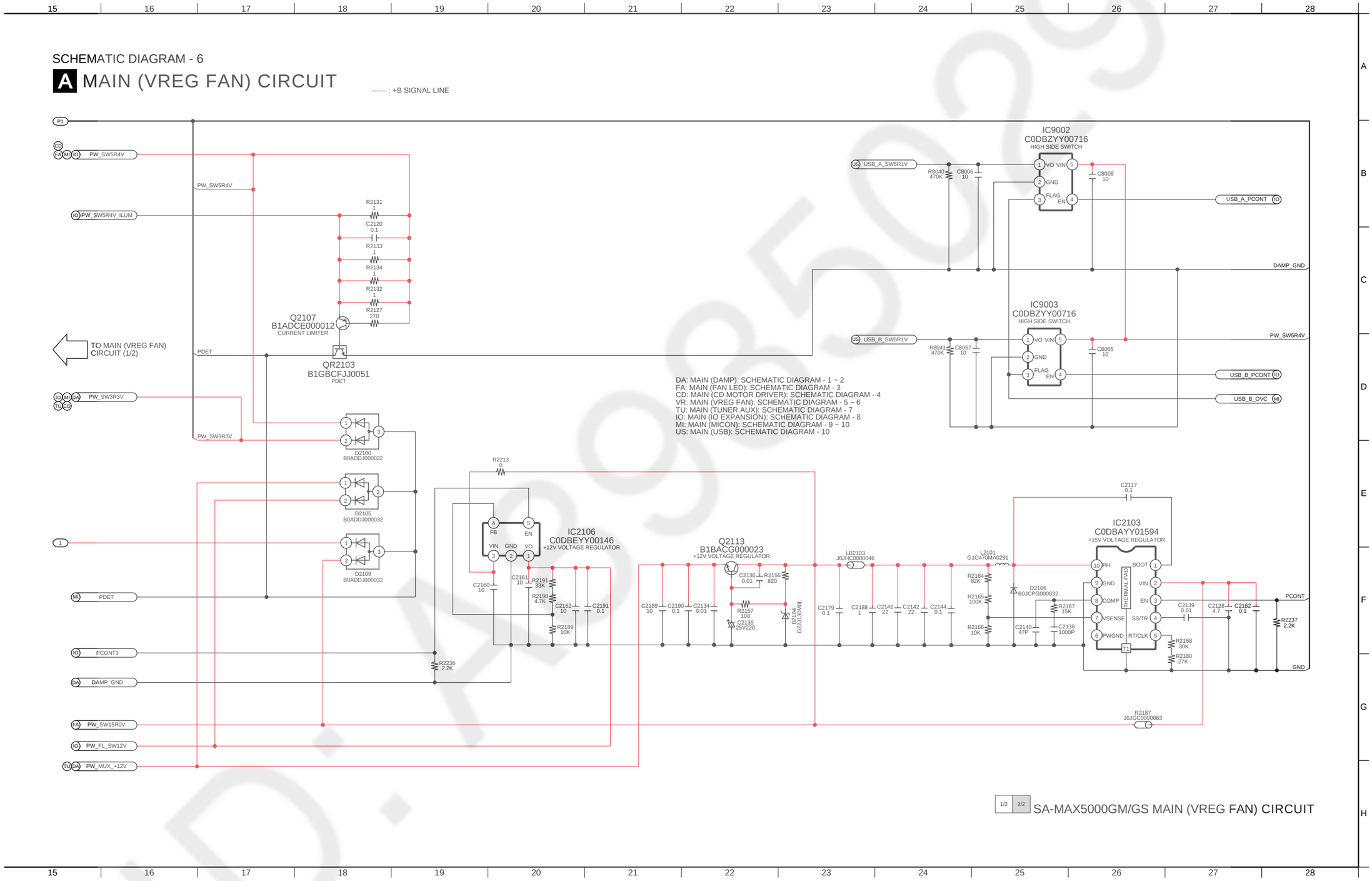


ID: A85029

## 6.6. Main (MICON) Circuit (1/2)

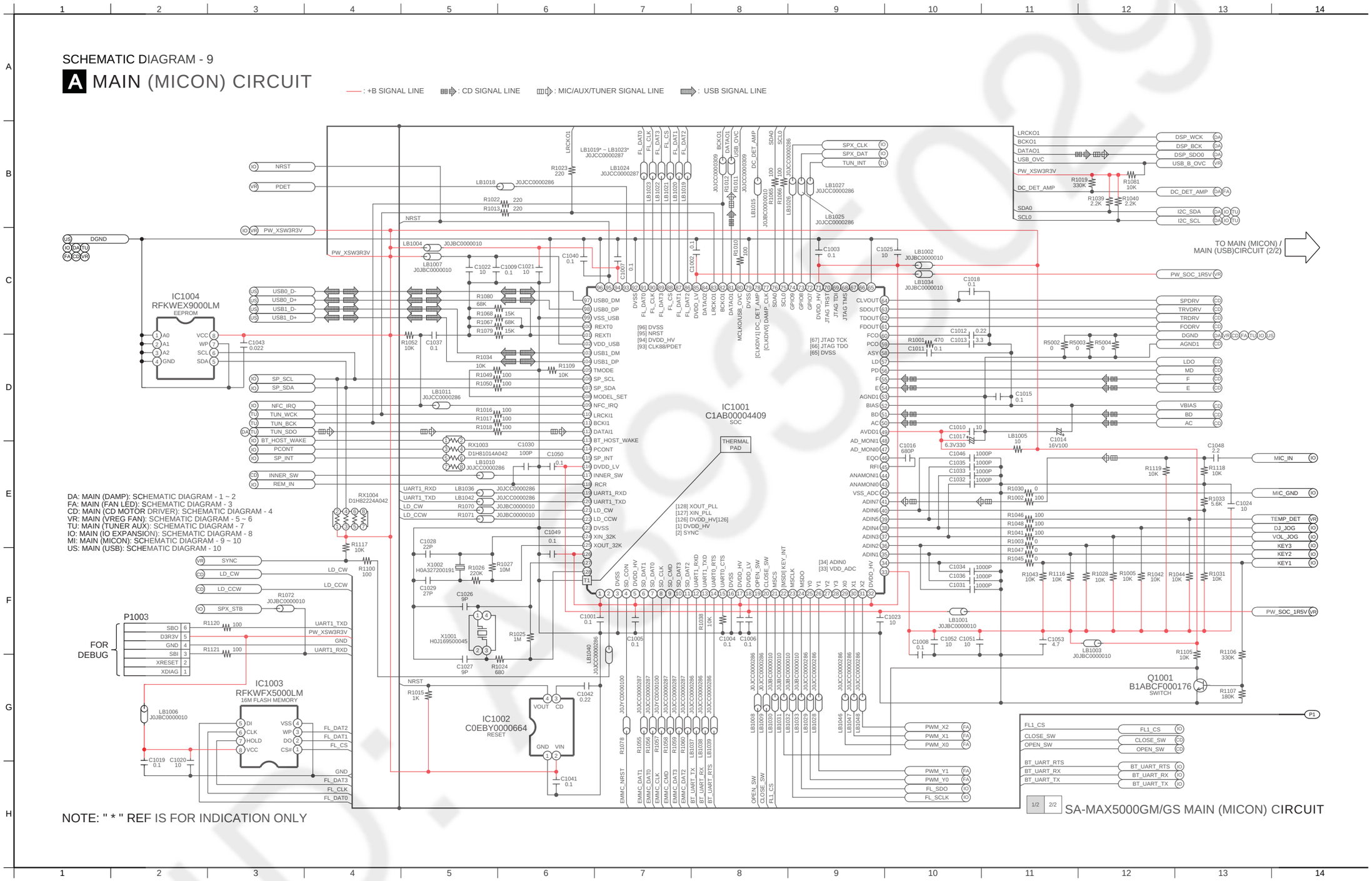

## 6.7. Main (MICON) Circuit (2/2)

SCHEMATIC DIAGRAM - 10

### A MAIN (MICON) CIRCUIT

—— : +B SIGNAL LINE

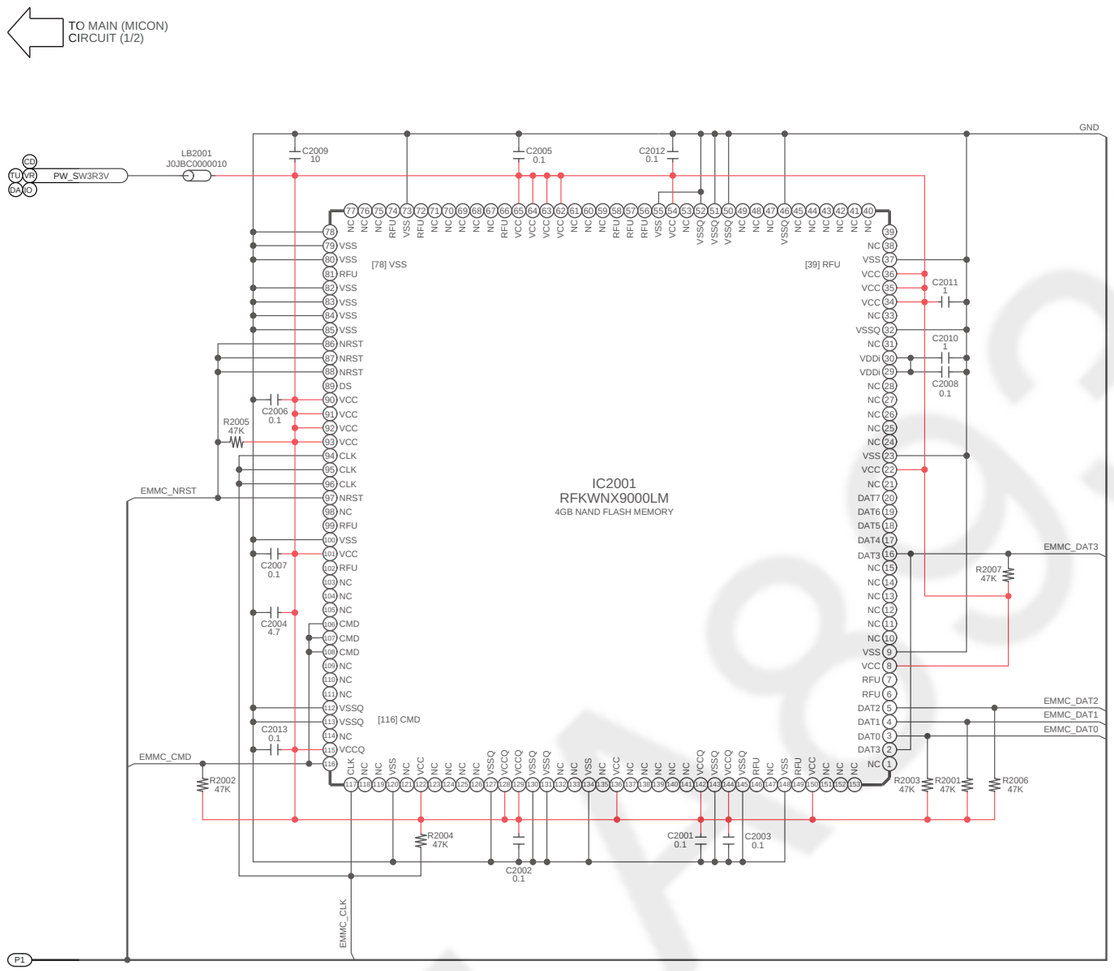


### A MAIN (USB) CIRCUIT

—— : +B SIGNAL LINE ⇨ : USB SIGNAL LINE

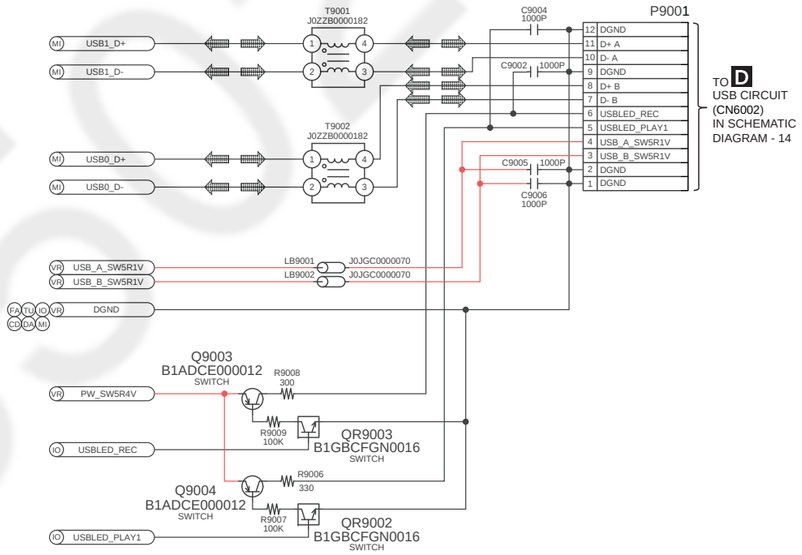


DA: MAIN (DAMP): SCHEMATIC DIAGRAM - 1 ~ 2
FA: MAIN (FAN LED): SCHEMATIC DIAGRAM - 3
CD: MAIN (CD MOTOR DRIVER): SCHEMATIC DIAGRAM - 4
VR: MAIN (VREG FAN): SCHEMATIC DIAGRAM - 5 ~ 6
TU: MAIN (TUNER AUX): SCHEMATIC DIAGRAM - 7
IO: MAIN (IO EXPANSION): SCHEMATIC DIAGRAM - 8
MI: MAIN (MICON): SCHEMATIC DIAGRAM - 9 ~ 10
US: MAIN (USB): SCHEMATIC DIAGRAM - 10

1/2 2/2 SA-MAX5000GM/GS MAIN (MICON) / MAIN (USB) CIRCUIT

## 6.8. Panel Circuit (1/3)

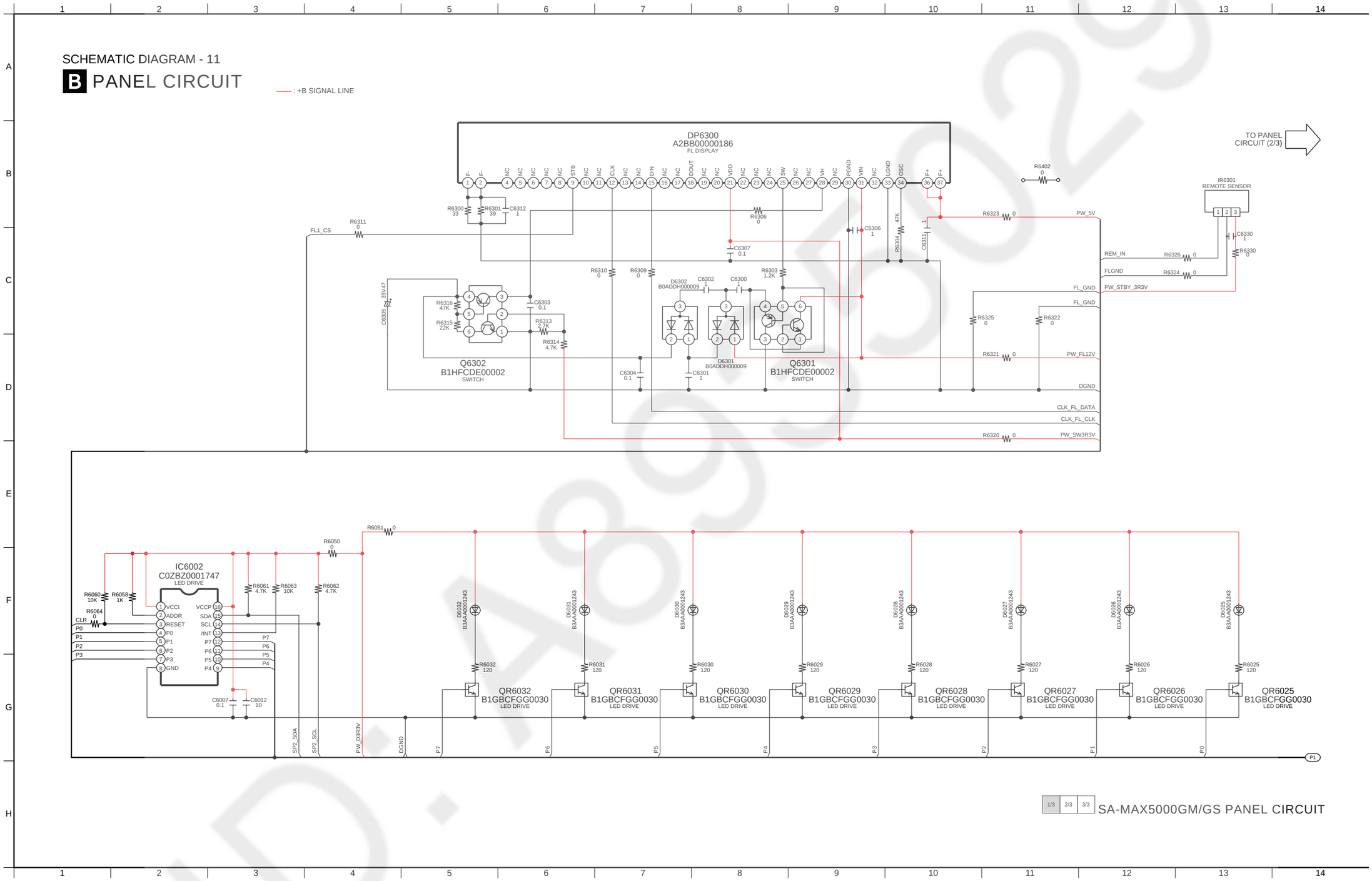

## 6.9. Panel Circuit (2/3)

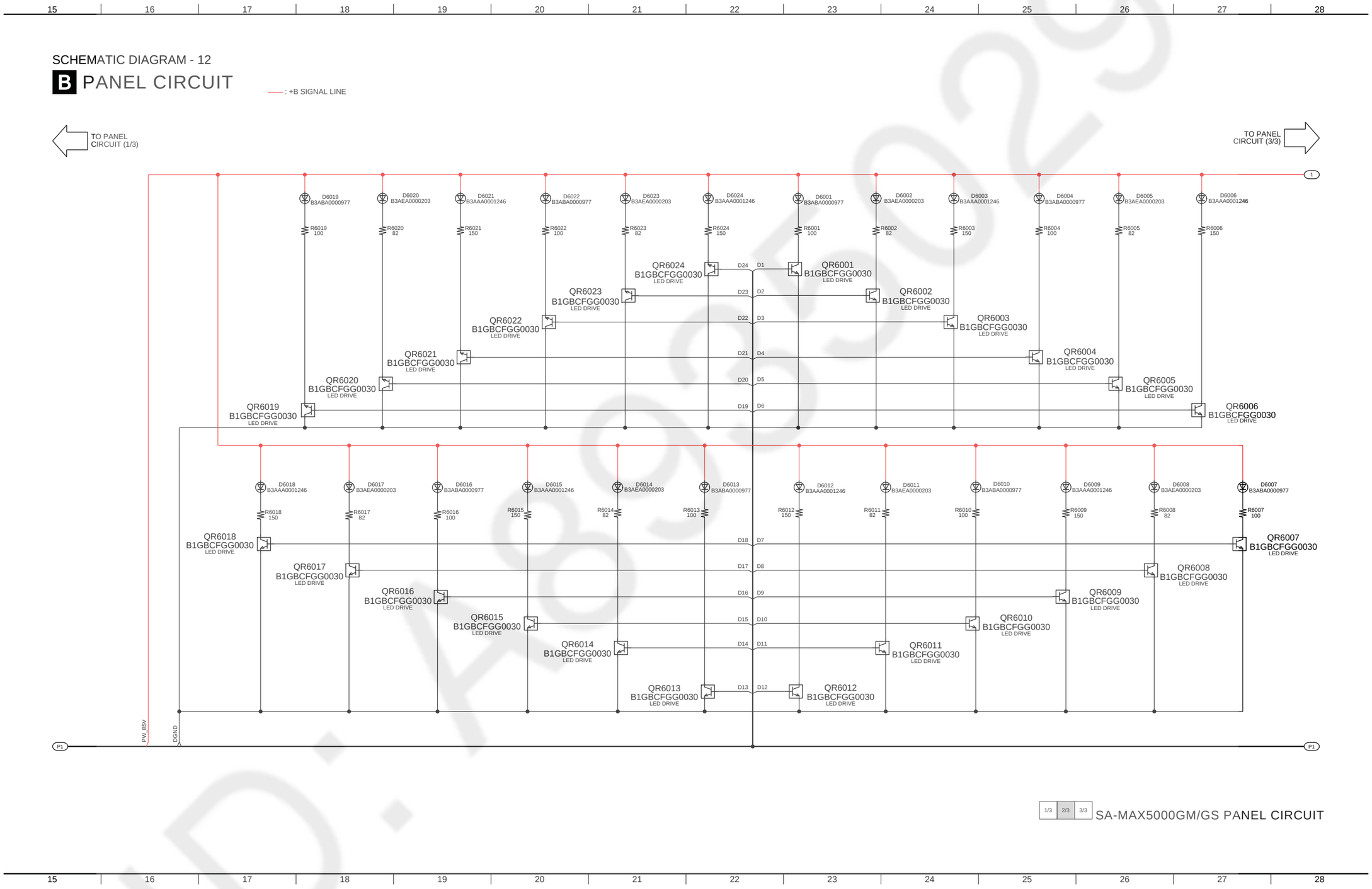

## 6.10. Panel Circuit (3/3)

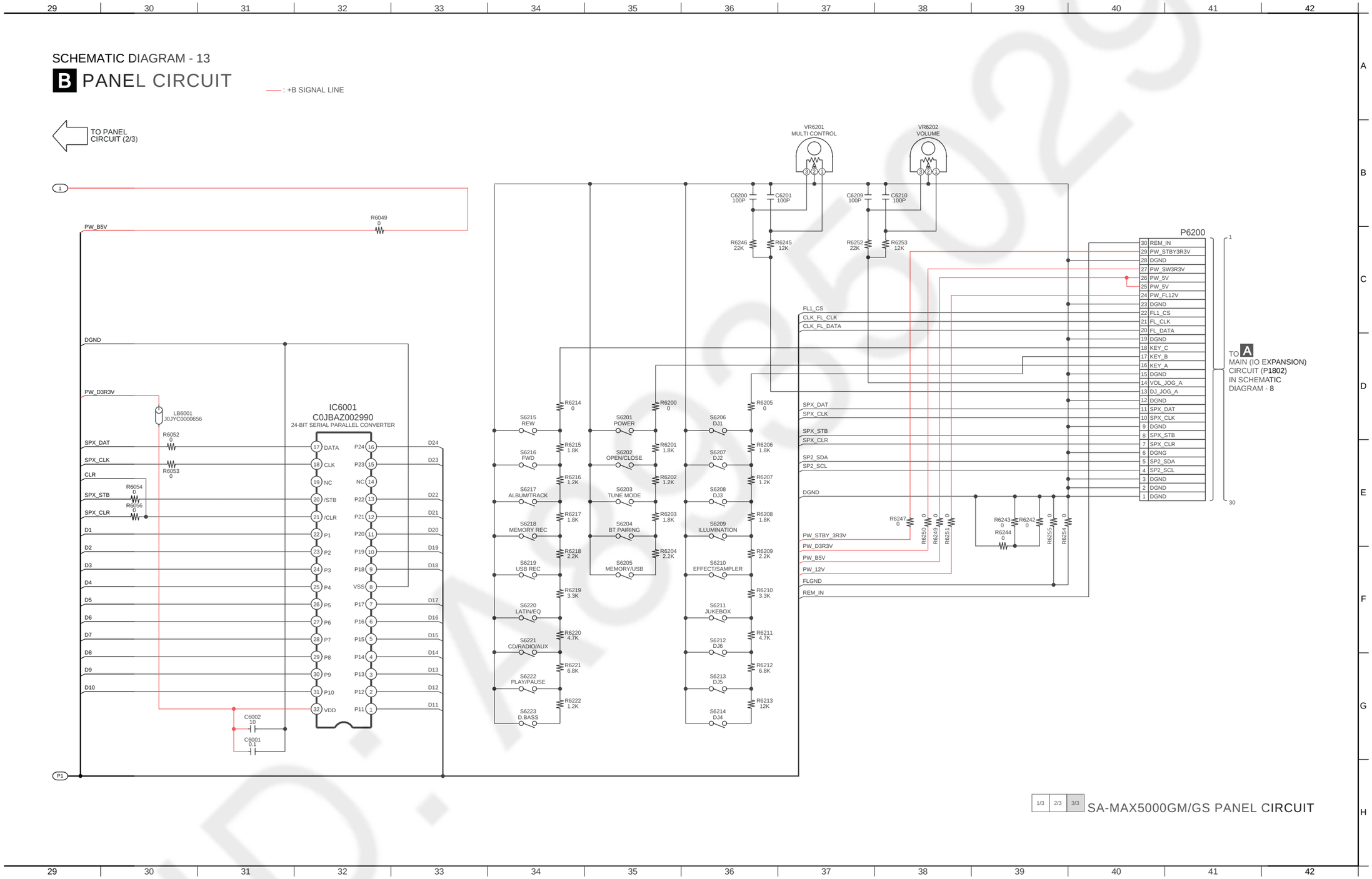

## 6.11. Mic Circuit

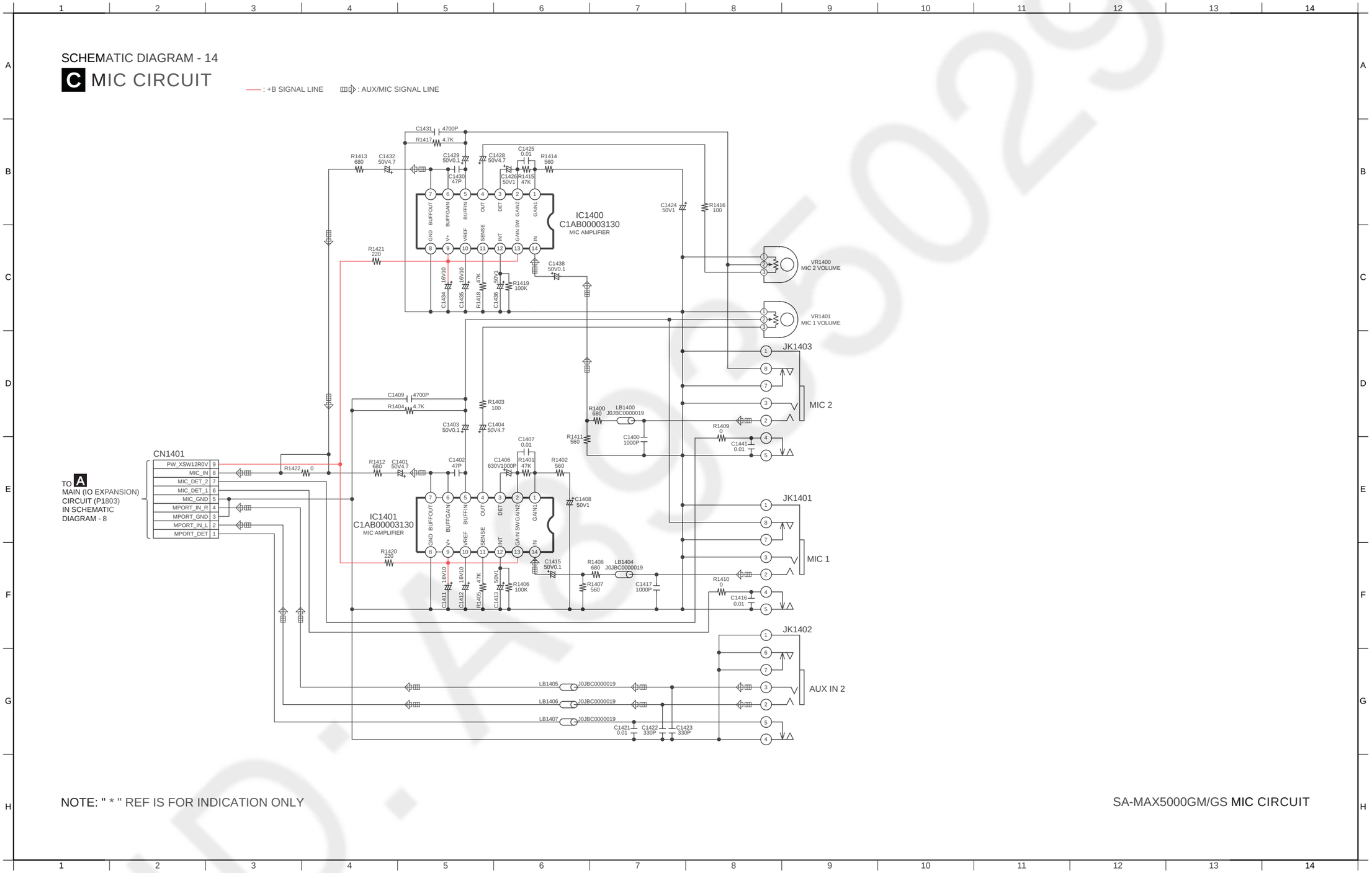

## 6.12. SMPS Circuit (1/2)

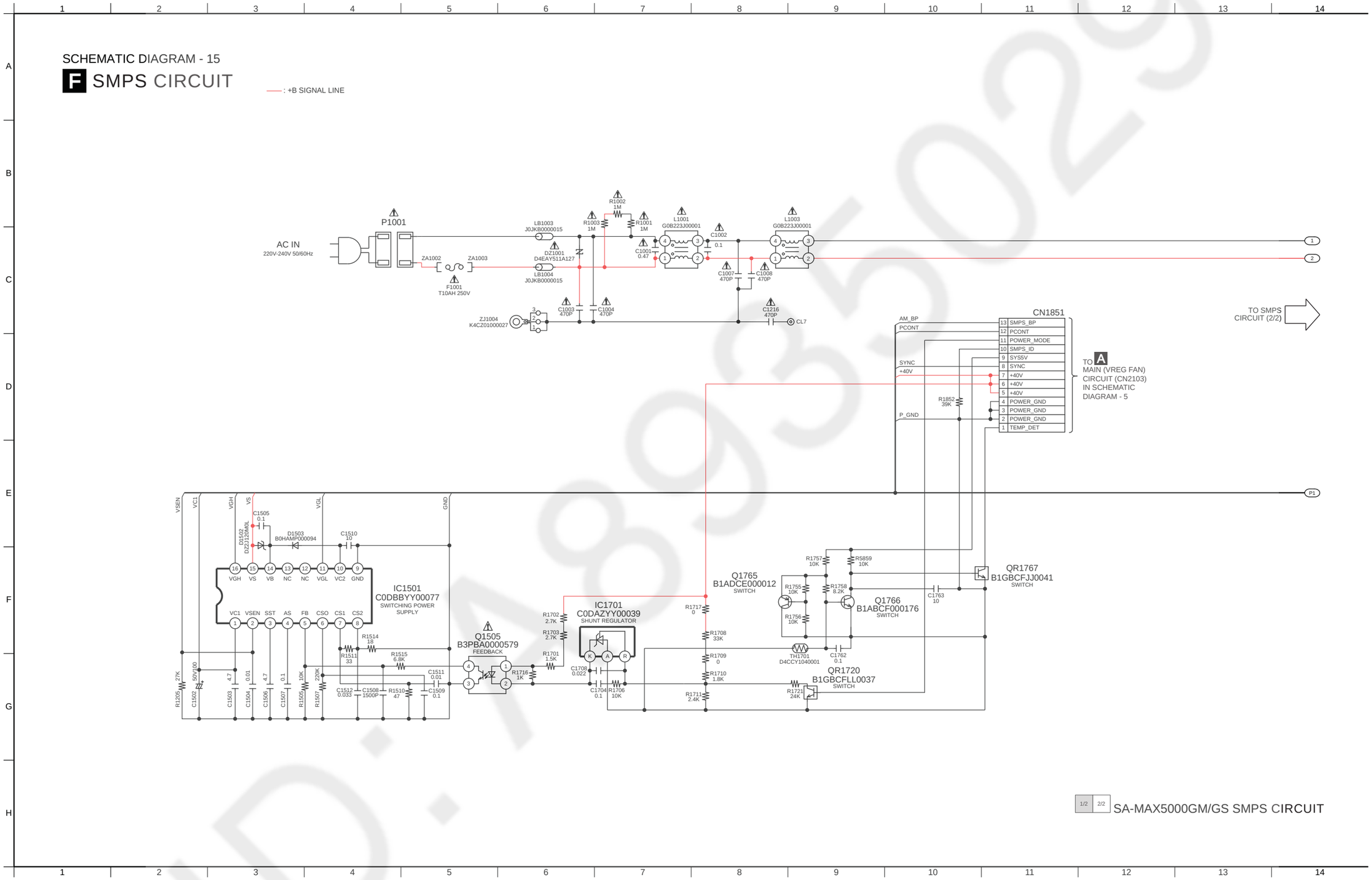

## 6.13. SMPS Circuit (2/2)

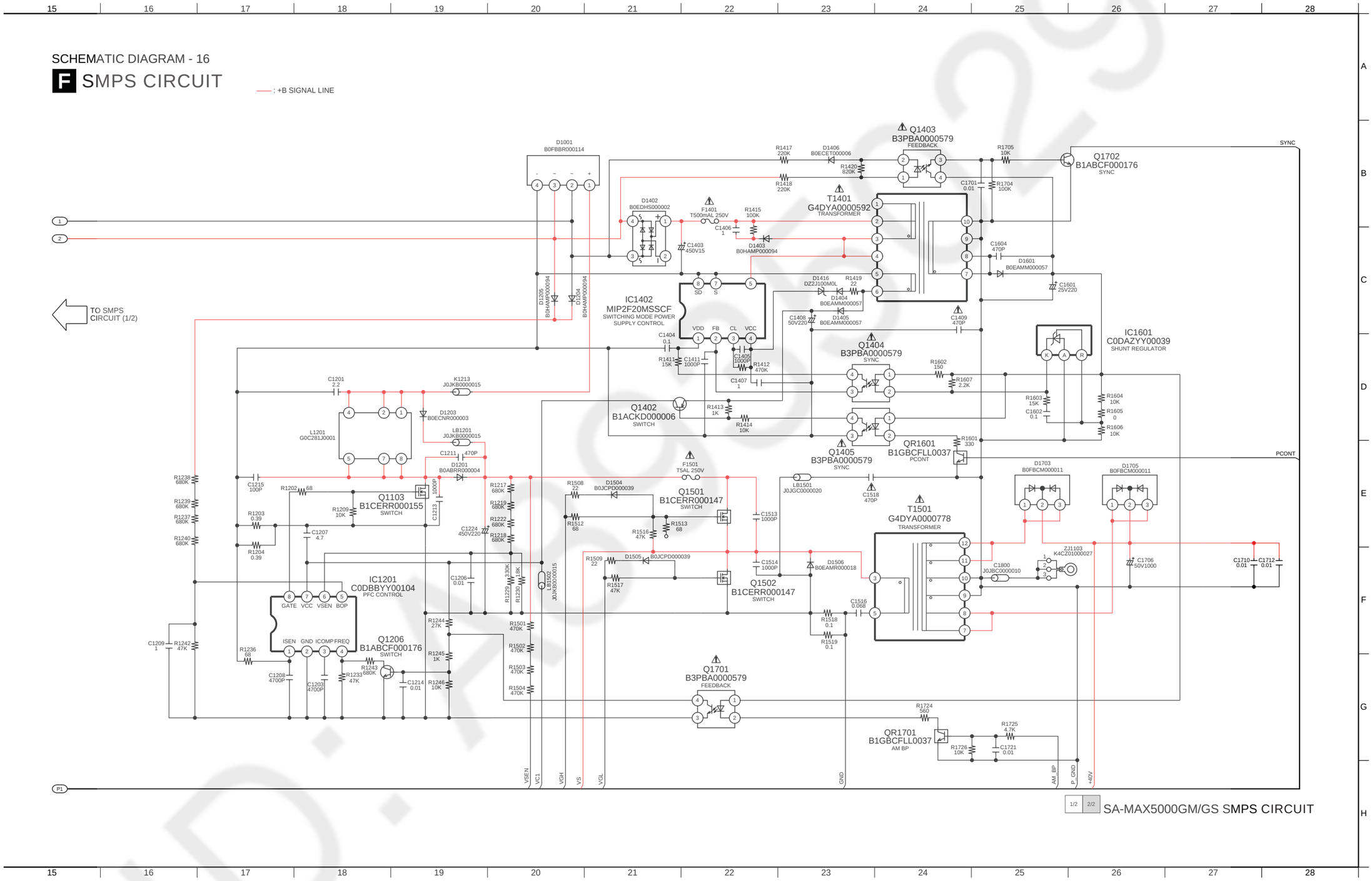


1/2 2/2 SA-MAX5000GM/GS SMPS CIRCUIT

# 7 Printed Circuit Board

## 7.1. Main P.C.B. (Side A)

**A** MAIN P.C.B. (RFKV5318EA)

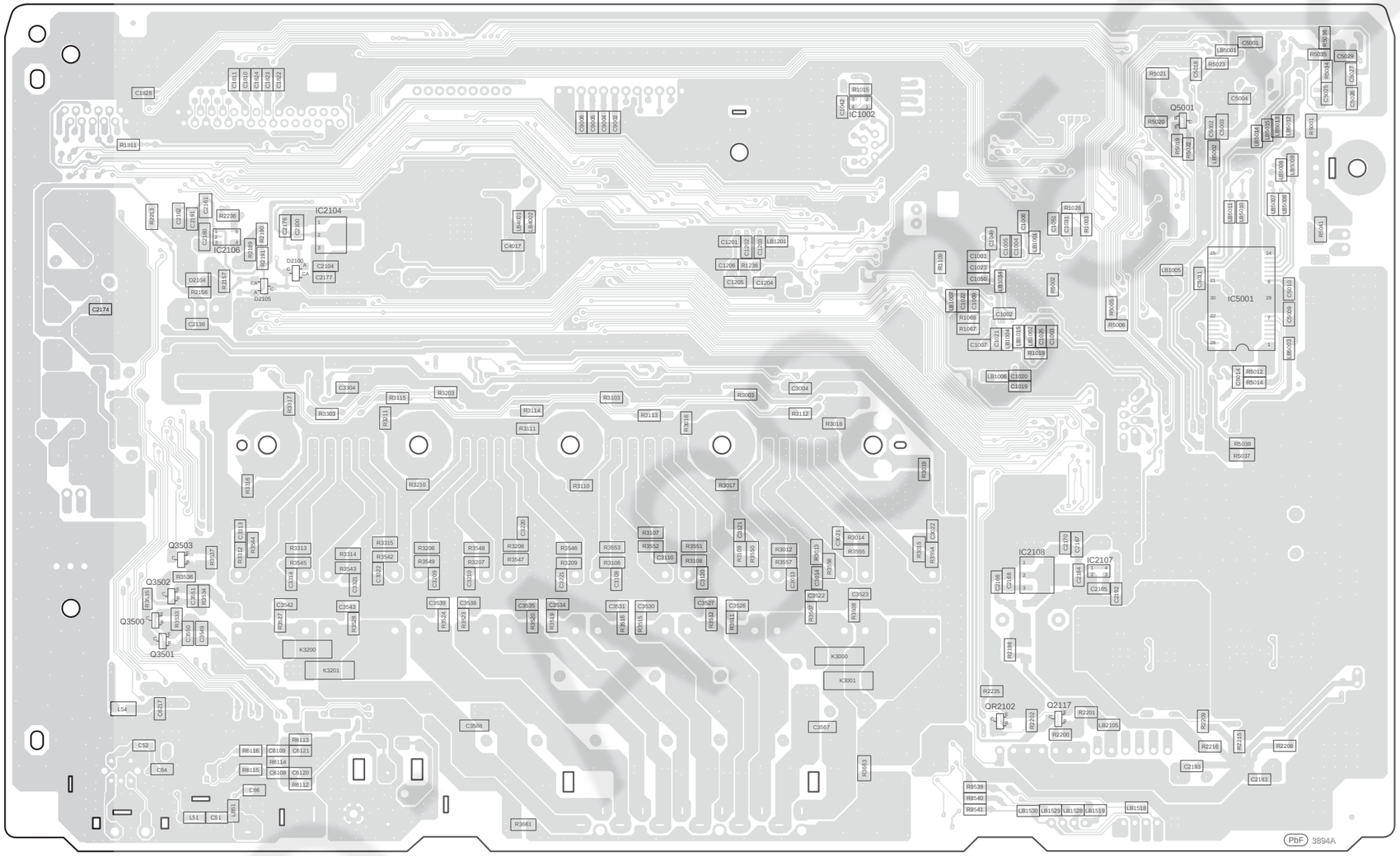


(SIDE A)

SA-MAX5000GM/GS
MAIN P.C.B.

## 7.2. Main P.C.B. (Side B)

**A** MAIN P.C.B. (RFKV5318EA)

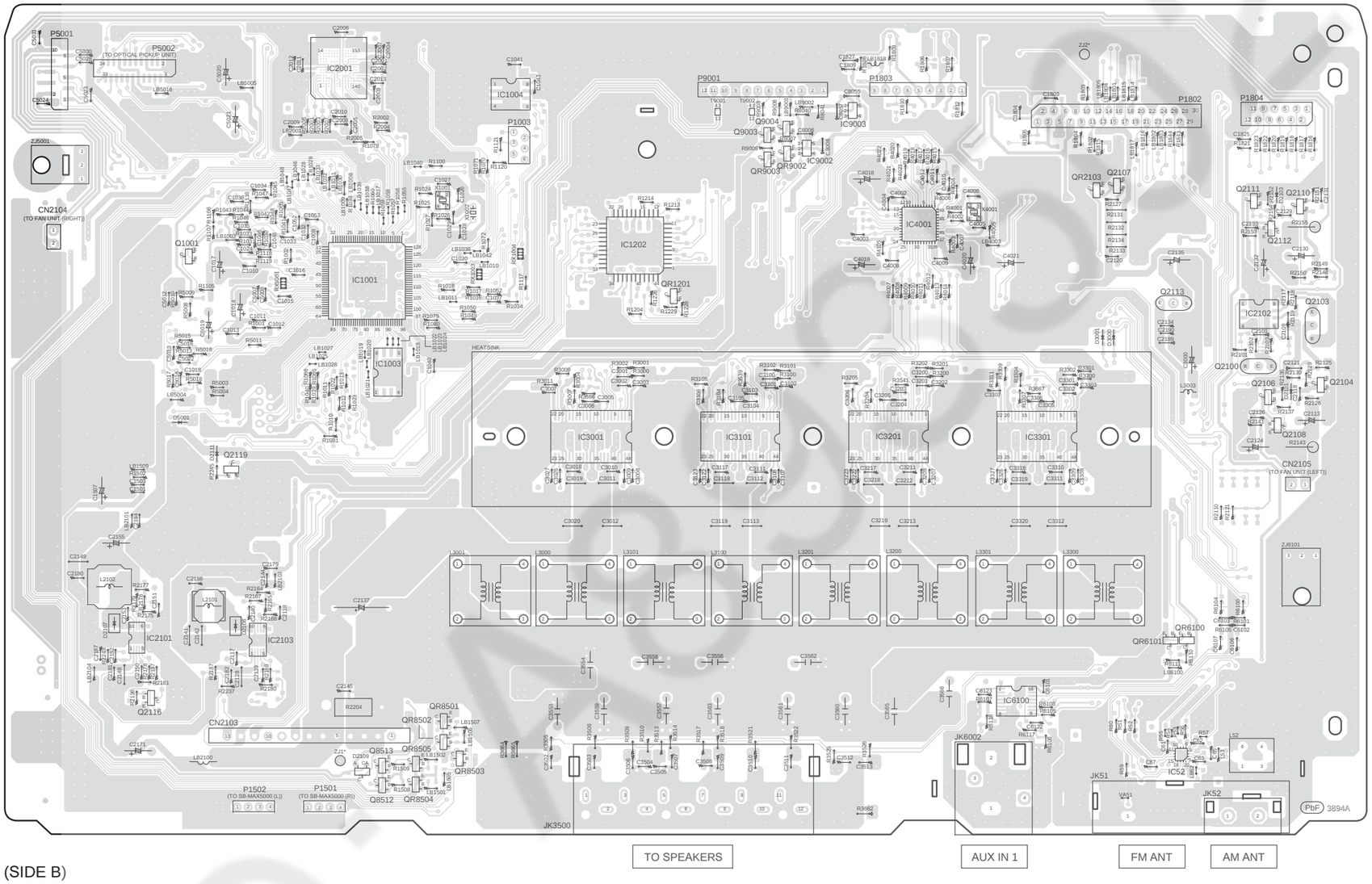


(SIDE B)

NOTE: " * " REF IS FOR INDICATION ONLY

SA-MAX5000GM/GS
MAIN P.C.B.

## 7.3. Panel and Mic P.C.B.

**B** PANEL P.C.B. (REP5316BA)

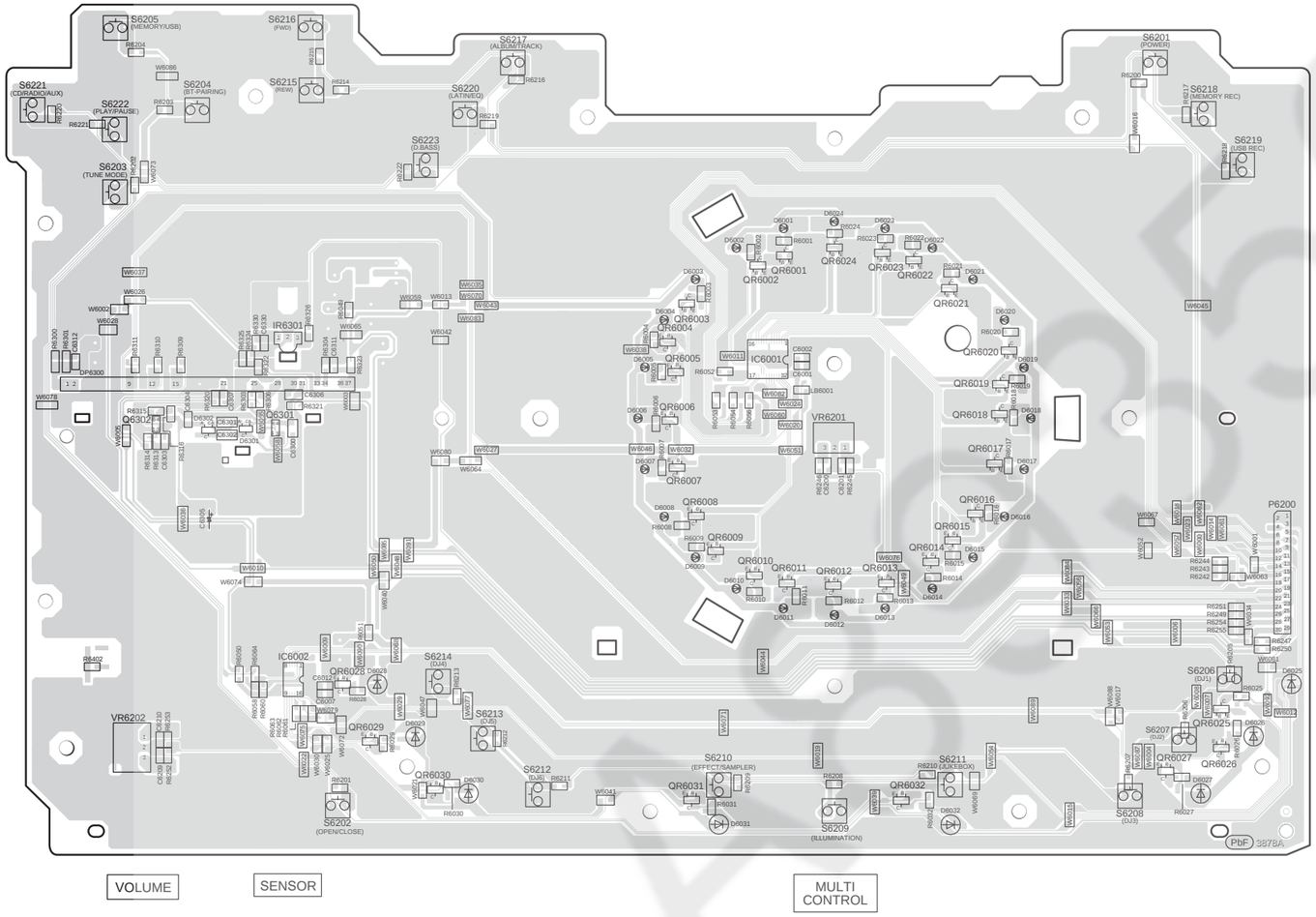


**C** MIC P.C.B. (REP5316BB)

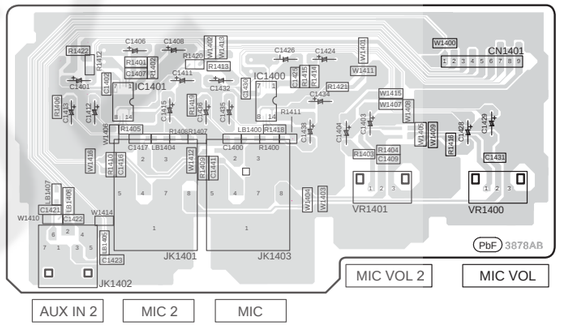


SA-MAX5000GM/GS
PANEL / MIC P.C.B.

## 7.4. SMPS P.C.B.

**F** SMPS P.C.B. (REP5304C)

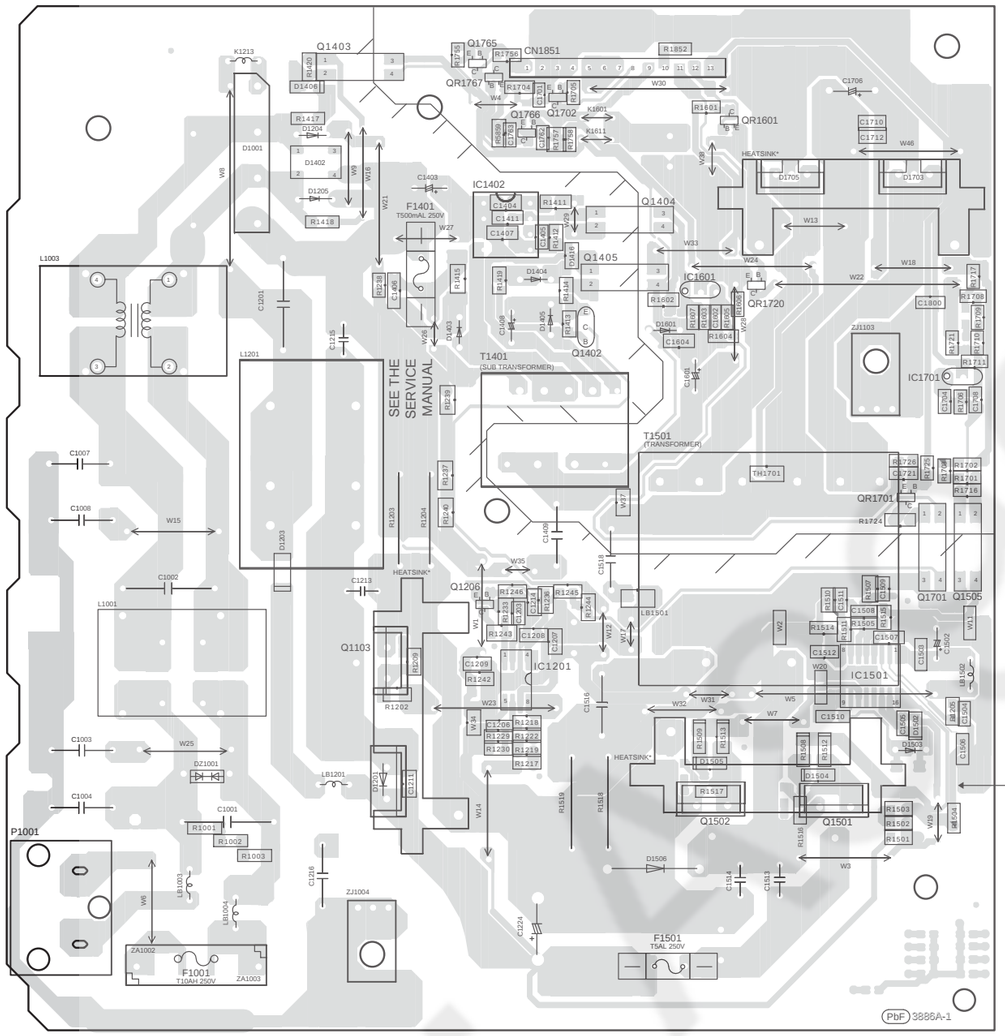


CAUTION
RISK OF ELECTRIC SHOCK
AC VOLTAGE LINE.
PLEASE DO NOT TOUCH THIS P.C.B

AC IN ~
220~240V 50Hz/60Hz

NOTE: " * " REF IS FOR INDICATION ONLY

SA-MAX5000GM/GS
SMPS P.C.B.

# 8 Exploded View and Replacement Parts List

## 8.1. Cabinet Parts Location 1

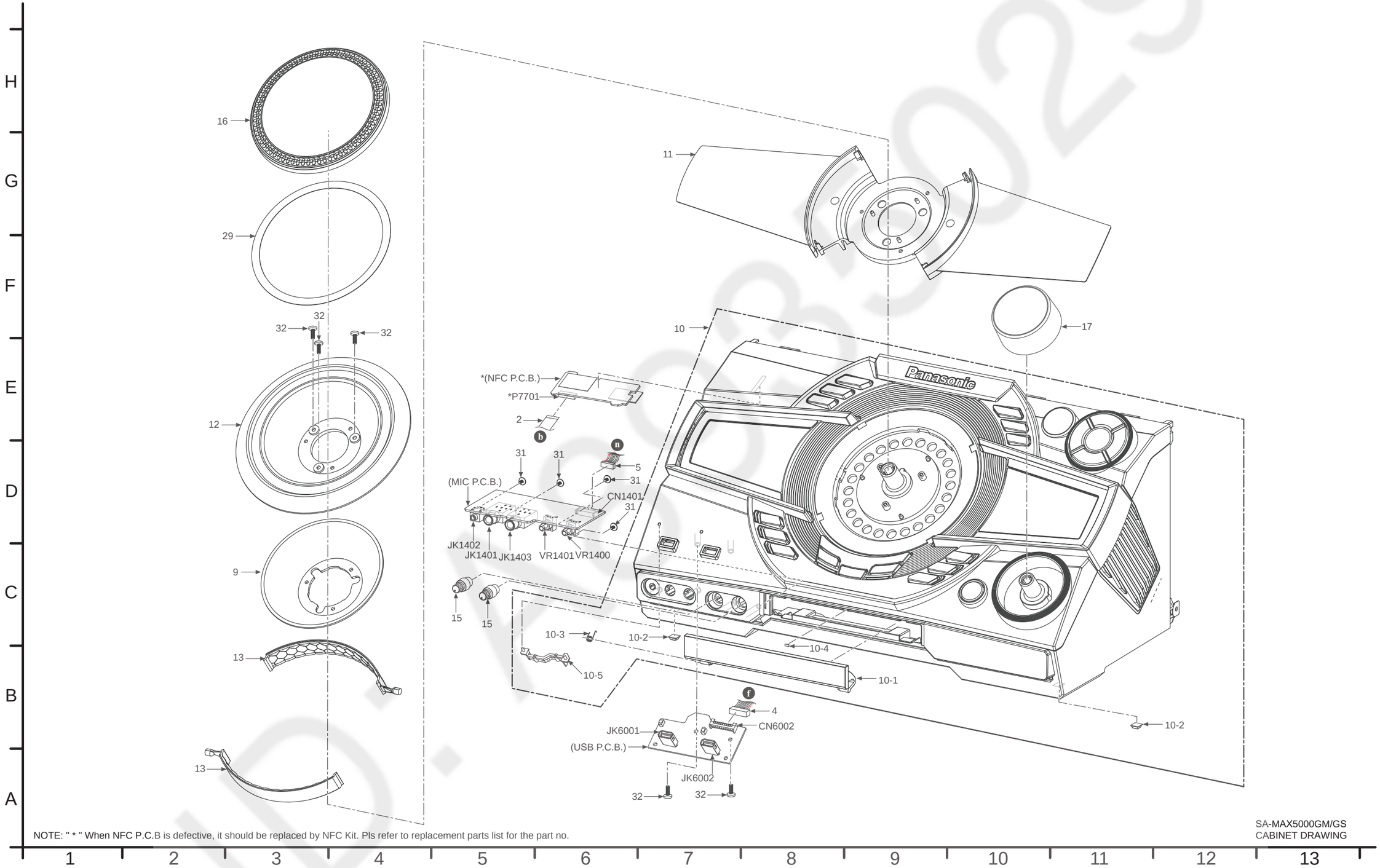


NOTE: " * " When NFC P.C.B is defective, it should be replaced by NFC Kit. Pls refer to replacement parts list for the part no.

SA-MAX5000GM/GS
CABINET DRAWING

## 8.2. Cabinet Parts Location 2

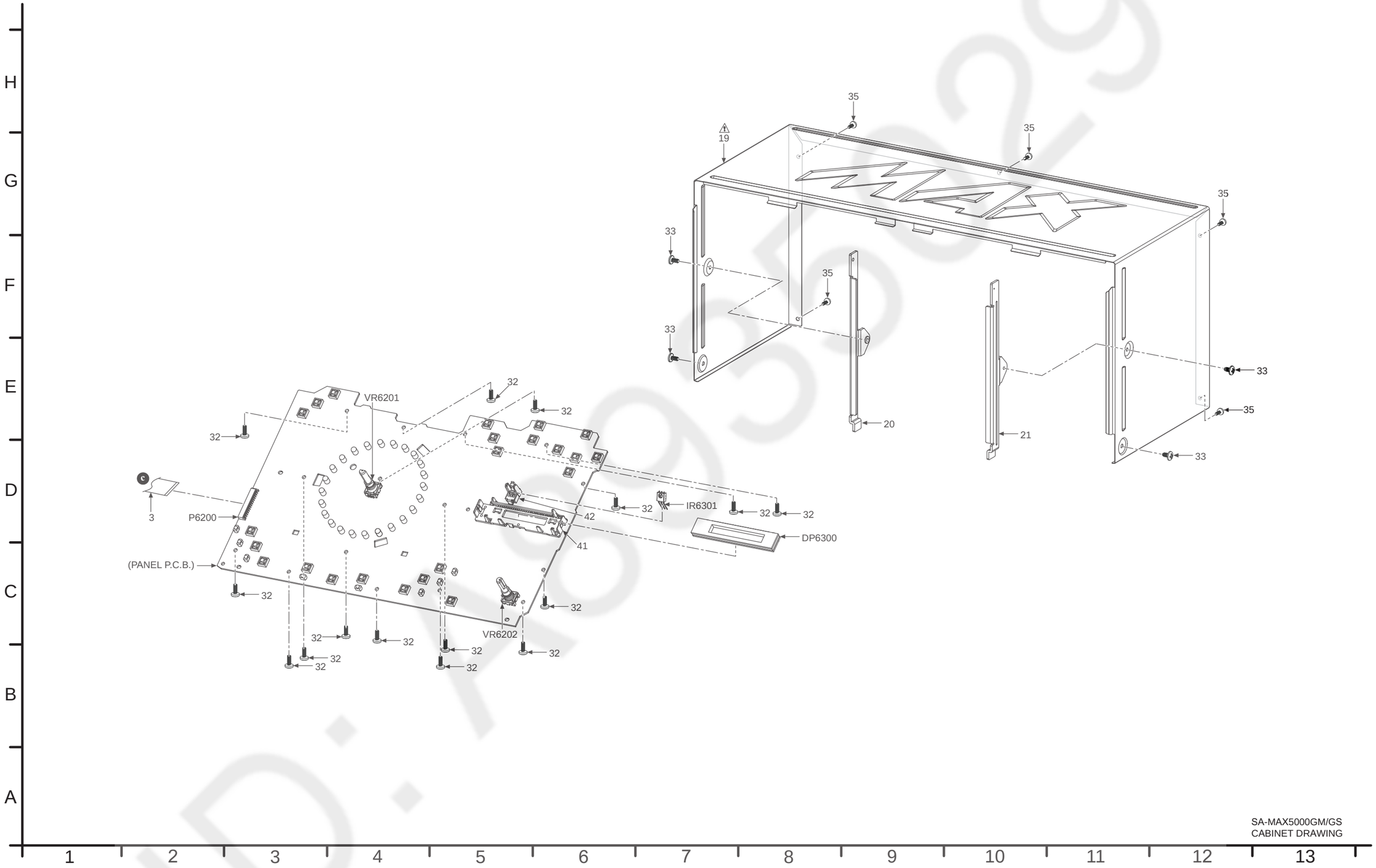

## 8.3. Cabinet Parts Location 3

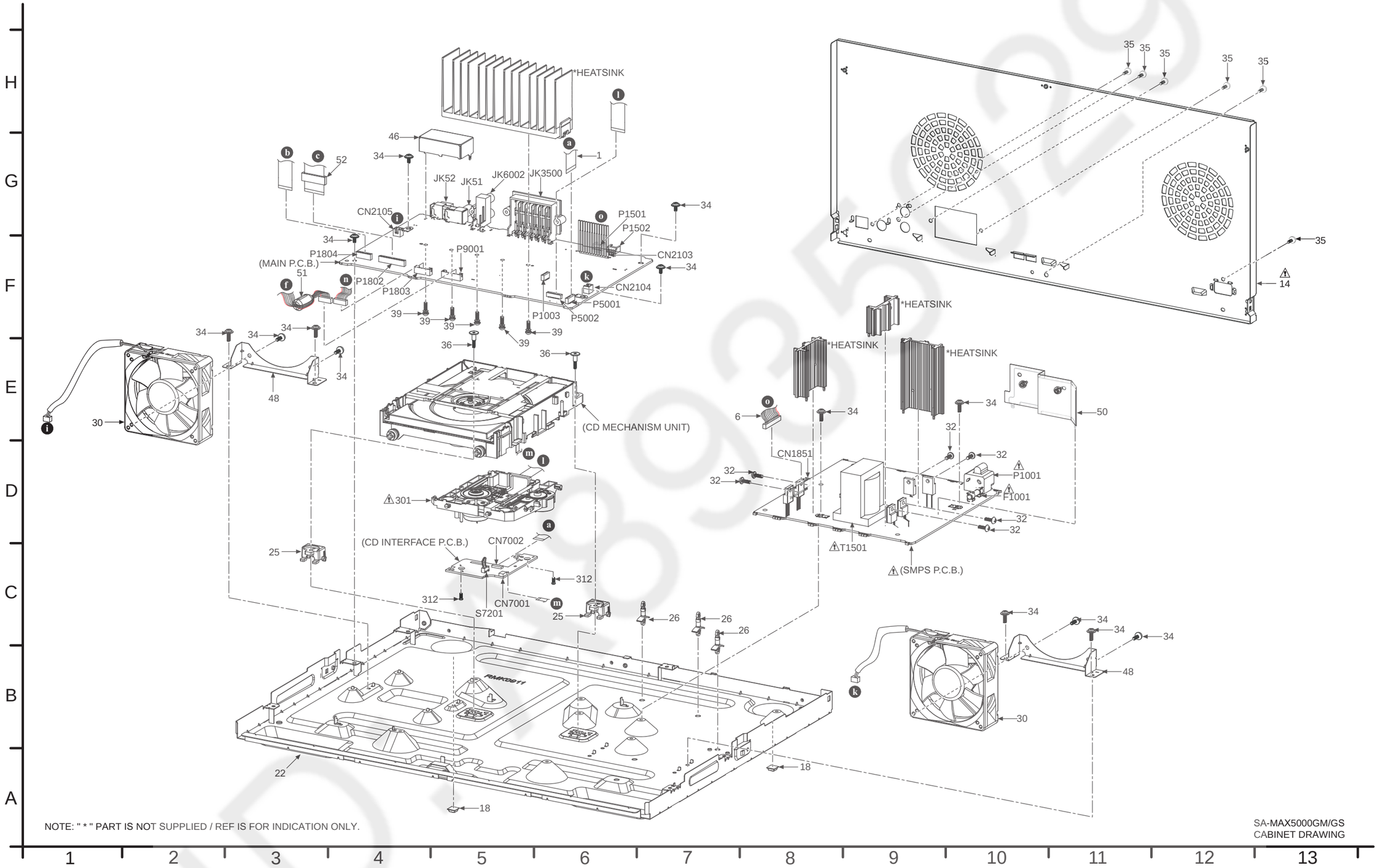


NOTE: " * " PART IS NOT SUPPLIED / REF IS FOR INDICATION ONLY.

SA-MAX5000GM/GS
CABINET DRAWING

## 8.4. Packaging

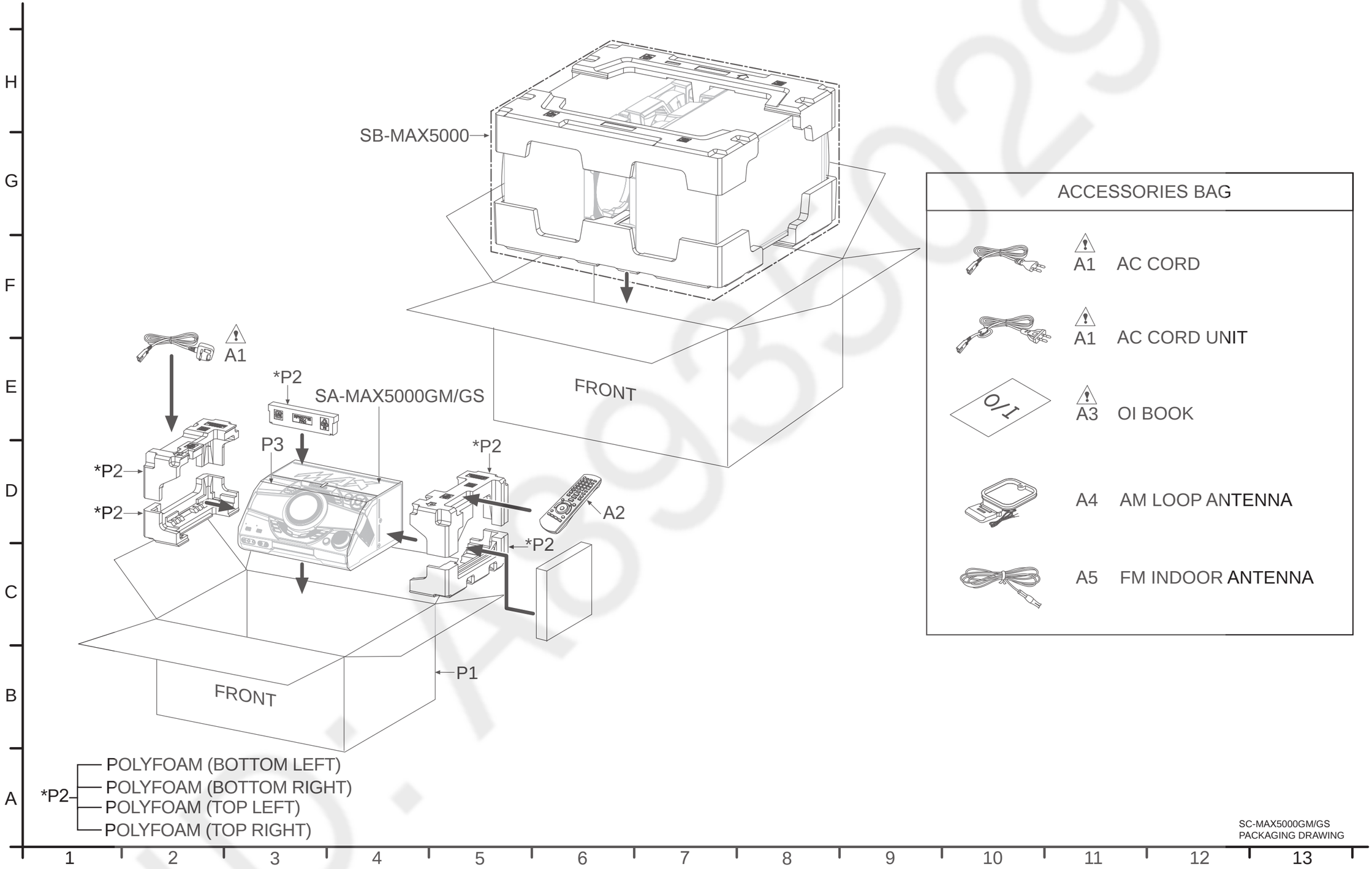

ID: A89935029

## 8.5. Mechanical Replacement Part List

**Important Safety Notice**

*Components identified by ⚠ mark have special characteristics important for safety.*
*When replacing any of these components, use only manufacturer's specified parts.*

**RTL (Retention Time Limited)**

**Note:** The marking (RTL) indicates that the Retention Time is Limited for this item.
After the discontinuation of this assembly in production, the item will continue to be available for a specific period of time. The retention period of availability is dependant on the type of assembly, and in accordance with the laws governing part and product retention. After the end of this period, the assembly will no longer be available.

**Note:**
- When replacing any of these components, be sure to use only manufacturer's specified parts shown in the replacement part list.
- The parenthesized indications on the Remarks column specify the destination & product color (Refer to the cover page for the information).
- Parts without these indications shall be used for all areas.
- This product uses a laser diode. Refer to "Precaution of Laser Diode".
- All parts mentioned are supplied by PMX unless indicated likewise.
- Reference for O/I book languages are as follows:

| | | | | | | | |
|---|---|---|---|---|---|---|---|
| Ar: | Arabic | Du: | Dutch | It: | Italian | Sp: | Spanish |
| Cf: | Canadian French | En: | English | Ko: | Korean | Sw: | Swedish |
| Cz: | Czech | Fr: | French | Po: | Polish | Co: | Traditional Chinese |
| Da: | Danish | Ge: | German | Ru: | Russian | Cn: | Simplified Chinese |
| Pe: | Persian | Ur: | Ukraine | Pr: | Portuguese | Fi: | Finnish |

| Safety | Ref. No. | Part No. | Part Name & Description | Qty | Remarks |
|---|---|---|---|---|---|
| | | | | | |
| | | | CABINET AND CHASSIS | | |
| | | | | | |
| | 1 | REE1929 | 10P FFC (MAIN-CD INTERFACE) | 1 | |
| | 2 | REE2144 | 12P FFC (NFC-MAIN) | 1 | |
| | 3 | REE2145 | 30P FFC (PANEL-MAIN) | 1 | |
| | 4 | TNMX021 | 12P WIRE (MIC-MAIN) | 1 | |
| | 5 | REX1951 | 9P WIRE (MIC-MAIN) | 1 | |
| | 6 | REX1702 | 13P WIRE (MAIN-SMPS) | 1 | |
| | 9 | RGC0056-S | LIGHT REFLECTOR | 1 | |
| | 10 | RFKGX5000GSK | FRONT PANEL ASS'Y | 1 | |
| | 10-1 | RGK2635-K | CD LID | 1 | |
| | 10-2 | RKAX0042-K | LEG CUSHION | 2 | |
| | 10-3 | RMB0982 | CD LID SPRING | 1 | |
| | 10-4 | RMGX0033A-K | CD LID CUSHION | 1 | |
| | 10-5 | RGL0830-Q | USB LIGHT PIECE | 1 | |
| | 11 | RGL0826-Q | LIGHT WING | 1 | |
| | 12 | RGL0827-Q | LIGHT ORNAMENT | 1 | |
| | 13 | RGL0840-Q | PATTERN LIGHT PIECE | 2 | |
| ⚠ | 14 | RGR0484E-G | REAR PANEL | 1 | |
| | 15 | RGW0450-K | MIC VOLUME KNOB | 2 | |

| Safety | Ref. No. | Part No. | Part Name & Description | Qty | Remarks |
|---|---|---|---|---|---|
| | 16 | RGW0448A-K | DJ TABLE | 1 | |
| | 17 | RGW0457-K | KNOB | 1 | |
| | 18 | RKAX0042-K | LEG CUSHION | 2 | |
| ⚠ | 19 | RKM0771-K | TOP CABINET | 1 | |
| | 20 | RMA2506-1 | SIDE ANGLE L | 1 | |
| | 21 | RMA2507-1 | SIDE ANGLE R | 1 | |
| | 22 | RMK0911 | BOTTOM CHASSIS | 1 | |
| | 25 | RMQX0382-3 | CD MECHA SUPPORT | 2 | |
| | 26 | RMX0510 | SMPS PCB SPACER | 3 | |
| | 29 | RMQ2552 | DJ SLIDER SHEET | 1 | |
| | 30 | L6FAYYYH0354 | FAN UNIT | 2 | |
| | 31 | RHD26016-1L | SCREW | 4 | |
| | 32 | RHD26046-L | SCREW | 26 | |
| | 33 | RHD30007-K2J | SCREW | 4 | |
| | 34 | RHD30111-31 | SCREW | 14 | |
| | 35 | RHD30119-S | SCREW | 11 | |
| | 36 | RHDX031008 | SCREW | 2 | |
| | 39 | RHD26078 | SCREW | 5 | |
| | 41 | RMN1049-1 | FL HOLDER | 1 | |
| | 42 | RMN1085-1 | IR HOLDER | 1 | |
| | 46 | RSC1230 | TUNER SHIELD | 1 | |
| | 48 | RMA2567 | FAN ANGLE | 2 | |
| | 50 | RXA0276 | SMPS SHIELD PLATE UNIT | 1 | |
| | 51 | J0KG00000011 | FERRITE CORE | 1 | |
| | 52 | J0KD00000162 | FERRITE CORE | 1 | |
| | | | | | |
| | | | TRAVERSE DECK | | |
| | | | | | |
| ⚠ | 301 | RAE1051Z-V | TRAVERSE ASS'Y | 1 | (E.S.D) |
| | 312 | XTN2+6GFJ | SCREW | 2 | |

| Safety | Ref. No. | Part No. | Part Name & Description | Qty | Remarks |
|---|---|---|---|---|---|
| | | | | | |
| | | | PACKING MATERI-ALS | | |
| | | | | | |
| | P1 | RPG0S90 | PACKING CASE | 1 | GS |
| | P1 | RFKZAX5000GM | PACKING CASE | 1 | GM |
| | P2 | RPN2771-1 | POLYFOAM | 1 | |
| | P3 | RPH0333 | MIRAMAT SHEET | 1 | |
| | | | | | |
| | | | ACCESSORIES | | |
| | | | | | |
| ⚠ | A1 | K2CP2YY00061 | AC CORD | 1 | |
| ⚠ | A1 | RFA3671 | AC CORD UNIT | 1 | |
| ⚠ | A1 | K2CT2YY00097 | AC CORD | 1 | |
| | A2 | N2QAYB001022 | REMOTE CONTROL | 1 | |
| ⚠ | A3 | RQT0A66-G | O/I BOOK (En/Cn,Ar) | 1 | |
| | A4 | N1DYYYY00011 | AM LOOP ANTENNA | 1 | |
| | A5 | RSAX0002 | FM INDOOR ANTENNA | 1 | |

ID: A89350029

## 8.6. Electrical Replacement Part List

**Important Safety Notice**

*Components identified by ⚠ mark have special characteristics important for safety.*
*When replacing any of these components, use only manufacturer's specified parts.*

**RTL (Retention Time Limited)**

**Note:** The marking (RTL) indicates that the Retention Time is Limited for this item.
After the discontinuation of this assembly in production, the item will continue to be available for a specific period of time. The retention period of availability is dependant on the type of assembly, and in accordance with the laws governing part and product retention. After the end of this period, the assembly will no longer be available.

**Note:**

- When replacing any of these components, be sure to use only manufacturer's specified parts shown in the replacement part list.
- The parenthesized indications on the Remarks column specify the destination & product color (Refer to the cover page for the information).
- Parts without these indications shall be used for all areas.
- This product uses a laser diode. Refer to "Precaution of Laser Diode".
- Capacitor value are in microfarads (uF) unless specified otherwise, P=Pico-farads (pF), F=Farads.
- Resistance values are in ohms, unless specified otherwise, 1K=1000 (OHM).
- All parts mentioned are supplied by Panasonic Mexico.
- Parts mentioned [SPG] in the Remarks column are supplied by JAPAN.

**E.S.D. standards for Electrostatically Sensitive Devices, refer to "PREVENTION OF ELECTROSTATIC DISCHARGE (ESD) TO ELECTROSTATIC SENSITIVE (ES) DEVICES" section.**

| Safety | Ref. No. | Parts No. | | Parts name & Description | Qty | Remarks |
|---|---|---|---|---|---|---|
| | | SA-MAX5000PS | SA-MAX5000GS/GM | | | |
| | PCB3 | RFKV5135EC | RFKV5318EB | NFC KIT ASS'Y | 1 | |
| | PCB4 | REP5316AA | REP5316BA | PANEL P.C.B | 1 | (RTL) |
| | PCB5 | REP5316AB | REP5316BB | MIC P.C.B | 1 | (RTL) |
| | PCB6 | REP5316AC | REP5316BC | USB P.C.B | 1 | (RTL) |
| ⚠ | PCB7 | REP5304E | REP5304C | SMPS P.C.B | 1 | (RTL) |
| | LB5006 | D0GBR00J0004 | J0JBC0000010 | INDUCTOR | 1 | |
| | LB5007 | D0GBR00J0004 | J0JBC0000010 | INDUCTOR | 1 | |
| | LB5008 | D0GBR00J0004 | J0JBC0000010 | INDUCTOR | 1 | |
| | LB5009 | D0GBR00J0004 | J0JBC0000010 | INDUCTOR | 1 | |
| | LB5010 | D0GBR00J0004 | J0JBC0000010 | INDUCTOR | 1 | |
| | LB5011 | D0GBR00J0004 | J0JBC0000010 | INDUCTOR | 1 | |
| | LB5012 | D0GBR00J0004 | J0JBC0000010 | INDUCTOR | 1 | |
| | LB5013 | D0GBR00J0004 | J0JBC0000010 | INDUCTOR | 1 | |
| | LB5014 | D0GBR00J0004 | J0JBC0000010 | INDUCTOR | 1 | |
| | LB5015 | D0GBR00J0004 | J0JBC0000010 | INDUCTOR | 1 | |
| | R1011 | D0GB221JA065 | J0JCC0000309 | INDUCTOR | 1 | |
| | R1012 | D0GB221JA065 | J0JCC0000309 | INDUCTOR | 1 | |
| | R1033 | D0GB103JA065 | D0GB562JA065 | 5.6K 1/10W | 1 | |
| | R1055 | D0GA101JA023 | J0JCC0000287 | INDUCTOR | 1 | |
| | R1056 | D0GA101JA023 | J0JCC0000287 | INDUCTOR | 1 | |
| | R1057 | D0GA101JA023 | J0JYC0000100 | INDUCTOR | 1 | |
| | R1058 | D0GA101JA023 | J0JCC0000287 | INDUCTOR | 1 | |
| | R1059 | D0GA101JA023 | J0JCC0000287 | INDUCTOR | 1 | |
| | R1060 | D0GA101JA023 | J0JCC0000287 | INDUCTOR | 1 | |
| | R1078 | D0GA101JA023 | J0JYC0000100 | INDUCTOR | 1 | |
| | R1202 | ERJ14YJ220U | ERJ14YJ680U | 68 1/2W | 1 | SMPS |
| | R1229 | D1BB3301A074 | D1BD3303A066 | 330K 1/8W | 1 | SMPS |
| | R1508 | ERJ14YJ4R7U | ERJ14YJ220U | 22 1/2W | 1 | SMPS |
| | R1509 | ERJ14YJ4R7U | ERJ14YJ220U | 22 1/2W | 1 | SMPS |
| | R1512 | ERJ14YJ220U | ERJ14YJ680U | 68 1/2W | 1 | SMPS |

| Safety | Ref. No. | Parts No. | | Parts name & Description | Qty | Remarks |
|---|---|---|---|---|---|---|
| | | SA-MAX5000PS | SA-MAX5000GS/GM | | | |
| | R1513 | ERJ14YJ220U | ERJ14YJ680U | 68 1/2W | 1 | SMPS |
| | R1852 | D0GB103JA065 | D0GB393JA065 | 39K 1/10W | 1 | SMPS |
| ⚠ | C1001 | F0CAF104A105 | F0CAF474A105 | 0.47uF | 1 | SMPS |
| | C1207 | F1K1E4750002 | F1K1H475A234 | 4.7uF 50V | 1 | SMPS |
| | C1406 | F1K2J2220002 | F1K2J102A014 | 1000pF 630V | 1 | SMPS |
| | C1408 | F2A1E221B422 | F2A1H221B436 | 220uF 50V | 1 | SMPS |
| | C1502 | F2A1E1010150 | F2A1H101A147 | 100uF 50V | 1 | SMPS |
| | C1503 | F1K1E4750002 | F1K1H475A234 | 4.7uF 50V | 1 | SMPS |
| | C1513 | F1B3D221A132 | F1B3D102A132 | 1000pF 2000V | 1 | SMPS |
| | C1514 | F1B3D221A132 | F1B3D102A132 | 1000pF 2000V | 1 | SMPS |
| | C1800 | D0GDR00J0004 | J0JBC0000010 | INDUCTOR | 1 | SMPS |
| | C3556 | ECQV1H105JL3 | ECQV1H225JL3 | 2.2uF 50V | 1 | |
| | C3557 | ECQV1H105JL3 | ECQV1H225JL3 | 2.2uF 50V | 1 | |
| | C3558 | ECQV1H105JL3 | ECQV1H225JL3 | 2.2uF 50V | 1 | |
| | C3559 | ECQV1H105JL3 | ECQV1H225JL3 | 2.2uF 50V | 1 | |
| | C3560 | ECQV1H105JL3 | ECQV1H225JL3 | 2.2uF 50V | 1 | |
| | C3561 | ECQV1H105JL3 | ECQV1H225JL3 | 2.2uF 50V | 1 | |
| | C3562 | ECQV1H105JL3 | ECQV1H225JL3 | 2.2uF 50V | 1 | |
| | C3563 | ECQV1H105JL3 | ECQV1H225JL3 | 2.2uF 50V | 1 | |
| ⚠ | L1002 | G0B502J00005 | - | LINE FILTER | 1 | |
| | R1423 | D0GBR00J0004 | - | 0 1/10W | 1 | |
| | R1424 | D0GBR00J0004 | - | 0 1/10W | 1 | |
| | R1425 | D0GBR00J0004 | - | 0 1/10W | 1 | |
| | R1426 | D0GBR00J0004 | - | 0 1/10W | 1 | |
| | R2122 | D0GBR00J0004 | - | 0 1/10W | 1 | PS |
| | R6401 | D0GBR00J0004 | - | 0 1/10W | 1 | |
| ⚠ | C1006 | F0CAF224A105 | - | 0.22uF | 1 | |
| | IC1400 | - | C1AB00003130 | IC | 1 | (E.S.D) |
| | D6402 | - | B0EAMM000057 | DIODE | 1 | (E.S.D) |
| | VR1401 | - | EVUE27FK2B53 | MIC JOG | 1 | MIC |
| | K1213 | - | J0JKB0000015 | INDUCTOR | 1 | MIC |
| ⚠ | L1001 | - | G0B223J00001 | LINE FILTER | 1 | SMPS |
| ⚠ | L1003 | - | G0B223J00001 | LINE FILTER | 1 | SMPS |
| | LB1003 | - | J0JKB0000015 | INDUCTOR | 1 | SMPS |
| | LB1004 | - | J0JKB0000015 | INDUCTOR | 1 | SMPS |
| | LB1201 | - | J0JKB0000015 | INDUCTOR | 1 | SMPS |
| | LB1400 | - | J0JBC0000019 | INDUCTOR | 1 | MIC |
| | JK1401 | - | K2HB107B0001 | JK PIN | 1 | MIC |
| | R1410 | - | D0GBR00J0004 | 0 1/10W | 1 | MIC |
| | R2121 | - | D0GBR00J0004 | 0 1/10W | 1 | |
| | R6402 | - | D0GBR00J0004 | 0 1/10W | 1 | |
| | W34 | - | D0GFR00J0005 | 0 1/4W | 1 | |
| | R1400 | - | D0GB681JA065 | 680 1/10W | 1 | MIC |
| | R1411 | - | D0GB561JA065 | 560 1/10W | 1 | MIC |
| | R1413 | - | D0GB681JA065 | 680 1/10W | 1 | MIC |
| | R1414 | - | D0GB561JA065 | 560 1/10W | 1 | MIC |
| | R1415 | - | D0GB473JA065 | 47K 1/10W | 1 | MIC |
| | R1416 | - | D0GB101JA065 | 100 1/10W | 1 | MIC |
| | R1417 | - | D0GB472JA065 | 4.7K 1/10W | 1 | MIC |
| | R1418 | - | D0GB473JA065 | 47K 1/10W | 1 | MIC |
| | R1419 | - | D0GB104JA065 | 100K 1/10W | 1 | MIC |
| | R1421 | - | D0GB221JA065 | 220 1/10W | 1 | MIC |
| | R3012 | - | D0GD6R8JA052 | 6.8 1/8W | 1 | |
| | R3013 | - | D0GD6R8JA052 | 6.8 1/8W | 1 | |
| | R3014 | - | D0GD6R8JA052 | 6.8 1/8W | 1 | |
| | R3015 | - | D0GD6R8JA052 | 6.8 1/8W | 1 | |
| | R3106 | - | D0GD6R8JA052 | 6.8 1/8W | 1 | |
| | R3107 | - | D0GD6R8JA052 | 6.8 1/8W | 1 | |
| | R3108 | - | D0GD6R8JA052 | 6.8 1/8W | 1 | |
| | R3109 | - | D0GD6R8JA052 | 6.8 1/8W | 1 | |
| | R3206 | - | D0GD6R8JA052 | 6.8 1/8W | 1 | |
| | R3207 | - | D0GD6R8JA052 | 6.8 1/8W | 1 | |
| | R3208 | - | D0GD6R8JA052 | 6.8 1/8W | 1 | |
| | R3209 | - | D0GD6R8JA052 | 6.8 1/8W | 1 | |
| | R3312 | - | D0GD6R8JA052 | 6.8 1/8W | 1 | |
| | R3313 | - | D0GD6R8JA052 | 6.8 1/8W | 1 | |

| Safety | Ref. No. | Parts No. | | Parts name & Description | Qty | Remarks |
|---|---|---|---|---|---|---|
| | | SA-MAX5000PS | SA-MAX5000GS/GM | | | |
| | R3314 | - | D0GD6R8JA052 | 6.8 1/8W | 1 | |
| | R3315 | - | D0GD6R8JA052 | 6.8 1/8W | 1 | |
| | R3542 | - | D0GD6R8JA052 | 6.8 1/8W | 1 | |
| | R3543 | - | D0GD6R8JA052 | 6.8 1/8W | 1 | |
| | R3544 | - | D0GD6R8JA052 | 6.8 1/8W | 1 | |
| | R3545 | - | D0GD6R8JA052 | 6.8 1/8W | 1 | |
| | R3546 | - | D0GD6R8JA052 | 6.8 1/8W | 1 | |
| | R3547 | - | D0GD6R8JA052 | 6.8 1/8W | 1 | |
| | R3548 | - | D0GD6R8JA052 | 6.8 1/8W | 1 | |
| | R3549 | - | D0GD6R8JA052 | 6.8 1/8W | 1 | |
| | R3550 | - | D0GD6R8JA052 | 6.8 1/8W | 1 | |
| | R3551 | - | D0GD6R8JA052 | 6.8 1/8W | 1 | |
| | R3552 | - | D0GD6R8JA052 | 6.8 1/8W | 1 | |
| | R3553 | - | D0GD6R8JA052 | 6.8 1/8W | 1 | |
| | R3554 | - | D0GD6R8JA052 | 6.8 1/8W | 1 | |
| | R3555 | - | D0GD6R8JA052 | 6.8 1/8W | 1 | |
| | R3556 | - | D0GD6R8JA052 | 6.8 1/8W | 1 | |
| | R3557 | - | D0GD6R8JA052 | 6.8 1/8W | 1 | |
| | C14 | - | F1G1H1R5A831 | 1.5pF 50V | 1 | |
| | C15 | - | F1G0J1050007 | 1uF 6.3V | 1 | |
| | C16 | - | F1G1HR90A810 | 0.90pF 50V | 1 | |
| | C17 | - | F1G1HR90A810 | 0.90pF 50V | 1 | |
| ⚠ | C1002 | - | F0CAF104A105 | 0.1uF | 1 | SMPS |
| ⚠ | C1003 | - | F1BAF471A215 | 470pF | 1 | SMPS |
| ⚠ | C1004 | - | F1BAF471A215 | 470pF | 1 | SMPS |
| | C1213 | - | F1B3D102A132 | 1000pF 2000V | 1 | SMPS |
| | C1215 | - | F1B3D101A132 | 100pF 2000V | 1 | SMPS |
| ⚠ | C1216 | - | F1BAF471A215 | 470pF | 1 | SMPS |
| | C1400 | - | F1H1H102B047 | 1000pF 50V | 1 | MIC |
| | C1416 | - | F1H1H103B047 | 0.01uF 50V | 1 | MIC |
| | C1424 | - | F2A1H1R0A213 | 1.0uF 50V | 1 | MIC |
| | C1425 | - | F1H1H103B047 | 0.01uF 50V | 1 | MIC |
| | C1426 | - | F2A1H1R0A213 | 1.0uF 50V | 1 | MIC |
| | C1428 | - | F2A1H4R7A218 | 4.7uF 50V | 1 | MIC |
| | C1429 | - | F2A1HR10A015 | 0.10uF 50V | 1 | MIC |
| | C1430 | - | F1H1H470B052 | 47pF 50V | 1 | MIC |
| | C1431 | - | F1H1H472B047 | 4700pF 50V | 1 | MIC |
| | C1432 | - | F2A1H4R7A213 | 4.7uF 50V | 1 | MIC |
| | C1434 | - | F2A1C100A207 | 10uF 16V | 1 | MIC |
| | C1435 | - | F2A1C1000096 | 10uF 16V | 1 | MIC |
| | C1436 | - | F2A1H1R0A213 | 1.0uF 50V | 1 | MIC |
| | C1438 | - | F2A1HR10A015 | 0.10uF 50V | 1 | MIC |
| | C3013 | - | F1H1H122B047 | 1200pF 50V | 1 | |
| | C3014 | - | F1H1H122B047 | 1200pF 50V | 1 | |
| | C3021 | - | F1H1H122B047 | 1200pF 50V | 1 | |
| | C3022 | - | F1H1H122B047 | 1200pF 50V | 1 | |
| | C3109 | - | F1H1H122B047 | 1200pF 50V | 1 | |
| | C3110 | - | F1H1H122B047 | 1200pF 50V | 1 | |
| | C3120 | - | F1H1H122B047 | 1200pF 50V | 1 | |
| | C3121 | - | F1H1H122B047 | 1200pF 50V | 1 | |
| | C3209 | - | F1H1H122B047 | 1200pF 50V | 1 | |
| | C3210 | - | F1H1H122B047 | 1200pF 50V | 1 | |
| | C3220 | - | F1H1H122B047 | 1200pF 50V | 1 | |
| | C3221 | - | F1H1H122B047 | 1200pF 50V | 1 | |
| | C3313 | - | F1H1H122B047 | 1200pF 50V | 1 | |
| | C3314 | - | F1H1H122B047 | 1200pF 50V | 1 | |
| | C3321 | - | F1H1H122B047 | 1200pF 50V | 1 | |
| | C3322 | - | F1H1H122B047 | 1200pF 50V | 1 | |
| | C3502 | - | F1H1H104B047 | 0.1uF 50V | 1 | |
| | C3503 | - | F1H1H104B047 | 0.1uF 50V | 1 | |
| | C3504 | - | F1H1H104B047 | 0.1uF 50V | 1 | |
| | C3505 | - | F1H1H104B047 | 0.1uF 50V | 1 | |
| | C3506 | - | F1H1H104B047 | 0.1uF 50V | 1 | |
| | C3507 | - | F1H1H104B047 | 0.1uF 50V | 1 | |
| | C3508 | - | F1H1H104B047 | 0.1uF 50V | 1 | |
| | C3509 | - | F1H1H104B047 | 0.1uF 50V | 1 | |

| Safety | Ref. No. | Parts No. | | Parts name & Description | Qty | Remarks |
|---|---|---|---|---|---|---|
| | | SA-MAX5000PS | SA-MAX5000GS/GM | | | |
| | C3510 | - | F1H1H104B047 | 0.1uF 50V | 1 | |
| | C3511 | - | F1H1H104B047 | 0.1uF 50V | 1 | |
| | C3512 | - | F1H1H104B047 | 0.1uF 50V | 1 | |
| | C3513 | - | F1H1H104B047 | 0.1uF 50V | 1 | |
| | C5023 | - | F1H1H101B052 | 100pF 50V | 1 | |
| | C5024 | - | F1H1H101B052 | 100pF 50V | 1 | |
| | C5025 | - | F1H1H101B052 | 100pF 50V | 1 | |
| | C5026 | - | F1H1H101B052 | 100pF 50V | 1 | |
| | C5027 | - | F1H1H101B052 | 100pF 50V | 1 | |
| | C5028 | - | F1H1H101B052 | 100pF 50V | 1 | |
| | C5029 | - | F1H1H101B052 | 100pF 50V | 1 | |
| | C5030 | - | F1H1H101B052 | 100pF 50V | 1 | |
| | C5031 | - | F1H1H101B052 | 100pF 50V | 1 | |

MMH1605

ID: A8935029