PSG1603007CE

Service Manual

CD Stereo System

Model No. SA-MAX5000PN
SA-MAX5000PS

Product Color: (K)...Black Type

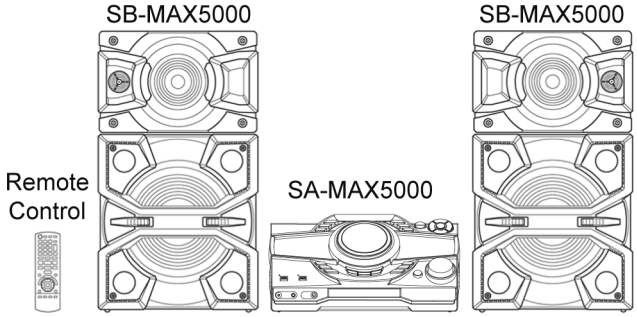

Please refer to the original service manual for:
- **CD Mechanism Unit Order No. PSG1303059AE**
- **Speaker system SB-MAX5000PN/PS, Order No. PSG1603009CE**

⚠ WARNING

This service information is designed for experienced repair technicians only and is not designed for use by the general public. It does not contain warnings or cautions to advise non-technical individuals of potential dangers in attempting to service a product. Products powered by electricity should be serviced or repaired only by experienced professional technicians. Any attempt to service or repair the product or products dealt with in this service information by anyone else could result in serious injury or death.

IMPORTANT SAFETY NOTICE

There are special components used in this equipment which are important for safety. These parts are marked by ⚠ in the Schematic Diagrams, Circuit Board Diagrams, Exploded Views and Replacement Parts List. It is essential that these critical parts should be replaced with manufacturer's specified parts to prevent shock, fire or other hazards. Do not modify the original design without permission of manufacturer.

TABLE OF CONTENTS

PAGE

1 Safety Precautions ---------- **3**
1.1. General Guidelines ---------- 3
1.2. Before Repair and Adjustment ---------- 4
1.3. Protection Circuitry ---------- 4
1.4. Safety Parts Information ---------- 5
2 Warning ---------- **6**
2.1. Prevention of Electrostatic Discharge (ESD) to Electrostatically Sensitive (ES) Devices ---------- 6
2.2. Precaution of Laser Diode ---------- 6
2.3. General description about Lead Free Solder (PbF) ---------- 7
2.4. Handling Precautions for Traverse Ass'y ---------- 7
2.5. Grounding for electrostatic breakdown prevention ---------- 8
3 Service Navigation ---------- **9**
3.1. Service Information ---------- 9
3.2. Software Update Procedure ---------- 9
4 Specifications ---------- **10**
5 Location of Controls and Components ---------- **11**
5.1. Remote Control Key Button Operation ---------- 11
5.2. Main Unit Key Button Operation ---------- 12
6 Service Mode ---------- **13**
6.1. Cold-Start ---------- 13
6.2. Sales Demonstration Lock Function ---------- 13
6.3. Doctor Mode Table ---------- 14
6.4. Self-Diagnostic Mode ---------- 16
6.5. Self-Diagnostic Error Code Table ---------- 16
7 Troubleshooting Guide ---------- **18**
7.1. No Power or No Display ---------- 18
7.2. Bluetooth® Pairing Failure ---------- 18

Panasonic®

© Panasonic Corporation 2016. All rights reserved. Unauthorized copying and distribution is a violation of law.

7.3. No Key Function ---------- 18
7.4. No Remote Control Function ---------- 18
7.5. No NFC ---------- 19
7.6. USB Device Cannot Detect ---------- 19
7.7. No Output Sound ---------- 20
7.8. Check Point ---------- 21
8 Disassembly and Assembly Instructions ---------- 22
8.1. Type of Screws ---------- 22
8.2. Disassembly Flow Chart ---------- 23
8.3. Main Components and P.C.B. Locations ---------- 23
8.4. Disassembly of Top Cabinet ---------- 24
8.5. Disassembly of Front Panel Unit ---------- 24
8.6. Disassembly of Panel P.C.B. ---------- 25
8.7. Disassembly NFC P.C.B. ---------- 26
8.8. Disassembly of USB P.C.B. ---------- 26
8.9. Disassembly of Mic P.C.B. ---------- 26
8.10. Disassembly of SMPS P.C.B. ---------- 27
8.11. Disassembly of Main P.C.B. ---------- 27
8.12. Disassembly of CD Mechanism Unit ---------- 28
8.13. Disassembly of CD Interface P.C.B. ---------- 28
9 Service Position ---------- 29
9.1. Checking of Panel P.C.B. ---------- 29
9.2. Checking of SMPS P.C.B. ---------- 29
9.3. Checking of Main P.C.B. ---------- 30
10 Block Diagram ---------- 31
10.1. System Control ---------- 31
10.2. Audio ---------- 35
10.3. Power Supply ---------- 38
11 Wiring Connection Diagram ---------- 40
12 Schematic Diagram ---------- 41
12.1. Schematic Diagram Notes ---------- 41
12.2. Main (Damp) Circuit (1/2) ---------- 43
12.3. Main (Damp) Circuit (2/2) ---------- 44
12.4. Main (Fan LED) Circuit ---------- 45
12.5. Main (CD Motor Driver) Circuit ---------- 46
12.6. Main (VREG Fan) Circuit (1/2) ---------- 47
12.7. Main (VREG Fan) Circuit (2/2) ---------- 48
12.8. Main (Tuner AUX) Circuit ---------- 49
12.9. Main (IO Expansion) Circuit ---------- 50
12.10. Main (MICON) Circuit (1/2) ---------- 51
12.11. Main (MICON) Circuit (2/2) ---------- 52
12.12. Panel Circuit (1/3) ---------- 53
12.13. Panel Circuit (2/3) ---------- 54
12.14. Panel Circuit (3/3) ---------- 55
12.15. Mic, USB and CD Interface Circuit ---------- 56
12.16. SMPS Circuit (1/2) ---------- 57
12.17. SMPS Circuit (2/2) ---------- 58
13 Printed Circuit Board ---------- 59
13.1. Main P.C.B. (Side A) ---------- 59
13.2. Main P.C.B. (Side B) ---------- 60
13.3. Panel, Mic and USB P.C.B. ---------- 61
13.4. SMPS and CD Interface P.C.B. ---------- 62
14 Voltage and Waveform Measurement ---------- 63
14.1. Voltage Measurement ---------- 63
15 Exploded View and Replacement Parts List ---------- 69
15.1. Cabinet Parts Location 1 ---------- 69
15.2. Cabinet Parts Location 2 ---------- 70
15.3. Cabinet Parts Location 3 ---------- 71
15.4. Packaging ---------- 72
15.5. Mechanical Replacement Part List ---------- 73
15.6. Electrical Replacement Part List ---------- 75

1 Safety Precautions

1.1. General Guidelines

1. **IMPORTANT SAFETY NOTICE**

   There are special components used in this equipment which are important for safety. These parts are marked by ⚠ in the Schematic Diagrams, Circuit Board Layout, Exploded Views and Replacement Parts List. It is essential that these critical parts should be replaced with manufacturer's specified parts to prevent X-RADIATION, shock, fire, or other hazards. Do not modify the original design without permission of manufacturer.

2. An Isolation Transformer should always be used during the servicing of AC Adaptor whose chassis is not isolated from the AC power line. Use a transformer of adequate power rating as this protects the technician from accidents resulting in personal injury from electrical shocks. It will also protect AC Adaptor from being damaged by accidental shorting that may occur during servicing.
3. When servicing, observe the original lead dress. If a short circuit is found, replace all parts which have been overheated or damaged by the short circuit.
4. After servicing, see to it that all the protective devices such as insulation barriers, insulation papers shields are properly installed.
5. After servicing, make the following leakage current checks to prevent the customer from being exposed to shock hazards.

1.1.1. Leakage Current Cold Check

1. Unplug the AC cord and connect a jumper between the two prongs on the plug.
2. Measure the resistance value, with an ohmmeter, between the jumpered AC plug and each exposed metallic cabinet part on the equipment such as screwheads, connectors, control shafts, etc. When the exposed metallic part has a return path to the chassis, the reading should be between 1MΩ and 5.2MΩ.

   When the exposed metal does not have a return path to the chassis, the reading must be ∞

1.1.2. Leakage Current Hot Check

1. Plug the AC cord directly into the AC outlet. Do not use an isolation transformer for this check.
2. Connect a 1.5kΩ, 10 watts resistor, in parallel with a 0.15μF capacitors, between each exposed metallic part on the set and a good earth ground such as a water pipe, as shown in Figure 1-1.
3. Use an AC voltmeter, with 1000 ohms/volt or more sensitivity, to measure the potential across the resistor.
4. Check each exposed metallic part, and measure the voltage at each point.
5. Reverse the AC plug in the AC outlet and repeat each of the above measurements.
6. The potential at any point should not exceed 0.75 volts RMS. A leakage current tester (Simpson Model 229 or equivalent) may be used to make the hot checks, leakage current must not exceed 1/2 milliamp. In case a measurement is outside of the limits specified, there is a possibility of a shock hazard, and the equipment should be repaired and rechecked before it is returned to the customer.

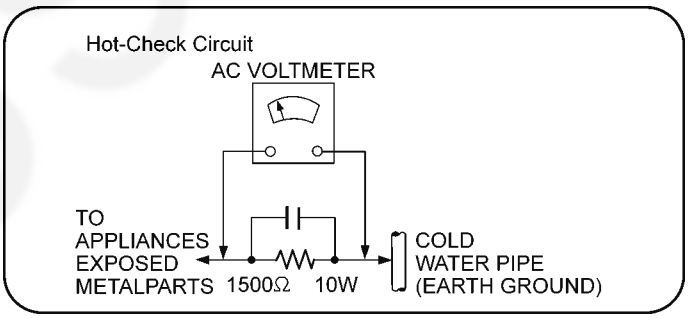

Figure 1-1

1.2. Before Repair and Adjustment

Disconnect AC power to discharge AC capacitor (in SMPS P.C.B.) as indicate below diagram through a 10 Ω, 10 W resistor to ground.

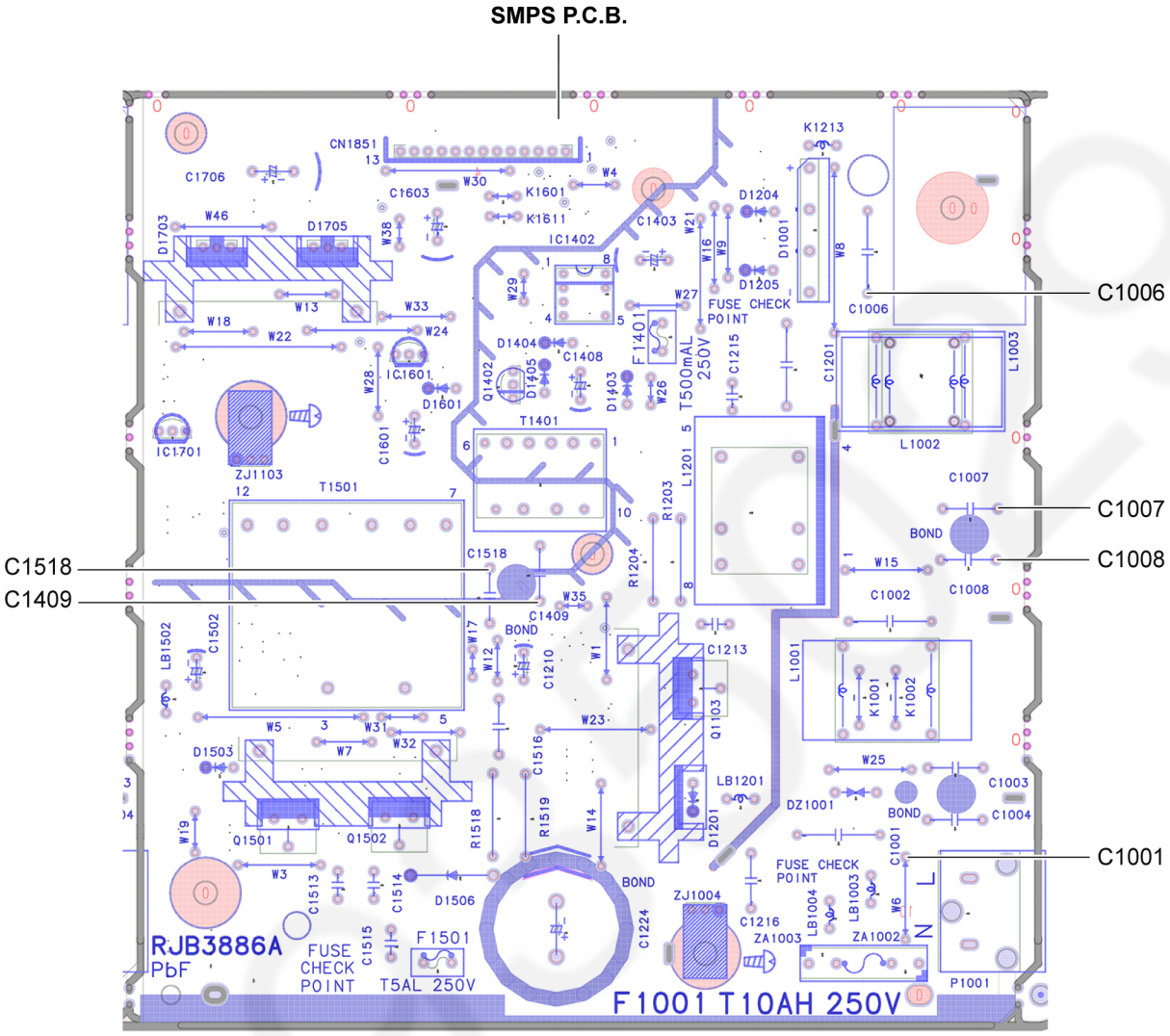

Figure 1-2

Caution:

DO NOT SHORT-CIRCUIT DIRECTLY (with a screwdriver blade, for instance), as this may destroy solid state devices.
After repairs are completed, restore power gradually using a variac, to avoid overcurrent.
Current consumption at AC 120 V, 60 Hz in FM Tuner at volume minimum should be ~ 500mA (PN).
Current consumption at AC 220~240 V, 50/60 Hz in FM Tuner at volume minimum should be ~ 500mA (PS).

1.3. Protection Circuitry

The protection circuitry may have operated if either of the following conditions are noticed:

- No sound is heard when the power is turned on.
- Sound stops during a performance.

The function of this circuitry is to prevent circuitry damage if, for example, the positive and negative speaker connection wires are “shorted”, or if speaker systems with an impedance less than the indicated rated impedance of the amplifier are used.
If this occurs, follow the procedure outlines below:

1. Turn off the power.
2. Determine the cause of the problem and correct it.
3. Turn on the power once again after one minute.

Note:

When the protection circuitry functions, the unit will not operate unless the power is first turned off and then on again.

1.4. Safety Parts Information

Safety Parts List:

There are special components used in this equipment which are important for safety.

These parts are marked by ⚠ in the Schematic Diagrams, Exploded View & Replacement Parts List. It is essential that these critical parts should be replaced with manufacturer's specified parts to prevent shock, fire or other hazards. Do not modify the original design without permission of manufacturer.

Safety	Ref No.	Part No.	Part Name & Description	Remarks
⚠	14	RGR0484E-A	REAR PANEL	PN
⚠	14	RGR0484E-C	REAR PANEL	PS
⚠	19	RKM0771-K	TOP CABINET	
⚠	301	RAE1052Z-V	TRAVERSE ASS'Y	(E.S.D)
⚠	A1	K2CB2CB00022	AC CORD	PN
⚠	A1	K2CQ2YY00119	AC CORD	PS
⚠	A3	RQT0A63-1B	O/I BOOK (En)	
⚠	A3	RQT0A64-1M	O/I BOOK (Sp)	
⚠	PCB7	REP5304E	SMPS P.C.B	(RTL)
⚠	L1002	G0B502J00005	LINE FILTER	
⚠	T1401	G4DYA0000592	SWITCHING TRANSFORMER	
⚠	T1501	G4DYA0000778	SWITCHING TRANSFORMER	
⚠	F1001	K5D103BNA005	FUSE	
⚠	F1401	K5G501YA0081	FUSE	
⚠	F1501	K5G502Y00006	FUSE	
⚠	P1001	K2AA2B000011	AC INLET	PS
⚠	P1001	K2AB2B000007	AC INLET	PN
⚠	C1001	F0CAF104A105	0.1uF	
⚠	C1006	F0CAF224A105	0.22uF	
⚠	C1007	F1BAF471A215	470pF	
⚠	C1008	F1BAF471A215	470pF	
⚠	C1409	F1BAF471A215	470pF	
⚠	C1518	F1BAF471A215	470pF	
⚠	Q1403	B3PBA0000579	TRANSISTOR	
⚠	Q1404	B3PBA0000579	TRANSISTOR	
⚠	Q1405	B3PBA0000579	TRANSISTOR	
⚠	Q1505	B3PBA0000579	TRANSISTOR	
⚠	Q1701	B3PBA0000579	TRANSISTOR	
⚠	DZ1001	D4EAY511A127	VARISTOR	
⚠	R1001	D0GF105JA048	1M 1/4W	
⚠	R1002	D0GF105JA048	1M 1/4W	
⚠	R1003	D0GF105JA048	1M 1/4W	

2 Warning

2.1. Prevention of Electrostatic Discharge (ESD) to Electrostatically Sensitive (ES) Devices

Some semiconductor (solid state) devices can be damaged easily by static electricity. Such components commonly are called Electrostatically Sensitive (ES) Devices.

Examples of typical ES devices are IC (integrated circuits) and some field-effect transistors and semiconductor "chip" components.

The following techniques should be used to help reduce the incidence of component damage caused by electrostatic discharge (ESD).

1. Immediately before handling any semiconductor component or semiconductor-equipped assembly, drain off any ESD on your body by touching a known earth ground. Alternatively, obtain and wear a commercially available discharging ESD wrist strap, which should be removed for potential shock reasons prior to applying power to the unit under test.
2. After removing an electrical assembly equipped with ES devices, place the assembly on a conductive surface such as aluminum foil, to prevent electrostatic charge buildup or exposure of the assembly.
3. Use only a grounded-tip soldering iron to solder or unsolder ES devices.
4. Use only an anti-static solder removal device. Some solder removal devices not classified as “anti-static (ESD protected)” can generate electrical charge sufficient to damage ES devices.
5. Do not use freon-propelled chemicals. These can generate electrical charges sufficient to damage ES devices.
6. Do not remove a replacement ES device from its protective package until immediately before you are ready to install it. (Most replacement ES devices are packaged with leads electrically shorted together by conductive foam, aluminum foil or comparable conductive material).
7. Immediately before removing the protective material from the leads of a replacement ES device, touch the protective material to the chassis or circuit assembly into which the device will be installed.
   CAUTION:
   Be sure no power is applied to the chassis or circuit, and observe all other safety precautions.
8. Minimize bodily motions when handling unpackaged replacement ES devices. (Otherwise harmless motion such as the brushing together of your clothes fabric or the lifting of your foot from a carpeted floor can generate static electricity (ESD) sufficient to damage an ES device).

IMPORTANT SAFETY NOTICE

There are special components used in this equipment which are important for safety. These parts are marked by ⚠ in the Schematic Diagrams, Circuit Board Diagrams, Exploded Views and Replacement Parts List. It is essential that these critical parts should be replaced with manufacturer's specified parts to prevent shock, fire or other hazards. Do not modify the original design without permission of manufacturer.

2.2. Precaution of Laser Diode

CAUTION:
THIS PRODUCT UTILIZES A LASER.
USE OF CONTROLS OR ADJUSTMENTS OR PERFORMANCE OF PROCEDURES OTHER THAN THOSE SPECIFIED HEREIN MAY RESULT IN HAZARDOUS RADIATION EXPOSURE.

Caution:

This product utilizes a laser diode with the unit turned “on”, invisible laser radiation is emitted from the pickup lens.
Wavelength: 790 nm (CD)
Maximum output radiation power from pickup: 100 μW/VDE
Laser radiation from the pickup unit is safety level, but be sure the followings:

1. Do not disassemble the pickup unit, since radiation from exposed laser diode is dangerous.
2. Do not adjust the variable resistor on the pickup unit. It was already adjusted.
3. Do not look at the focus lens using optical instruments.
4. Recommend not to look at pickup lens for a long time.

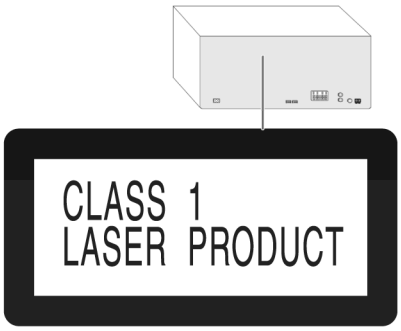

Figure 2-1

2.3. General description about Lead Free Solder (PbF)

The lead free solder has been used in the mounting process of all electrical components on the printed circuit boards used for this equipment in considering the globally environmental conservation.

The normal solder is the alloy of tin (Sn) and lead (Pb). On the other hand, the lead free solder is the alloy mainly consists of tin (Sn), silver (Ag) and Copper (Cu), and the melting point of the lead free solder is higher approx.30 degrees C (86°F) more than that of the normal solder.

Definition of PCB Lead Free Solder being used

The letter of “PbF” is printed either foil side or components side on the PCB using the lead free solder. (See right figure)	PbF

Service caution for repair work using Lead Free Solder (PbF)

- The lead free solder has to be used when repairing the equipment for which the lead free solder is used.
  (Definition: The letter of “PbF” is printed on the PCB using the lead free solder.)
- To put lead free solder, it should be well molten and mixed with the original lead free solder.
- Remove the remaining lead free solder on the PCB cleanly for soldering of the new IC.
- Since the melting point of the lead free solder is higher than that of the normal lead solder, it takes the longer time to melt the lead free solder.
- Use the soldering iron (more than 70W) equipped with the temperature control after setting the temperature at 350±30 degrees C (662±86°F).

Recommended Lead Free Solder (Service Parts Route.)

- The following 3 types of lead free solder are available through the service parts route.
  RFKZ03D01K----------(0.3mm 100g Reel)
  RFKZ06D01K----------(0.6mm 100g Reel)
  RFKZ10D01K----------(1.0mm 100g Reel)

Note

* Ingredient: tin (Sn), 96.5%, silver (Ag) 3.0%, Copper (Cu) 0.5%, Cobalt (Co) / Germanium (Ge) 0.1 to 0.3%

2.4. Handling Precautions for Traverse Ass’y

The laser diode in the optical pickup unit may break down due to static electricity of clothes or human body. Special care must be taken avoid caution to electrostatic breakdown when servicing and handling the laser diode in the traverse unit.

2.4.1. Cautions to Be Taken in Handling the Optical Pickup Unit (OPU)

The laser diode in the optical pickup unit may be damaged due to electrostatic discharge generating from clothes or human body. Special care must be taken avoid caution to electrostatic discharge damage when servicing the laser diode.

1. Do not give a considerable shock to the optical pickup unit as it has an extremely high-precise structure.
2. To prevent the laser diode from the electrostatic discharge damage, the flexible cable of the optical pickup unit removed should be short-circuited with a short pin or a clip.
3. The flexible cable may be cut off if an excessive force is applied to it. Use caution when handling the flexible cable.
4. The antistatic FFC is connected to the new optical pickup unit. After replacing the optical pickup unit and connecting the flexi-

ble cable, cut off the antistatic FFC.

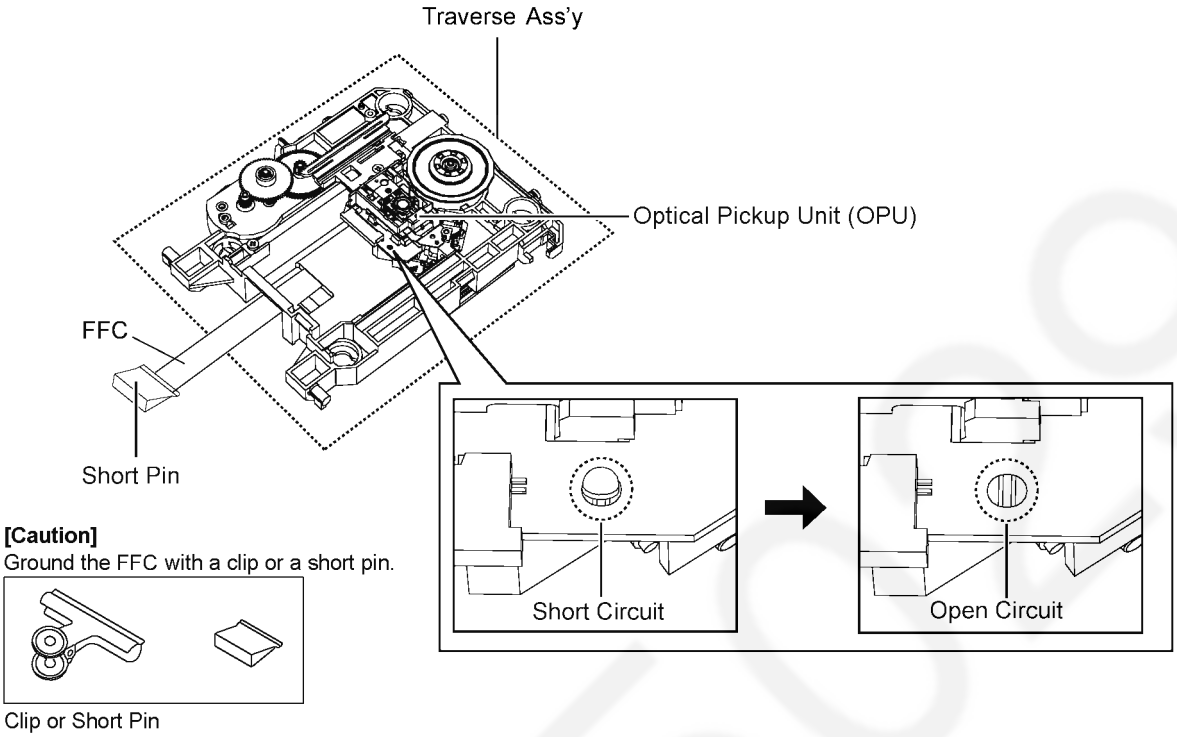

Figure 2-2

2.5. Grounding for electrostatic breakdown prevention

- As for parts that use optical pick-up (laser diode), the optical pick-up is destroyed by the static electricity of the working environment.
  Repair in the working environment that is grounded.

2.5.1. Worktable grounding

- Put a conductive material (sheet) or iron sheet on the area where the optical pickup is placed and ground the sheet.

2.5.2. Human body grounding

- Use the anti-static wrist strap to discharge the static electricity form your body Figure 2-3.

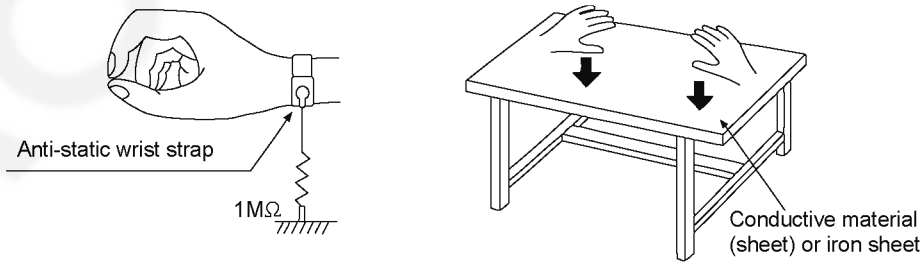

Figure 2-3

3 Service Navigation

3.1. Service Information

This service manual contains technical information which will allow service personnel's to understand and service this model. Please place orders using the parts list and not the drawing reference numbers.

If the circuit is changed or modified, this information will be followed by supplement service manual to be filed with original service manual.

3.2. Software Update Procedure

UPDATE PROCEDURE

Perform the following steps.
- Step 1: Preparing the USB device
- Step 2: Software Update

Step 1: Preparing the USB device

Before start creating the update USB, it is nessesary to check the update file.
It is important to use the correct file otherwise USB version up process will not working.

Note: Please do not rename the file as the updation process will look for above naming. If different name, version up process will not work.

To create USB update, copy the desired FRM file (depends on model) into USB.
Please make sure there is no other file inside the USB device.

Step 2: Software Update

<Caution>
► During the update process, do not disconnect the AC power supply cord.
► Do not press any buttons, except as instructed. Failure to do so may result in the set becoming unresponsive which will require repair.

Step:
► Set need to be turn ON in order to support USB update process.
► Go to USB selector until the display show "NODEVICE".
1. Insert USB device (With FRM file inside)
2. During the update process, the below message will shown on the display.

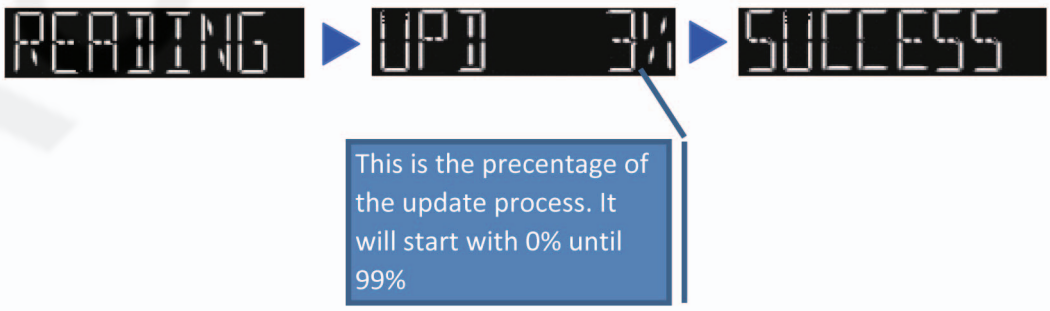

3. When "SUCCESS" display appear, unplug USB then ac out supply. Firmware updation process completed.

4 Specifications

■ **Amplifier section**

RMS output power stereo mode

High Ch	350 W per channel (3 Ω), 1 kHz, 30% THD
Mid Ch	350 W per channel (3 Ω), 1 kHz, 30% THD
Low Ch	500 W per channel (2 Ω), 100 Hz, 30% THD
Total RMS stereo mode power	2400 W

■ **Disc section**

Disc played (8 cm or 12 cm)

CD, CD-R/RW (CD-DA, MP3*)

*MPEG-1 Layer 3, MPEG-2 Layer 3

Pick up

Wavelength	790 nm(CD)

■ **Buetooth® section**

Version	Bluetooth® 2.1 + EDR
Class	Class 2
Supported profiles	A2DP, AVRCP, SPP, OPP, FTP
Operating frequency	2.4 GHz band FH-SS
Operation distance	10 m line of sight

■ **Internal memory section**

Memory

Memory size	4 GB
Media file format support	MP3 (*.mp3)

Memory recording

Bit rate	128 kbps
Memory recording speed	1x, 3x max (CD only)
Recording file format	MP3 (*.mp3)

■ **Tuner section**

Frequency modulation (FM)

Preset memory	30 stations
Frequency range	87.5 MHz to 108.0 MHz (100 kHz step) (For PN) 87.9 MHz to 107.9 MHz (200 kHz step) (For PN) 87.50 MHz to 108.00 MHz (50 kHz step) (For PS)
Antenna terminals	75 Ω (unbalanced)

Amplitude modulation (AM)

Preset memory	15 stations
Frequency range	520 kHz to 1710 kHz (10 kHz step) (For PN) 522 kHz to 1629 kHz (9 kHz step) (For PS) 520 kHz to 1630 kHz (10 kHz step) (For PS)

■ **Terminal section**

USB port

USB standard	USB 2.0 full speed
Media file format support	MP3 (*.mp3)
USB device file system	FAT12, FAT16, FAT32

USB recording

Bit rate	128 kbps
USB recording speed	1x, 3x (CD only)
Recording file format	MP3 (*.mp3)

AUX IN 1

Audio input	Pin jack

AUX IN 2

Terminal	Stereo, 3.5 mm jack

Microphone

Terminal	Mono, 6.3 mm jack

■ **General**

Power supply	AC 120 V, 60 Hz (for PN) AC 220 V to 240 V, 50/60 Hz (for PS)
Power consumption	155 W
Dimensions (W x H x D)	460 mm x 234 mm x 409 mm
Mass	5.8 kg
Operating temperature range	0 °C to +40 °C
Operating humidity range	35% to 80% RH (no condensation)
Power consumption in standby mode (approximate)	0.4 W
Power consumption in standby mode (approximate) (With “BLUETOOTH STANDBY” set to “ON”)	0.5 W

Note:

1. Specifications are subject to change without notice. Mass and dimension are approximate.
2. Total harmonic distortion is measured by the digital spectrum analyzer.

■ System: SC-MAX5000PN

Main Unit: SA-MAX5000PN
Speaker System: SB-MAX5000PN

■ System: SC-MAX5000PS

Main Unit: SA-MAX5000PS
Speaker System: SB-MAX5000PS

5 Location of Controls and Components

5.1. Remote Control Key Button Operation

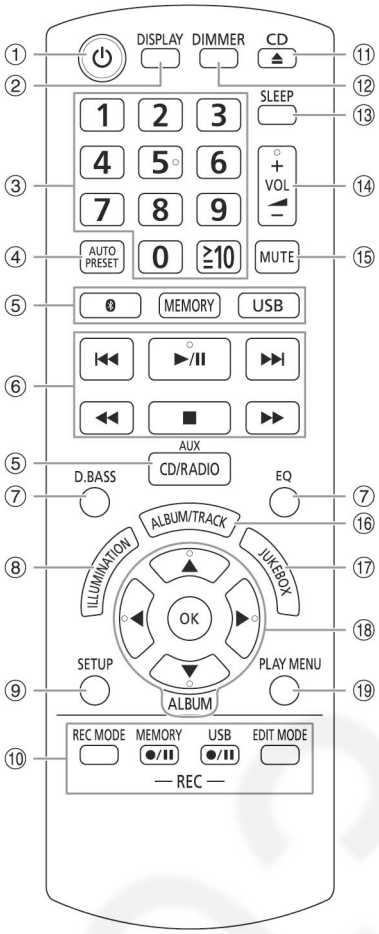

① **Standby/on switch [⏻], [⏻/I]**
Press to switch the unit from on to standby mode or vice versa. In standby mode, the unit is still consuming a small amount of power.

② View the content information

③ **Numeric buttons**
To select a 2-digit number
Example: 16: [≧10]→[1]→[6]

④ Auto preset the radio station

⑤ **Select the audio source**
On the main unit:
To start Bluetooth® pairing, press and hold [–PAIRING].

⑥ Basic playback control

⑦ Select the sound effects

⑧ Select the illumination effects

⑨ View the setup menu

⑩ Recording operation control

⑪ Open or close the disc tray

⑫ **Decrease the brightness of the display panel**
To cancel, press the button again.

⑬ Set the sleep timer

⑭ Adjust the volume level

⑮ **Mute the sound**
To cancel, press the button again.
"MUTE" is also canceled when you adjust the volume or when you switch off the system.

⑯ Select MP3 album or track

⑰ Select DJ jukebox

⑱ Select or confirm the option

⑲ View the play menu

5.2. Main Unit Key Button Operation

Top View

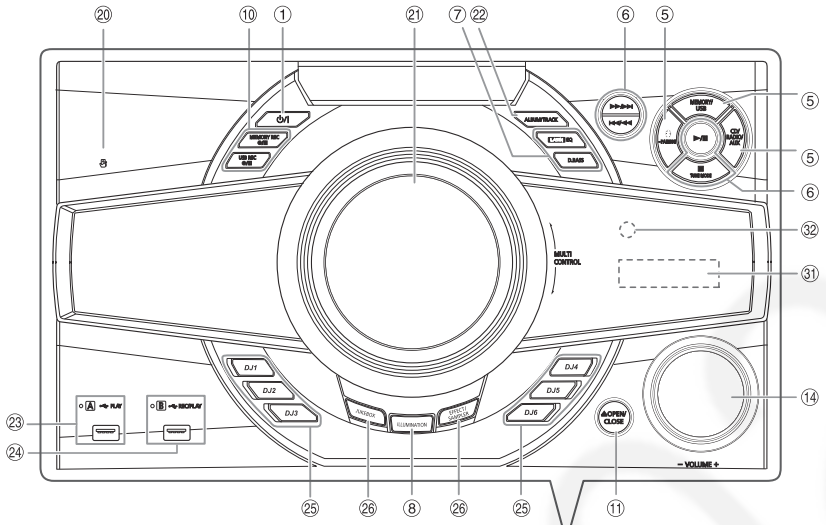

Front View

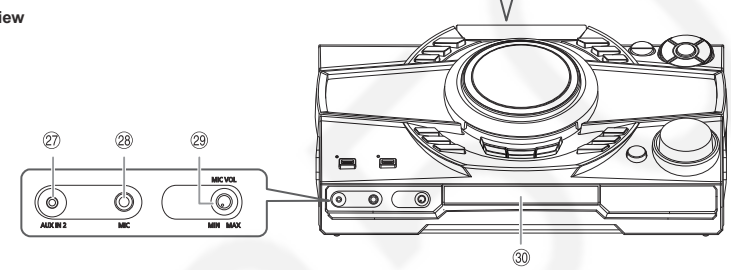

① **Standby/on switch [⏻], [⏻/I]**
Press to switch the unit from on to standby mode or vice versa. In standby mode, the unit is still consuming a small amount of power.

⑤ **Select the audio source**
On the main unit:
To start Bluetooth® pairing, press and hold [–PAIRING].

⑥ Basic playback control

⑦ Select the sound effects

⑧ Select the illumination effects

⑩ Recording operation control

⑪ Open or close the disc tray

⑭ Adjust the volume level

⑳ NFC touch area

㉑ Turntable for DJ and multi control

㉒ **Select MP3 album or track**
Press [ALBUM/TRACK] to select album or track.
Browse tracks or albums
Turn [MULTI CONTROL] to browse.
To start playback from the selection, press [▶/❚❚].

㉓ **USB A**
USB port ( )
USB status indicator
Play MP3 tracks.

㉔ **USB B**
USB port ( )
USB status indicator
Play MP3 tracks.
Record sound or music tracks.

㉕ **DJ function direct buttons**
Press [DJ JUKEBOX] or [EFFECT/SAMPLER] to switch on the DJ function.
Press [DJ1] to [DJ6] on the main unit to select the desired function.
To cancel, press the selected [DJ1] to [DJ6] again.

㉖ **Switch on the DJ function**
To cancel, press the button again.

㉗ AUX IN 2 jack

㉘ Microphone jack

㉙ Adjust the microphone volume level

㉚ Disc tray

㉛ Display panel

㉜ **Remote control sensor**
Distance: Within approximately 7 m
Angle: Approximately 20° up and down,
30° left and right

6 Service Mode

6.1. Cold-Start

Item		FL Display	Key Operation
Mode Name	Description		Front Key
Cold Start	To carry out cold-start or initialize to shipping mode	_ _ _ _ _ _ _ _	1. Unplug AC power cord. 2. Press & hold [POWER] button. 3. Plug in AC power cord while [POWER] button being pressed. 4. Release [POWER] button.

6.2. Sales Demonstration Lock Function

Item		FL Display	Key Operation
Mode Name	Description		Front Key
Entering into Sales Demonstration Lock Mode	To enter into the sales demonstration lock mode.	-- --LOCK-- --	1. Turn on the unit. 2. Select to any mode function. 3. Press and hold [⏏OPEN/CLOSE] and [CD/RADIO/AUX] keys for 5 sec or more. The display will show upon entering into this mode for 2 sec. Note: [⏏OPEN/CLOSE] button is invalid and the main unit displays "LOCKED" while the lock function mode is entered.
Cancellation of Sales Demonstration Lock Mode	To cancel the sales demonstration lock mode.	--UNLOCK--	1. Turn on the unit. 2. Select to CD mode function. 3. Set volume to Vol 19. 4. Press and hold [⏏OPEN/CLOSE] and [CD/RADIO/AUX] keys for 5 sec or more. The display will show upon entering into this mode for 2 sec.

6.3. Doctor Mode Table

6.3.1. Doctor Mode Table 1

Item		FL Display	Key Operation
Mode Name	Description		Front Key
Doctor Mode	To enter into Doctor Mode	NO DISC	In CD Mode: 1. Press [■] button on main unit follow by [4] and [7] on remote control. 2. To exit, press [⏻/I] on main unit or remote control
EEPROM checksum check	Displaying of 1. Year Develop. 2. Model Type. 3. ROM Type. 4. Firmware Version.	(Display 1) E 1 0 3 . 1 1 1 ① ② ③ ④ (Decimal)	In CD mode: 1. Enter into Doctor Mode
Cold Start	To active cold start upon next AC power up when reset start is execute the next time.	-- -- -- -- -- -- -- --	In Doctor Mode: 1. Press [4] button on the remote control.

6.3.2. Doctor Mode Table 2

Item		FL Display	Key Operation
Mode Name	Description		Front Key
Volume Setting Check	To check the volume setting of the main unit.	VOL 3 Volume Press [7]: VOL50 Press [8]: VOL35 Press [9]: VOL0	In Doctor Mode: 1. Press [7], [8], [9] button on the remote control.
FL Display Check	To check the FL segment display. All segments will light up while all LED blink at 0.5s intervals.		In Doctor mode: 1. Press [1] button on the remote control. 2. To cancel this mode, press [0] button on the remote control.
Traverse Test	To determine the traverse unit operation for inner & outer access track. In this mode, ensure the CD is in the main unit.	00000000 The counter will increment by one. When reach 99999999 will change to 00000000 Cancellation Display CANCEL	In Doctor Mode: 1. Press [10]→[1]→[2] button on the remote control. 2. To cancel this mode, press [0] button on the remote control.
Reliability Test (Combination)	To determine the traverse unit operation & open/close operation of the mechanism. In this mode, ensure the CD is in the main unit.	00000000 The counter will increment by one. When reach 99999999 will change to 00000000 Cancellation Display CANCEL	In Doctor Mode: 1. Press [10]→[1]→[5] button on the remote control. 2. To cancel this mode, press [0] button on the remote control.
Loading Test	To determine the open & close operation of the CD Mechanism Unit. In this mode, the tray will open & close automatically.	00000000 The counter will increment by one. When reach 99999999 will change to 00000000 Cancellation Display CANCEL	In Doctor Mode: 1. Press [10]→[2]→[1] button on the remote control. 2. To cancel this mode, press [0] button on the remote control.

6.4. Self-Diagnostic Mode

Item		FL Display	Key Operation
Mode Name	Description		Front Key
Self Diagnostic Mode	To enter into self diagnostic checking	SERVICE	Step 1: Select CD mode (Ensure no disc is inserted). Step 2: Press & hold [■] button follow by [▶▶/▶▶I] on main unit for 2 seconds.
Error Code Information	System will perform a check on any unusual/error code from the memory	Example: F61	Step 1: In self diagnostic mode, Press [■] on main unit. To exit, press [⏻/I] on main unit or remote control.
Delete error code	To clear the stored in memory (EEPROM IC)	CLEAR	Step 1: In self diagnostic mode, Press [OK] on remote control for 5 seconds. To exit, press [⏻/I] on main unit or remote control.

6.5. Self-Diagnostic Error Code Table

Self-Diagnostic Function (Refer Section 6.4. Self-Diagnostic Mode) provides information on any problems occurring for the unit and its respective components by displaying the error codes. These error code such as U**, H** and F** are stored in memory and held unless it is cleared.
The error code is automatically display after entering into self-diagnostic mode.

6.5.1. Power Supply Error Code Table

Item		FL Display	Key Operation	Solution (PCB exchange repair)
Mode Name	Description		Front Key	
Error Code F61	Diagnosis Contents: Power Amp IC output abnormal. Upon power on, PCONT=HIGH, DC_DET_AMP after checking LSI.	F61	Press [■] on main unit for next error.	Check following: 1. Fan Unit 2. SMPS P.C.B. 3. Speaker Connection
Error Code F76	Diagnosis Contents: Power Amp IC output abnormal. DC_DET_PWR.	F76	Press [■] on main unit for next error.	Check supply voltages on Main P.C.B.
Error Code F61-76	Diagnosis Contents: Power Amp IC output abnormal. Both DCDET (NG).	F61-F76	Press [■] on main unit for next error.	–

6.5.2. CD Mechanism Error Code Table

Item		FL Display	Key Operation	Solution (PCB exchange repair)
Mode Name	Description		Front Key	
Error Code CD H15	Diagnosis Contents: CD Open Abnormal. During operation POS_SW_R On fail to be detected within 4 sec. Error No. shall be clear by force or during cold start.	CD H15	Press [■] on main unit for next error.	Check following: 1. CD Interface P.C.B. (Pin 3, 4, 6) 2. SOC IC (IC1001)
Error Code CD H16	Diagnosis Contents: CD Closing Abnormal. During operation POS_SW_CEN On fail to be detected within 4 sec. Error No. shall be clear by force or during cold start.	CD H16	Press [■] on main unit for next error.	Check following: 1. CD Interface P.C.B. (Pin 6, 3, 4) 2. SOC IC (IC1001)
Error Code F26	Diagnosis Contents: Communication between CD servo LSI and micro-p abnormal. During switch to CD func-tion, if SENSE = “L” within fail safe time of 20ms.	F26	Press [■] on main unit for next error.	Check following: 1. SOC IC (IC1001)

6.5.3. Bluetooth Error Code Table

Item		FL Display	Key Operation	Solution (PCB exchange repair)
Mode Name	Description		Front Key	
Error Code F703	Diagnosis Contents: Bluetooth Communication. Communication between Bluetooth module and micro-p abnormal.	F703	Press [■] on main unit for next error.	Check following: 1. Bluetooth P.C.B. 2. SOC IC on Main P.C.B.
Error Code F77	Diagnosis Contents: Bluetooth Address Error If there is no valid Bluetooth address stored in the EEPROM IC.	F77	Press [■] on main unit for next error.	Check following: 1. EEPROM IC (IC1004) on Main P.C.B.

7 Troubleshooting Guide

7.1. No Power or No Display

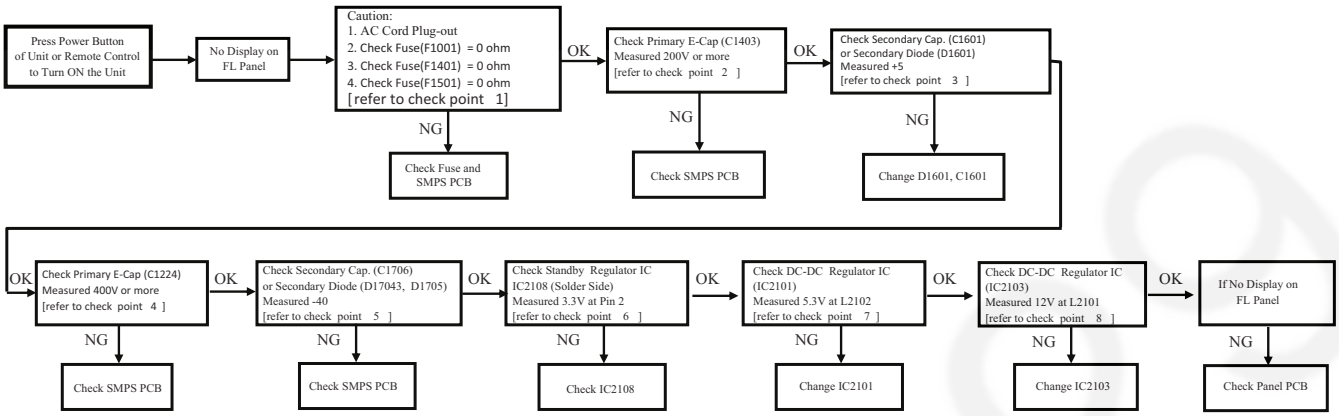

7.2. Bluetooth® Pairing Failure

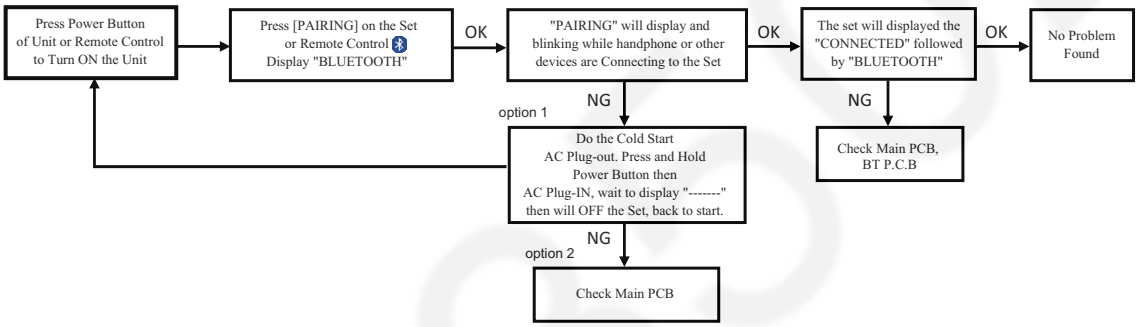

7.3. No Key Function

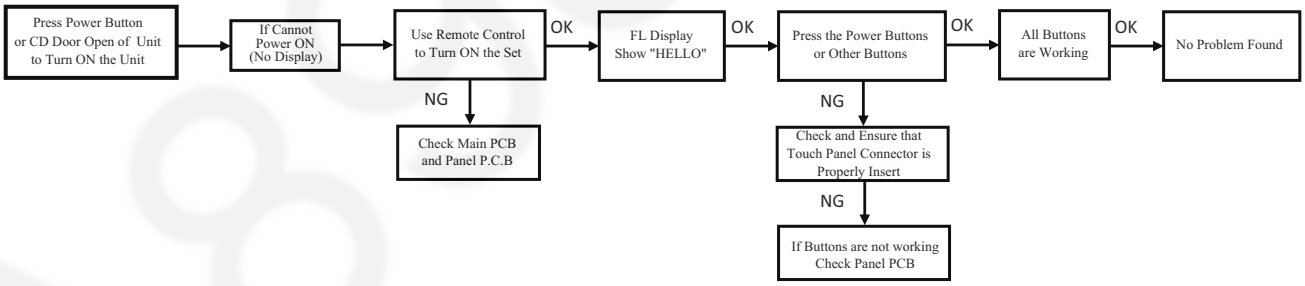

7.4. No Remote Control Function

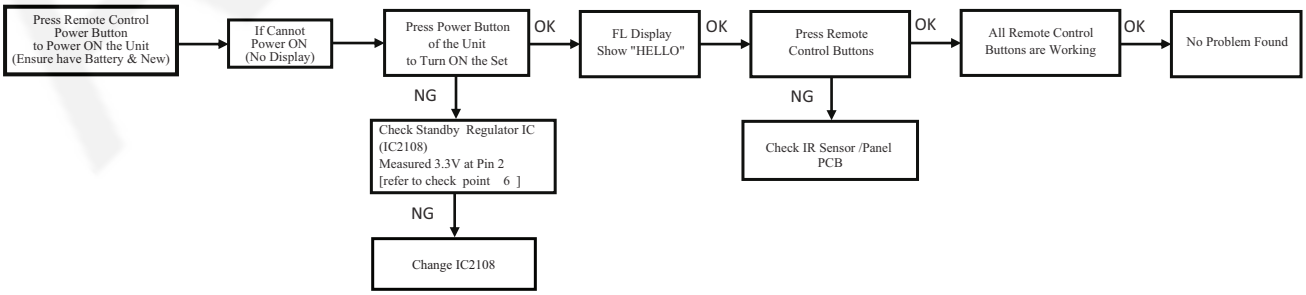

7.5. No NFC

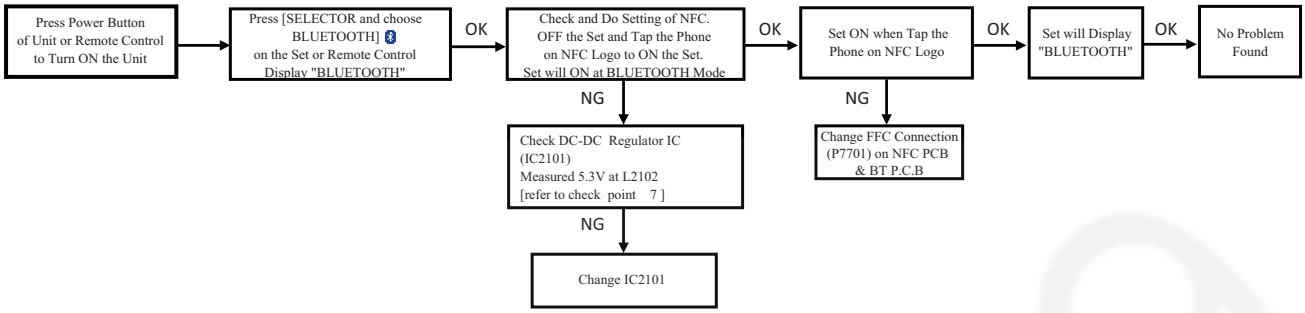

7.6. USB Device Cannot Detect

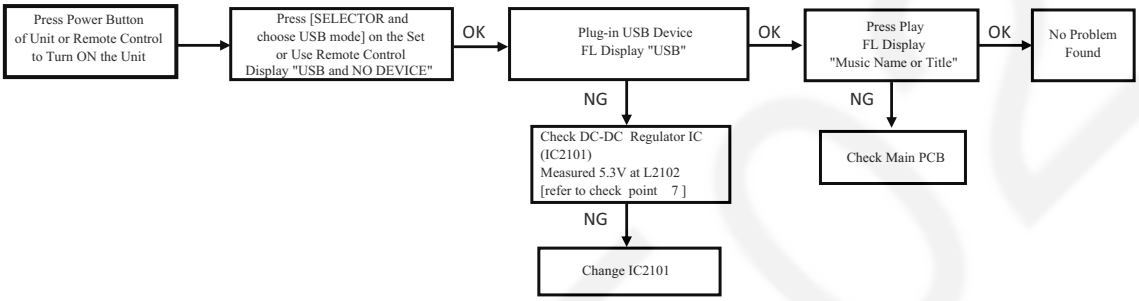

A8935029

7.7. No Output Sound

CD Play

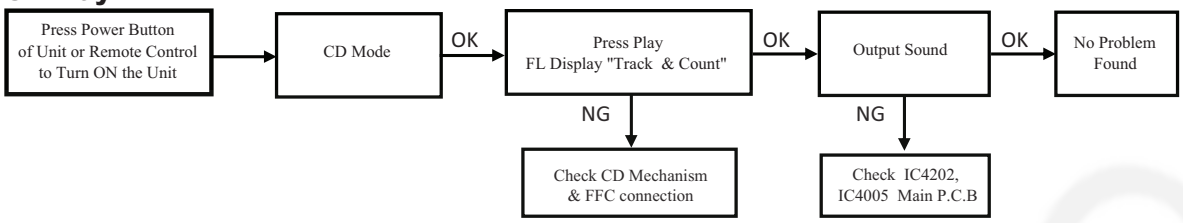

USB Play

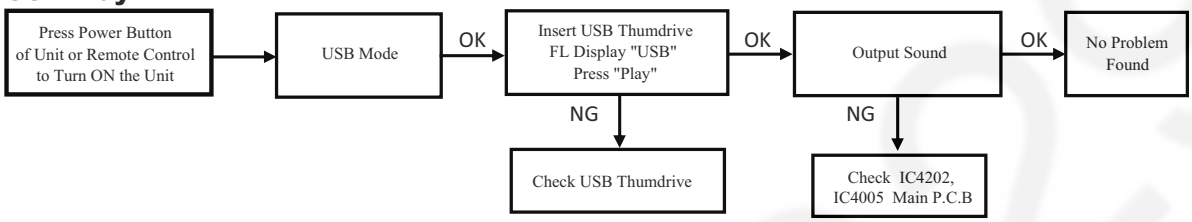

Bluetooth Play

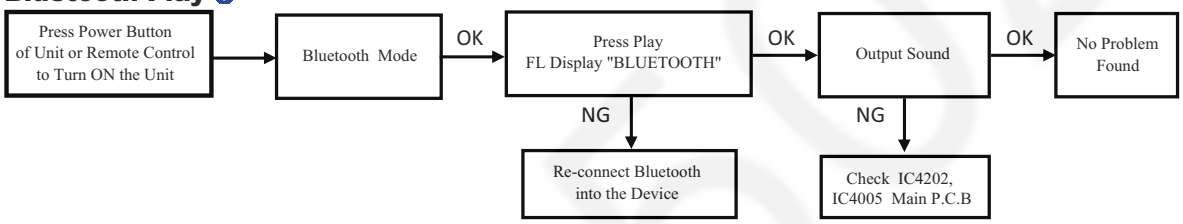

Tuner Mode

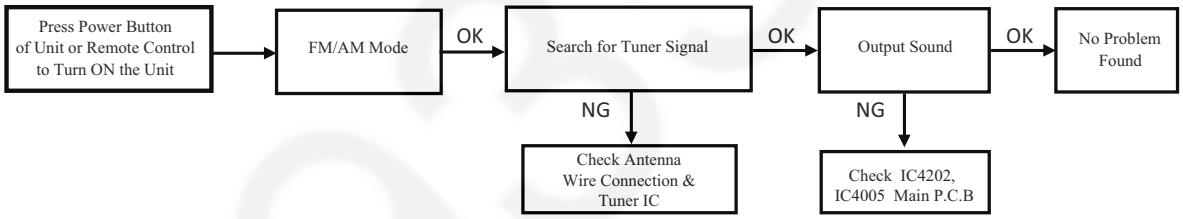

7.8. Check Point

7.8.1. SMPS P.C.B.

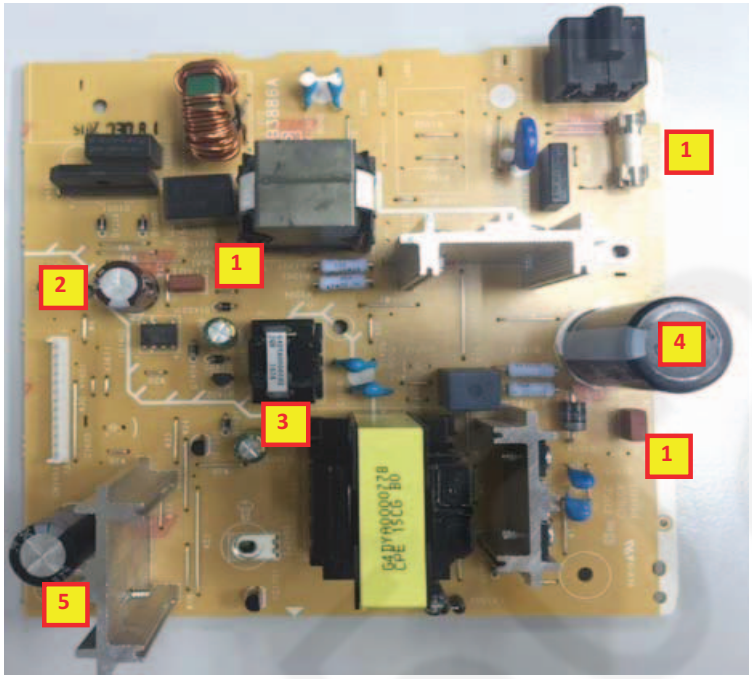

7.8.2. Main P.C.B.

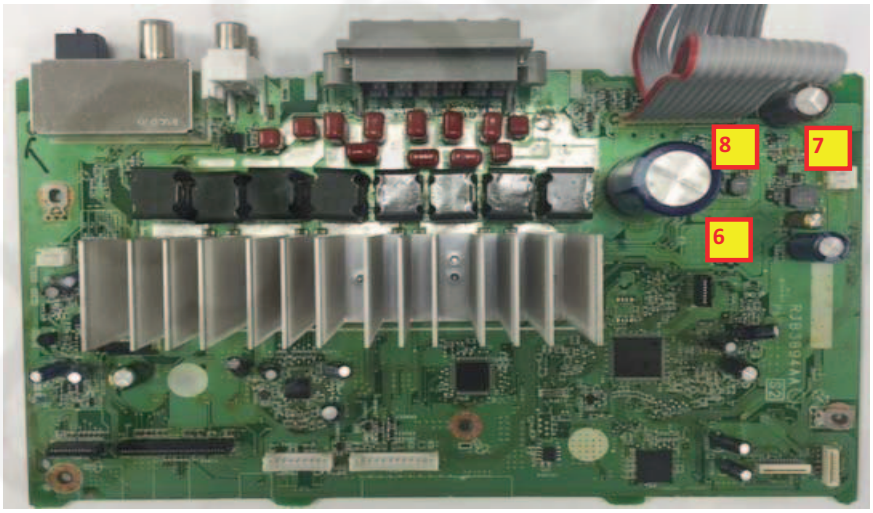

8 Disassembly and Assembly Instructions

- **This section describes the disassembly and/or assembly procedures for all major printed circuit boards & main components for the unit. (You may refer to the section of "Main components and P.C.B Locations" as described in this service manual)**
- **Before carrying out the disassembly process, please ensure all the safety precautions & procedures are followed.**
- **During the disassembly and/or assembly process, please handle with care as there may be chassis components with sharp edges.**
- **Avoid touching heatsinks due to its high temperature after prolong use.**
- **Be sure to use proper service tools, equipments or jigs during repair.**
- **Select items from the following indexes when disassembly or replacement are required.**
- Disassembly of Top Cabinet
- Disassembly of Front Panel Unit
- Disassembly of Panel P.C.B.
- Disassembly of NFC P.C.B.
- Disassembly of USB P.C.B.
- Disassembly of Mic P.C.B.
- Disassembly of SMPS P.C.B.
- Disassembly of Main P.C.B.
- Disassembly of CD Mechanism Unit
- Disassembly of CD Interface P.C.B.

8.1. Type of Screws

CAUTION NOTE:
Please use original screw and at correct locations.

Below shown is part no. of different screw types used:

- a :RHD30119-S
- b :RHD30007-K2J
- c :RHD26046-L
- d :RHD26016-1L
- e :RHD30111-31
- f :RHDX031008
- g :XTN2+6GFJ

A89350029

8.2. Disassembly Flow Chart

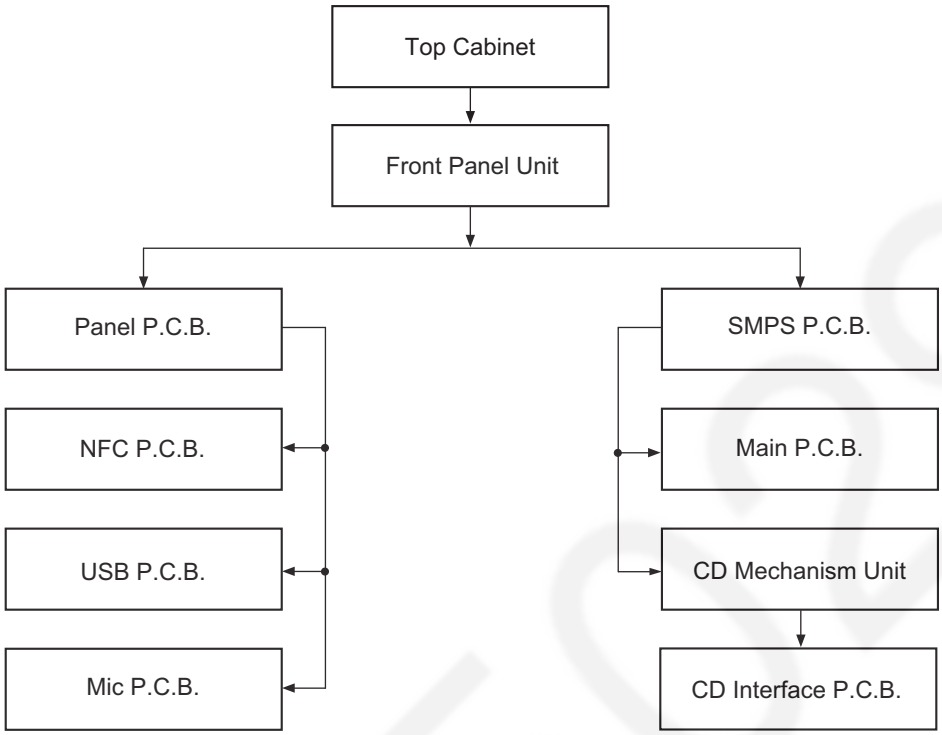

8.3. Main Components and P.C.B. Locations

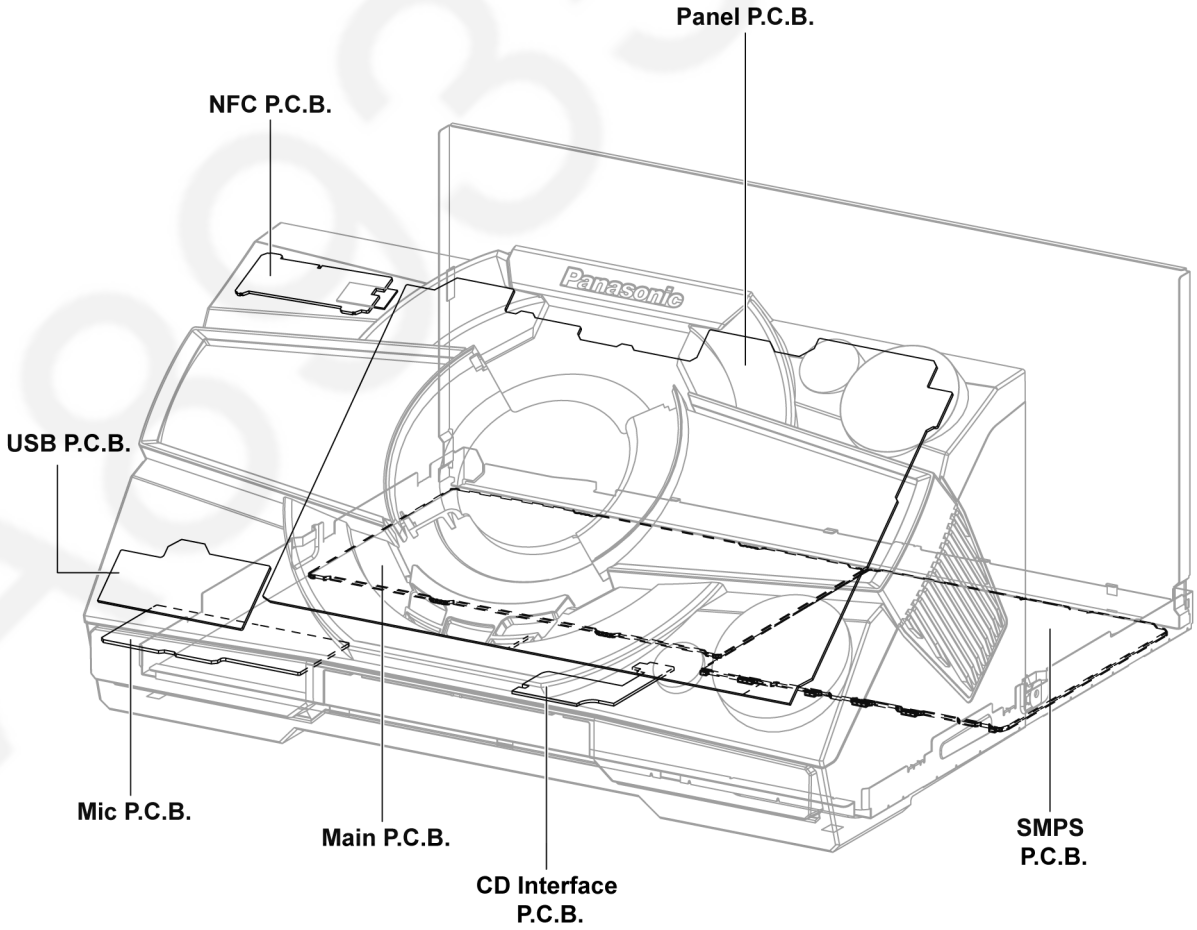

8.4. Disassembly of Top Cabinet

Step 1 Remove 5 screws.

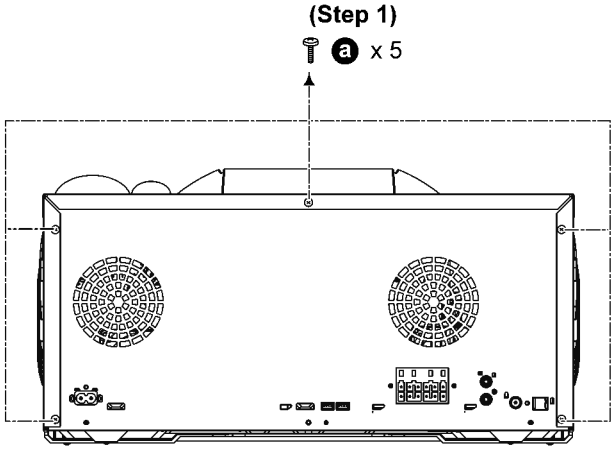

Step 2 Remove 2 screws.

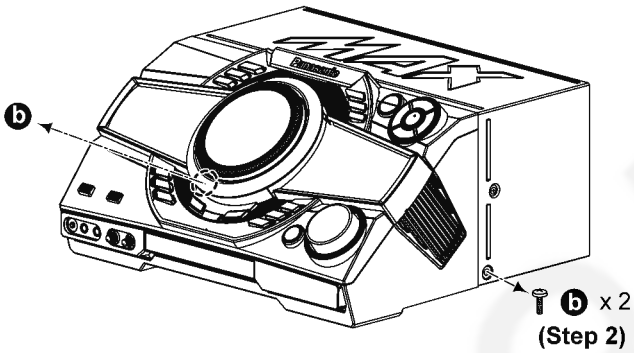

Step 3 Remove Top Cabinet.

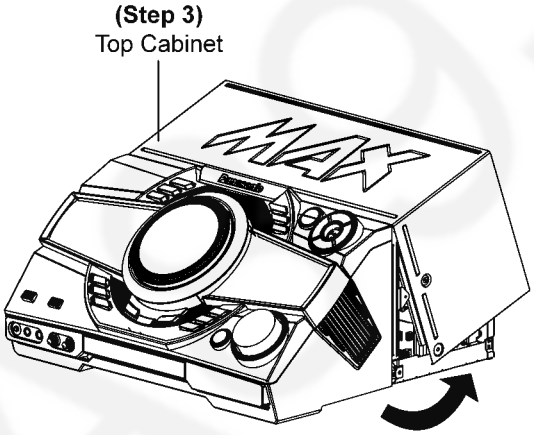

8.5. Disassembly of Front Panel Unit

- **Refer to "Disassembly of Top Cabinet Assembly Unit".**

Step 1 Detach 12P Cable at connector (P9001) on Main P.C.B..
Step 2 Detach 9P Cable at connector (P1803) on Main P.C.B..
Step 3 Detach 30P FFC at connector (P1802) on Main P.C.B..
Step 4 Detach 12P FFC at connector (P1804) on Main P.C.B..

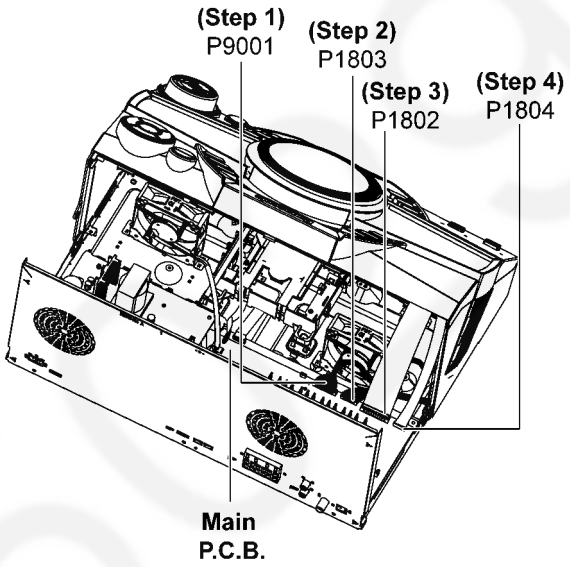

Step 5 Release catches.
Step 6 Remove Front Panel Unit.

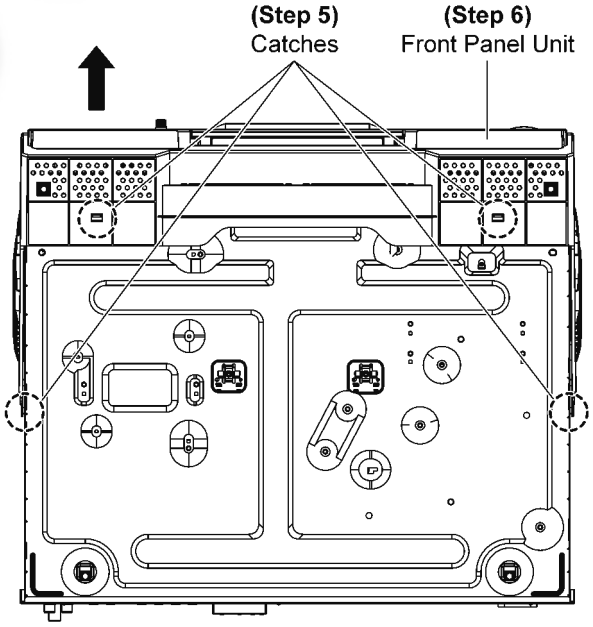

8.6. Disassembly of Panel P.C.B.

- **Refer to “Disassembly of Top Cabinet Assembly Unit”.**
- **Refer to “Disassembly of Front Panel Unit”.**

Step 1 Remove DJ Table.
Step 2 Remove Volume Knob.

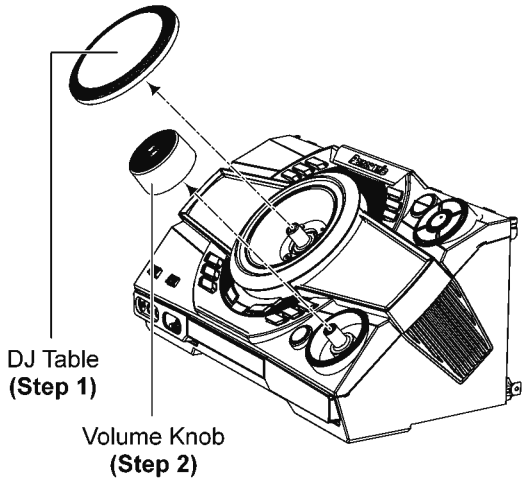

Step 3 Remove 15 screws.

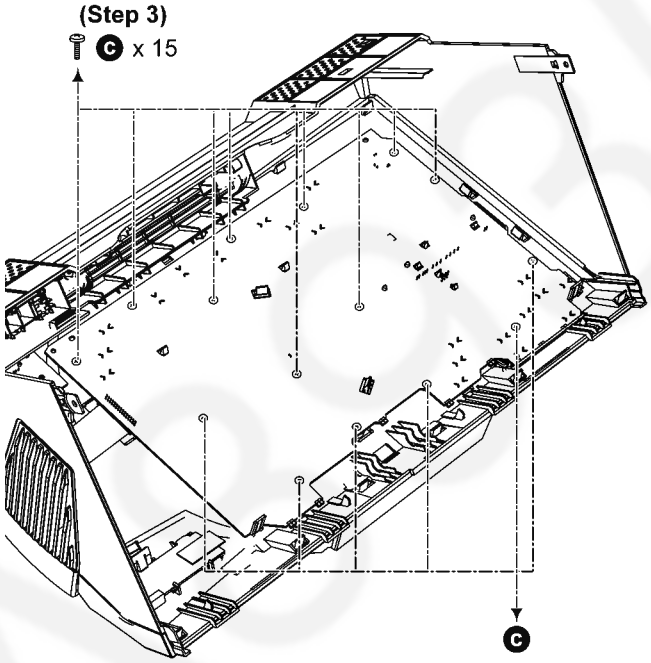

Step 4 Release catches.
Step 5 Remove Panel P.C.B..

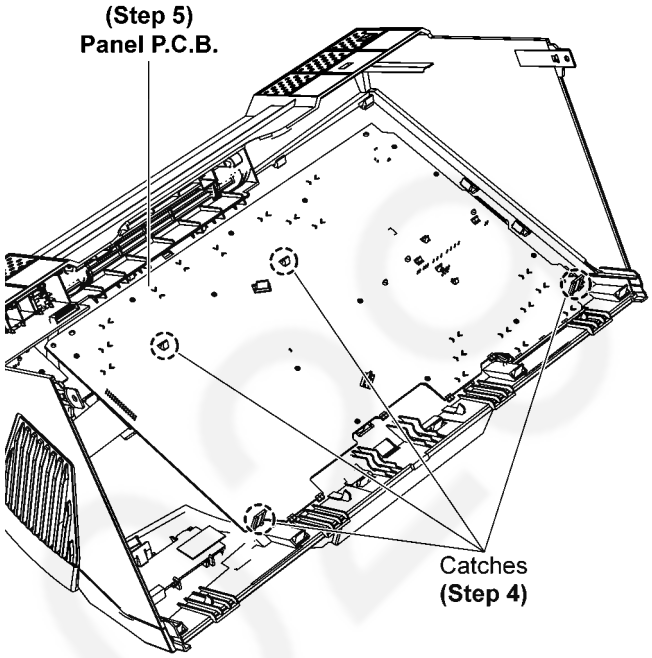

8.7. Disassembly NFC P.C.B.

- **Refer to “Disassembly of Top Cabinet Assembly Unit”.**
- **Refer to “Disassembly of Front Panel Unit”.**

> **Caution:**
> In case either NFC P.C.B. or Main P.C.B. should break down, they need to be replaced at the same time as a pair.

Step 1 Release catch.
Step 2 Remove NFC P.C.B..

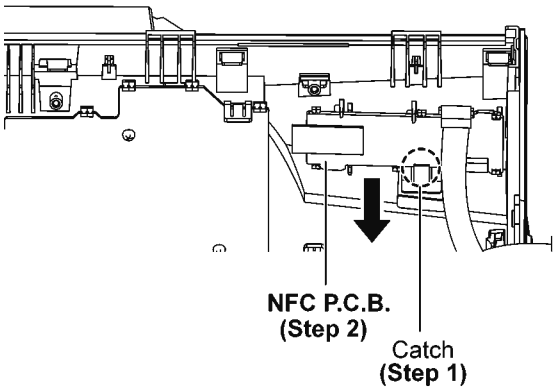

8.8. Disassembly of USB P.C.B.

- **Refer to “Disassembly of Top Cabinet Assembly Unit”.**
- **Refer to “Disassembly of Front Panel Unit”.**

Step 1 Remove 2 screws.
Step 2 Release catches.
Step 3 Remove USB P.C.B..

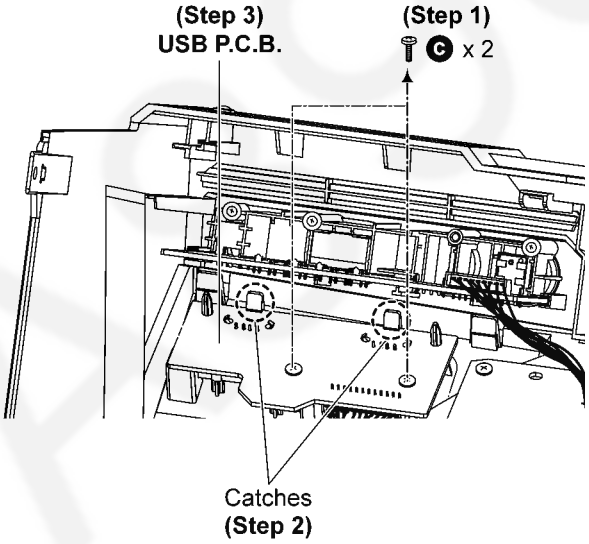

8.9. Disassembly of Mic P.C.B.

- **Refer to “Disassembly of Top Cabinet Assembly Unit”.**
- **Refer to “Disassembly of Front Panel Unit”.**

Step 1 Remove Mic Knob.

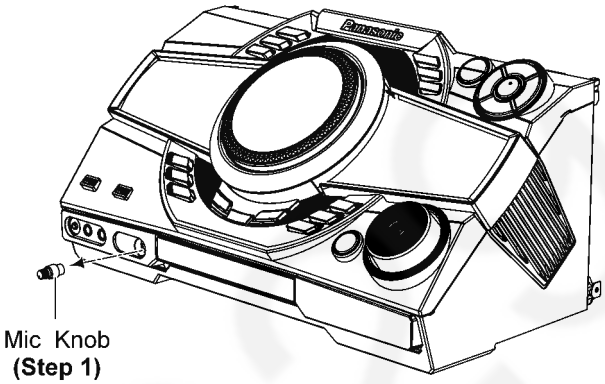

Step 2 Remove 3 screws.
Step 3 Remove Mic P.C.B..

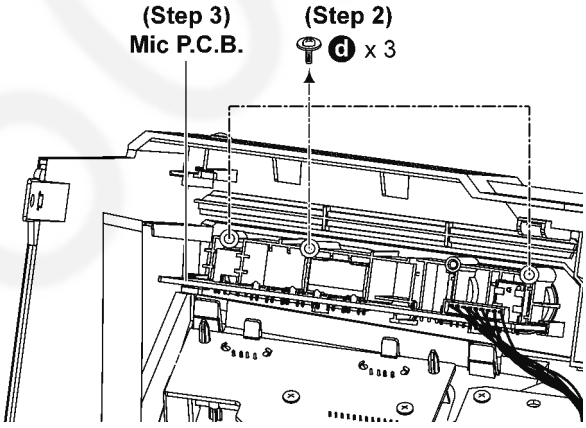

8.10. Disassembly of SMPS P.C.B.

- **Refer to “Disassembly of Top Cabinet Assembly Unit”.**
- **Refer to “Disassembly of Front Panel Unit”.**

Step 1 Remove screw.

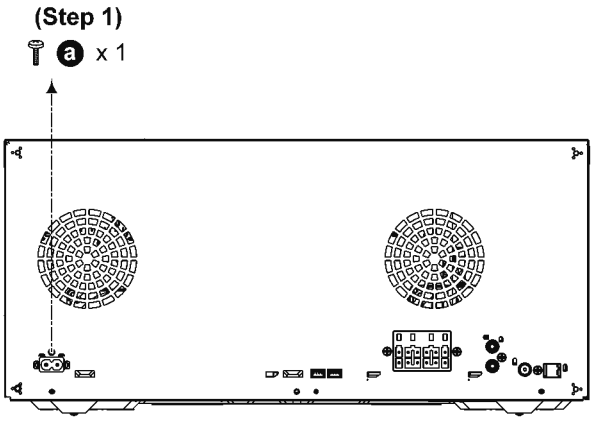

Step 2 Remove 2 screws.
Step 3 Detach 13P Cable at connector (CN1851) on SMPS P.C.B..
Step 4 Release catches.
Step 5 Remove SMPS P.C.B..

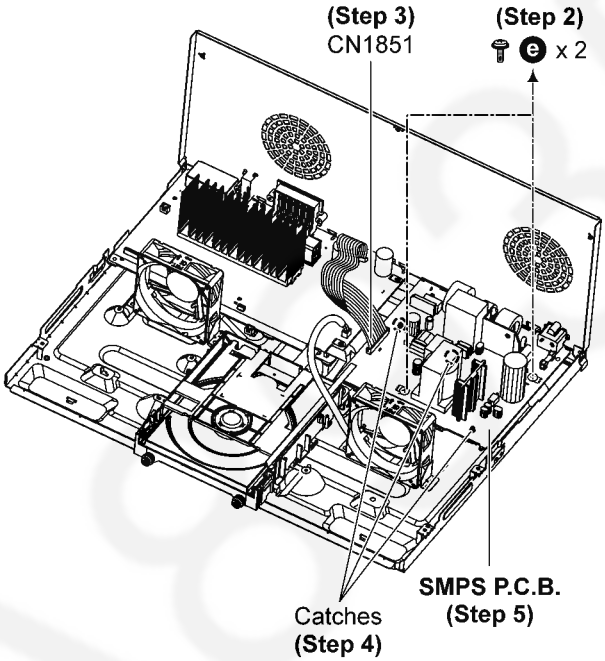

8.11. Disassembly of Main P.C.B.

- **Refer to “Disassembly of Top Cabinet Assembly Unit”.**
- **Refer to “Disassembly of Front Panel Unit”.**

Caution:
In case either Main P.C.B. or NFC P.C.B. should break down, they need to be replaced at the same time as a pair.

Step 1 Remove 4 screws.

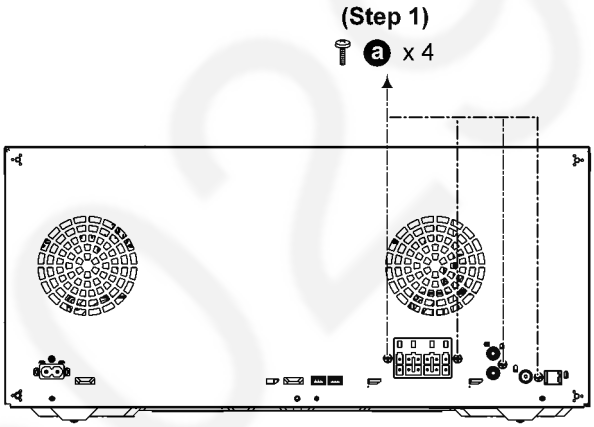

Step 2 Remove 4 screws.

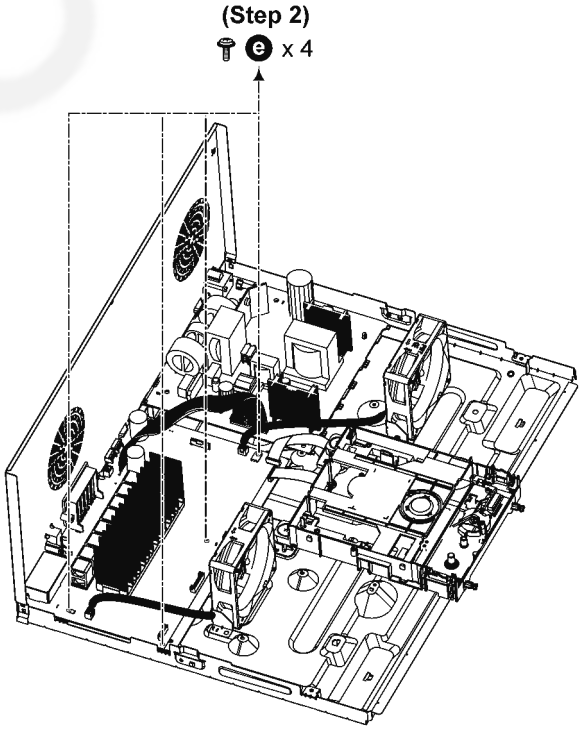

Step 3 Detach 13P Cable at connector (CN1851) on SMPS P.C.B..
Step 4 Detach 2P Cable at connector (CN2105) on Main P.C.B..
Step 5 Detach 2P Cable at connector (CN2104) on Main P.C.B..
Step 6 Detach 24P FFC at connector (P5002) on Main P.C.B..
Step 7 Detach 10P FFC at connector (P5001) on Main P.C.B..
Step 8 Remove Main P.C.B..

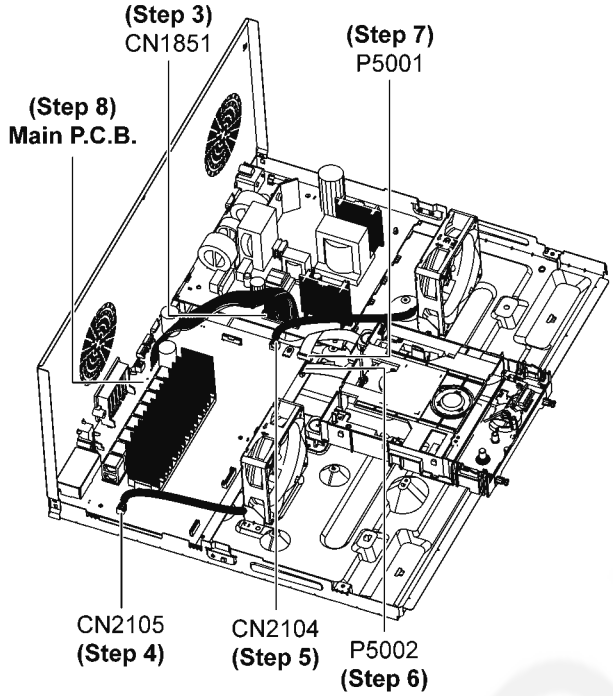

8.12. Disassembly of CD Mechanism Unit

- **Refer to "Disassembly of Top Cabinet Assembly Unit".**
- **Refer to "Disassembly of Front Panel Unit".**

Step 1 Detach 24P FFC at connector (P5002) on Main P.C.B..
Step 2 Detach 10P FFC at connector (P5001) on Main P.C.B..
Step 3 Remove 2 screws.
Step 4 Remove CD Mechanism.

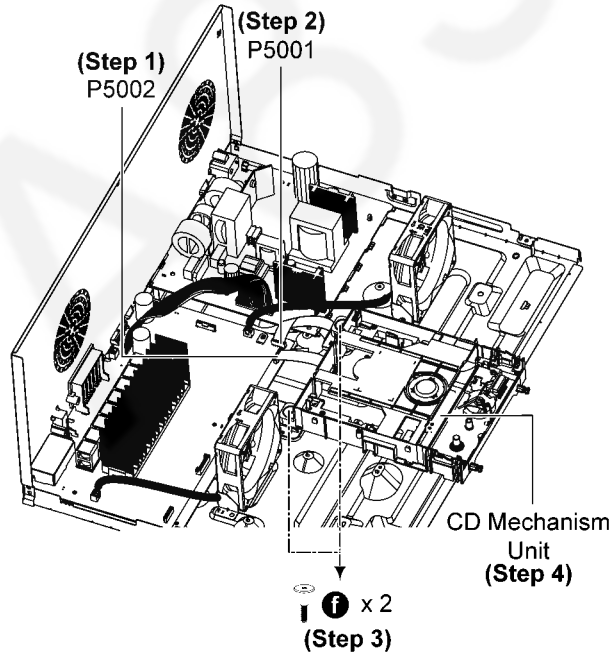

8.13. Disassembly of CD Interface P.C.B.

- **Refer to "Disassembly of Top Cabinet".**
- **Refer to "Disassembly of CD Mechanism Unit".**

Step 1 Remove 2 screws.
Step 2 Desolder pins of motor (M7301).
Step 3 Desolder pins of motor (M7302).
Step 4 Remove CD Interface P.C.B..

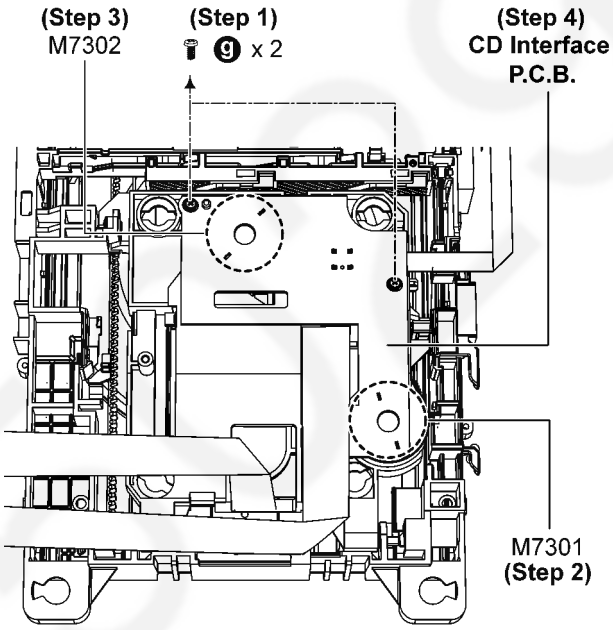

9 Service Position

Note: For description of the disassembly procedures, refer Section 8 of the Service Manual.

9.1. Checking of Panel P.C.B.

Step 1 Remove Top Cabinet.
Step 2 Remove Front Panel Unit.
Step 3 Remove Panel P.C.B..
Step 4 Place Panel P.C.B. on the insulated material.
Step 5 Attach 12P Cable at connector (P9001) on Main P.C.B..
Step 6 Attach 9P Cable at connector (P1803) on Main P.C.B..
Step 7 Attach 30P FFC at connector (P1802) on Main P.C.B..
Step 8 Attach 12P FFC at connector (P1804) on Main P.C.B..
Step 9 Panel P.C.B. can be checked as diagram shown.

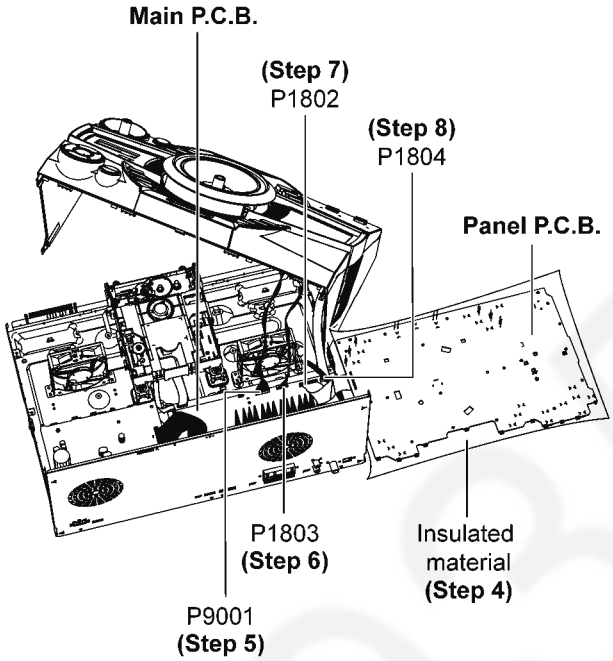

9.2. Checking of SMPS P.C.B.

Step 1 Remove Top Cabinet.
Step 2 Remove SMPS P.C.B..
Step 3 Place SMPS P.C.B. on the insulated material.
Step 4 Attach 13P Cable at connector (CN1851) on SMPS P.C.B..
Step 5 SMPS P.C.B. can be checked as diagram shown.

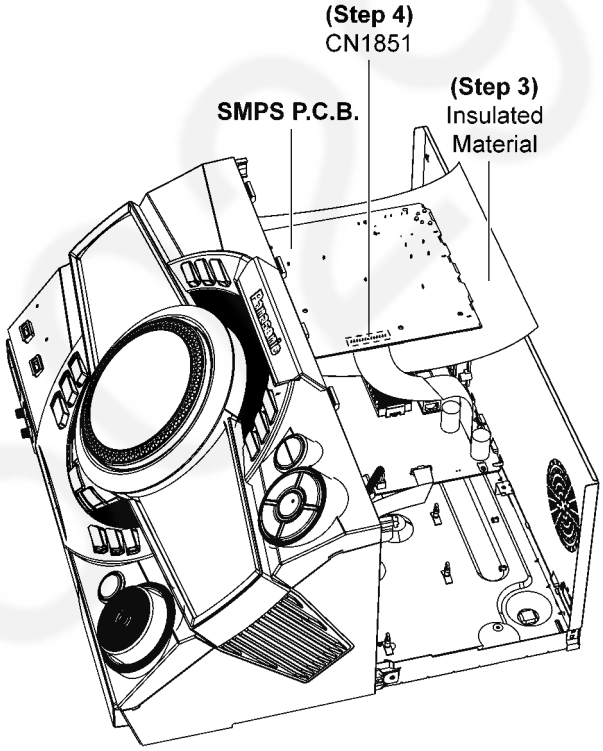

A89359

9.3. Checking of Main P.C.B.

Step 1 Remove Top Cabinet.
Step 2 Remove Main P.C.B..
Step 3 Place Main P.C.B. on the insulated material as shown.
Step 4 Attach 13P Cable at connector (CN1851) on SMPS P.C.B..
Step 5 Attach 2P Cable at connector (CN2105) on Main P.C.B..
Step 6 Attach 2P Cable at connector (CN2104) on Main P.C.B..
Step 7 Attach 24P FFC at connector (P5002) on Main P.C.B..
Step 8 Attach 10P FFC at connector (P5001) on Main P.C.B..
Step 9 Main P.C.B. can be checked as diagram shown.

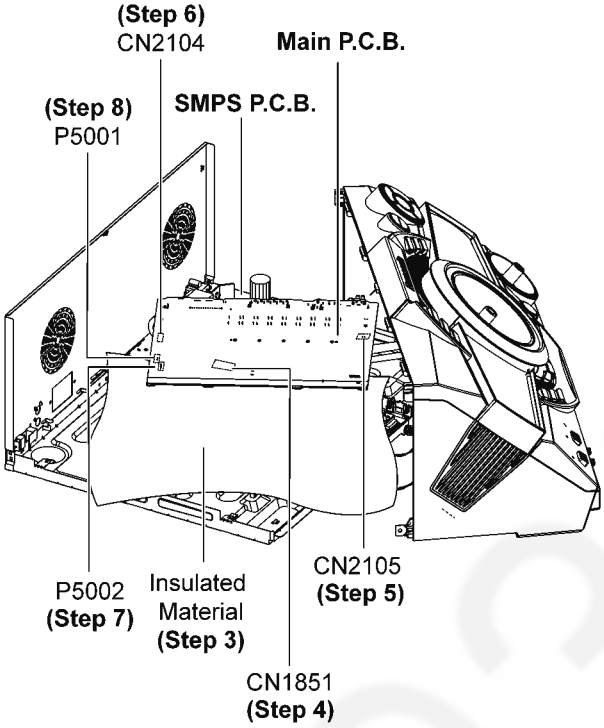

A8935029

10 Block Diagram

10.1. System Control

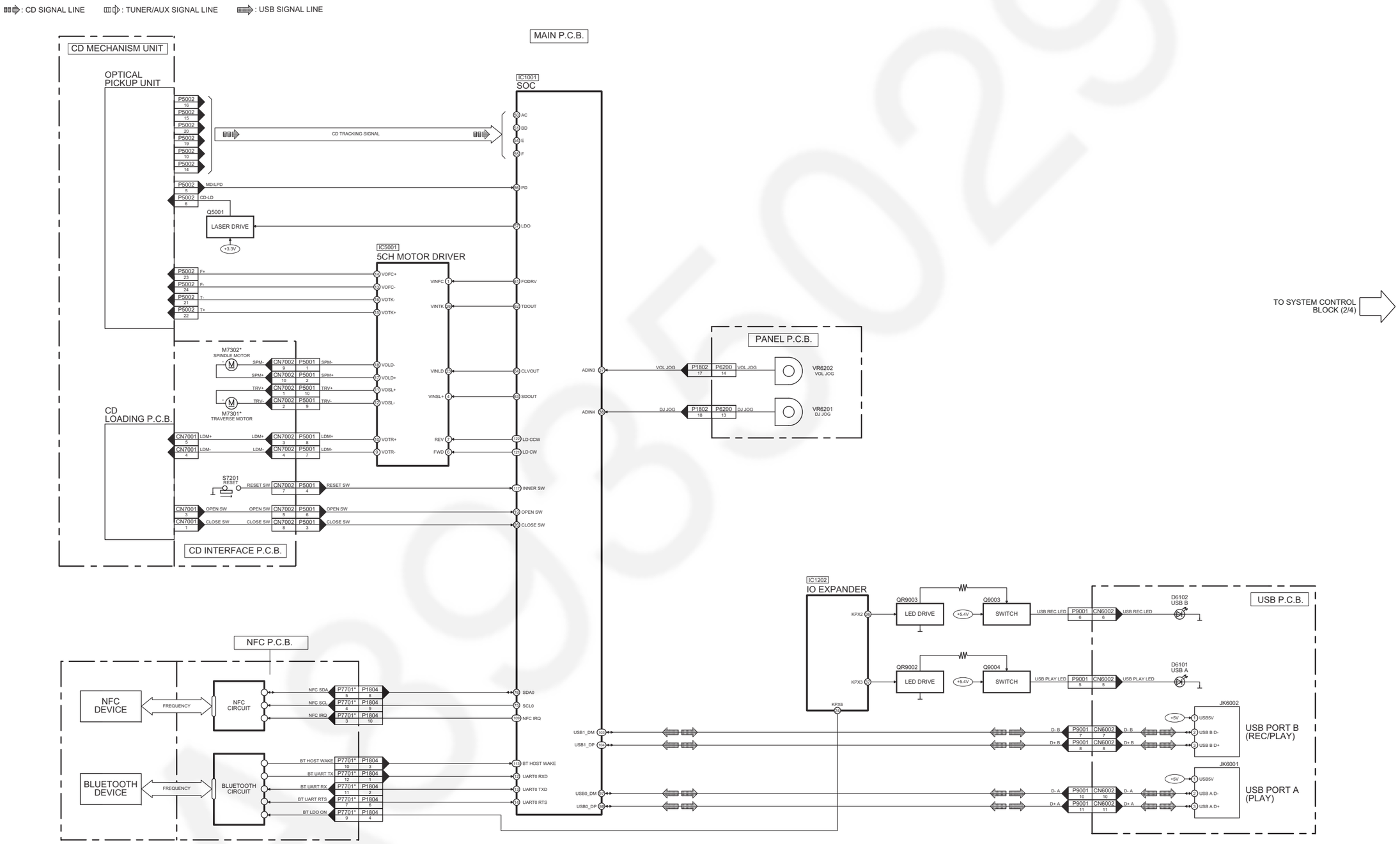

NOTE: “ * ” REF IS FOR INDICATION ONLY

SA-MAX5000PN/PS SYSTEM CONTROL (1/4) BLOCK DIAGRAM

: CD SIGNAL LINE : TUNER/AUX SIGNAL LINE : USB SIGNAL LINE

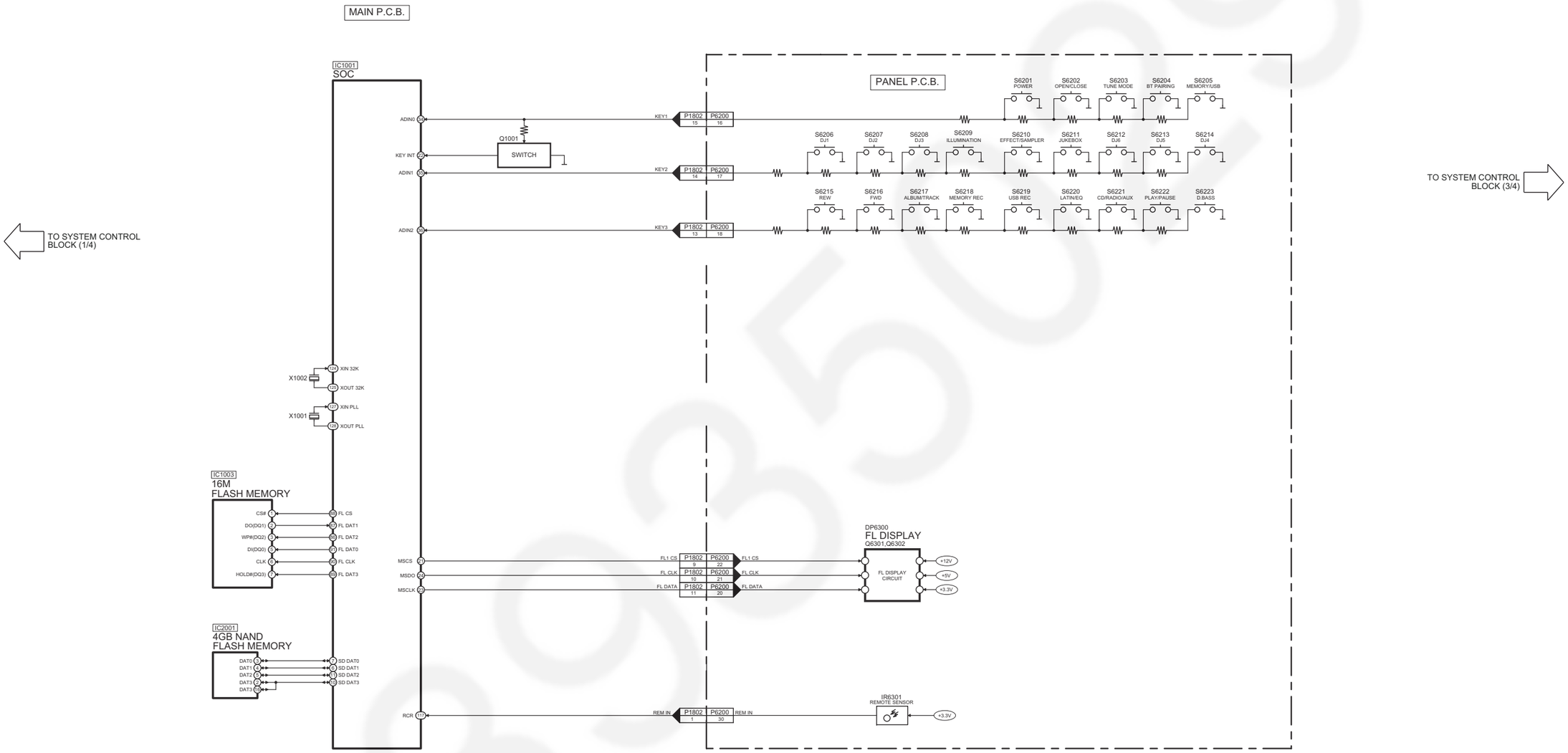

SA-MAX5000PN/PS SYSTEM CONTROL (2/4) BLOCK DIAGRAM

: CD SIGNAL LINE : TUNER/AUX SIGNAL LINE : USB SIGNAL LINE

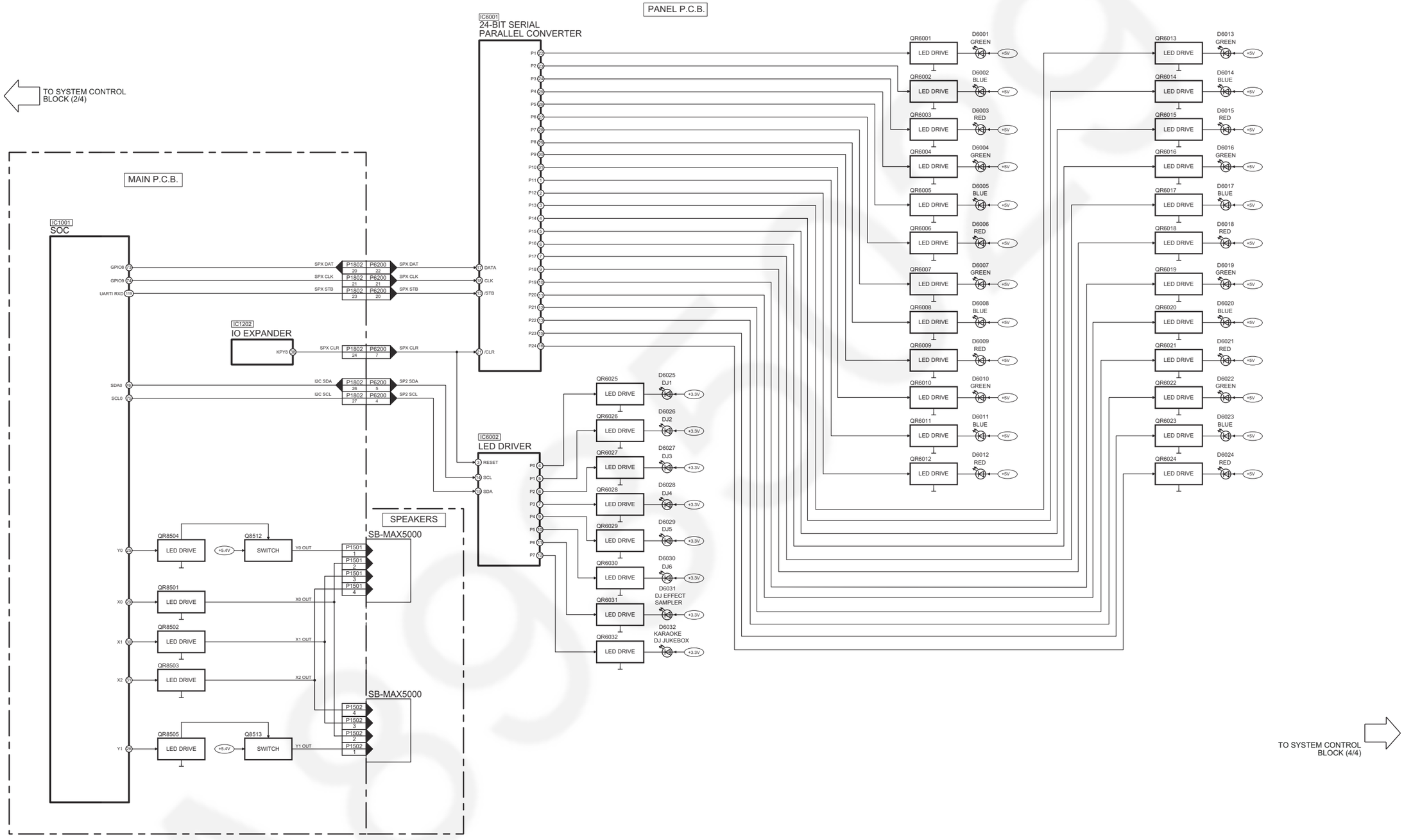

SA-MAX5000PN/PS SYSTEM CONTROL (3/4) BLOCK DIAGRAM

: CD SIGNAL LINE : TUNER/AUX SIGNAL LINE : USB SIGNAL LINE

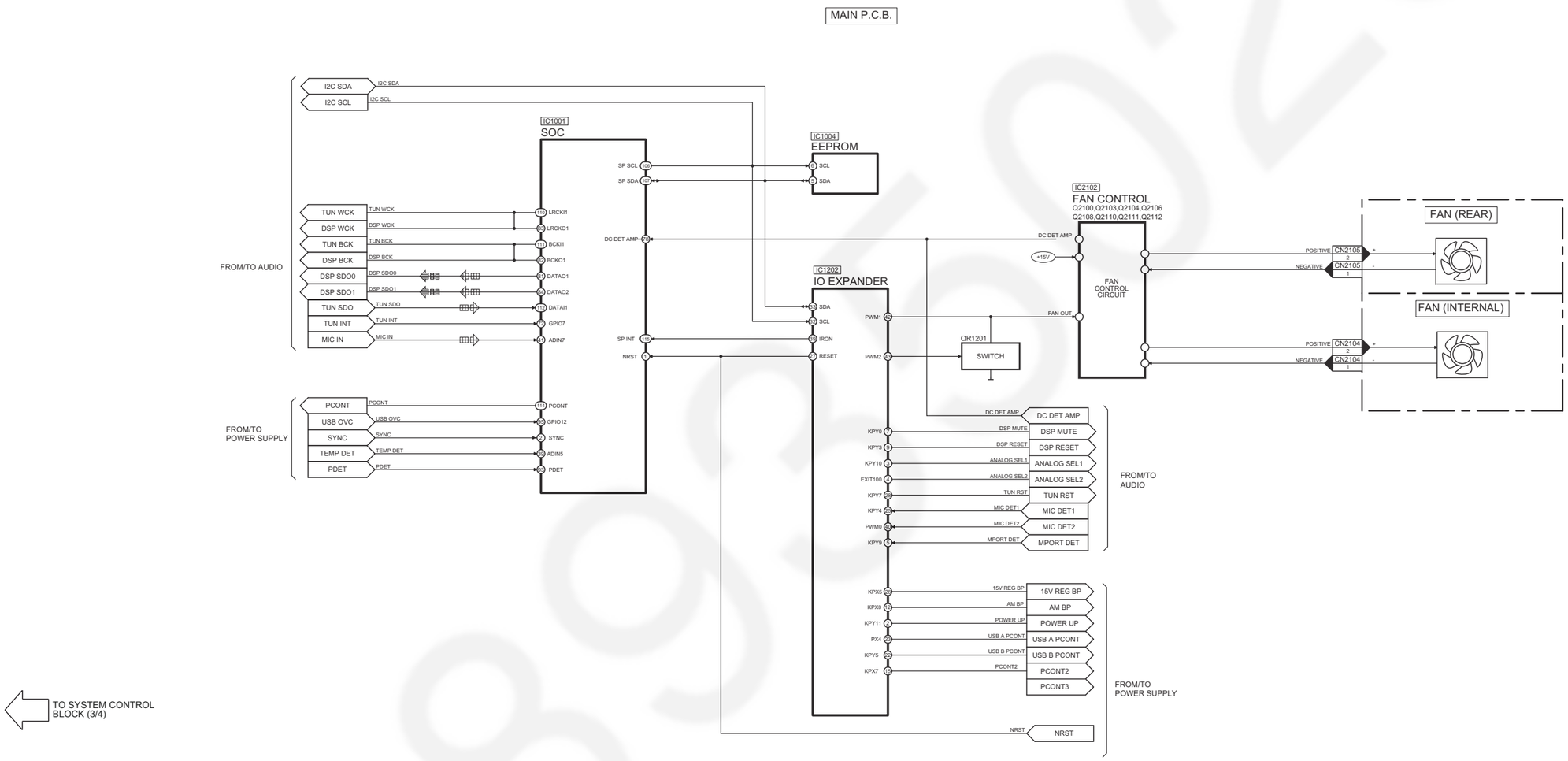

SA-MAX5000PN/PS SYSTEM CONTROL (4/4) BLOCK DIAGRAM

10.2. Audio

: CD SIGNAL LINE : TUNER/AUX/MIC SIGNAL LINE : OUTPUT SIGNAL LINE : AM SIGNAL LINE : FM SIGNAL LINE

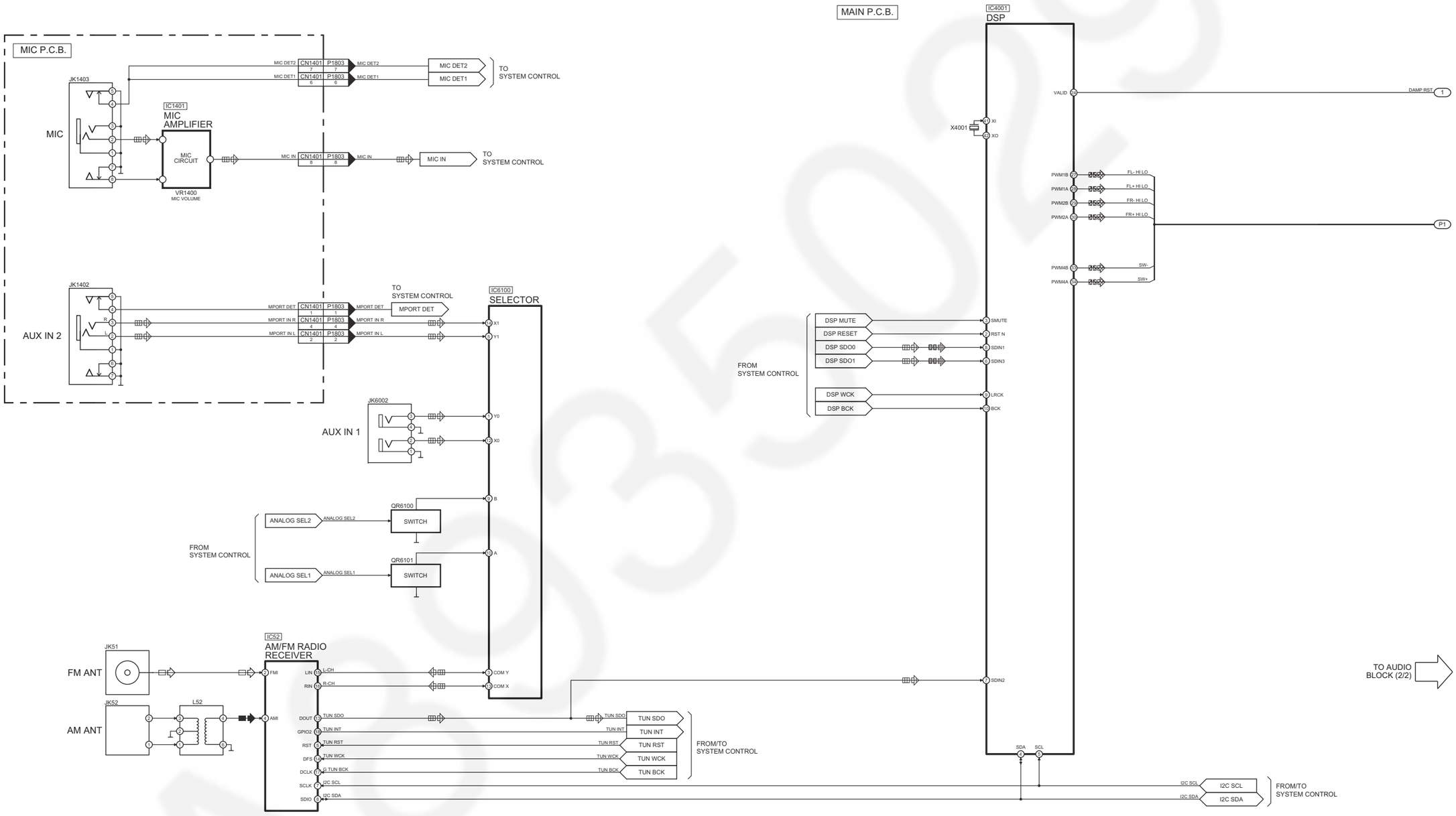

SA-MAX5000PN/PS AUDIO (1/2) BLOCK DIAGRAM

: CD SIGNAL LINE : TUNER/AUX/MIC SIGNAL LINE : OUTPUT SIGNAL LINE : AM SIGNAL LINE : FM SIGNAL LINE

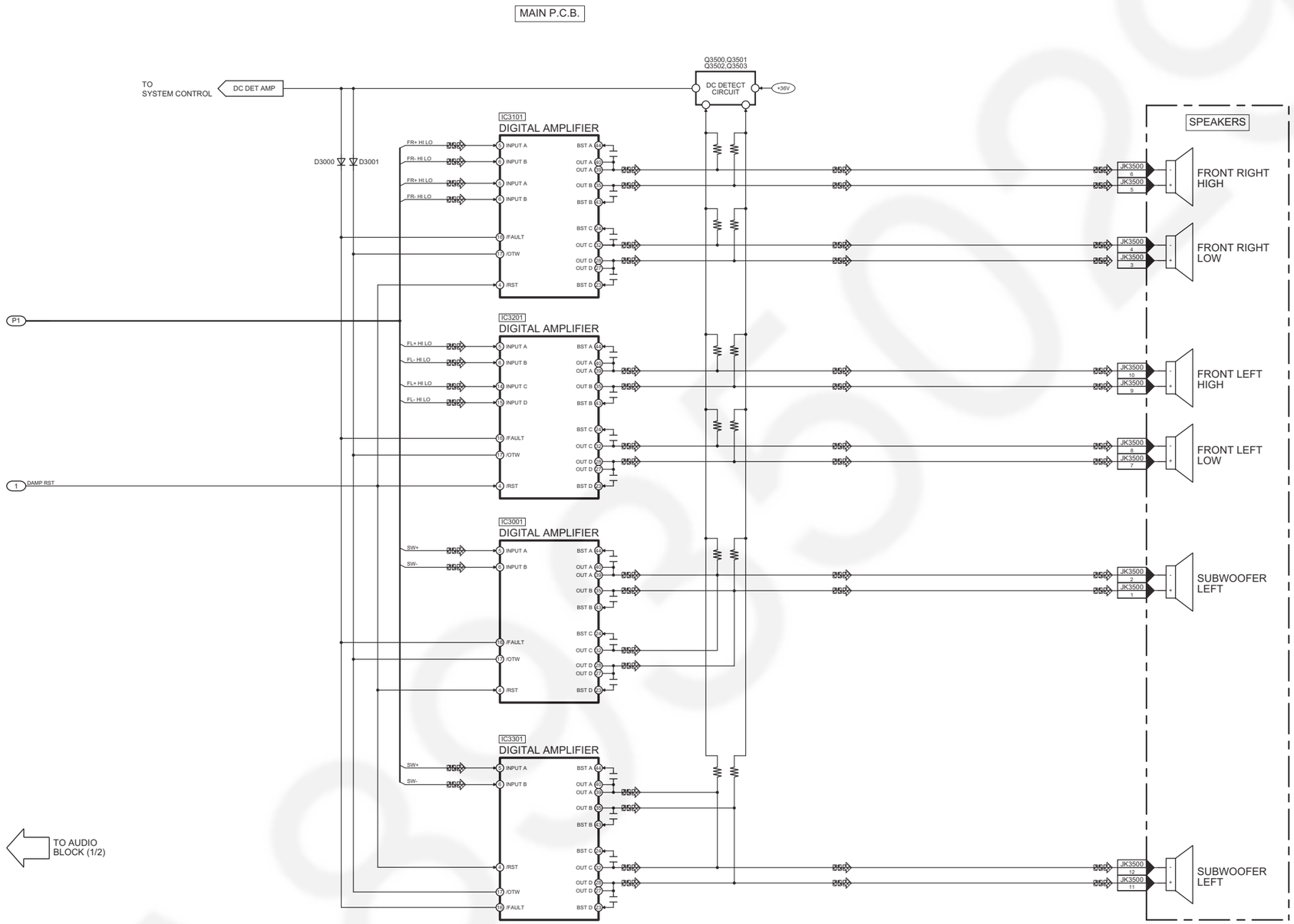

SA-MAX5000PN/PS AUDIO (2/2) BLOCK DIAGRAM

10.3. Power Supply

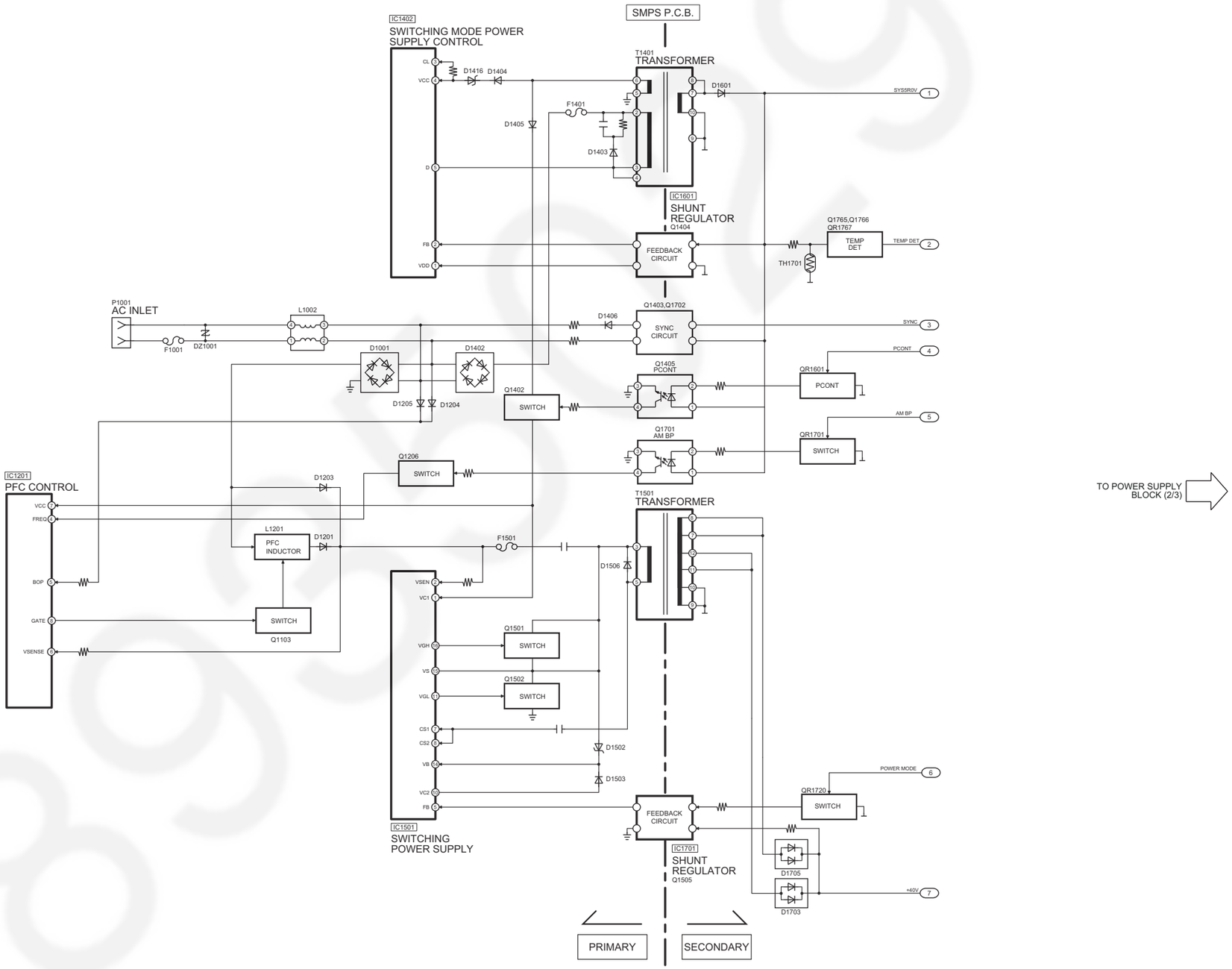

SA-MAX5000PN/PS POWER SUPPLY (1/3) BLOCK DIAGRAM

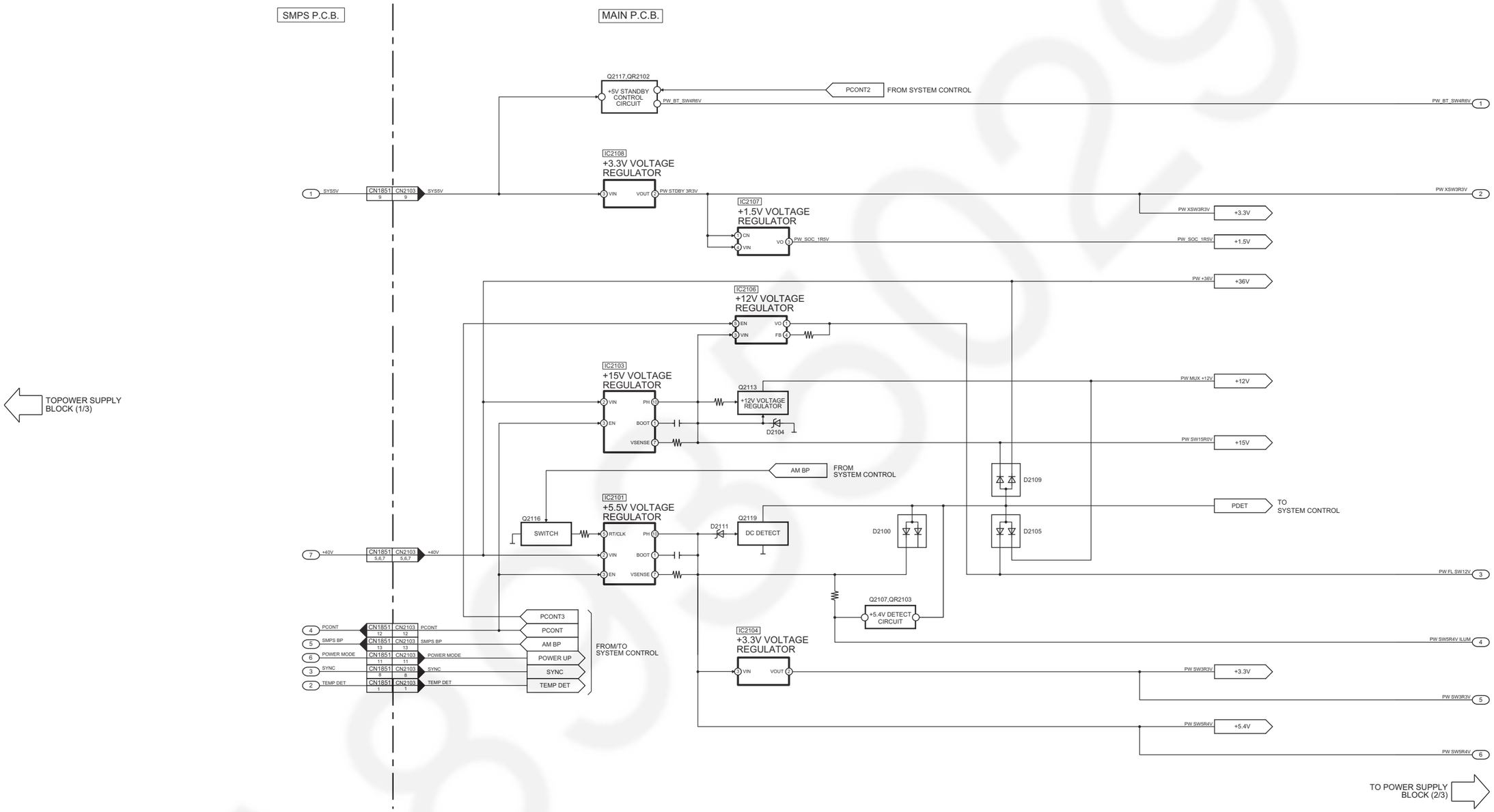

SA-MAX5000PN/PS POWER SUPPLY (2/3) BLOCK DIAGRAM

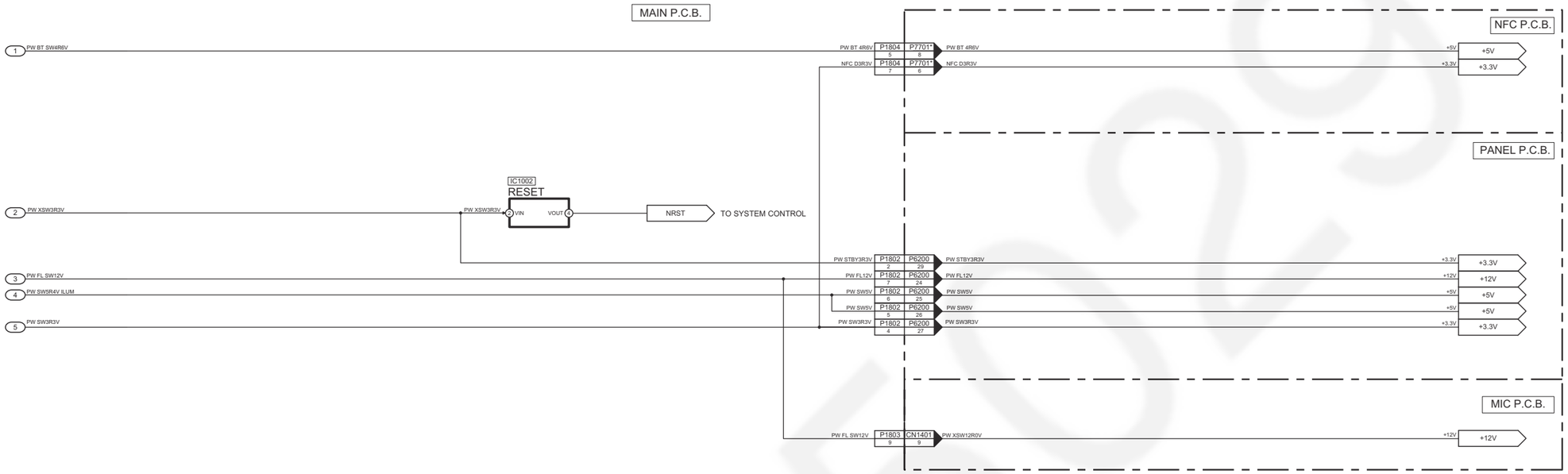

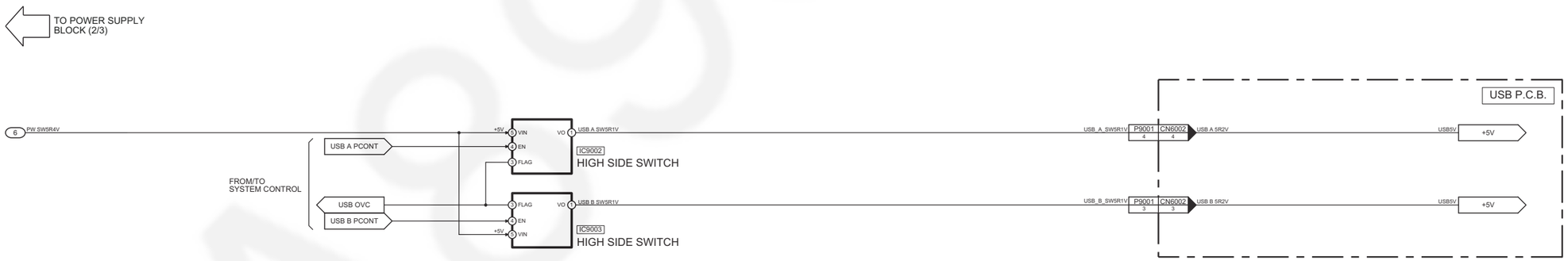

NOTE: " * " REF IS FOR INDICATION ONLY

SA-MAX5000PN/PS POWER SUPPLY (3/3) BLOCK DIAGRAM

11 Wiring Connection Diagram

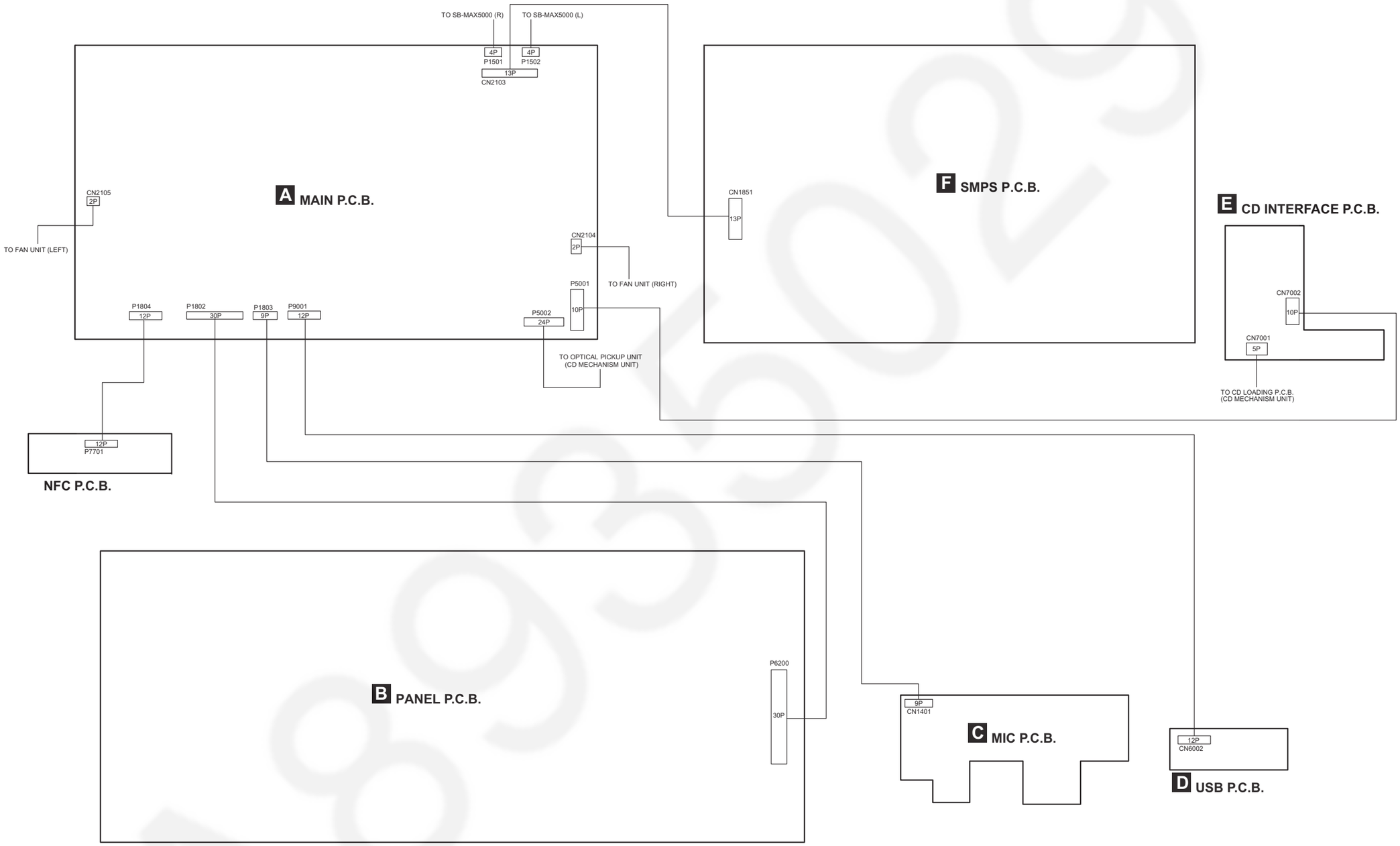

SA-MAX5000PN/PS WIRING CONNECTION DIAGRAM

12 Schematic Diagram

12.1. Schematic Diagram Notes

- **This schematic diagram may be modified at any time with the development of new technology.**

Notes:

S6201:	Power (⏻/I) switch.
S6202:	Open/Close switch.
S6203:	Tune mode switch.
S6204:	Bluetooth/Pairing switch.
S6205:	Memory/USB switch.
S6206:	DJ1 switch.
S6207:	DJ2 switch.
S6208:	DJ3 switch.
S6209:	Illumination switch.
S6210:	Effect/Sampler switch.
S6211:	Jukebox switch.
S6212:	DJ6 switch.
S6213:	DJ5 switch.
S6214:	DJ4 switch.
S6215:	Rewind/Skip (⏮ / ◀◀) switch.
S6216:	Forward/Skip (▶▶ / ⏭) switch.
S6217:	Album/Track switch.
S6218:	Memory/Record switch.
S6219:	USB Rec switch.
S6220:	Latin/EQ switch.
S6221:	CD/Radio/Aux switch.
S6222:	Play/Pause switch.
S6223:	D.Bass switch.
S7201:	Reset switch.
VR1400:	Mic volume Jog.
VR6201:	Multi Control Jog.
VR6202:	Volume Jog.

- Important safety notice:

  Components identified by ⚠ mark have special characteristics important for safety.
  Furthermore, special parts which have purposes of fire-retardant (resistors), high quality sound (capacitors), low-noise (resistors), etc are used.
  When replacing any of components, be sure to use only manufacturer's specified parts shown in the parts list.

- **Resistor**

  Unit of resistance is OHM [Ω] (K=1,000, M=1,000,000).

- **Capacitor**

  Unit of capacitance is μF, unless otherwise noted. F=Farads, pF=pico-Farad.

- **Coil**

  Unit of inductance is H, unless otherwise noted.

- *****

  REF IS FOR INDICATION ONLY.

- Voltage and signal line

  : +B signal line
  : CD signal line
  : Mic/Aux/Tuner signal line
  : Audio signal line
  : USB signal line
  : AM signal line
  : FM signal line

CAUTION: FOR CONTINUED PROTECTION AGAINST FIRE HAZARD, REPLACE ONLY WITH SAME TYPE F1001 T10AH 250V FUSE TYPE F1401 T500mA 250V FUSE TYPE F1501 T5A 250V FUSE

RISK OF FIRE-REPLACE FUSE AS MARKED.

FUSE CAUTION

These symbols located near the fuse indicates that the fuse used is a fast operating type. For continued protection againts fire harzard, replace with the same type fuse. fro rating, refer to the marking adjacent to the symbol.

A89350229

12.2. Main (Damp) Circuit (1/2)

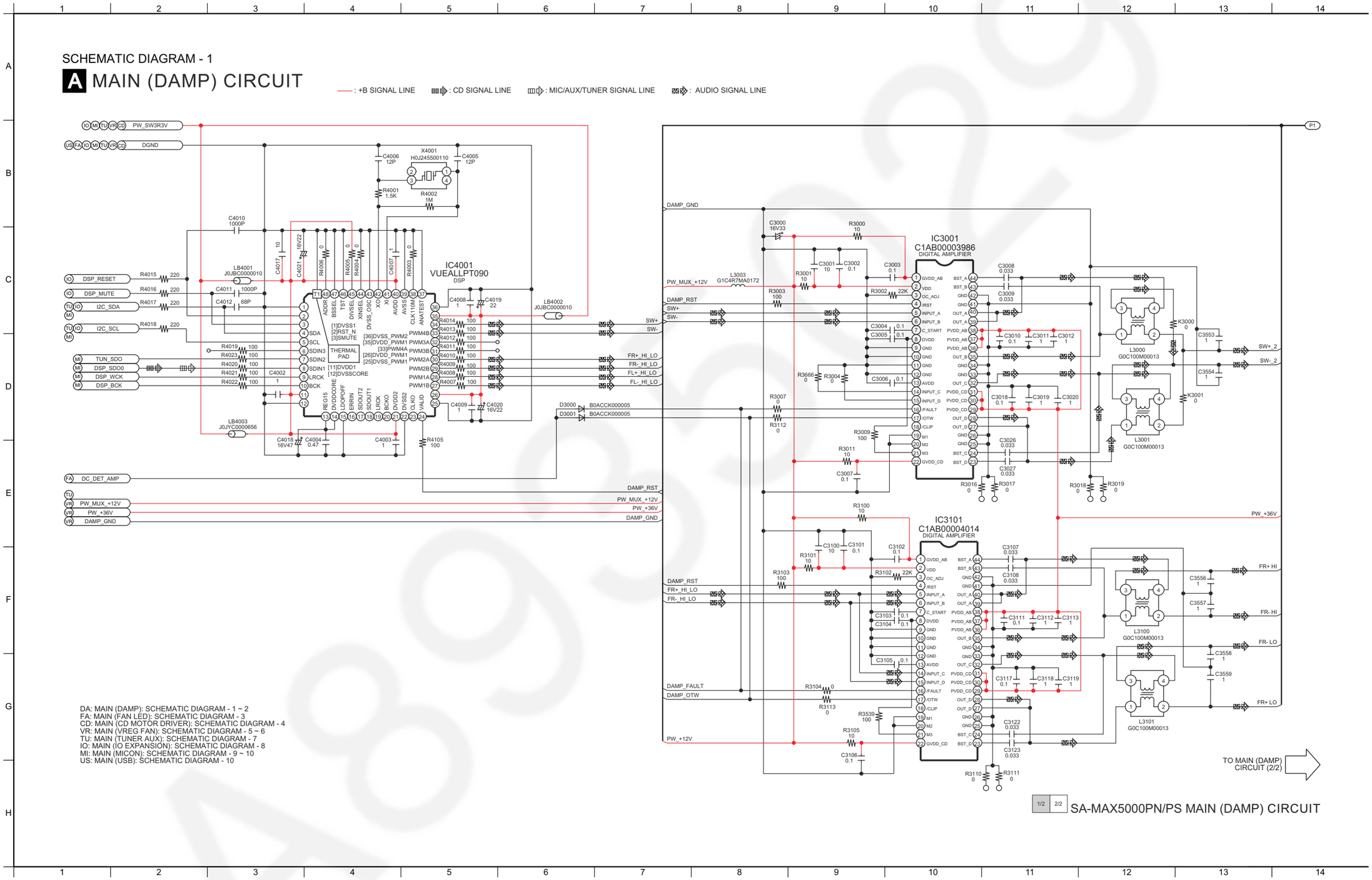

12.3. Main (Damp) Circuit (2/2)

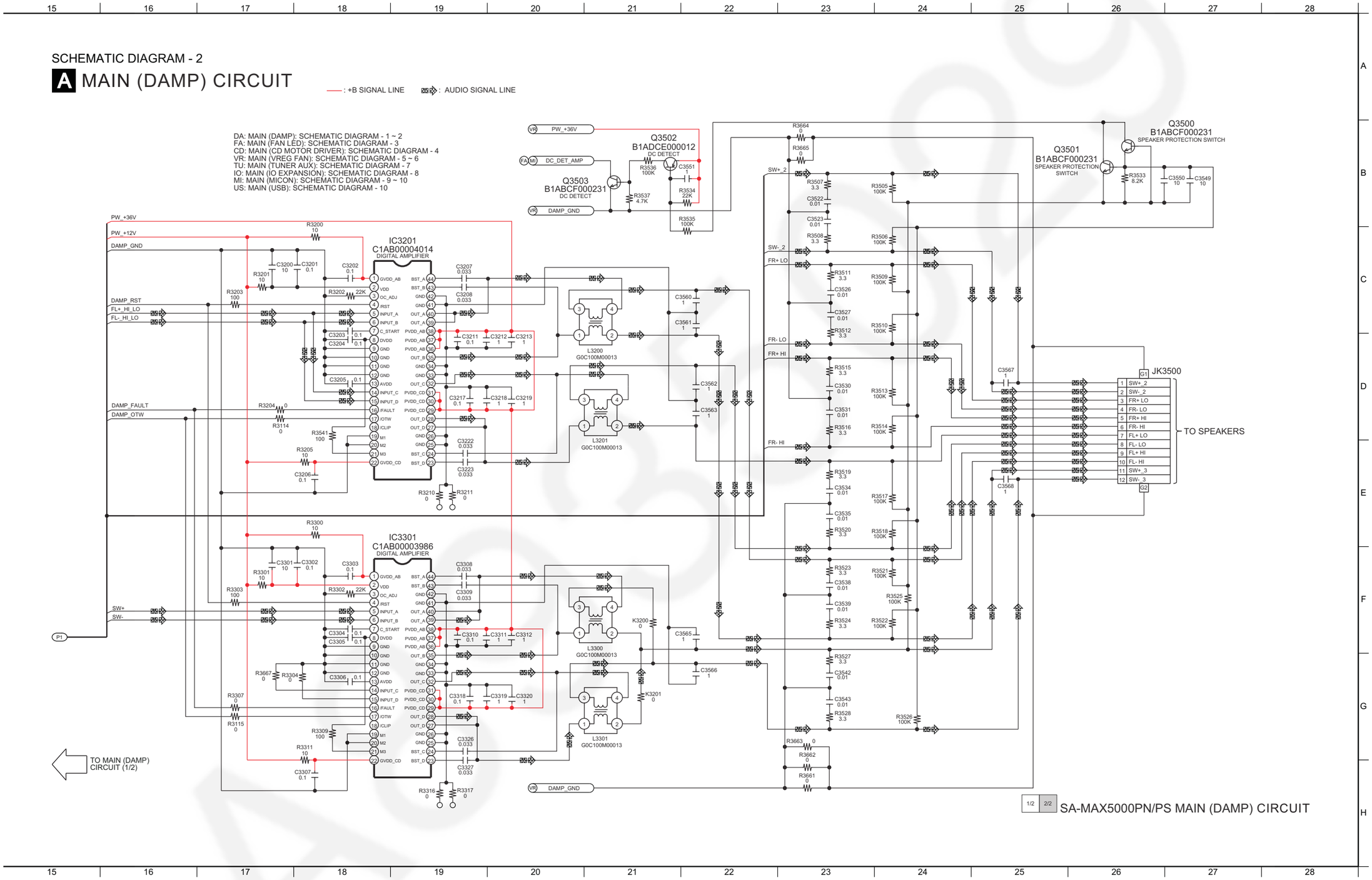

12.4. Main (Fan LED) Circuit

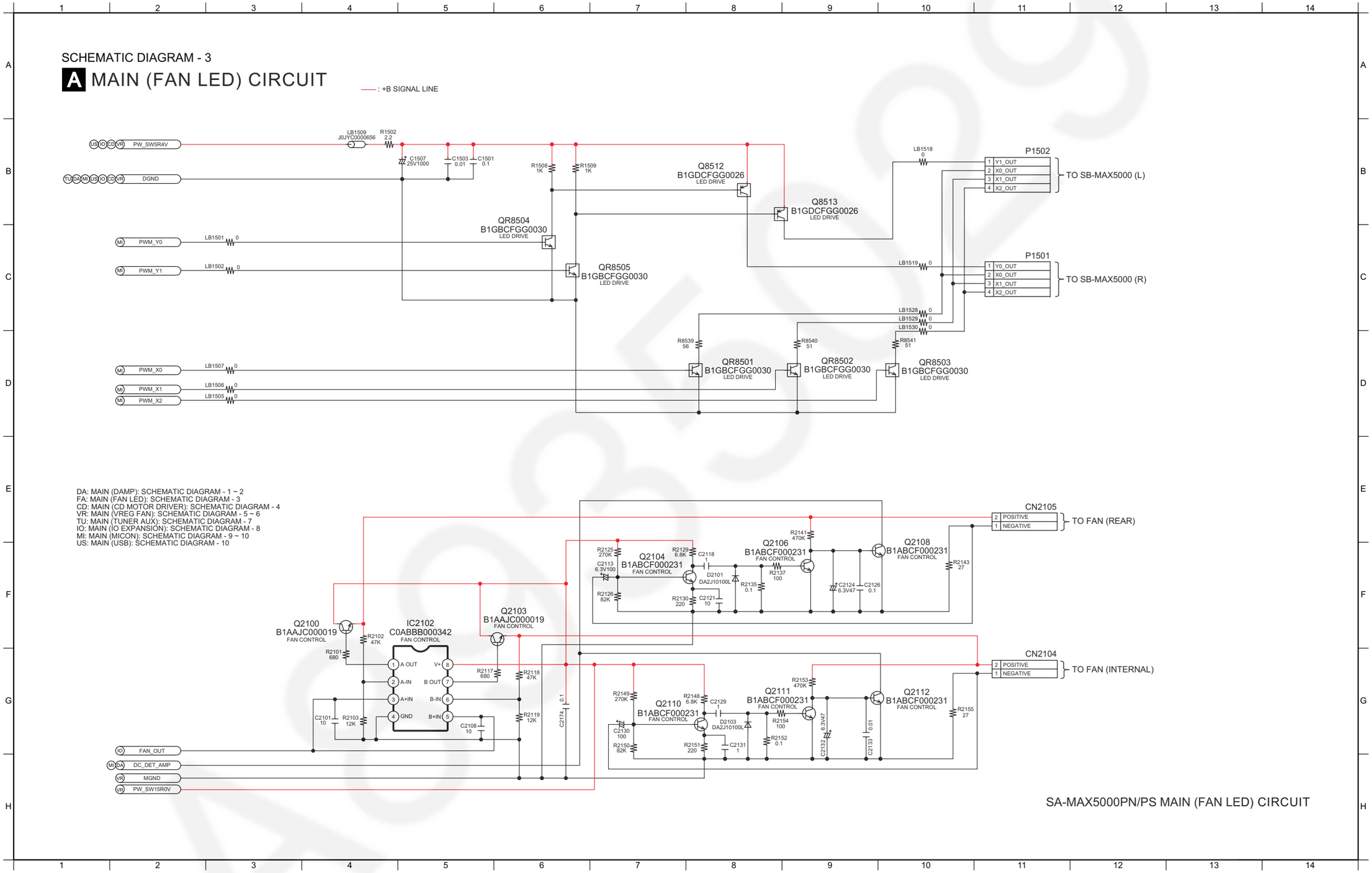

12.5. Main (CD Motor Driver) Circuit

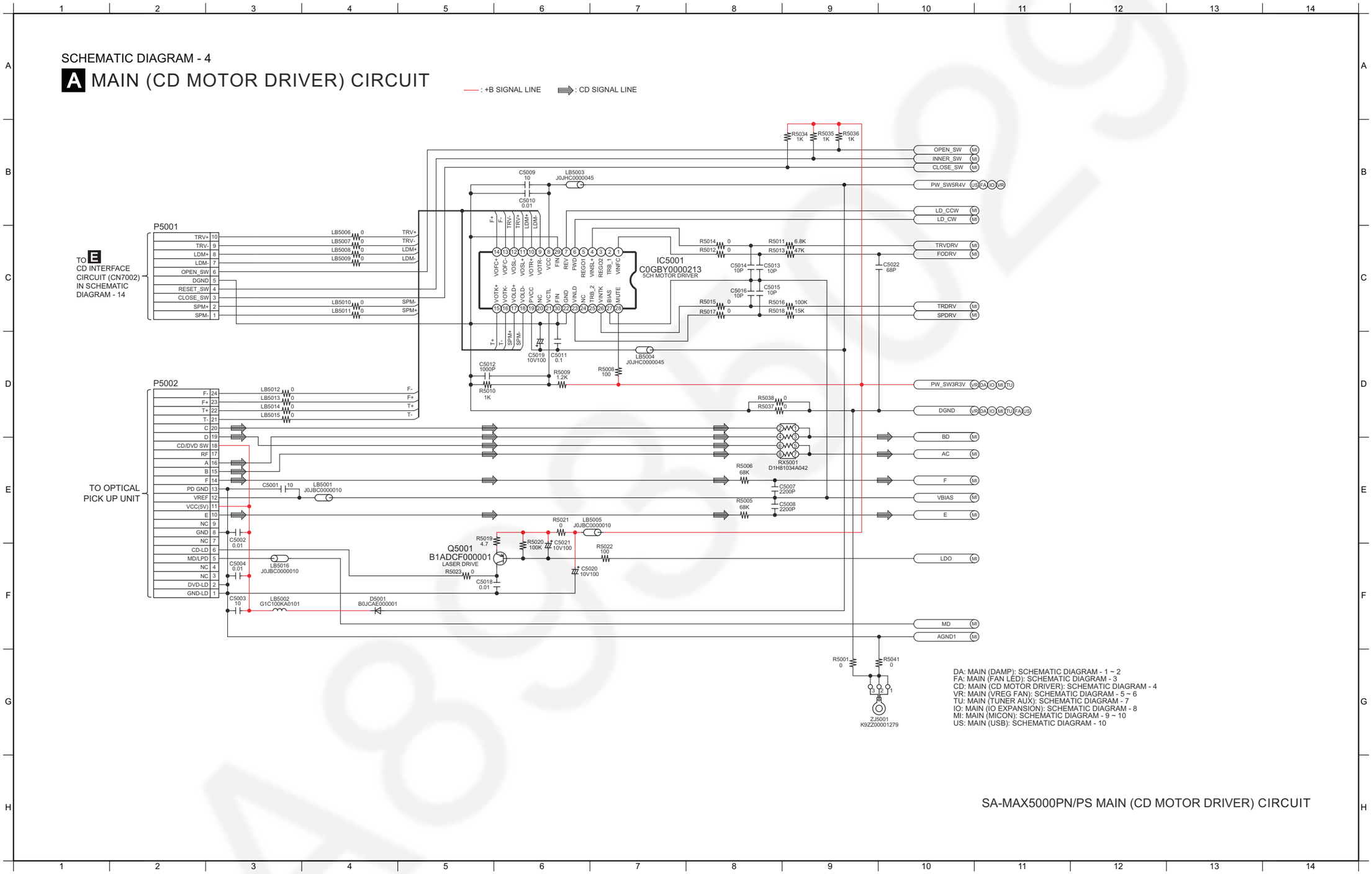

12.6. Main (VREG Fan) Circuit (1/2)

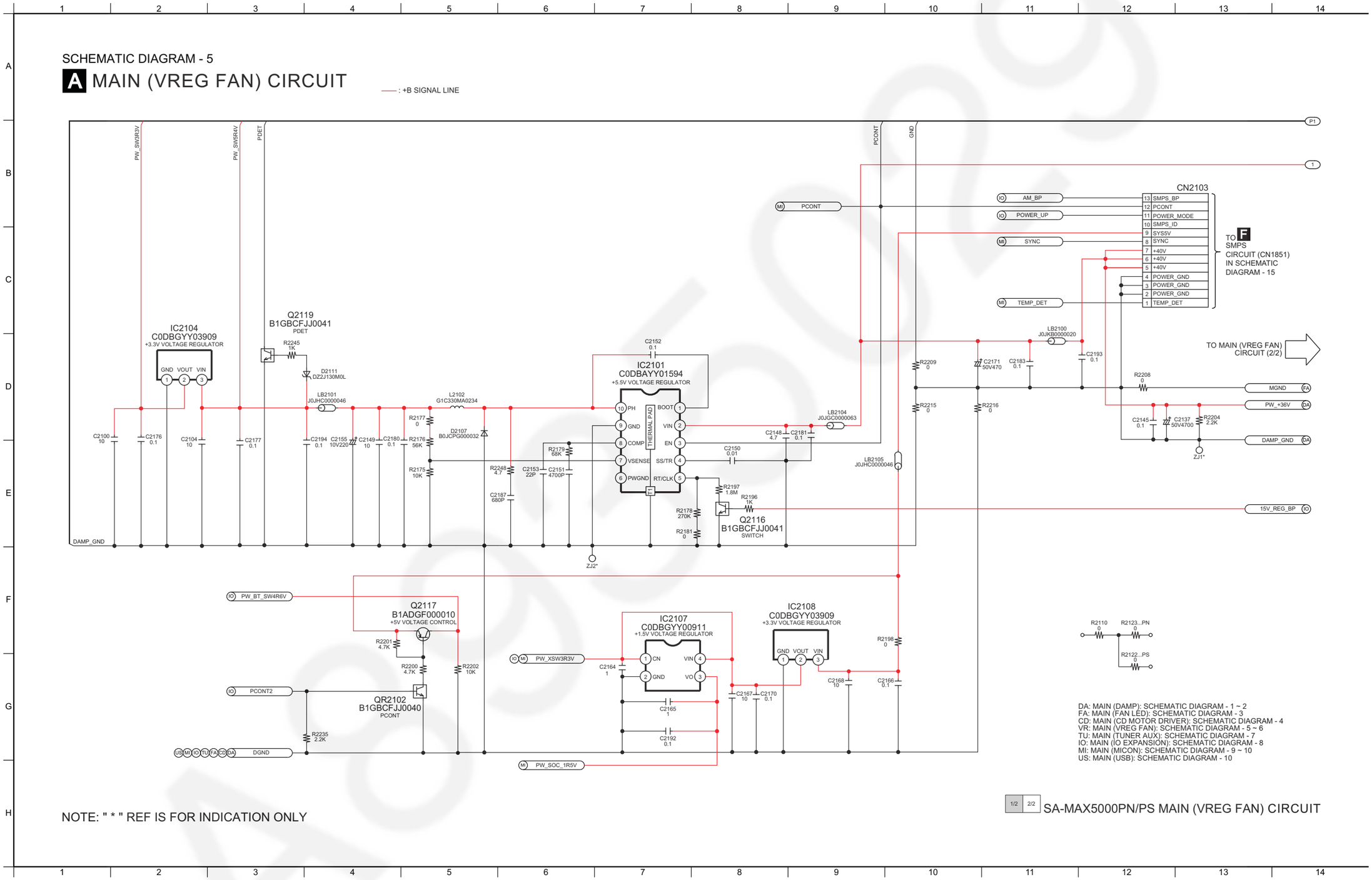

12.7. Main (VREG Fan) Circuit (2/2)

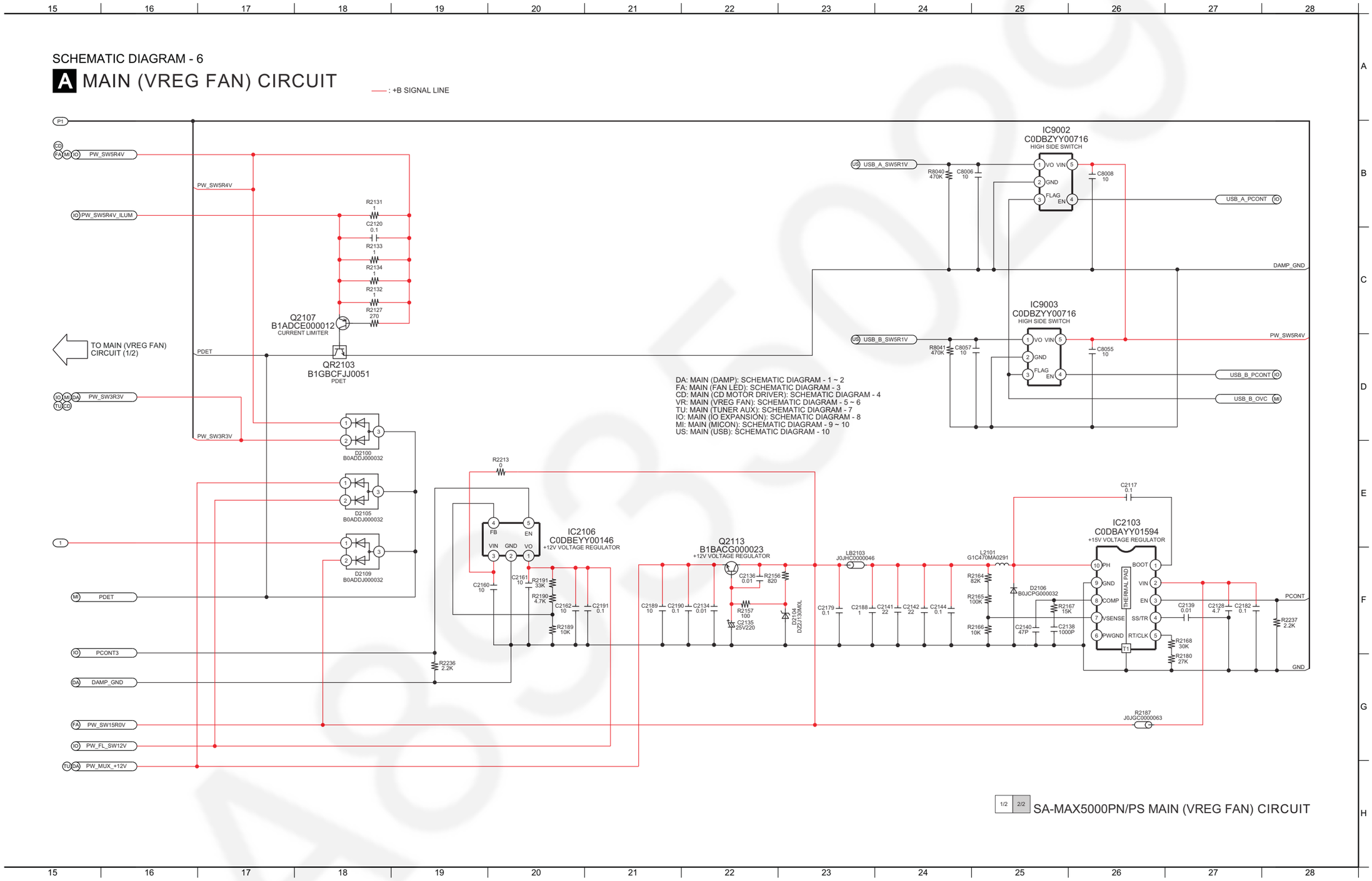

12.8. Main (Tuner AUX) Circuit

SCHEMATIC DIAGRAM - 7

A MAIN (TUNER AUX) CIRCUIT

—— : +B SIGNAL LINE ■▶ : AM SIGNAL LINE □▷ : FM SIGNAL LINE ▭▷ : AUX SIGNAL LINE

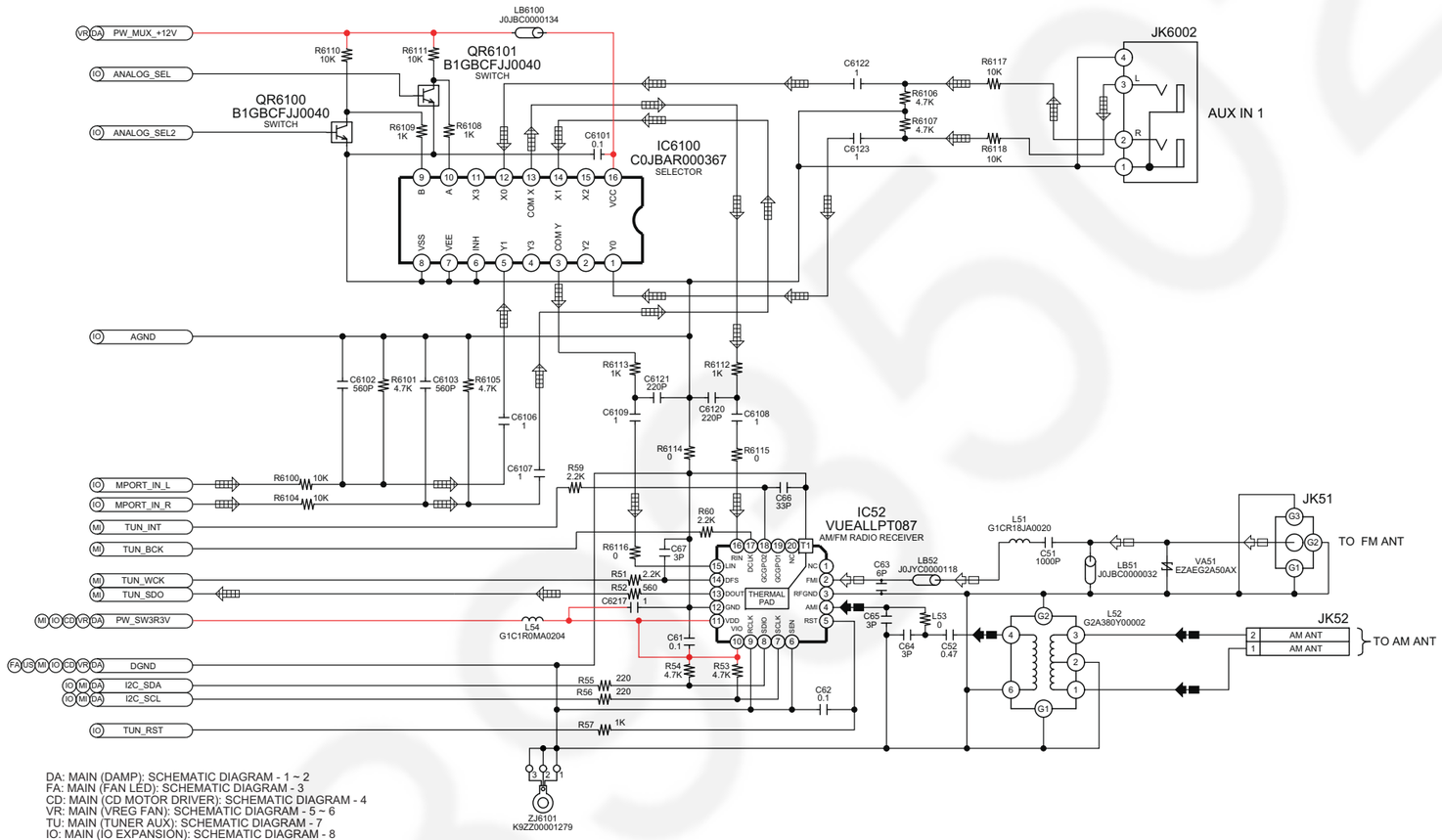

DA: MAIN (DAMP): SCHEMATIC DIAGRAM - 1 ~ 2
FA: MAIN (FAN LED): SCHEMATIC DIAGRAM - 3
CD: MAIN (CD MOTOR DRIVER): SCHEMATIC DIAGRAM - 4
VR: MAIN (VREG FAN): SCHEMATIC DIAGRAM - 5 ~ 6
TU: MAIN (TUNER AUX): SCHEMATIC DIAGRAM - 7
IO: MAIN (IO EXPANSION): SCHEMATIC DIAGRAM - 8
MI: MAIN (MICON): SCHEMATIC DIAGRAM - 9 ~ 10
US: MAIN (USB): SCHEMATIC DIAGRAM - 10

SA-MAX5000PN/PS MAIN (TUNER AUX) CIRCUIT

12.9. Main (IO Expansion) Circuit

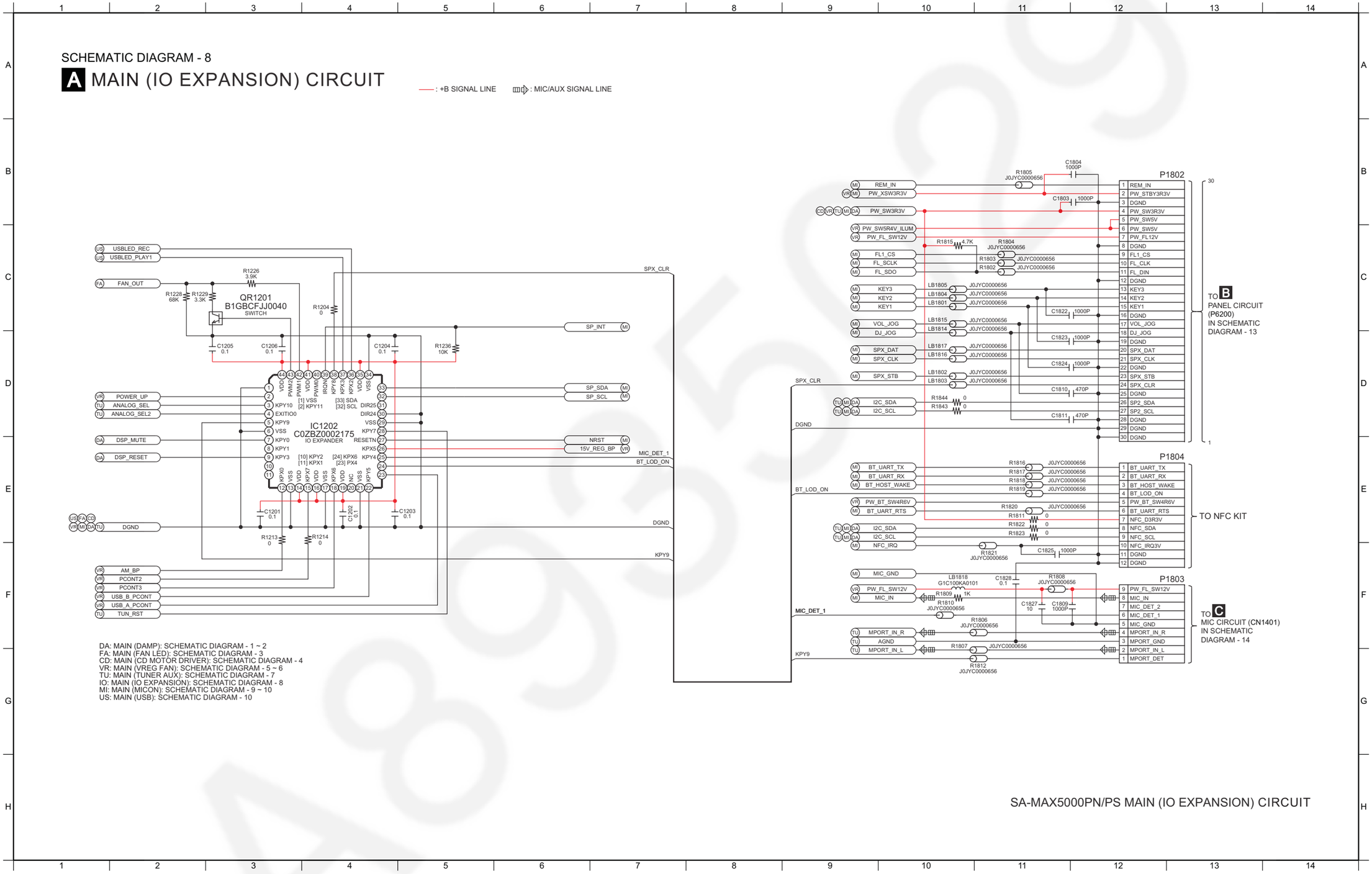

12.10. Main (MICON) Circuit (1/2)

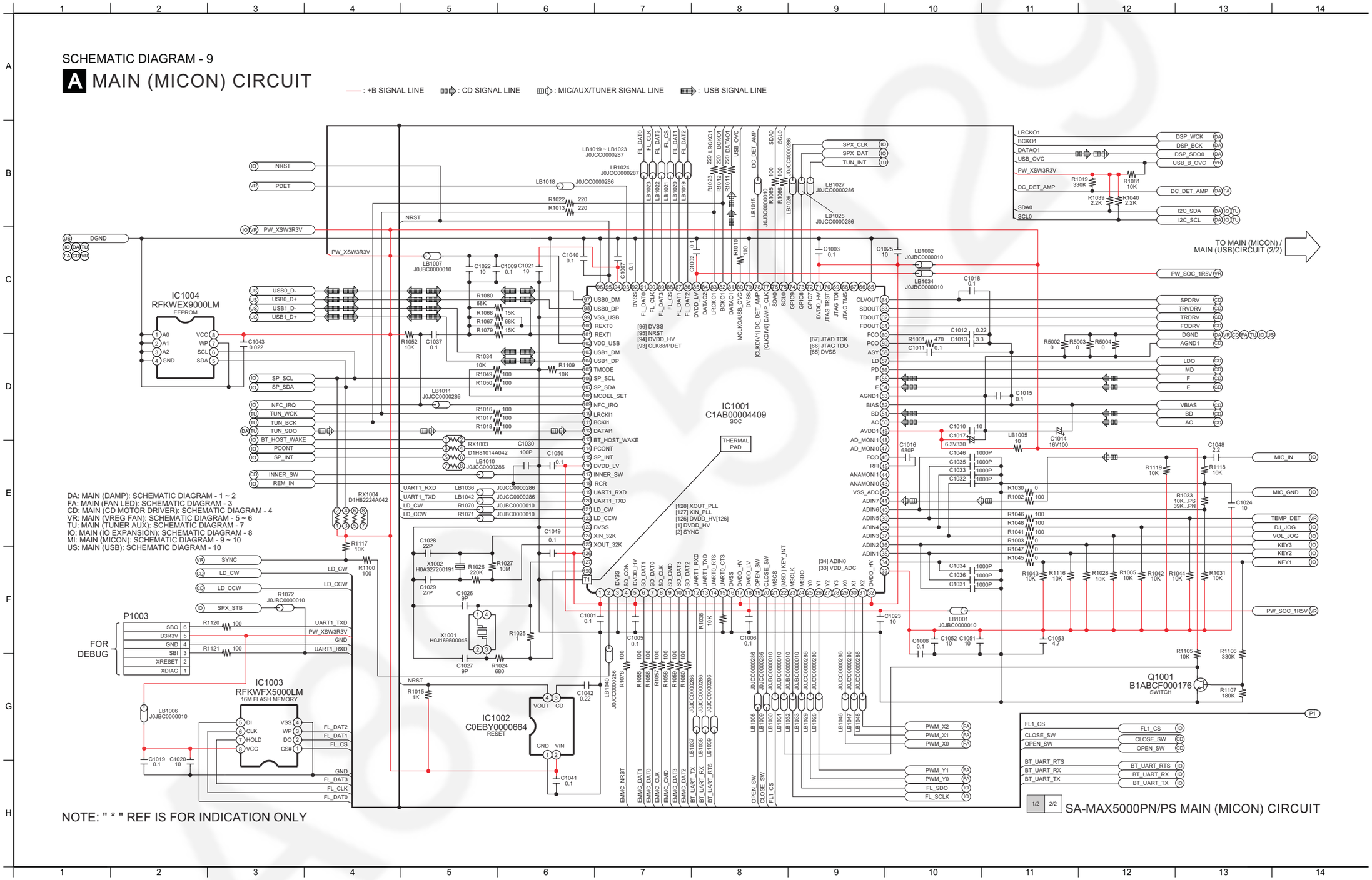

12.11. Main (MICON) Circuit (2/2)

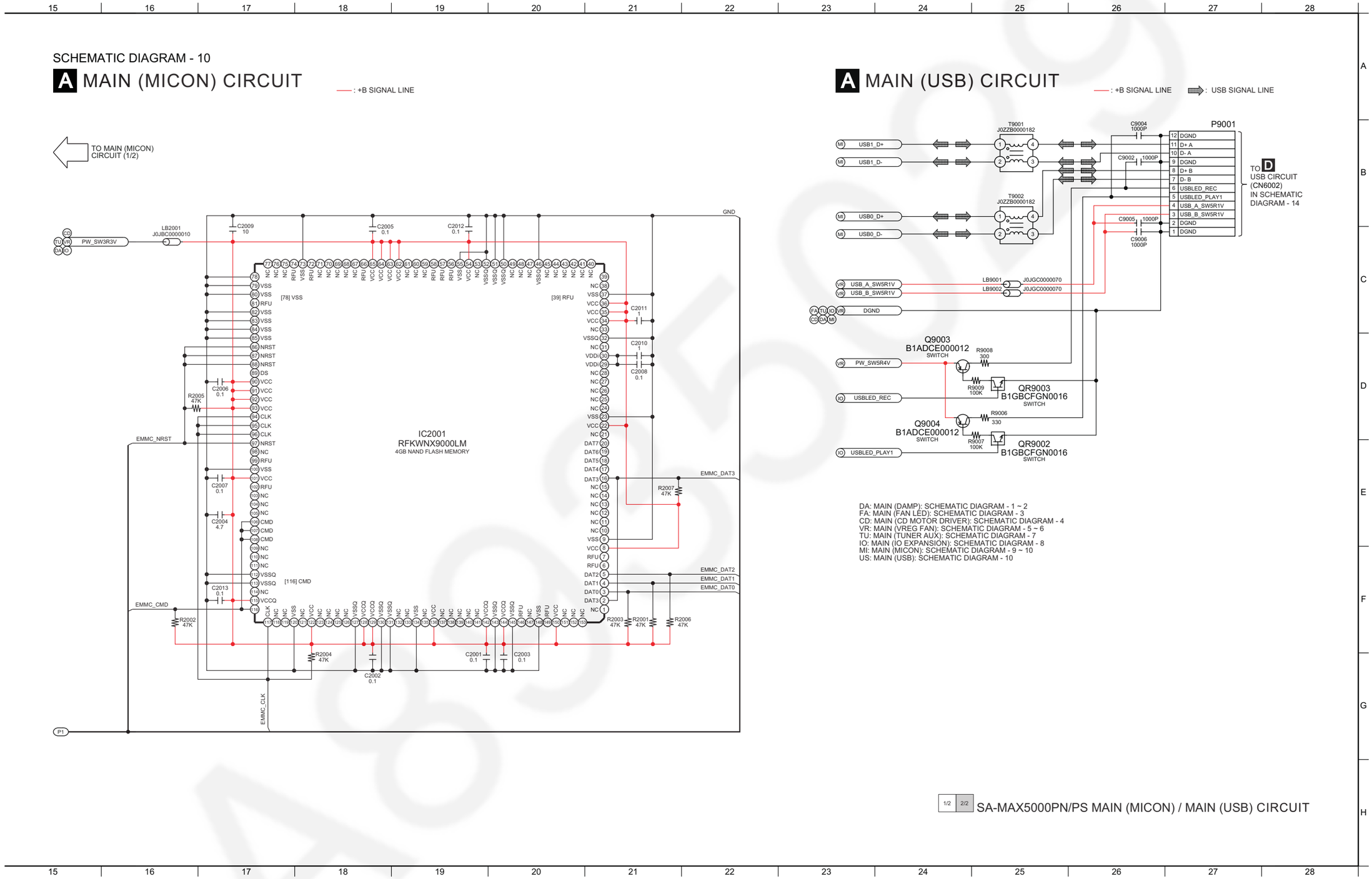

12.12. Panel Circuit (1/3)

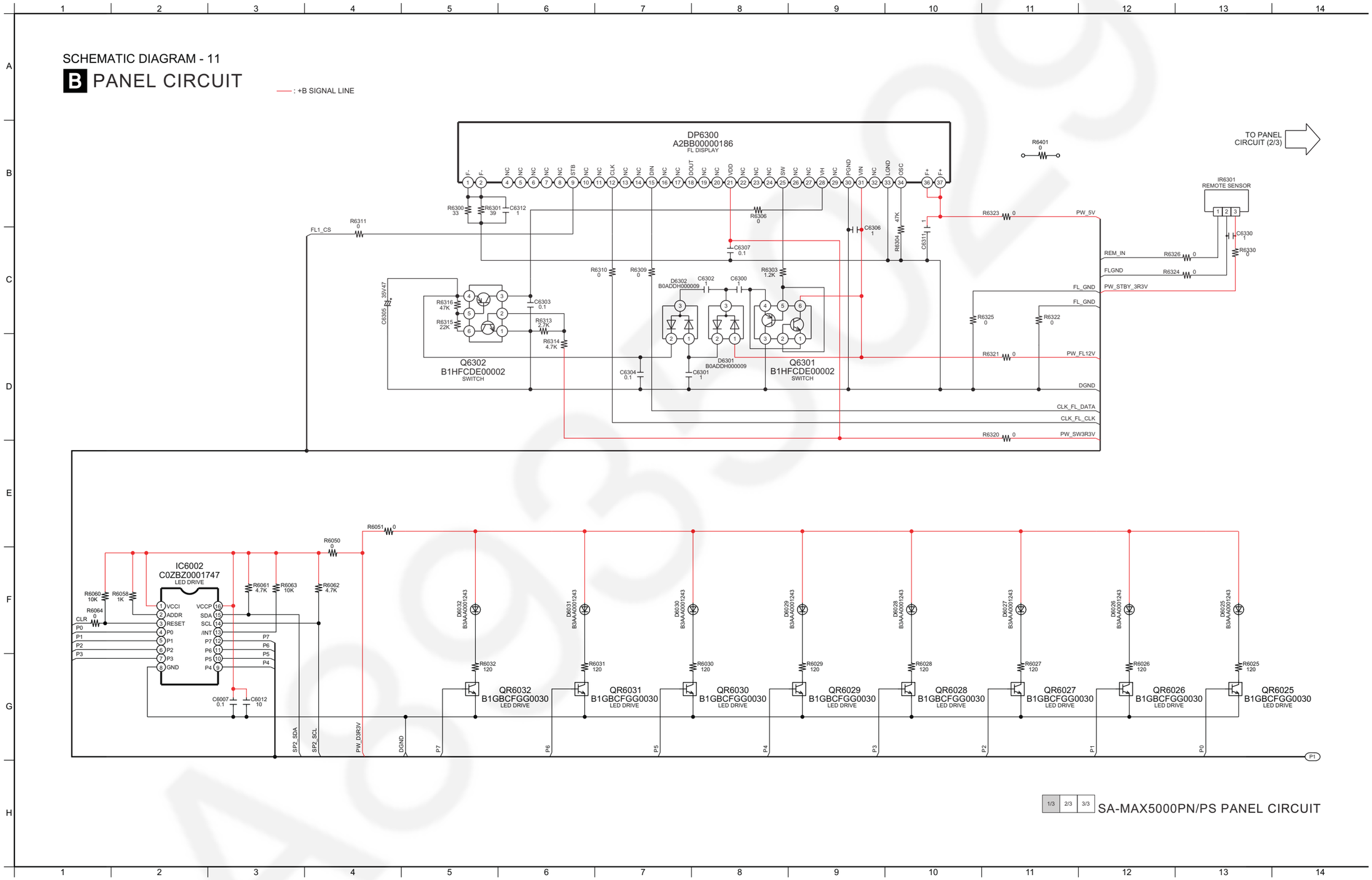

12.13. Panel Circuit (2/3)

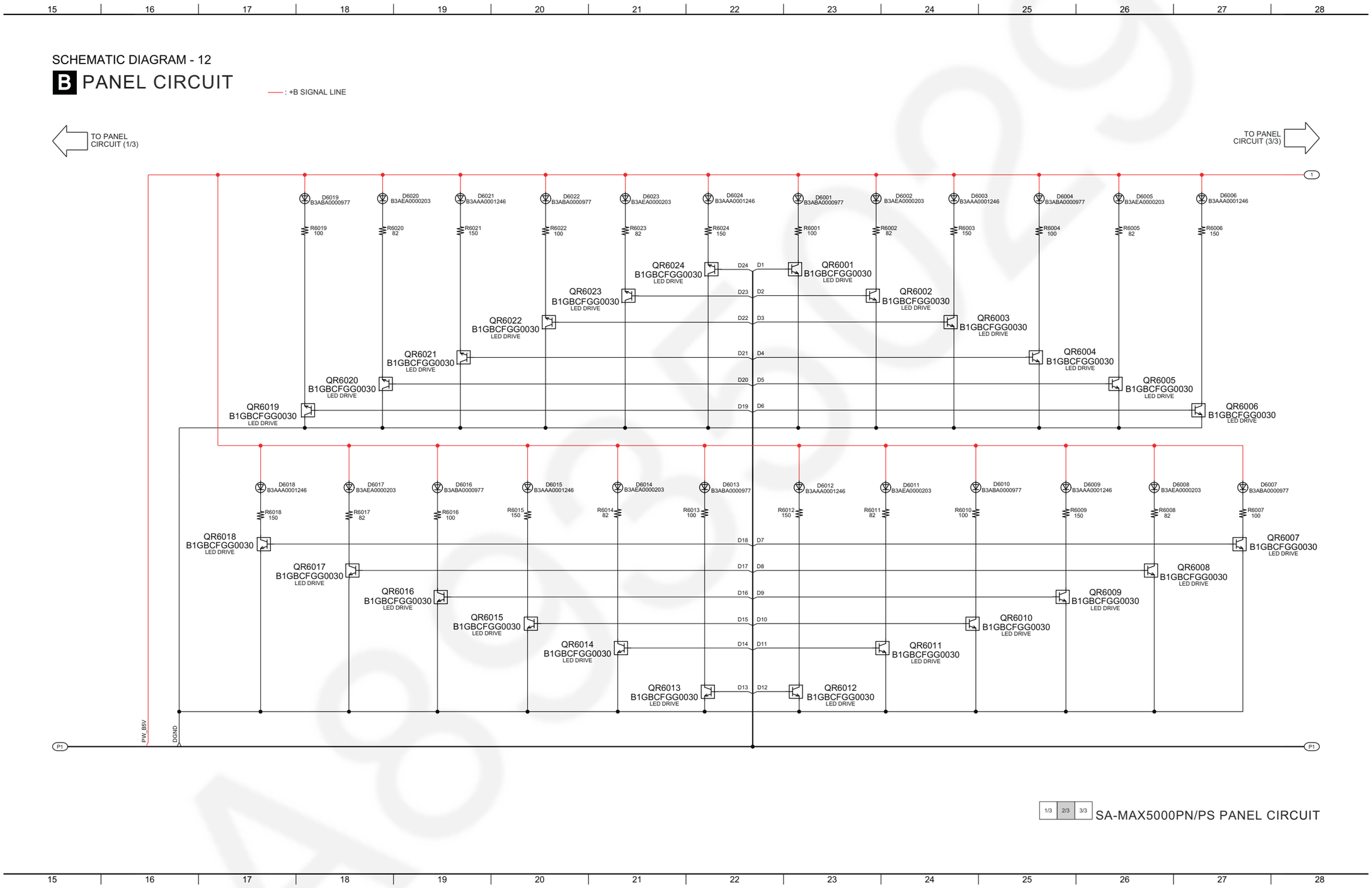

12.14. Panel Circuit (3/3)

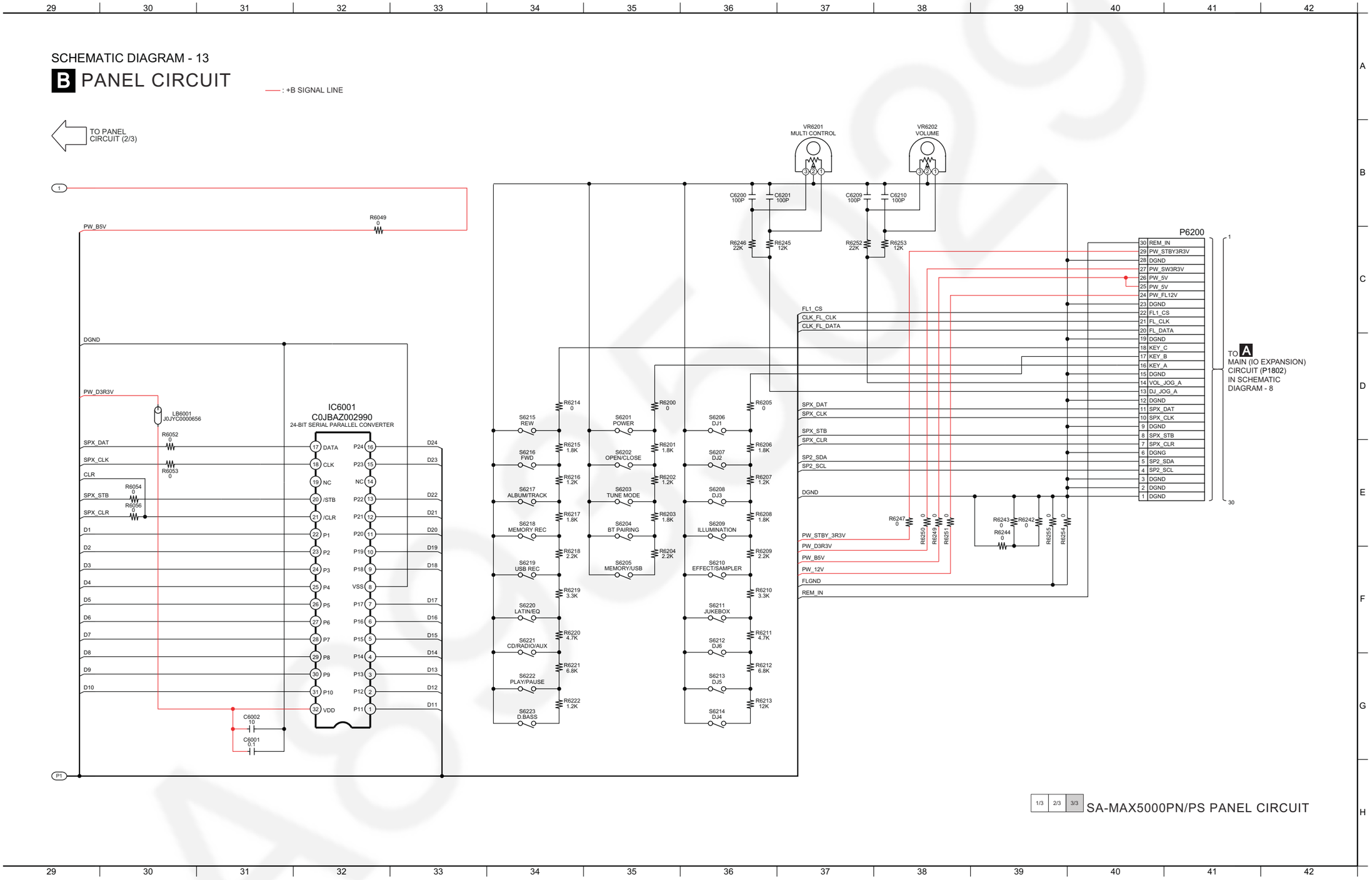

12.15. Mic, USB and CD Interface Circuit

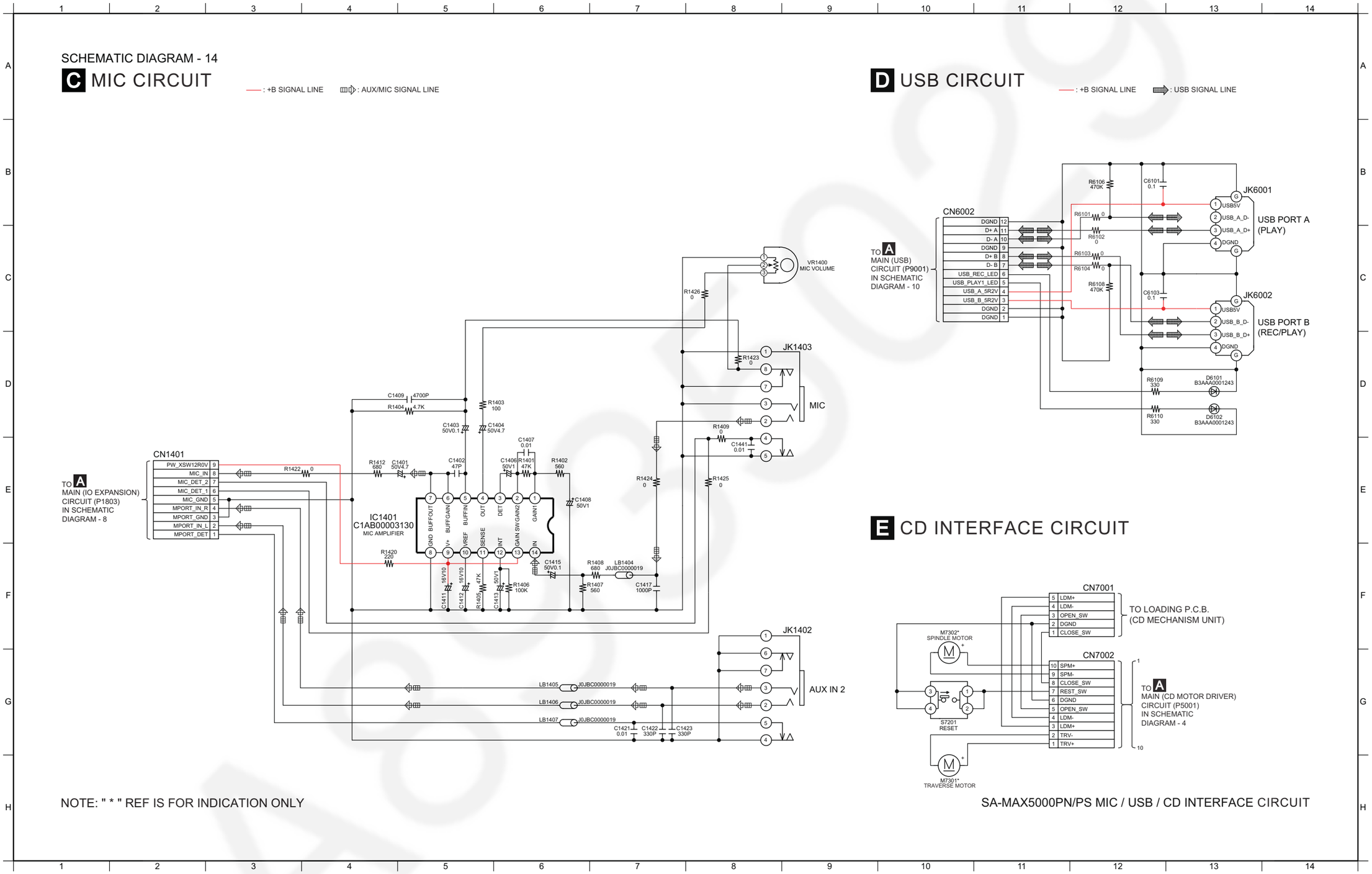

12.16. SMPS Circuit (1/2)

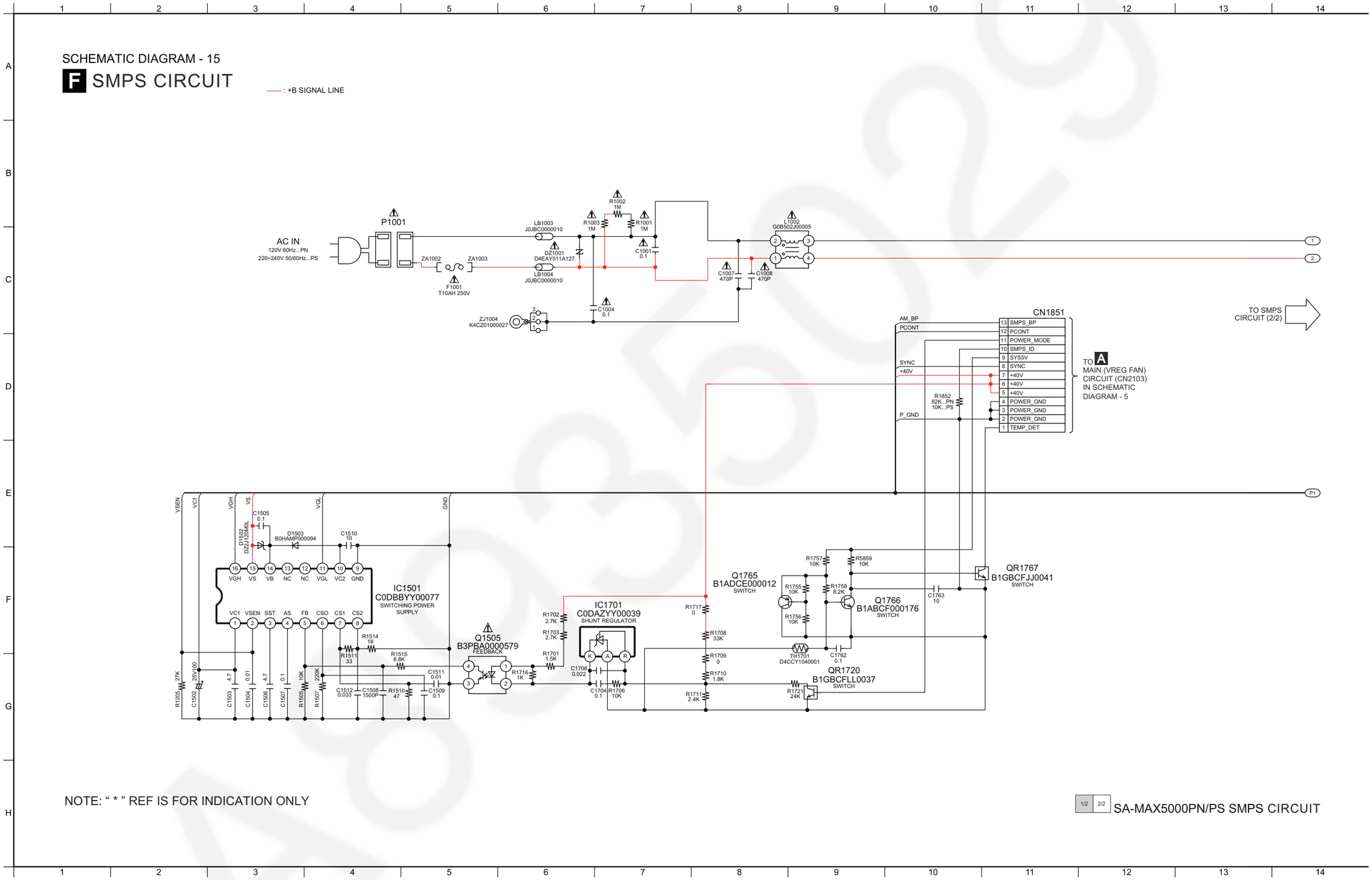

12.17. SMPS Circuit (2/2)

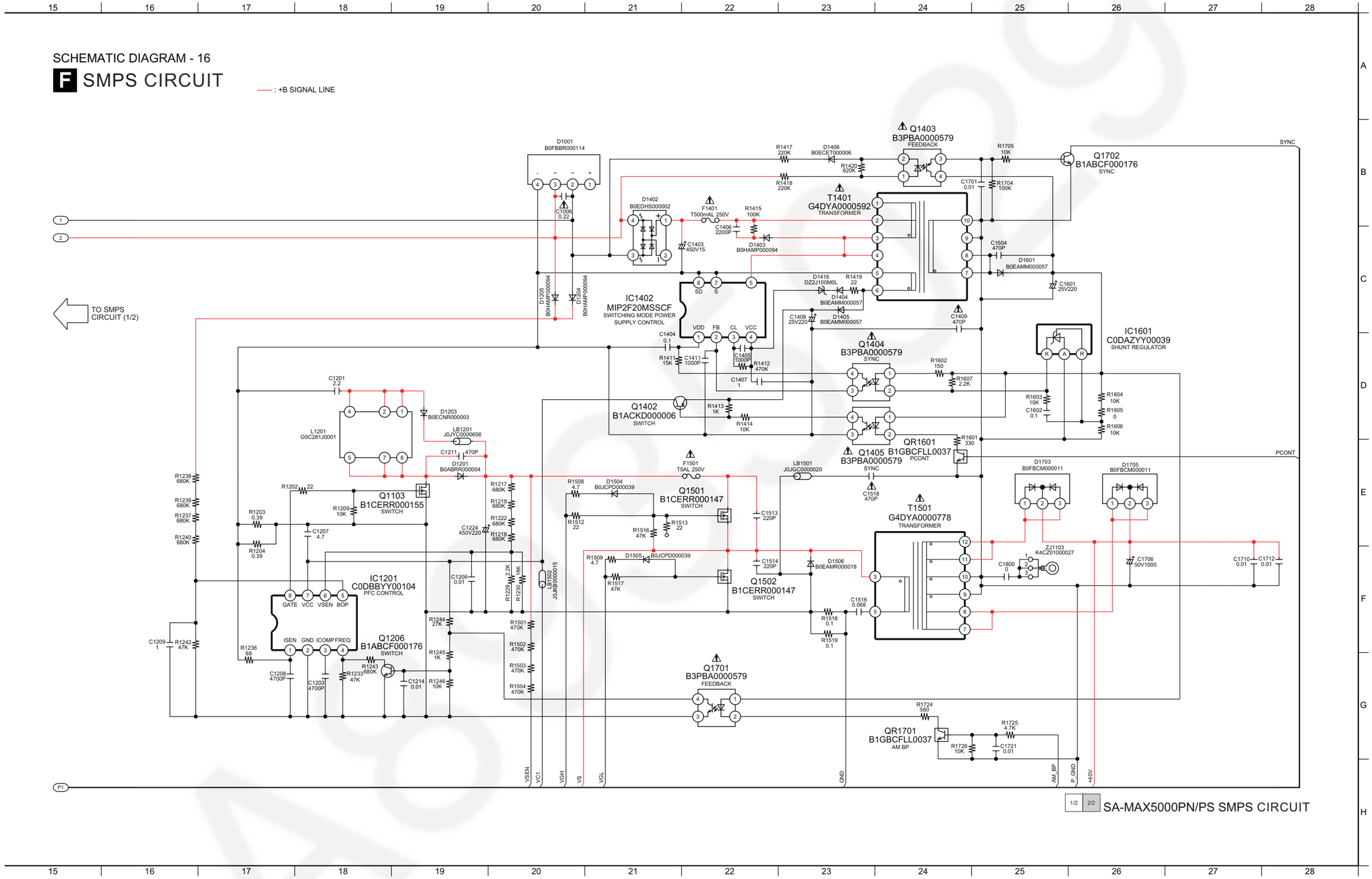

13 Printed Circuit Board

13.1. Main P.C.B. (Side A)

A MAIN P.C.B. (RFKV5318BA...PS)
(RFKV5318AA...PN)

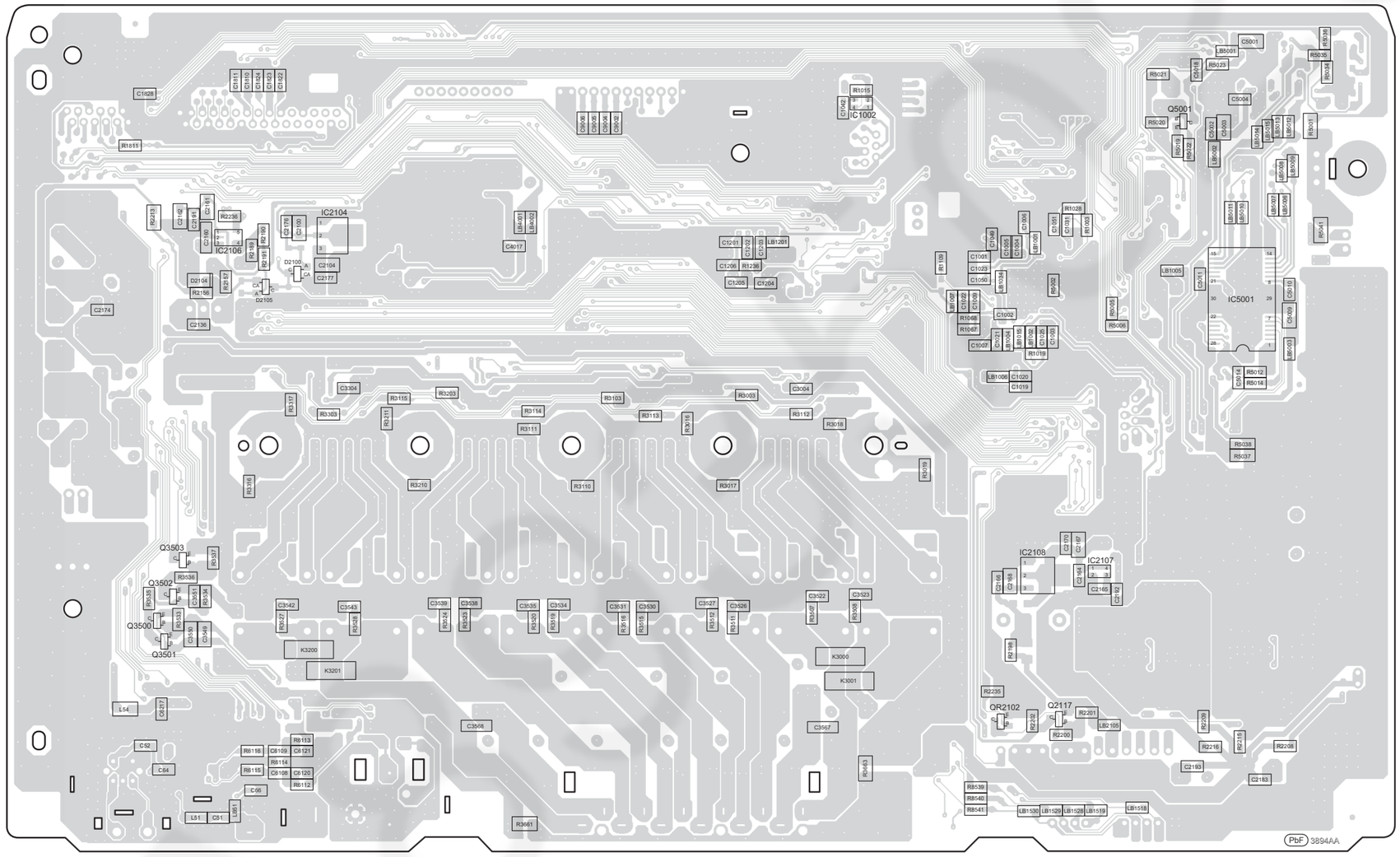

(SIDE A)

SA-MAX5000PN/PS
MAIN P.C.B.

13.2. Main P.C.B. (Side B)

A MAIN P.C.B. (RFKV5318BA...PS)
(RFKV5318AA...PN)

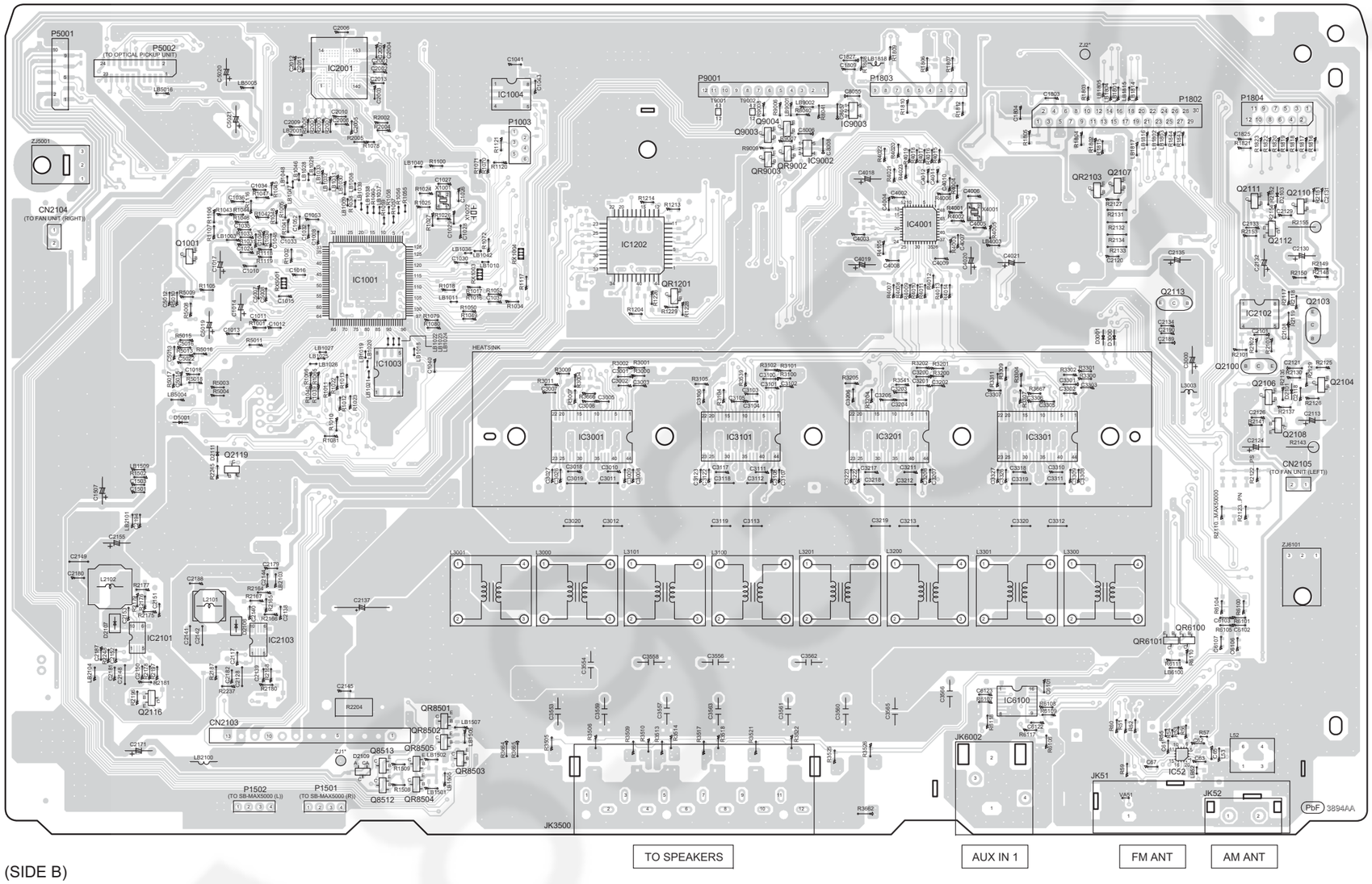

(SIDE B)

NOTE: " * " REF IS FOR INDICATION ONLY

SA-MAX5000PN/PS
MAIN P.C.B.

13.3. Panel, Mic and USB P.C.B.

B PANEL P.C.B. (REP5316AA)

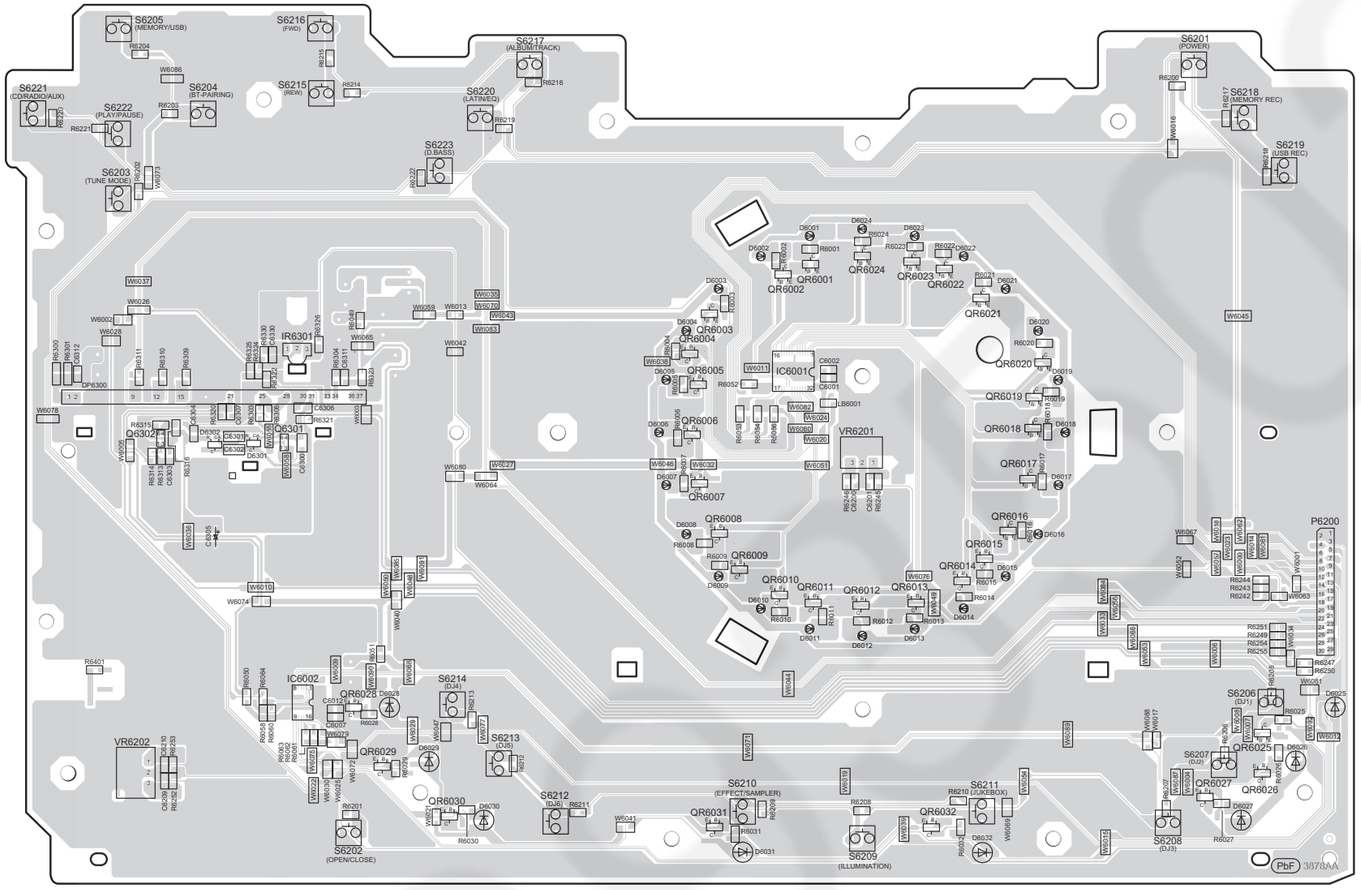

VOLUME

SENSOR

MULTI CONTROL

C MIC P.C.B. (REP5316AB)

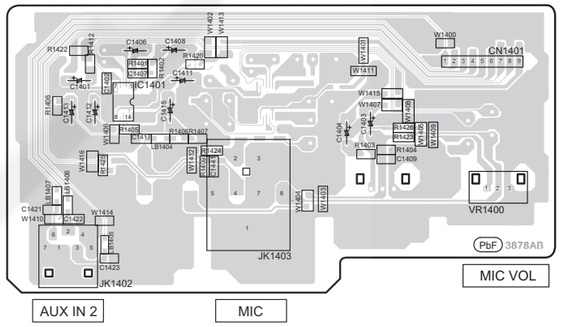

AUX IN 2

MIC

MIC VOL

D USB P.C.B. (REP5316AC)

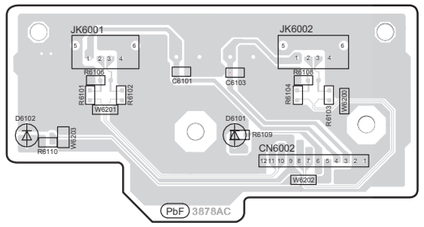

SA-MAX5000PN/PS
PANEL / MIC / USB P.C.B.

13.4. SMPS and CD Interface P.C.B.

F SMPS P.C.B. (REP5304E)

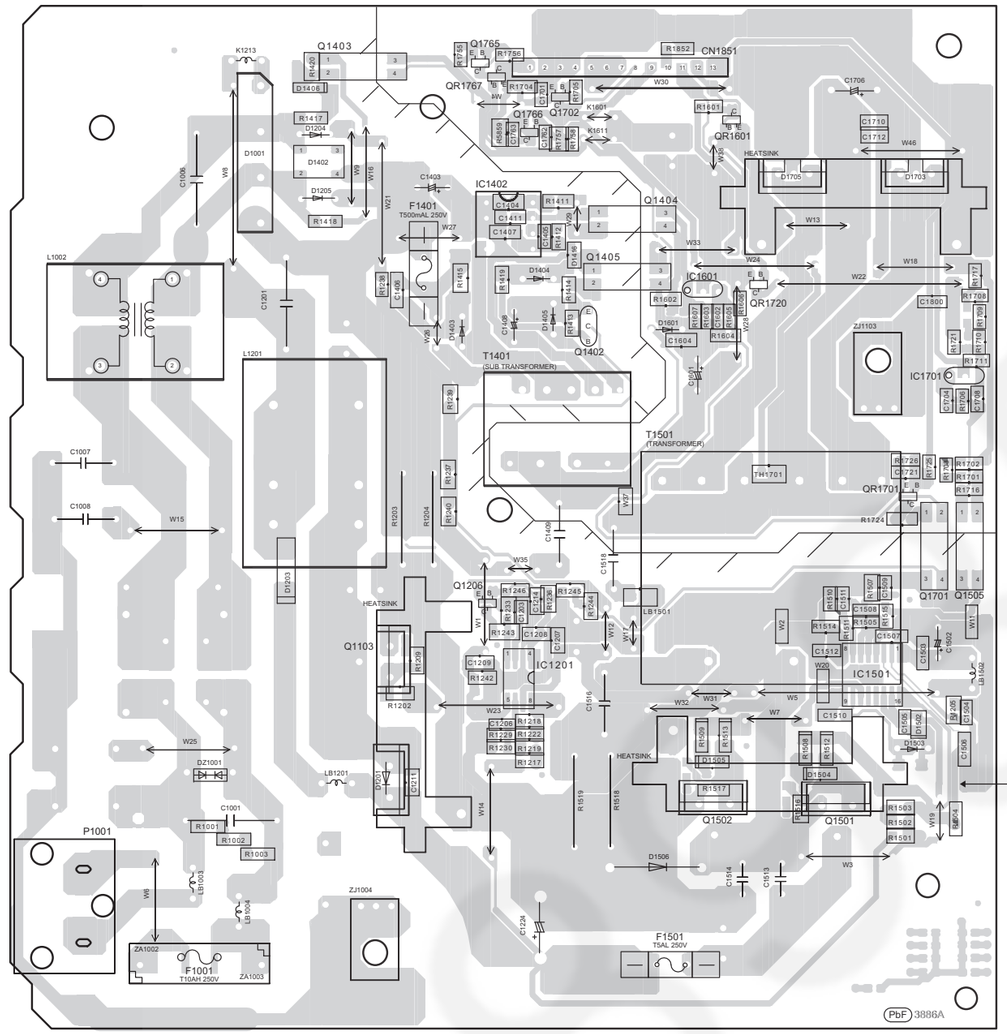

CAUTION
RISK OF ELECTRIC SHOCK
AC VOLTAGE LINE.
PLEASE DO NOT TOUCH THIS P.C.B

AC IN ~
120V 60Hz...PN
220~240V 50/60Hz...PS

NOTE: " * " REF IS FOR INDICATION ONLY

E CD INTERFACE P.C.B. (REP4945B)

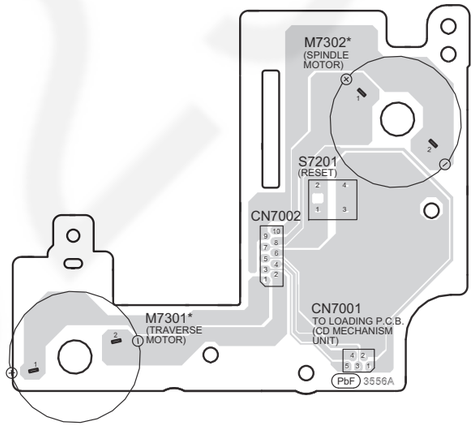

SA-MAX5000PN/PS
SMPS / CD INTERFACE P.C.B.

14 Voltage and Waveform Measurement

14.1. Voltage Measurement

Note:

- Indication Voltage Values are in standard values for the unit measured by the DC electronic circuit tester (high-impedance) with the chassis taken as standard.
  Therefore, there may exist some errors in voltage values, depending on the internal impedance of the DC circuit tester.
- Circuit voltage and waveform described herein shall be regarded as reference information when probing defect point because it may differ from actual measuring value due to difference of Measuring instrument and its measuring condition and product itself.

14.1.1. Main P.C.B. (1/4)

REF NO.	IC1001																			
MODE	1	2	3	4	5	6	7	8	9	10	11	12	13	14	15	16	17	18	19	20
PLAY	3.3	3	3.3	3.3	3.3	3.3	1.6	3.3	3.3	3.3	3.3	0	0	3.3	3.3	0	3.3	1.6	0	0
STANDBY	3.3	3	3.3	3.3	3.3	3.3	1.6	3.3	3.3	3.3	3.3	0	0	3.3	3.3	0	3.3	1.6	0	0

REF NO.	IC1001																			
MODE	21	22	23	24	25	26	27	28	29	30	31	32	33	34	35	36	37	38	39	40
PLAY	3	3.3	0.2	2.9	3.3	3.3	0	0	3.3	0	3.3	0	1.6	1.1	1	0.8	0.8	0.8	1.6	0.8
STANDBY	3	3.3	0.2	2.9	3.3	3.3	0	0	3.3	0	3.3	0	1.6	1.1	1	0.8	0.8	0.8	1.6	0.8

REF NO.	IC1001																			
MODE	41	42	43	44	45	46	47	48	49	50	51	52	53	54	55	56	57	58	59	60
PLAY	0.8	0	0	0	1.6	0.7	3.2	1.7	3.2	1.6	1.6	1.6	0	1.6	1.6	0	3.3	0	1.6	1.6
STANDBY	0.8	0	0	0	1.6	0.7	3.2	1.7	3.2	1.6	1.6	1.6	0	1.6	1.6	0	3.3	0	1.6	1.6

REF NO.	IC1001																			
MODE	61	62	63	64	65	66	67	68	69	70	71	72	73	74	75	76	77	78	79	80
PLAY	1.6	1.6	1.6	1.6	1.6	0	1.7	1.8	1.8	1.8	0	0	3.3	3.3	3.3	3.3	1.6	3.3	3.3	0
STANDBY	1.6	1.6	1.6	1.6	1.6	0	1.7	1.8	1.8	1.8	0	0	3.3	3.3	3.3	3.3	1.6	3.3	3.3	0

REF NO.	IC1001																			
MODE	81	82	83	84	85	86	87	88	89	90	91	92	93	94	95	96	97	98	99	100
PLAY	0.8	1.6	1.6	0.4	0	3.3	1.5	3.3	3.3	0	0	1.6	0	3.3	3.2	3.3	0.2	0.2	0	0.2
STANDBY	0.8	1.6	1.6	0.4	0	3.3	1.5	3.3	3.3	0	0	1.6	0	3.3	3.2	3.3	0.2	0.2	0	0.2

REF NO.	IC1001																			
MODE	101	102	103	104	105	106	107	108	109	110	111	112	113	114	115	116	117	118	119	120
PLAY	3.1	3.2	0	0.2	3.1	3.1	3.1	0	1.8	1.6	1.6	1.6	3.2	3.1	0	1.5	3.2	3.3	3.3	3.3
STANDBY	3.1	3.2	0	0.2	3.1	3.1	3.1	0	1.8	1.6	1.6	1.6	3.2	3.1	0	1.5	3.2	3.3	3.3	3.3

REF NO.	IC1001																			
MODE	121	122	123	124	125	126	127	128												
PLAY	1.6	3.2	0	1.1	1.5	1.5	1.4	1.5												
STANDBY	1.6	3.2	0	1.1	1.5	1.5	1.4	1.5												

REF NO.	IC1002																			
MODE	1	2	3	4																
PLAY	0	3.3	3.3	3.3																
STANDBY	0	3.3	3.3	3.3																

REF NO.	IC1202																			
MODE	1	2	3	4	5	6	7	8	9	10	11	12	13	14	15	16	17	18	19	20
PLAY	0	0	0	0	3.3	0	3.3	0	3.3	3.2	0	3.2	0	3.3	0	3.3	0	3.3	3.3	0
STANDBY	0	0	0	0	3.3	0	3.3	0	3.3	3.2	0	3.2	0	3.3	0	3.3	0	3.3	3.3	0

REF NO.	IC1202																			
MODE	21	22	23	24	25	26	27	28	29	30	31	32	33	34	35	36	37	38	39	40
PLAY	0	0	0	3.3	3.2	3.2	3.3	3.3	0	0	0	3.3	3.3	0	3.3	0	0	0	0	0
STANDBY	0	0	0	3.3	3.2	3.2	3.3	3.3	0	0	0	3.3	3.3	0	3.3	0	0	0	0	0

SA-MAX5000PN/PS MAIN P.C.B.

14.1.2. Main P.C.B. (2/4)

REF NO.	IC1202																			
MODE	41	42	43	44																
PLAY	3.3	3.3	0	3.3																
STANDBY	3.3	3.3	0	3.3																

REF NO.	IC2101																			
MODE	1	2	3	4	5	6	7	8	9	10										
PLAY	10.9	39.5	3.1	2.1	0.5	0	0.8	0.7	0	4.7										
STANDBY	10.9	39.5	3.1	2.1	0.5	0	0.8	0.7	0	4.7										

REF NO.	IC2102																			
MODE	1	2	3	4	5	6	7	8												
PLAY	8.6	1.6	1.6	0	1.6	1.6	8.6	15.3												
STANDBY	8.6	1.6	1.6	0	1.6	1.6	8.6	15.3												

REF NO.	IC2103																			
MODE	1	2	3	4	5	6	7	8	9	10										
PLAY	21.3	39.5	3.1	2.1	0.5	0	0.8	0.7	0	15.2										
STANDBY	21.3	39.5	3.1	2.1	0.5	0	0.8	0.7	0	15.2										

REF NO.	IC2104																			
MODE	1	2	3																	
PLAY	0	3.3	5.5																	
STANDBY	0	3.3	5.5																	

REF NO.	IC2106																			
MODE	1	2	3	4	5															
PLAY	12	0	15.3	2.5	3.2															
STANDBY	12	0	15.3	2.5	3.2															

REF NO.	IC2107																			
MODE	1	2	3	4																
PLAY	3.3	0	1.6	3.3																
STANDBY	3.3	0	1.6	3.3																

REF NO.	IC2108																			
MODE	1	2	3																	
PLAY	0	3.3	5																	
STANDBY	0	3.3	5																	

REF NO.	IC3001																			
MODE	1	2	3	4	5	6	7	8	9	10	11	12	13	14	15	16	17	18	19	20
PLAY	12.2	12.1	1.2	0	1.7	1.7	3.3	0	0	0	0	0	7.8	3.3	0	3.3	3.3	0	0	0
STANDBY	12.2	12.1	1.2	0	1.7	1.7	3.3	0	0	0	0	0	7.8	3.3	0	3.3	3.3	0	0	0

REF NO.	IC3001																			
MODE	21	22	23	24	25	26	27	28	29	30	31	32	33	34	35	36	37	38	39	40
PLAY	3.3	12	30.1	30.1	0	0	19	19	39.5	39.5	39.5	19	0	0	19	39.5	39.5	39.5	19	19
STANDBY	3.3	12	30.1	30.1	0	0	19	19	39.5	39.5	39.5	19	0	0	19	39.5	39.5	39.5	19	19

REF NO.	IC3001																			
MODE	41	42	43	44																
PLAY	0	0	30.1	30																
STANDBY	0	0	30.1	30																

REF NO.	IC3101																			
MODE	1	2	3	4	5	6	7	8	9	10	11	12	13	14	15	16	17	18	19	20
PLAY	12	12	1.1	3.3	1.7	1.7	3.3	3.3	0	0	0	0	7.7	1.7	1.7	3.3	3.3	3.3	0	3.3
STANDBY	12	12	1.1	3.3	1.7	1.7	3.3	3.3	0	0	0	0	7.7	1.7	1.7	3.3	3.3	3.3	0	3.3

SA-MAX5000PN/PS MAIN P.C.B.

14.1.3. Main P.C.B. (3/4)

REF NO.	IC3101																			
MODE	21	22	23	24	25	26	27	28	29	30	31	32	33	34	35	36	37	38	39	40
PLAY	0	12	30	30	0	0	19.1	19.1	39.5	39.5	39.5	19.1	0	0	19.1	39.5	39.5	39.5	19.1	19.4
STANDBY	0	12	30	30	0	0	19.1	19.1	39.5	39.5	39.5	19.1	0	0	19.1	39.5	39.5	39.5	19.1	19.4

REF NO.	IC3101																			
MODE	41	42	43	44																
PLAY	0	0	30	30																
STANDBY	0	0	30	30																

REF NO.	IC3201																			
MODE	1	2	3	4	5	6	7	8	9	10	11	12	13	14	15	16	17	18	19	20
PLAY	12	12	1.1	3.3	1.7	1.7	3.3	3.3	0	0	0	0	7.7	1.7	1.7	3.3	3.3	3.3	0	3.3
STANDBY	12	12	1.1	3.3	1.7	1.7	3.3	3.3	0	0	0	0	7.7	1.7	1.7	3.3	3.3	3.3	0	3.3

REF NO.	IC3201																			
MODE	21	22	23	24	25	26	27	28	29	30	31	32	33	34	35	36	37	38	39	40
PLAY	0	12	30	30	0	0	19.1	19.1	39.5	39.5	39.5	19.1	0	0	19.1	39.5	39.5	39.5	19.1	19.4
STANDBY	0	12	30	30	0	0	19.1	19.1	39.5	39.5	39.5	19.1	0	0	19.1	39.5	39.5	39.5	19.1	19.4

REF NO.	IC3201																			
MODE	41	42	43	44																
PLAY	0	0	30	30																
STANDBY	0	0	30	30																

REF NO.	IC3301																			
MODE	1	2	3	4	5	6	7	8	9	10	11	12	13	14	15	16	17	18	19	20
PLAY	12.2	12.1	1.2	0	1.7	1.7	3.3	0	0	0	0	0	7.8	3.3	0	3.3	3.3	0	0	0
STANDBY	12.2	12.1	1.2	0	1.7	1.7	3.3	0	0	0	0	0	7.8	3.3	0	3.3	3.3	0	0	0

REF NO.	IC3301																			
MODE	21	22	23	24	25	26	27	28	29	30	31	32	33	34	35	36	37	38	39	40
PLAY	3.3	12	30.1	30.1	0	0	19	19	39.5	39.5	39.5	19	0	0	19	39.5	39.5	39.5	19	19
STANDBY	3.3	12	30.1	30.1	0	0	19	19	39.5	39.5	39.5	19	0	0	19	39.5	39.5	39.5	19	19

REF NO.	IC3301																			
MODE	41	42	43	44																
PLAY	0	0	30.1	30																
STANDBY	0	0	30.1	30																

REF NO.	IC4001																			
MODE	1	2	3	4	5	6	7	8	9	10	11	12	13	14	15	16	17	18	19	20
PLAY	3.3	3.3	3.3	3.3	3.3	1.3	0	0.8	1.7	1.6	3.3	0	1.5	1.5	0	0	1.3	0	1.7	1.7
STANDBY	3.3	3.3	3.3	3.3	3.3	1.3	0	0.8	1.7	1.6	3.3	0	1.5	1.5	0	0	1.3	0	1.7	1.7

REF NO.	IC4001																			
MODE	21	22	23	24	25	26	27	28	29	30	31	32	33	34	35	36	37	38	39	40
PLAY	3.3	0	1.5	3.3	0	3.3	1.7	1.7	1.7	1.7	1.7	1.7	1.7	1.7	3.3	0	0	0	0	3.3
STANDBY	3.3	0	1.5	3.3	0	3.3	1.7	1.7	1.7	1.7	1.7	1.7	1.7	1.7	3.3	0	0	0	0	3.3

REF NO.	IC4001																			
MODE	41	42	43	44	45	46	47	48												
PLAY	0	1.4	0	0	3.3	0	0	0												
STANDBY	0	1.4	0	0	3.3	0	0	0												

REF NO.	IC5001																			
MODE	1	2	3	4	5	6	7	8	9	10	11	12	13	14	15	16	17	18	19	20
PLAY	1.6	5.5	0	1.6	2.9	0	0	5.6	0	0	2.9	2.8	2.8	2.9	2.9	2.9	3.3	2.4	5.5	2.2
STANDBY	1.6	5.5	0	1.6	2.9	0	0	5.6	0	0	2.9	2.8	2.8	2.9	2.9	2.9	3.3	2.4	5.5	2.2

SA-MAX5000PN/PS MAIN P.C.B.

14.1.4. Main P.C.B. (4/4)

REF NO.	IC5001																			
MODE	21	22	23	24	25	26	27	28	29	30										
PLAY	1.5	0	1.8	5.5	5.5	1.6	1.6	3.3	0	0										
STANDBY	1.5	0	1.8	5.5	5.5	1.6	1.6	3.3	0	0										

REF NO.	IC9002																			
MODE	1	2	3	4	5															
PLAY	0	0	3.3	0	5.1															
STANDBY	0	0	3.3	0	5.1															

REF NO.	IC9003																			
MODE	1	2	3	4	5															
PLAY	5.1	0	3.3	3.3	5.1															
STANDBY	5.1	0	3.3	3.3	5.1															

REF NO.	Q1001				Q1002				Q2100				Q2103				Q2104			
MODE	E	C	B		E	C	B		E	C	B		E	C	B		E	C	B	
PLAY	0	0	0.6		0	0	23.9		7.9	15.3	8.5		7.8	15.3	8.4		0.2	11.1	0.2	
STANDBY	0	0	0.6		0	0	23.9		7.9	15.3	8.5		7.8	15.3	8.4		0.2	11.1	0.2	

REF NO.	Q2106				Q2107				Q2108				Q2110				Q2111			
MODE	E	C	B		E	C	B		E	C	B		E	C	B		E	C	B	
PLAY	0	0	0.7		5.2	0	5.2		0	3.2	0		0.4	5.1	1		0	0	0.3	
STANDBY	0	0	0.7		5.2	0	5.2		0	3.2	0		0.4	5.1	1		0	0	0.3	

REF NO.	Q2112				Q2113				Q2116				Q2117				Q2119			
MODE	E	C	B		E	C	B		E	C	B		E	C	B		E	C	B	
PLAY	0	3.2	0		12.5	15.3	13.1		0	0.4	0		5	5	4.3		0	3.3	0	
STANDBY	0	3.2	0		12.5	15.3	13.1		0	0.4	0		5	5	4.3		0	3.3	0	

REF NO.	Q3500				Q3501				Q3502				Q3503				Q5001			
MODE	E	C	B		E	C	B		E	C	B		E	C	B		E	C	B	
PLAY	19.7	39	19.7		19.7	39	19.7		39.5	0	39.4		0	3.2	0		2.9	1.9	2.2	
STANDBY	19.7	39	19.7		19.7	39	19.7		39.5	0	39.4		0	3.2	0		2.9	1.9	2.2	

REF NO.	Q8512				Q8513				Q9003				Q9004				QR1201			
MODE	E	C	B		E	C	B		E	C	B		E	C	B		E	C	B	
PLAY	5.2	4.6	3.9		5.2	4.6	3.9		5.5	0	5.1		5.5	0	5.1		0	0	3.3	
STANDBY	5.2	4.6	3.9		5.2	4.6	3.9		5.5	0	5.1		5.5	0	5.1		0	0	3.3	

REF NO.	QR2102				QR2103				QR6100				QR6101				QR8501			
MODE	E	C	B		E	C	B		E	C	B		E	C	B		E	C	B	
PLAY	0	0	3.1		0	3.3	0		0	12.5	0		0	12.5	0		0	0.1	3.2	
STANDBY	0	0	3.1		0	3.3	0		0	12.5	0		0	12.5	0		0	0.1	3.2	

REF NO.	QR8502				QR8503				QR8504				QR8505				QR9002			
MODE	E	C	B		E	C	B		E	C	B		E	C	B		E	C	B	
PLAY	0	0	2.1		0	0.1	3.2		0	4.0	0.8		0	4.0	0.8		0	5	0	
STANDBY	0	0	2.1		0	0.1	3.2		0	4.0	0.8		0	4.0	0.8		0	5	0	

REF NO.	QR9003																			
MODE	E	C	B																	
PLAY	0	5	0																	
STANDBY	0	5	0																	

SA-MAX5000PN/PS MAIN P.C.B.

14.1.5. SMPS P.C.B.

REF NO.	IC1201																			
MODE	1	2	3	4	5	6	7	8												
PLAY	0	0	0	0	0	196.8	17.6	0												
STANDBY	0	0	0	0	0	196.8	17.6	0												

REF NO.	IC1402																			
MODE	1	2	3	4	5	6	7	8												
PLAY	6	1	2.4	17.4	324	-	0	0												
STANDBY	6	1	2.4	17.4	324	-	0	0												

REF NO.	IC1501																			
MODE	1	2	3	4	5	6	7	8	9	10	11	12	13	14	15	16				
PLAY	17.6	5.5	2.2	2.5	4.2	0.9	0	0	0	10.2	4.4	0	0	206.4	196.7	204.8				
STANDBY	17.6	5.5	2.2	2.5	4.2	0.9	0	0	0	10.2	4.4	0	0	206.4	196.7	204.8				

REF NO.	IC1601																			
MODE	K	A	R																	
PLAY	2.3	0	2.4																	
STANDBY	2.3	0	2.4																	

REF NO.	IC1701																			
MODE	K	A	R																	
PLAY	-28	-40.1	-36.9																	
STANDBY	-28	-40.1	-36.9																	

from MAX9000 Q1201

REF NO.	Q1103				Q1206				Q1402				Q1403							
MODE	E	C	B		E	C	B		E	C	B		1	2	3	4				
PLAY	196.8	196.8	0		0	0	17.6		17.6	17.6	16.9		0	0	0.3	0				
STANDBY	196.8	196.8	0		0	0	17.6		17.6	17.6	16.9		0	0	0.3	0				

REF NO.	Q1404					Q1405					Q1501				Q1502					
MODE	1	2	3	4		1	2	3	4		E	C	B		E	C	B			
PLAY	0	2.3	1.0	6.0		0	0.1	0	16.9		196.8	400	204		0	196.8	4.2			
STANDBY	0	2.3	1.0	6.0		0	0.1	0	16.9		196.8	400	204		0	196.8	4.2			

REF NO.	Q1505					Q1701					Q1702				Q1765					
MODE	1	2	3	4		1	2	3	4		E	C	B		E	C	B			
PLAY	-28.0	-28.0	0	4.2		0	0	0	17.6		0	1.7	0.3		5.0	-40.1	5.0			
STANDBY	-28.0	-28.0	0	4.2		0	0	0	17.6		0	1.7	0.3		5.0	-40.1	5.0			

REF NO.	Q1766				QR1601				QR1701				QR1720				QR1767			
MODE	E	C	B		E	C	B		E	C	B		E	C	B		E	C	B	
PLAY	0	1.7	0.3		0	0.1	3.1		0	0	3.2		-40.1	-36.9	0		-40.1	3.3	5.0	
STANDBY	0	1.7	0.3		0	0.1	3.1		0	0	3.2		-40.1	-36.9	0		-40.1	3.3	5.0	

SA-MAX5000PN/PS SMPS P.C.B.

A89350229

15 Exploded View and Replacement Parts List

15.1. Cabinet Parts Location 1

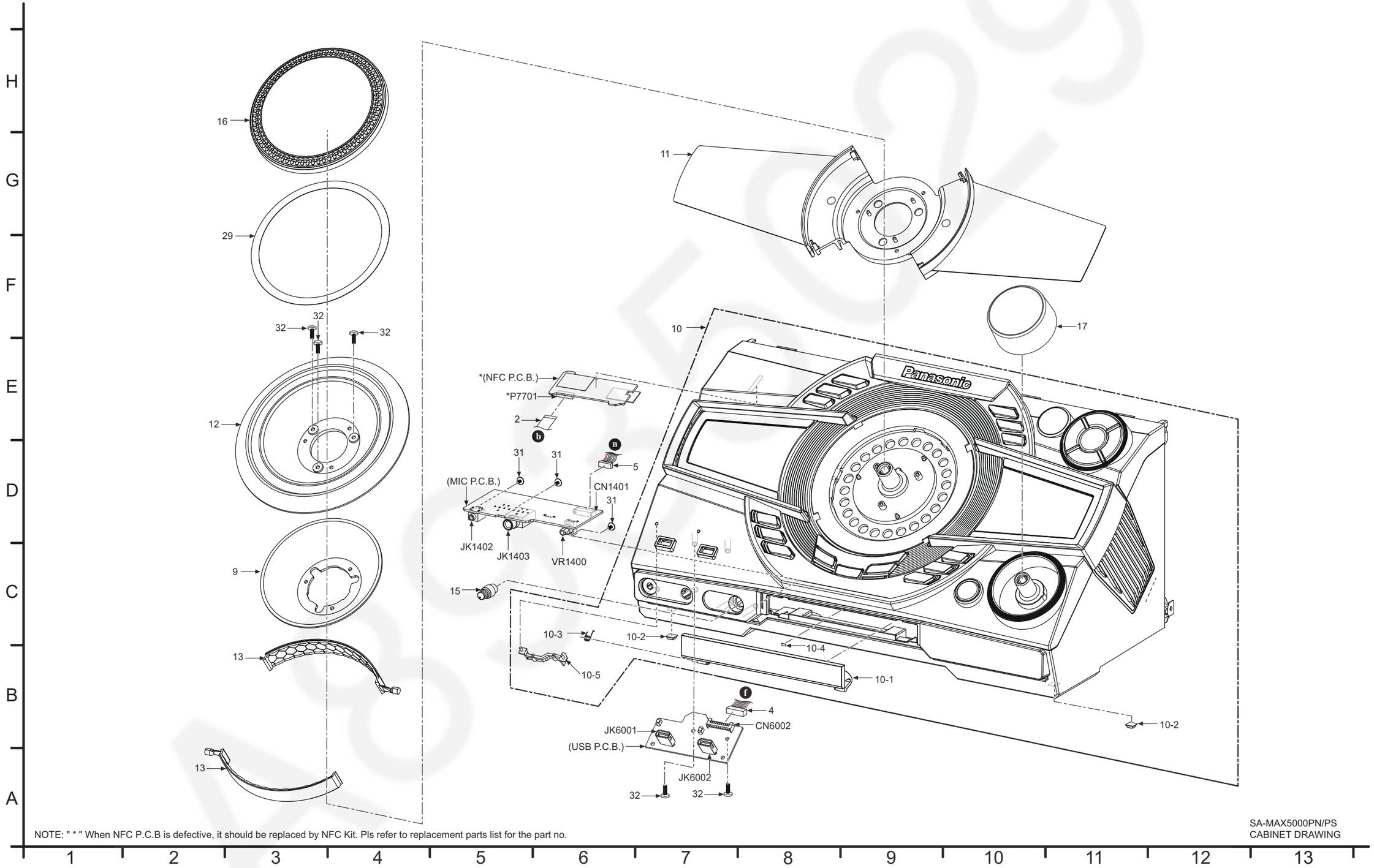

NOTE: " * " When NFC P.C.B is defective, it should be replaced by NFC Kit. Pls refer to replacement parts list for the part no.

SA-MAX5000PN/PS
CABINET DRAWING

15.2. Cabinet Parts Location 2

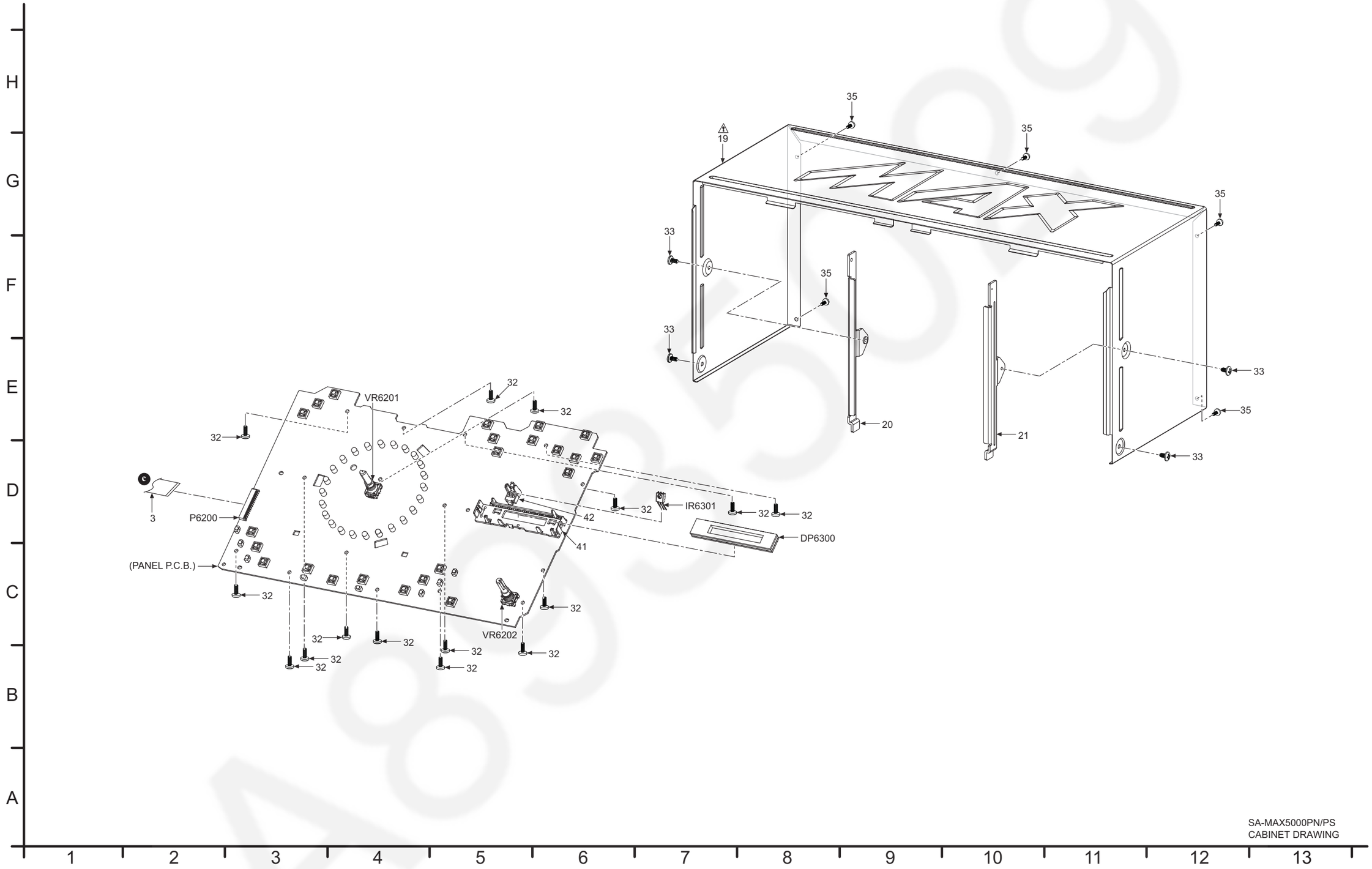

15.3. Cabinet Parts Location 3

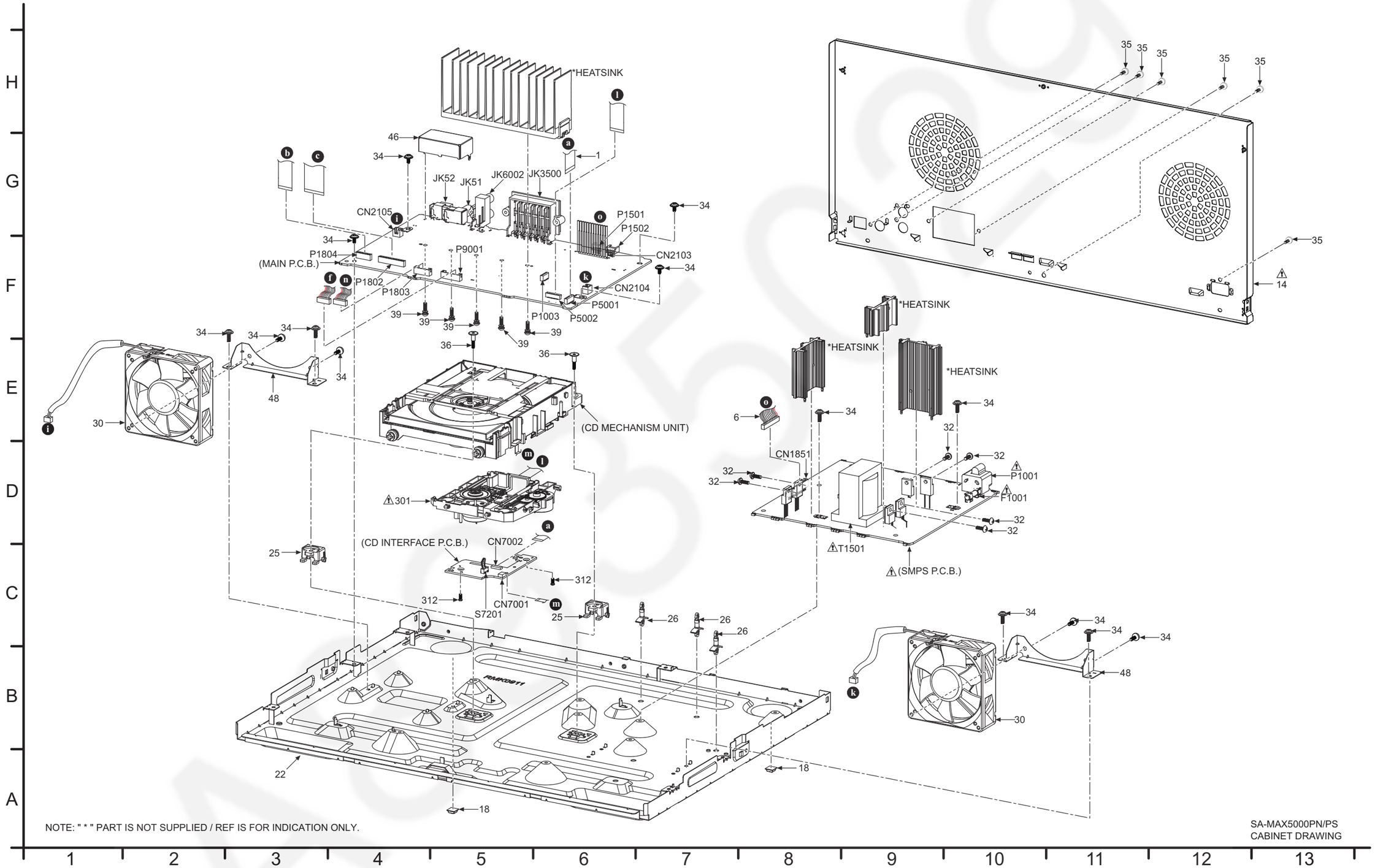

NOTE: " * " PART IS NOT SUPPLIED / REF IS FOR INDICATION ONLY.

SA-MAX5000PN/PS
CABINET DRAWING

15.4. Packaging

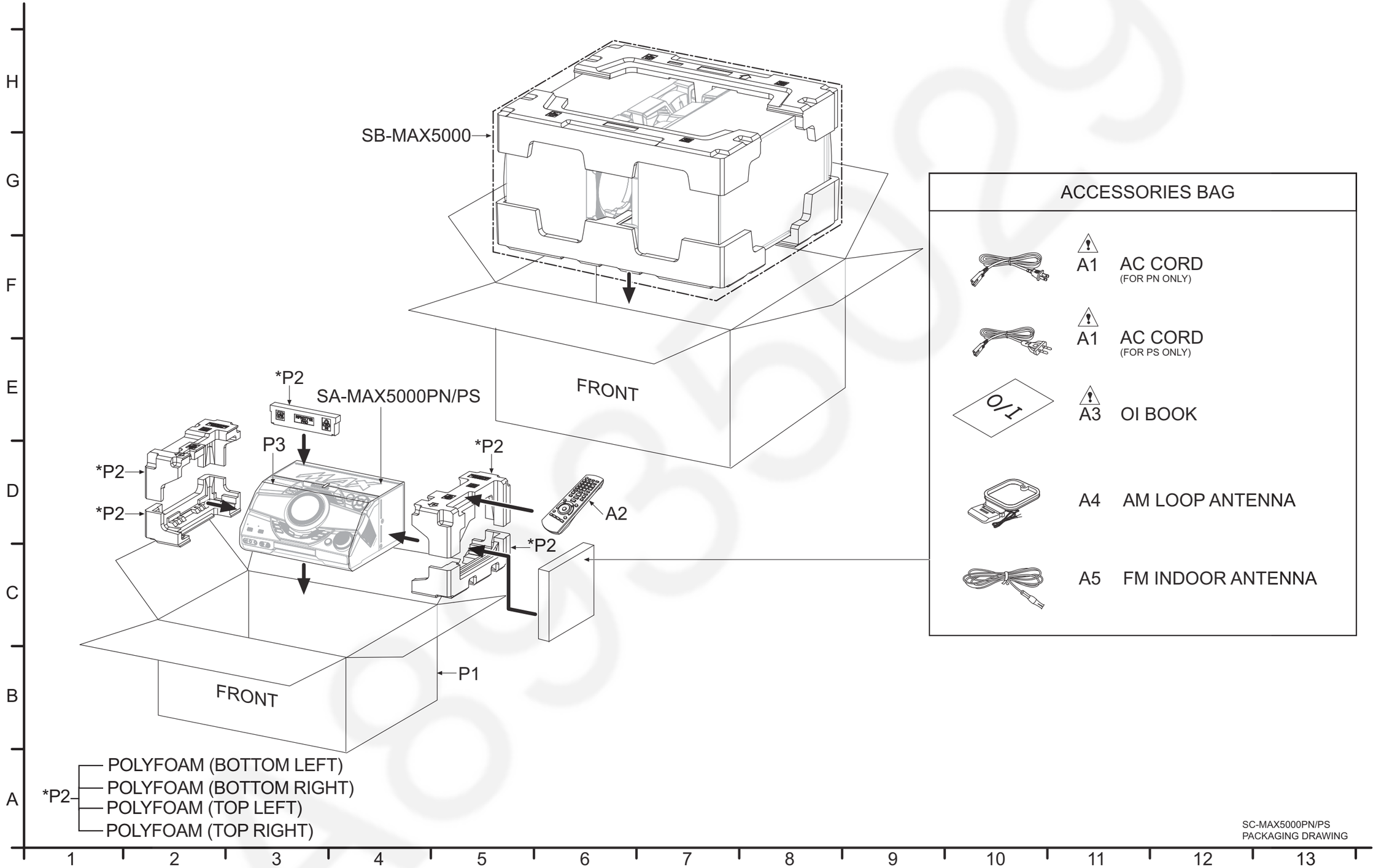

15.5. Mechanical Replacement Part List

Important Safety Notice

Components identified by ⚠ mark have special characteristics important for safety.
When replacing any of these components, use only manufacturer's specified parts.

RTL (Retention Time Limited)

Note: The marking (RTL) indicates that the Retention Time is Limited for this item.
After the discontinuation of this assembly in production, the item will continue to be available for a specific period of time. The retention period of availability is dependant on the type of assembly, and in accordance with the laws governing part and product retention. After the end of this period, the assembly will no longer be available.

Note:

- When replacing any of these components, be sure to use only manufacturer's specified parts shown in the replacement part list.
- The parenthesized indications on the Remarks column specify the destination & product color (Refer to the cover page for the information).
- Parts without these indications shall be used for all areas.
- This product uses a laser diode. Refer to "Precaution of Laser Diode".
- All parts mentioned are supplied by PMX unless indicated likewise.
- Reference for O/I book languages are as follows:

Ar:	Arabic	Du:	Dutch	It:	Italian	Sp:	Spanish
Cf:	Canadian French	En:	English	Ko:	Korean	Sw:	Swedish
Cz:	Czech	Fr:	French	Po:	Polish	Co:	Traditional Chinese
Da:	Danish	Ge:	German	Ru:	Russian	Cn:	Simplified Chinese
Pe:	Persian	Ur:	Ukraine	Pr:	Portuguese	Fi:	Finnish

Safety	Ref. No.	Part No.	Part Name & Description	Qty	Remarks
			CABINET AND CHASSIS		
	1	REE1929	10P FFC (MAIN-CD INTERFACE)	1	
	2	REE2144	12P FFC (NFC-MAIN)	1	
	3	REE2145	30P FFC (PANEL-MAIN)	1	
	4	TNMX021	12P WIRE (MIC-MAIN)	1	
	5	REX1951	9P WIRE (MIC-MAIN)	1	
	6	REX1702	13P WIRE (MAIN-SMPS)	1	
	9	RGC0056-S	LIGHT REFLECTOR	1	
	10	RFKGX5000PNK	FRONT PANEL ASS'Y	1	
	10-1	RGK2635-K	CD LID	1	
	10-2	RKAX0042-K	LEG CUSHION	2	
	10-3	RMB0982	CD LID SPRING	1	
	10-4	RMGX0033A-K	CD LID CUSHION	1	
	10-5	RGL0830-Q	USB LIGHT PIECE	1	
	11	RGL0826-Q	LIGHT WING	1	
	12	RGL0827-Q	LIGHT ORNAMENT	1	
	13	RGL0840-Q	PATTERN LIGHT PIECE	2	
⚠	14	RGR0484E-A	REAR PANEL	1	PN
⚠	14	RGR0484E-C	REAR PANEL	1	PS

Safety	Ref. No.	Part No.	Part Name & Description	Qty	Remarks
	15	RGW0450-K	MIC KNOB	1	
	16	RGW0448A-K	DJ TABLE	1	
	17	RGW0457-K	VOLUME KNOB	1	
	18	RKAX0042-K	LEG CUSHION	2	
⚠	19	RKM0771-K	TOP CABINET	1	
	20	RMA2506-1	SIDE ANGLE L	1	
	21	RMA2507-1	SIDE ANGLE R	1	
	22	RMK0911	BOTTOM CHASSIS	1	
	25	RMQX0382-3	CD MECHA SUPPORT	2	
	26	RMX0510	PCB SPACER	3	
	29	RMQ2552	DJ SLIDER SHEET	1	
	30	L6FAYYYH0354	FAN UNIT	2	
	31	RHD26016-1L	SCREW	3	
	32	RHD26046-L	SCREW	26	
	33	RHD30007-K2J	SCREW	4	
	34	RHD30111-31	SCREW	14	
	35	RHD30119-S	SCREW	11	
	36	RHDX031008	SCREW	2	
	39	RHD26078	SCREW	5	
	41	RMN1049-1	FL HOLDER	1	
	42	RMN1085-1	IR HOLDER	1	
	46	RSC1230	TUNER SHIELD	1	
	48	RMA2567	FAN ANGLE	2	
			TRAVERSE DECK		
⚠	301	RAE1052Z-V	TRAVERSE ASS'Y	1	(E.S.D)
	312	XTN2+6GFJ	SCREW	2	
			PACKING MATERIALS		

Safety	Ref. No.	Part No.	Part Name & Description	Qty	Remarks
	P1	RPG0S97	PACKING CASE	1	PN
	P2	RPG0S98	PACKING CASE	1	PS
	P2	RPN2771-1	POLYFOAM	1	
	P3	RPH0333	MIRAMAT SHEET	1	
			ACCESSORIES		
⚠	A1	K2CB2CB00022	AC CORD	1	PN
⚠	A1	K2CQ2YY00119	AC CORD	1	PS
	A2	N2QAYB001022	REMOTE CONTROL	1	
⚠	A3	RQT0A63-1B	O/I BOOK (En)	1	
⚠	A3	RQT0A64-1M	O/I BOOK (Sp)	1	
	A4	N1DYYYY00011	AM LOOP ANTENNA	1	
	A5	RSAX0002	FM INDOOR ANTENNA	1	

A89350029

15.6. Electrical Replacement Part List

Important Safety Notice

Components identified by ⚠ mark have special characteristics important for safety.
When replacing any of these components, use only manufacturer's specified parts.

RTL (Retention Time Limited)

Note: The marking (RTL) indicates that the Retention Time is Limited for this item.
After the discontinuation of this assembly in production, the item will continue to be available for a specific period of time. The retention period of availability is dependant on the type of assembly, and in accordance with the laws governing part and product retention. After the end of this period, the assembly will no longer be available.

Note:

- When replacing any of these components, be sure to use only manufacturer's specified parts shown in the replacement part list.
- The parenthesized indications on the Remarks column specify the destination & product color (Refer to the cover page for the information).
- Parts without these indications shall be used for all areas.
- This product uses a laser diode. Refer to "Precaution of Laser Diode".
- Capacitor value are in microfarads (uF) unless specified otherwise, P=Pico-farads (pF), F=Farads.
- Resistance values are in ohms, unless specified otherwise, 1K=1000 (OHM).
- All parts mentioned are supplied by PAVCJM unless indicated likewise.
- Parts mentioned [SPG] in the Remarks column are supplied by JAPAN.

E.S.D. standards for Electrostatically Sensitive Devices, refer to "PREVENTION OF ELECTROSTATIC DISCHARGE (ESD) TO ELECTROSTATIC SENSITIVE (ES) DEVICES" section.

Safety	Ref. No.	Part No.	Part Name & Description	Qty	Remarks
			PRINTED CIRCUIT BOARDS		
	PCB1	RFKV5318AA	MAIN/NFC KIT ASS'Y	1	PN
	PCB1	RFKV5318BA	MAIN/NFC KIT ASS'Y	1	PS
	PCB3	RFKV5318AB	NFC P.C.B	1	PN
	PCB3	RFKV5318BB	NFC P.C.B	1	PS
	PCB4	REP5316AA	PANEL P.C.B	1	(RTL)
	PCB5	REP5316AB	MIC P.C.B	1	(RTL)
	PCB6	REP5316AC	USB P.C.B	1	(RTL)
⚠	PCB7	REP5304E	SMPS P.C.B	1	(RTL)
	PCB9	REP4945B	CD INTERFACE P.C.B	1	(RTL)
			INTEGRATED CIRCUITS		
	IC52	VUEALLPT087	IC	1	(E.S.D)
	IC1001	C1AB00004409	IC	1	(E.S.D)
	IC1002	C0EBY0000664	IC	1	(E.S.D)
	IC1003	RFKWFX5000LM	IC	1	(E.S.D)
	IC1004	RFKWEX9000LM	IC	1	(E.S.D)
	IC1201	C0DBBYY00104	IC	1	(E.S.D)
	IC1202	C0ZBZ0002175	IC	1	(E.S.D)
	IC1401	C1AB00003130	IC	1	(E.S.D)
	IC1402	MIP2F20MSSCF	IC	1	(E.S.D)
	IC1501	C0DBBYY00077	IC	1	(E.S.D)
	IC1601	C0DAZYY00039	IC	1	(E.S.D)
	IC1701	C0DAZYY00039	IC	1	(E.S.D)
	IC2001	RFKWNX9000LM	IC	1	(E.S.D)
	IC2101	C0DBAYY01594	IC	1	(E.S.D)

Safety	Ref. No.	Part No.	Part Name & Description	Qty	Remarks
	IC2102	C0ABBB000342	IC	1	(E.S.D)
	IC2103	C0DBAYY01594	IC	1	(E.S.D)
	IC2104	C0DBGYY03909	IC	1	(E.S.D)
	IC2106	C0DBEYY00146	IC	1	(E.S.D)
	IC2107	C0DBGYY00911	IC	1	(E.S.D)
	IC2108	C0DBGYY03909	IC	1	(E.S.D)
	IC3001	C1AB00003986	IC	1	(E.S.D)
	IC3101	C1AB00004014	IC	1	(E.S.D)
	IC3201	C1AB00004014	IC	1	(E.S.D)
	IC3301	C1AB00003986	IC	1	(E.S.D)
	IC4001	VUEALLPT090	IC	1	(E.S.D)
	IC5001	C0GBY0000213	IC	1	(E.S.D)
	IC6001	C0JBAZ002990	IC	1	(E.S.D)
	IC6002	C0ZBZ0001747	IC	1	(E.S.D)
	IC6100	C0JBAR000367	IC	1	(E.S.D)
	IC9002	C0DBZYY00716	IC	1	(E.S.D)
	IC9003	C0DBZYY00716	IC	1	(E.S.D)
			TRANSISTORS		
	Q1001	B1ABCF000176	TRANSISTOR	1	(E.S.D)
	Q1103	B1CERR000155	TRANSISTOR	1	(E.S.D)
	Q1206	B1ABCF000176	TRANSISTOR	1	(E.S.D)
	Q1402	B1ACKD000006	TRANSISTOR	1	(E.S.D)
⚠	Q1403	B3PBA0000579	TRANSISTOR	1	(E.S.D)
⚠	Q1404	B3PBA0000579	TRANSISTOR	1	(E.S.D)
⚠	Q1405	B3PBA0000579	TRANSISTOR	1	(E.S.D)
	Q1501	B1CERR000147	TRANSISTOR	1	(E.S.D)
	Q1502	B1CERR000147	TRANSISTOR	1	(E.S.D)
⚠	Q1505	B3PBA0000579	TRANSISTOR	1	(E.S.D)
⚠	Q1701	B3PBA0000579	TRANSISTOR	1	(E.S.D)
	Q1702	B1ABCF000176	TRANSISTOR	1	(E.S.D)
	Q1765	B1ADCE000012	TRANSISTOR	1	(E.S.D)
	Q1766	B1ABCF000176	TRANSISTOR	1	(E.S.D)

Safety	Ref. No.	Part No.	Part Name & Description	Qty	Remarks
	Q2100	B1AAJC000019	TRANSISTOR	1	(E.S.D)
	Q2103	B1AAJC000019	TRANSISTOR	1	(E.S.D)
	Q2104	B1ABCF000231	TRANSISTOR	1	(E.S.D)
	Q2106	B1ABCF000231	TRANSISTOR	1	(E.S.D)
	Q2107	B1ADCE000012	TRANSISTOR	1	(E.S.D)
	Q2108	B1ABCF000231	TRANSISTOR	1	(E.S.D)
	Q2110	B1ABCF000231	TRANSISTOR	1	(E.S.D)
	Q2111	B1ABCF000231	TRANSISTOR	1	(E.S.D)
	Q2112	B1ABCF000231	TRANSISTOR	1	(E.S.D)
	Q2113	B1BACG000023	TRANSISTOR	1	(E.S.D)
	Q2116	B1GBCFJJ0041	TRANSISTOR	1	(E.S.D)
	Q2117	B1ADGF000010	TRANSISTOR	1	(E.S.D)
	Q2119	B1GBCFJJ0041	TRANSISTOR	1	(E.S.D)
	Q3500	B1ABCF000231	TRANSISTOR	1	(E.S.D)
	Q3501	B1ABCF000231	TRANSISTOR	1	(E.S.D)
	Q3502	B1ADCE000012	TRANSISTOR	1	(E.S.D)
	Q3503	B1ABCF000231	TRANSISTOR	1	(E.S.D)
	Q5001	B1ADCF000001	TRANSISTOR	1	(E.S.D)
	Q6301	B1HFCDE00002	TRANSISTOR	1	(E.S.D)
	Q6302	B1HFCDE00002	TRANSISTOR	1	(E.S.D)
	Q8512	B1GDCFGG0026	TRANSISTOR	1	(E.S.D)
	Q8513	B1GDCFGG0026	TRANSISTOR	1	(E.S.D)
	Q9003	B1ADCE000012	TRANSISTOR	1	(E.S.D)
	Q9004	B1ADCE000012	TRANSISTOR	1	(E.S.D)
	QR1201	B1GBCFJJ0040	TRANSISTOR	1	(E.S.D)
	QR1601	B1GBCFLL0037	TRANSISTOR	1	(E.S.D)
	QR1701	B1GBCFLL0037	TRANSISTOR	1	(E.S.D)
	QR1720	B1GBCFLL0037	TRANSISTOR	1	(E.S.D)
	QR1767	B1GBCFJJ0041	TRANSISTOR	1	(E.S.D)
	QR2102	B1GBCFJJ0040	TRANSISTOR	1	(E.S.D)
	QR2103	B1GBCFJJ0051	TRANSISTOR	1	(E.S.D)
	QR6001	B1GBCFGG0030	TRANSISTOR	1	(E.S.D)
	QR6002	B1GBCFGG0030	TRANSISTOR	1	(E.S.D)
	QR6003	B1GBCFGG0030	TRANSISTOR	1	(E.S.D)
	QR6004	B1GBCFGG0030	TRANSISTOR	1	(E.S.D)
	QR6005	B1GBCFGG0030	TRANSISTOR	1	(E.S.D)
	QR6006	B1GBCFGG0030	TRANSISTOR	1	(E.S.D)
	QR6007	B1GBCFGG0030	TRANSISTOR	1	(E.S.D)
	QR6008	B1GBCFGG0030	TRANSISTOR	1	(E.S.D)
	QR6009	B1GBCFGG0030	TRANSISTOR	1	(E.S.D)
	QR6010	B1GBCFGG0030	TRANSISTOR	1	(E.S.D)
	QR6011	B1GBCFGG0030	TRANSISTOR	1	(E.S.D)
	QR6012	B1GBCFGG0030	TRANSISTOR	1	(E.S.D)
	QR6013	B1GBCFGG0030	TRANSISTOR	1	(E.S.D)
	QR6014	B1GBCFGG0030	TRANSISTOR	1	(E.S.D)
	QR6015	B1GBCFGG0030	TRANSISTOR	1	(E.S.D)
	QR6016	B1GBCFGG0030	TRANSISTOR	1	(E.S.D)
	QR6017	B1GBCFGG0030	TRANSISTOR	1	(E.S.D)
	QR6018	B1GBCFGG0030	TRANSISTOR	1	(E.S.D)
	QR6019	B1GBCFGG0030	TRANSISTOR	1	(E.S.D)
	QR6020	B1GBCFGG0030	TRANSISTOR	1	(E.S.D)
	QR6021	B1GBCFGG0030	TRANSISTOR	1	(E.S.D)
	QR6022	B1GBCFGG0030	TRANSISTOR	1	(E.S.D)
	QR6023	B1GBCFGG0030	TRANSISTOR	1	(E.S.D)
	QR6024	B1GBCFGG0030	TRANSISTOR	1	(E.S.D)
	QR6025	B1GBCFGG0030	TRANSISTOR	1	(E.S.D)
	QR6026	B1GBCFGG0030	TRANSISTOR	1	(E.S.D)
	QR6027	B1GBCFGG0030	TRANSISTOR	1	(E.S.D)
	QR6028	B1GBCFGG0030	TRANSISTOR	1	(E.S.D)
	QR6029	B1GBCFGG0030	TRANSISTOR	1	(E.S.D)
	QR6030	B1GBCFGG0030	TRANSISTOR	1	(E.S.D)
	QR6031	B1GBCFGG0030	TRANSISTOR	1	(E.S.D)
	QR6032	B1GBCFGG0030	TRANSISTOR	1	(E.S.D)
	QR6100	B1GBCFJJ0040	TRANSISTOR	1	(E.S.D)
	QR6101	B1GBCFJJ0040	TRANSISTOR	1	(E.S.D)
	QR8501	B1GBCFGG0030	TRANSISTOR	1	(E.S.D)
	QR8502	B1GBCFGG0030	TRANSISTOR	1	(E.S.D)
	QR8503	B1GBCFGG0030	TRANSISTOR	1	(E.S.D)
	QR8504	B1GBCFGG0030	TRANSISTOR	1	(E.S.D)
	QR8505	B1GBCFGG0030	TRANSISTOR	1	(E.S.D)
	QR9002	B1GBCFGN0016	TRANSISTOR	1	(E.S.D)
	QR9003	B1GBCFGN0016	TRANSISTOR	1	(E.S.D)

Safety	Ref. No.	Part No.	Part Name & Description	Qty	Remarks
			DIODES		
	D1001	B0FBBR000114	DIODE	1	(E.S.D)
	D1201	B0ABRR000004	DIODE	1	(E.S.D)
	D1203	B0ECNR000003	DIODE	1	(E.S.D)
	D1204	B0HAMP000094	DIODE	1	(E.S.D)
	D1205	B0HAMP000094	DIODE	1	(E.S.D)
	D1402	B0EDHS000002	DIODE	1	(E.S.D)
	D1403	B0HAMP000094	DIODE	1	(E.S.D)
	D1404	B0EAMM000057	DIODE	1	(E.S.D)
	D1405	B0EAMM000057	DIODE	1	(E.S.D)
	D1406	B0ECET000006	DIODE	1	(E.S.D)
	D1416	DZ2J100M0L	DIODE	1	(E.S.D)
	D1502	DZ2J120M0L	DIODE	1	(E.S.D)
	D1503	B0HAMP000094	DIODE	1	(E.S.D)
	D1504	B0JCPD000039	DIODE	1	(E.S.D)
	D1505	B0JCPD000039	DIODE	1	(E.S.D)
	D1506	B0EAMR000018	DIODE	1	(E.S.D)
	D1601	B0EAMM000057	DIODE	1	(E.S.D)
	D1703	B0FBCM000011	DIODE	1	(E.S.D)
	D1705	B0FBCM000011	DIODE	1	(E.S.D)
	D2100	B0ADDJ000032	DIODE	1	(E.S.D)
	D2101	DA2J10100L	DIODE	1	(E.S.D)
	D2103	DA2J10100L	DIODE	1	(E.S.D)
	D2104	DZ2J130M0L	DIODE	1	(E.S.D)
	D2105	B0ADDJ000032	DIODE	1	(E.S.D)
	D2106	B0JCPG000032	DIODE	1	(E.S.D)
	D2107	B0JCPG000032	DIODE	1	(E.S.D)
	D2109	B0ADDJ000032	DIODE	1	(E.S.D)
	D2111	DZ2J130M0L	DIODE	1	(E.S.D)
	D3000	B0ACCK000005	DIODE	1	(E.S.D)
	D3001	B0ACCK000005	DIODE	1	(E.S.D)
	D5001	B0JCAE000001	DIODE	1	(E.S.D)
	D6001	B3ABA0000977	DIODE	1	(E.S.D)
	D6002	B3AEA0000203	DIODE	1	(E.S.D)
	D6003	B3AAA0001246	DIODE	1	(E.S.D)
	D6004	B3ABA0000977	DIODE	1	(E.S.D)
	D6005	B3AEA0000203	DIODE	1	(E.S.D)
	D6006	B3AAA0001246	DIODE	1	(E.S.D)
	D6007	B3ABA0000977	DIODE	1	(E.S.D)
	D6008	B3AEA0000203	DIODE	1	(E.S.D)
	D6009	B3AAA0001246	DIODE	1	(E.S.D)
	D6010	B3ABA0000977	DIODE	1	(E.S.D)
	D6011	B3AEA0000203	DIODE	1	(E.S.D)
	D6012	B3AAA0001246	DIODE	1	(E.S.D)
	D6013	B3ABA0000977	DIODE	1	(E.S.D)
	D6014	B3AEA0000203	DIODE	1	(E.S.D)
	D6015	B3AAA0001246	DIODE	1	(E.S.D)
	D6016	B3ABA0000977	DIODE	1	(E.S.D)
	D6017	B3AEA0000203	DIODE	1	(E.S.D)
	D6018	B3AAA0001246	DIODE	1	(E.S.D)
	D6019	B3ABA0000977	DIODE	1	(E.S.D)
	D6020	B3AEA0000203	DIODE	1	(E.S.D)
	D6021	B3AAA0001246	DIODE	1	(E.S.D)
	D6022	B3ABA0000977	DIODE	1	(E.S.D)
	D6023	B3AEA0000203	DIODE	1	(E.S.D)
	D6024	B3AAA0001246	DIODE	1	(E.S.D)
	D6025	B3AAA0001243	DIODE	1	(E.S.D)
	D6026	B3AAA0001243	DIODE	1	(E.S.D)
	D6027	B3AAA0001243	DIODE	1	(E.S.D)
	D6028	B3AAA0001243	DIODE	1	(E.S.D)
	D6029	B3AAA0001243	DIODE	1	(E.S.D)
	D6030	B3AAA0001243	DIODE	1	(E.S.D)
	D6031	B3AAA0001243	DIODE	1	(E.S.D)
	D6032	B3AAA0001243	DIODE	1	(E.S.D)
	D6101	B3AAA0001243	DIODE	1	(E.S.D)
	D6102	B3AAA0001243	DIODE	1	(E.S.D)
	D6301	B0ADDH000009	DIODE	1	(E.S.D)
	D6302	B0ADDH000009	DIODE	1	(E.S.D)
			VARISTOR		
⚠	DZ1001	D4EAY511A127	VARISTOR	1	(E.S.D)

Safety	Ref. No.	Part No.	Part Name & Description	Qty	Remarks
			VARIABLE RESIS-TORS		
	VR1400	EVUE27FK2B53	MIC JOG	1	
	VR6201	K9AA024Y0009	MULTI CONTROL JOG	1	
	VR6202	K9AA024Y0009	VOLUME JOG	1	
			ESD SUPRESSOR		
	VA51	EZAEG2A50AX	ESD SUPRESSOR	1	
			SWITCHES		
	S6201	EVQ21405RJ	SW	1	
	S6202	EVQ21405RJ	SW	1	
	S6203	EVQ21405RJ	SW	1	
	S6204	EVQ21405RJ	SW	1	
	S6205	EVQ21405RJ	SW	1	
	S6206	EVQ21405RJ	SW	1	
	S6207	EVQ21405RJ	SW	1	
	S6208	EVQ21405RJ	SW	1	
	S6209	EVQ21405RJ	SW	1	
	S6210	EVQ21405RJ	SW	1	
	S6211	EVQ21405RJ	SW	1	
	S6212	EVQ21405RJ	SW	1	
	S6213	EVQ21405RJ	SW	1	
	S6214	EVQ21405RJ	SW	1	
	S6215	EVQ21405RJ	SW	1	
	S6216	EVQ21405RJ	SW	1	
	S6217	EVQ21405RJ	SW	1	
	S6218	EVQ21405RJ	SW	1	
	S6219	EVQ21405RJ	SW	1	
	S6220	EVQ21405RJ	SW	1	
	S6221	EVQ21405RJ	SW	1	
	S6222	EVQ21405RJ	SW	1	
	S6223	EVQ21405RJ	SW	1	
	S7201	K0L1BA000158	SW	1	
			CONNECTORS		
	CN1401	K1KA09BA0061	9P CONNECTOR	1	
	CN1851	K1KA13AA0181	13P CONNECTOR	1	
	CN2103	K1YZ13000002	13P CONNECTOR	1	
	CN2104	K1KA02AA0186	2P CONNECTOR	1	
	CN2105	K1KA02AA0186	2P CONNECTOR	1	
	CN6002	K1KA12BA0062	12P CONNECTOR	1	
	CN7001	K1MY05BA0565	5P CONNECTOR	1	
	CN7002	K1MN10B00016	10P CONNECTOR	1	
	P1003	K1MN06A00013	6P CONNECTOR	1	
	P1501	K1KA04BA0061	4P CONNECTOR	1	
	P1502	K1KA04BA0061	4P CONNECTOR	1	
	P1802	K1MY30AA0267	30P CONNECTOR	1	
	P1803	K1KA09AA0193	9P CONNECTOR	1	
	P1804	K1MY12AA0267	12P CONNECTOR	1	
	P5001	K1MN10AA0076	10P CONNECTOR	1	
	P5002	K1MY24A00001	24P CONNECTOR	1	
	P6200	K1MY30BA0566	30P CONNECTOR	1	
	P9001	K1KA12AA0194	12P CONNECTOR	1	
			COILS AND INDUC-TORS		
	L51	G1CR18JA0020	INDUCTOR	1	
	L52	G2A380Y00002	COIL	1	
	L54	G1C1R0MA0204	INDUCTOR	1	
⚠	L1002	G0B502J00005	LINE FILTER	1	
	L1201	G0C281J00001	INDUCTOR	1	
	L2101	G1C470MA0291	INDUCTOR	1	
	L2102	G1C330MA0234	INDUCTOR	1	
	L3000	G0C100M00013	INDUCTOR	1	
	L3001	G0C100M00013	INDUCTOR	1	
	L3003	G1C4R7MA0172	INDUCTOR	1	

Safety	Ref. No.	Part No.	Part Name & Description	Qty	Remarks
	L3100	G0C100M00013	INDUCTOR	1	
	L3101	G0C100M00013	INDUCTOR	1	
	L3200	G0C100M00013	INDUCTOR	1	
	L3201	G0C100M00013	INDUCTOR	1	
	L3300	G0C100M00013	INDUCTOR	1	
	L3301	G0C100M00013	INDUCTOR	1	
	LB51	J0JBC0000032	INDUCTOR	1	
	LB52	J0JYC0000118	INDUCTOR	1	
	LB1001	J0JBC0000010	INDUCTOR	1	
	LB1002	J0JBC0000010	INDUCTOR	1	
	LB1003	J0JBC0000010	INDUCTOR	1	
	LB1004	J0JBC0000010	INDUCTOR	1	
	LB1006	J0JBC0000010	INDUCTOR	1	
	LB1007	J0JBC0000010	INDUCTOR	1	
	LB1008	J0JCC0000286	INDUCTOR	1	
	LB1009	J0JCC0000286	INDUCTOR	1	
	LB1010	J0JCC0000286	INDUCTOR	1	
	LB1011	J0JCC0000286	INDUCTOR	1	
	LB1015	J0JBC0000010	INDUCTOR	1	
	LB1018	J0JCC0000286	INDUCTOR	1	
	LB1019	J0JCC0000287	INDUCTOR	1	
	LB1020	J0JCC0000287	INDUCTOR	1	
	LB1021	J0JCC0000287	INDUCTOR	1	
	LB1022	J0JCC0000287	INDUCTOR	1	
	LB1023	J0JCC0000287	INDUCTOR	1	
	LB1024	J0JCC0000287	INDUCTOR	1	
	LB1025	J0JCC0000286	INDUCTOR	1	
	LB1026	J0JCC0000286	INDUCTOR	1	
	LB1027	J0JCC0000286	INDUCTOR	1	
	LB1028	J0JCC0000286	INDUCTOR	1	
	LB1029	J0JCC0000286	INDUCTOR	1	
	LB1030	J0JBC0000010	INDUCTOR	1	
	LB1031	J0JBC0000010	INDUCTOR	1	
	LB1032	J0JBC0000010	INDUCTOR	1	
	LB1033	J0JBC0000010	INDUCTOR	1	
	LB1034	J0JBC0000010	INDUCTOR	1	
	LB1036	J0JCC0000286	INDUCTOR	1	
	LB1037	J0JCC0000286	INDUCTOR	1	
	LB1038	J0JCC0000286	INDUCTOR	1	
	LB1039	J0JCC0000286	INDUCTOR	1	
	LB1040	J0JCC0000286	INDUCTOR	1	
	LB1042	J0JCC0000286	INDUCTOR	1	
	LB1046	J0JCC0000286	INDUCTOR	1	
	LB1047	J0JCC0000286	INDUCTOR	1	
	LB1048	J0JCC0000286	INDUCTOR	1	
	LB1201	J0JYC0000656	INDUCTOR	1	
	LB1404	J0JBC0000019	INDUCTOR	1	
	LB1405	J0JBC0000019	INDUCTOR	1	
	LB1406	J0JBC0000019	INDUCTOR	1	
	LB1407	J0JBC0000019	INDUCTOR	1	
	LB1501	J0JGC0000020	INDUCTOR	1	
	LB1502	J0JKB0000015	INDUCTOR	1	
	LB1509	J0JYC0000656	INDUCTOR	1	
	LB1801	J0JYC0000656	INDUCTOR	1	
	LB1802	J0JYC0000656	INDUCTOR	1	
	LB1803	J0JYC0000656	INDUCTOR	1	
	LB1804	J0JYC0000656	INDUCTOR	1	
	LB1805	J0JYC0000656	INDUCTOR	1	
	LB1814	J0JYC0000656	INDUCTOR	1	
	LB1815	J0JYC0000656	INDUCTOR	1	
	LB1816	J0JYC0000656	INDUCTOR	1	
	LB1817	J0JYC0000656	INDUCTOR	1	
	LB1818	G1C100KA0101	INDUCTOR	1	
	LB2001	J0JBC0000010	INDUCTOR	1	
	LB2100	J0JKB0000020	INDUCTOR	1	
	LB2101	J0JHC0000046	INDUCTOR	1	
	LB2103	J0JHC0000046	INDUCTOR	1	
	LB2104	J0JGC0000063	INDUCTOR	1	
	LB2105	J0JHC0000046	INDUCTOR	1	
	LB4001	J0JBC0000010	INDUCTOR	1	
	LB4002	J0JBC0000010	INDUCTOR	1	
	LB4003	J0JYC0000656	INDUCTOR	1	
	LB5001	J0JBC0000010	INDUCTOR	1	

Safety	Ref. No.	Part No.	Part Name & Description	Qty	Remarks
	LB5002	G1C100KA0101	INDUCTOR	1	
	LB5003	J0JHC0000045	INDUCTOR	1	
	LB5004	J0JHC0000045	INDUCTOR	1	
	LB5005	J0JBC0000010	INDUCTOR	1	
	LB5016	J0JBC0000010	INDUCTOR	1	
	LB6001	J0JYC0000656	INDUCTOR	1	
	LB6100	J0JBC0000134	INDUCTOR	1	
	LB9001	J0JGC0000070	INDUCTOR	1	
	LB9002	J0JGC0000070	INDUCTOR	1	
			TRANSFORMERS		
⚠	T1401	G4DYA0000592	SWITCHING TRANS-FORMER	1	
⚠	T1501	G4DYA0000778	SWITCHING TRANS-FORMER	1	
			FILTERS		
	T9001	J0ZZB0000182	FILTER	1	
	T9002	J0ZZB0000182	FILTER	1	
			TERMINALS		
	ZJ1004	K4CZ01000027	TERMINAL	1	
	ZJ1103	K4CZ01000027	TERMINAL	1	
	ZJ5001	K9ZZ00001279	EARTH PLATE	1	
	ZJ6101	K9ZZ00001279	EARTH PLATE	1	
			OSCILLATORS		
	X1001	H0J169500045	OSCILLATOR	1	
	X1002	H0A327200191	OSCILLATOR	1	
	X4001	H0J245500110	OSCILLATOR	1	
			FUSE		
⚠	F1001	K5D103BNA005	FUSE	1	
⚠	F1401	K5G501YA0081	FUSE	1	
⚠	F1501	K5G502Y00006	FUSE	1	
			FUSE HOLDERS		
	ZA1002	K3GE1ZZ00001	FUSE HOLDER	1	
	ZA1003	K3GE1ZZ00001	FUSE HOLDER	1	
			THERMISTOR		
	TH1701	D4CCY1040001	THERMISTOR	1	
			FL DISPLAY		
	DP6300	A2BB00000186	FL DISPLAY	1	
			JACKS		
	JK51	K4ZZ02000103	JK FM ANT	1	
	JK52	K4AC02B00042	JK AM ANT	1	
	JK1402	K2HC1YYB0033	JK AUX IN2	1	
	JK1403	K2HB107B0001	JK MIC	1	
	JK3500	K4AZ12A00013	JK SPEAKERS	1	
	JK6001	K1FY104A0034	JK USB PORT A	1	
	JK6002	K1FY104A0034	JK USB PORT B	1	
	JK6002	K2HA2YYA0009	JK AUX IN1	1	
⚠	P1001	K2AA2B000011	AC INLET	1	PS
⚠	P1001	K2AB2B000007	AC INLET	1	PN
			CHIP JUMPERS		
	L53	D0GBR00J0004	0 1/10W	1	
	LB1501	D0GBR00J0004	0 1/10W	1	
	LB1502	D0GBR00J0004	0 1/10W	1	
	LB1505	D0GBR00J0004	0 1/10W	1	

Safety	Ref. No.	Part No.	Part Name & Description	Qty	Remarks
	LB1506	D0GBR00J0004	0 1/10W	1	
	LB1507	D0GBR00J0004	0 1/10W	1	
	LB1518	D0GBR00J0004	0 1/10W	1	
	LB1519	D0GBR00J0004	0 1/10W	1	
	LB1528	D0GBR00J0004	0 1/10W	1	
	LB1529	D0GBR00J0004	0 1/10W	1	
	LB1530	D0GBR00J0004	0 1/10W	1	
	LB5006	D0GBR00J0004	0 1/10W	1	
	LB5007	D0GBR00J0004	0 1/10W	1	
	LB5008	D0GBR00J0004	0 1/10W	1	
	LB5009	D0GBR00J0004	0 1/10W	1	
	LB5010	D0GBR00J0004	0 1/10W	1	
	LB5011	D0GBR00J0004	0 1/10W	1	
	LB5012	D0GBR00J0004	0 1/10W	1	
	LB5013	D0GBR00J0004	0 1/10W	1	
	LB5014	D0GBR00J0004	0 1/10W	1	
	LB5015	D0GBR00J0004	0 1/10W	1	
	W2	D0GFR00J0005	0 1/4W	1	
	W11	D0GFR00J0005	0 1/4W	1	
	W20	D0GFR00J0005	0 1/4W	1	
	W37	D0GFR00J0005	0 1/4W	1	
	W1400	D0GBR00J0004	0 1/10W	1	
	W1401	D0GFR00J0005	0 1/4W	1	
	W1402	D0GDR00J0004	0 1/8W	1	
	W1403	D0GFR00J0005	0 1/4W	1	
	W1404	D0GDR00J0004	0 1/8W	1	
	W1405	D0GDR00J0004	0 1/8W	1	
	W1406	D0GBR00J0004	0 1/10W	1	
	W1407	D0GDR00J0004	0 1/8W	1	
	W1408	D0GDR00J0004	0 1/8W	1	
	W1409	D0GFR00J0005	0 1/4W	1	
	W1410	D0GBR00J0004	0 1/10W	1	
	W1411	D0GFR00J0005	0 1/4W	1	
	W1412	D0GFR00J0005	0 1/4W	1	
	W1413	D0GDR00J0004	0 1/8W	1	
	W1414	D0GBR00J0004	0 1/10W	1	
	W1415	D0GDR00J0004	0 1/8W	1	
	W1416	D0GDR00J0004	0 1/8W	1	
	W6000	D0GFR00J0005	0 1/4W	1	
	W6001	D0GBR00J0004	0 1/10W	1	
	W6002	D0GDR00J0004	0 1/8W	1	
	W6003	D0GDR00J0004	0 1/8W	1	
	W6004	D0GFR00J0005	0 1/4W	1	
	W6005	D0GFR00J0005	0 1/4W	1	
	W6006	D0GFR00J0005	0 1/4W	1	
	W6007	D0GFR00J0005	0 1/4W	1	
	W6008	D0GFR00J0005	0 1/4W	1	
	W6009	D0GFR00J0005	0 1/4W	1	
	W6010	D0GFR00J0005	0 1/4W	1	
	W6011	D0GFR00J0005	0 1/4W	1	
	W6012	D0GFR00J0005	0 1/4W	1	
	W6013	D0GBR00J0004	0 1/10W	1	
	W6014	D0GFR00J0005	0 1/4W	1	
	W6015	D0GFR00J0005	0 1/4W	1	
	W6016	D0GDR00J0004	0 1/8W	1	
	W6017	D0GBR00J0004	0 1/10W	1	
	W6018	D0GFR00J0005	0 1/4W	1	
	W6019	D0GFR00J0005	0 1/4W	1	
	W6020	D0GFR00J0005	0 1/4W	1	
	W6021	D0GBR00J0004	0 1/10W	1	
	W6022	D0GFR00J0005	0 1/4W	1	
	W6023	D0GFR00J0005	0 1/4W	1	
	W6024	D0GFR00J0005	0 1/4W	1	
	W6025	D0GDR00J0004	0 1/8W	1	
	W6026	D0GFR00J0005	0 1/4W	1	
	W6027	D0GFR00J0005	0 1/4W	1	
	W6028	D0GDR00J0004	0 1/8W	1	
	W6029	D0GFR00J0005	0 1/4W	1	
	W6030	D0GDR00J0004	0 1/8W	1	
	W6032	D0GFR00J0005	0 1/4W	1	
	W6033	D0GFR00J0005	0 1/4W	1	
	W6034	D0GBR00J0004	0 1/10W	1	
	W6035	D0GFR00J0005	0 1/4W	1	

Safety	Ref. No.	Part No.	Part Name & Description	Qty	Remarks
	W6036	D0GFR00J0005	0 1/4W	1	
	W6037	D0GFR00J0005	0 1/4W	1	
	W6038	D0GFR00J0005	0 1/4W	1	
	W6039	D0GFR00J0005	0 1/4W	1	
	W6040	D0GDR00J0004	0 1/8W	1	
	W6041	D0GDR00J0004	0 1/8W	1	
	W6042	D0GBR00J0004	0 1/10W	1	
	W6043	D0GFR00J0005	0 1/4W	1	
	W6044	D0GFR00J0005	0 1/4W	1	
	W6045	D0GFR00J0005	0 1/4W	1	
	W6046	D0GFR00J0005	0 1/4W	1	
	W6047	D0GDR00J0004	0 1/8W	1	
	W6048	D0GFR00J0005	0 1/4W	1	
	W6049	D0GFR00J0005	0 1/4W	1	
	W6050	D0GFR00J0005	0 1/4W	1	
	W6051	D0GFR00J0005	0 1/4W	1	
	W6052	D0GBR00J0004	0 1/10W	1	
	W6053	D0GFR00J0005	0 1/4W	1	
	W6054	D0GFR00J0005	0 1/4W	1	
	W6055	D0GFR00J0005	0 1/4W	1	
	W6056	D0GFR00J0005	0 1/4W	1	
	W6057	D0GFR00J0005	0 1/4W	1	
	W6058	D0GFR00J0005	0 1/4W	1	
	W6059	D0GFR00J0005	0 1/4W	1	
	W6060	D0GFR00J0005	0 1/4W	1	
	W6061	D0GFR00J0005	0 1/4W	1	
	W6062	D0GFR00J0005	0 1/4W	1	
	W6063	D0GBR00J0004	0 1/10W	1	
	W6064	D0GFR00J0005	0 1/4W	1	
	W6065	D0GFR00J0005	0 1/4W	1	
	W6066	D0GFR00J0005	0 1/4W	1	
	W6067	D0GBR00J0004	0 1/10W	1	
	W6068	D0GFR00J0005	0 1/4W	1	
	W6069	D0GDR00J0004	0 1/8W	1	
	W6070	D0GFR00J0005	0 1/4W	1	
	W6071	D0GFR00J0005	0 1/4W	1	
	W6072	D0GDR00J0004	0 1/8W	1	
	W6073	D0GFR00J0005	0 1/4W	1	
	W6074	D0GDR00J0004	0 1/8W	1	
	W6075	D0GFR00J0005	0 1/4W	1	
	W6076	D0GFR00J0005	0 1/4W	1	
	W6077	D0GFR00J0005	0 1/4W	1	
	W6078	D0GFR00J0005	0 1/4W	1	
	W6079	D0GDR00J0004	0 1/8W	1	
	W6080	D0GDR00J0004	0 1/8W	1	
	W6081	D0GDR00J0004	0 1/8W	1	
	W6082	D0GFR00J0005	0 1/4W	1	
	W6083	D0GFR00J0005	0 1/4W	1	
	W6084	D0GFR00J0005	0 1/4W	1	
	W6085	D0GDR00J0004	0 1/8W	1	
	W6086	D0GFR00J0005	0 1/4W	1	
	W6087	D0GFR00J0005	0 1/4W	1	
	W6088	D0GDR00J0004	0 1/8W	1	
	W6089	D0GFR00J0005	0 1/4W	1	
	W6090	D0GFR00J0005	0 1/4W	1	
	W6091	D0GFR00J0005	0 1/4W	1	
	W6092	D0GFR00J0005	0 1/4W	1	
	W6200	D0GFR00J0005	0 1/4W	1	
	W6201	D0GFR00J0005	0 1/4W	1	
	W6202	D0GFR00J0005	0 1/4W	1	
	W6203	D0GDR00J0004	0 1/8W	1	
	K3000	D0YRR0000001	0 1W	1	
	K3001	D0YRR0000001	0 1W	1	
	K3200	D0YRR0000001	0 1W	1	
	K3201	D0YRR0000001	0 1W	1	
			REMOTE SENSOR		
	IR6301	B3RAD0000227	REMOTE SENSOR	1	
			RESISTORS		
	LB1005	D0GB100JA065	10 1/10W	1	

Safety	Ref. No.	Part No.	Part Name & Description	Qty	Remarks
	R51	D0GB222JA065	2.2K 1/10W	1	
	R52	D0GB561JA065	560 1/10W	1	
	R53	D0GA472JA023	4.7K 1/16W	1	
	R54	D0GA472JA023	4.7K 1/16W	1	
	R55	D0GA221JA023	220 1/16W	1	
	R56	D0GB221JA065	220 1/10W	1	
	R57	D0GA102JA023	1K 1/16W	1	
	R59	D0GB222JA065	2.2K 1/10W	1	
	R60	D0GB222JA065	2.2K 1/10W	1	
	R1001	D0GB471JA065	470 1/10W	1	
⚠	R1001	D0GF105JA048	1M 1/4W	1	
	R1002	D0GB101JA065	100 1/10W	1	
⚠	R1002	D0GF105JA048	1M 1/4W	1	
	R1003	D0GBR00J0004	0 1/10W	1	
⚠	R1003	D0GF105JA048	1M 1/4W	1	
	R1005	D0GB103JA065	10K 1/10W	1	
	R1010	D0GB101JA065	100 1/10W	1	
	R1011	D0GB221JA065	220 1/10W	1	
	R1012	D0GB221JA065	220 1/10W	1	
	R1013	D0GB221JA065	220 1/10W	1	
	R1015	D0GB102JA065	1K 1/10W	1	
	R1016	D0GB101JA065	100 1/10W	1	
	R1017	D0GB101JA065	100 1/10W	1	
	R1018	D0GB101JA065	100 1/10W	1	
	R1019	D0GB334JA065	330K 1/10W	1	
	R1022	D0GB221JA065	220 1/10W	1	
	R1023	D0GB221JA065	220 1/10W	1	
	R1024	D0GB681JA065	680 1/10W	1	
	R1025	D0GB105JA065	1M 1/10W	1	
	R1026	D0GB224JA065	220K 1/10W	1	
	R1027	D0GB106JA065	10M 1/10W	1	
	R1028	D0GB103JA065	10K 1/10W	1	
	R1030	D0GBR00J0004	0 1/10W	1	
	R1031	D0GB103JA065	10K 1/10W	1	
	R1033	D0GB103JA065	10K 1/10W	1	PS
	R1033	D0GB393JA065	39K 1/10W	1	PN
	R1034	D0GB103JA065	10K 1/10W	1	
	R1038	D0GA103JA023	10K 1/16W	1	
	R1039	D0GB222JA065	2.2K 1/10W	1	
	R1040	D0GB222JA065	2.2K 1/10W	1	
	R1041	D0GB101JA065	100 1/10W	1	
	R1042	D0GB103JA065	10K 1/10W	1	
	R1043	D0GB103JA065	10K 1/10W	1	
	R1044	D0GB103JA065	10K 1/10W	1	
	R1045	D0GBR00J0004	0 1/10W	1	
	R1046	D0GB101JA065	100 1/10W	1	
	R1047	D0GBR00J0004	0 1/10W	1	
	R1048	D0GB101JA065	100 1/10W	1	
	R1049	D0GB101JA065	100 1/10W	1	
	R1050	D0GB101JA065	100 1/10W	1	
	R1052	D0GB103JA065	10K 1/10W	1	
	R1055	D0GA101JA023	100 1/16W	1	
	R1056	D0GA101JA023	100 1/16W	1	
	R1057	D0GA101JA023	100 1/16W	1	
	R1058	D0GA101JA023	100 1/16W	1	
	R1059	D0GA101JA023	100 1/16W	1	
	R1060	D0GA101JA023	100 1/16W	1	
	R1065	D0GB101JA065	100 1/10W	1	
	R1066	D0GB101JA065	100 1/10W	1	
	R1067	D1BB6802A074	68K 1/10W	1	
	R1068	D1BB1502A074	15K 1/10W	1	
	R1070	J0JBC0000010	INDUCTOR	1	
	R1071	J0JBC0000010	INDUCTOR	1	
	R1072	J0JBC0000010	INDUCTOR	1	
	R1078	D0GA101JA023	100 1/16W	1	
	R1079	D1BB1502A074	15K 1/10W	1	
	R1080	D1BB6802A074	68K 1/10W	1	
	R1081	D0GB103JA065	10K 1/10W	1	
	R1100	D0GB101JA065	100 1/10W	1	
	R1105	D0GB103JA065	10K 1/10W	1	
	R1106	D0GB334JA065	330K 1/10W	1	
	R1107	D0GB184JA065	180K 1/10W	1	
	R1109	D0GB103JA065	10K 1/10W	1	

Safety	Ref. No.	Part No.	Part Name & Description	Qty	Remarks
	R1116	D0GB103JA065	10K 1/10W	1	
	R1117	D0GB103JA065	10K 1/10W	1	
	R1118	D0GB103JA065	10K 1/10W	1	
	R1119	D0GB103JA065	10K 1/10W	1	
	R1120	D0GB101JA065	100 1/10W	1	
	R1121	D0GB101JA065	100 1/10W	1	
	R1202	ERJ14YJ220U	22 1/2W	1	
	R1203	ERX2LJ39MP	0.39 2W	1	
	R1204	D0GBR00J0004	0 1/10W	1	
	R1204	ERX2LJ39MP	0.39 2W	1	
	R1205	D0GD273JA052	27K 1/8W	1	
	R1209	D0GD103JA052	10K 1/8W	1	
	R1213	D0GBR00J0004	0 1/10W	1	
	R1214	D0GBR00J0004	0 1/10W	1	
	R1217	D1BD6803A066	680K 1/8W	1	
	R1218	D1BD6803A066	680K 1/8W	1	
	R1219	D1BD6803A066	680K 1/8W	1	
	R1222	D1BD6803A066	680K 1/8W	1	
	R1226	D1BB3901A074	3.9K 1/10W	1	
	R1228	D0GB683JA065	68K 1/10W	1	
	R1229	D1BB3301A074	3.3K 1/10W	1	
	R1229	D1BB2201A074	2.2K 1/8W	1	
	R1230	D1BD1802A066	18K 1/8W	1	
	R1233	D1BD4702A066	47K 1/8W	1	
	R1236	D0GB103JA065	10K 1/10W	1	
	R1236	D0GD680JA052	68 1/8W	1	
	R1237	D1BD6803A066	680K 1/8W	1	
	R1238	D1BD6803A066	680K 1/8W	1	
	R1239	D1BD6803A066	680K 1/8W	1	
	R1240	D1BD6803A066	680K 1/8W	1	
	R1242	D1BD4702A066	47K 1/8W	1	
	R1243	D1BD6803A066	680K 1/8W	1	
	R1244	D1BB2702A074	27K 1/10W	1	
	R1245	D0GB102JA065	1K 1/10W	1	
	R1246	D0GB103JA065	10K 1/10W	1	
	R1401	D0GB473JA065	47K 1/10W	1	
	R1402	D0GB561JA065	560 1/10W	1	
	R1403	D0GB101JA065	100 1/10W	1	
	R1404	D0GB472JA065	4.7K 1/10W	1	
	R1405	D0GB473JA065	47K 1/10W	1	
	R1406	D0GB104JA065	100K 1/10W	1	
	R1407	D0GB561JA065	560 1/10W	1	
	R1408	D0GB681JA065	680 1/10W	1	
	R1409	D0GBR00J0004	0 1/10W	1	
	R1411	D0GB153JA065	15K 1/10W	1	
	R1412	D0GB681JA065	680 1/10W	1	
	R1412	D0GD474JA052	470K 1/8W	1	
	R1413	D0GD102JA052	1K 1/8W	1	
	R1414	D0GD103JA052	10K 1/8W	1	
	R1415	D0GZ104JA012	100K 1W	1	
	R1417	D0GF224JA048	220K 1/4W	1	
	R1418	D0GF224JA048	220K 1/4W	1	
	R1419	D0GD220JA052	22 1/8W	1	
	R1420	D0GB221JA065	220 1/10W	1	
	R1420	D0GD824JA052	820K 1/8W	1	
	R1422	D0GBR00J0004	0 1/10W	1	
	R1423	D0GBR00J0004	0 1/10W	1	
	R1424	D0GBR00J0004	0 1/10W	1	
	R1425	D0GBR00J0004	0 1/10W	1	
	R1426	D0GBR00J0004	0 1/10W	1	
	R1501	D1BD4703A066	470K 1/8W	1	
	R1502	D0GB2R2JA065	2.2 1/10W	1	
	R1502	D1BD4703A066	470K 1/8W	1	
	R1503	D1BD4703A066	470K 1/8W	1	
	R1504	D1BD4703A066	470K 1/8W	1	
	R1505	D0GD103JA052	10K 1/8W	1	
	R1507	D0GD224JA052	220K 1/8W	1	
	R1508	D0GB102JA065	1K 1/10W	1	
	R1508	ERJ14YJ4R7U	4.7 1/2W	1	
	R1509	D0GB102JA065	1K 1/10W	1	
	R1509	ERJ14YJ4R7U	4.7 1/2W	1	
	R1510	D0GD470JA052	47 1/8W	1	
	R1511	D0GD330JA052	33 1/8W	1	

Safety	Ref. No.	Part No.	Part Name & Description	Qty	Remarks
	R1512	ERJ14YJ220U	22 1/2W	1	
	R1513	ERJ14YJ220U	22 1/2W	1	
	R1514	D0GD180JA052	18 1/8W	1	
	R1515	D0GD682JA052	6.8K 1/8W	1	
	R1516	D0GD473JA052	47K 1/8W	1	
	R1517	D0GD473JA052	47K 1/8W	1	
	R1518	ERX2SZJR10P	0.1 2W	1	
	R1519	ERX2SZJR10P	0.1 2W	1	
	R1601	D0GD331JA052	330 1/8W	1	
	R1602	D0GB151JA065	150 1/10W	1	
	R1603	D0GB153JA065	15K 1/10W	1	
	R1604	D1BB1002A074	10K 1/10W	1	
	R1605	D0GBR00J0004	0 1/10W	1	
	R1606	D1BB1002A074	10K 1/10W	1	
	R1607	D0GB222JA065	2.2K 1/10W	1	
	R1701	D0GD152JA052	1.5K 1/8W	1	
	R1702	D0GD272JA052	2.7K 1/8W	1	
	R1703	D0GD272JA052	2.7K 1/8W	1	
	R1704	D0GB104JA065	100K 1/10W	1	
	R1705	D0GB103JA065	10K 1/10W	1	
	R1706	D0GD103JA052	10K 1/8W	1	
	R1708	D1BB3302A074	33K 1/10W	1	
	R1709	D0GBR00J0004	0 1/10W	1	
	R1710	D1BB1801A074	1.8K 1/10W	1	
	R1711	D1BB2401A074	2.4K 1/10W	1	
	R1716	D0GD102JA052	1K 1/8W	1	
	R1717	D0GBR00J0004	0 1/10W	1	
	R1721	D1BB2402A074	24K 1/10W	1	
	R1724	D0GD561JA052	560 1/8W	1	
	R1725	D0GB472JA065	4.7K 1/10W	1	
	R1726	D0GB103JA065	10K 1/10W	1	
	R1755	D1BB1002A073	10K 1/10W	1	
	R1756	D1BB1002A073	10K 1/10W	1	
	R1757	D0GD103JA052	10K 1/8W	1	
	R1758	D1BB8201A074	8.2K 1/10W	1	
	R1802	J0JYC0000656	INDUCTOR	1	
	R1803	J0JYC0000656	INDUCTOR	1	
	R1804	J0JYC0000656	INDUCTOR	1	
	R1805	J0JYC0000656	INDUCTOR	1	
	R1806	J0JYC0000656	INDUCTOR	1	
	R1807	J0JYC0000656	INDUCTOR	1	
	R1808	J0JYC0000656	INDUCTOR	1	
	R1809	D0GB102JA065	1K 1/10W	1	
	R1810	J0JYC0000656	INDUCTOR	1	
	R1811	D0GBR00J0004	0 1/10W	1	
	R1812	J0JYC0000656	INDUCTOR	1	
	R1815	D0GB472JA065	4.7K 1/10W	1	
	R1816	J0JYC0000656	INDUCTOR	1	
	R1817	J0JYC0000656	INDUCTOR	1	
	R1818	J0JYC0000656	INDUCTOR	1	
	R1819	J0JYC0000656	INDUCTOR	1	
	R1820	J0JYC0000656	INDUCTOR	1	
	R1821	J0JYC0000656	INDUCTOR	1	
	R1822	D0GBR00J0004	0 1/10W	1	
	R1823	D0GBR00J0004	0 1/10W	1	
	R1843	D0GBR00J0004	0 1/10W	1	
	R1844	D0GBR00J0004	0 1/10W	1	
	R1852	D0GB103JA065	10K 1/10W	1	PS
	R1852	D0GB823JA065	82K 1/10W	1	PN
	R2001	D0GB473JA065	47K 1/10W	1	
	R2002	D0GB473JA065	47K 1/10W	1	
	R2003	D0GB473JA065	47K 1/10W	1	
	R2004	D0GB473JA065	47K 1/10W	1	
	R2005	D0GB473JA065	47K 1/10W	1	
	R2006	D0GB473JA065	47K 1/10W	1	
	R2007	D0GB473JA065	47K 1/10W	1	
	R2101	D0GB681JA065	680 1/10W	1	
	R2102	D0GB473JA065	47K 1/10W	1	
	R2103	D0GB123JA065	12K 1/10W	1	
	R2110	D0GBR00J0004	0 1/10W	1	
	R2117	D0GB681JA065	680 1/10W	1	
	R2118	D0GB473JA065	47K 1/10W	1	
	R2119	D0GB123JA065	12K 1/10W	1	

Safety	Ref. No.	Part No.	Part Name & Description	Qty	Remarks
	R2122	D0GBR00J0004	0 1/10W	1	PS
	R2123	D0GBR00J0004	0 1/10W	1	PN
	R2125	D0GB274JA065	270K 1/10W	1	
	R2126	D0GB823JA065	82K 1/10W	1	
	R2127	D0GB271JA065	270 1/10W	1	
	R2129	D0GB682JA065	6.8K 1/10W	1	
	R2130	D0GB221JA065	220 1/10W	1	
	R2131	D0GF1R0JA048	1.0 1/4W	1	
	R2132	D0GF1R0JA048	1.0 1/4W	1	
	R2133	D0GF1R0JA048	1.0 1/4W	1	
	R2134	D0GF1R0JA048	1.0 1/4W	1	
	R2135	F1H1H104B047	0.1uF 50V	1	
	R2137	D0GB101JA065	100 1/10W	1	
	R2141	D0GB474JA065	470K 1/10W	1	
	R2143	D0AF270JA039	27 1/2W	1	
	R2148	D0GB682JA065	6.8K 1/10W	1	
	R2149	D0GB274JA065	270K 1/10W	1	
	R2150	D0GB823JA065	82K 1/10W	1	
	R2151	D0GB221JA065	220 1/10W	1	
	R2152	F1H1H104B047	0.1uF 50V	1	
	R2153	D0GB474JA065	470K 1/10W	1	
	R2154	D0GB101JA065	100 1/10W	1	
	R2155	D0AF270JA039	27 1/2W	1	
	R2156	D0GB821JA065	820 1/10W	1	
	R2157	D0GB101JA065	100 1/10W	1	
	R2164	D1BB8202A074	82K 1/10W	1	
	R2165	D1BB1003A074	100K 1/10W	1	
	R2166	D1BB1002A074	10K 1/10W	1	
	R2167	D0GB153JA065	15K 1/10W	1	
	R2168	D1BB3002A074	30K 1/10W	1	
	R2175	D1BB1002A074	10K 1/10W	1	
	R2176	D1BB5602A074	56K 1/10W	1	
	R2177	D0GBR00J0004	0 1/10W	1	
	R2178	D0GB274JA065	270K 1/10W	1	
	R2179	D0GB683JA065	68K 1/10W	1	
	R2180	D1BB2702A074	27K 1/10W	1	
	R2181	D0GBR00J0004	0 1/10W	1	
	R2187	J0JGC0000063	INDUCTOR	1	
	R2189	D1BB1002A074	10K 1/10W	1	
	R2190	D1BB4701A074	4.7K 1/10W	1	
	R2191	D1BB3302A074	33K 1/10W	1	
	R2196	D0GB102JA065	1K 1/10W	1	
	R2197	D0GB185JA065	1.8M 1/10W	1	
	R2198	D0GBR00J0004	0 1/10W	1	
	R2200	D0GB472JA065	4.7K 1/10W	1	
	R2201	D0GB472JA065	4.7K 1/10W	1	
	R2202	D0GB103JA065	10K 1/10W	1	
	R2204	D0GZ222JA012	2.2K 1W	1	
	R2208	D0GBR00J0004	0 1/10W	1	
	R2209	D0GBR00J0004	0 1/10W	1	
	R2213	D0GDR00J0004	0 1/8W	1	
	R2215	D0GBR00J0004	0 1/10W	1	
	R2216	D0GBR00J0004	0 1/10W	1	
	R2235	D0GB222JA065	2.2K 1/10W	1	
	R2236	D0GB222JA065	2.2K 1/10W	1	
	R2237	D0GB222JA065	2.2K 1/10W	1	
	R2245	D0GB102JA065	1K 1/10W	1	
	R2248	D0GB4R7JA065	4.7 1/10W	1	
	R3000	D0GB100JA065	10 1/10W	1	
	R3001	D0GB100JA065	10 1/10W	1	
	R3002	D0GB223JA065	22K 1/10W	1	
	R3003	D0GB101JA065	100 1/10W	1	
	R3004	D0GBR00J0004	0 1/10W	1	
	R3007	D0GBR00J0004	0 1/10W	1	
	R3009	D0GB101JA065	100 1/10W	1	
	R3011	D0GB100JA065	10 1/10W	1	
	R3016	D0GBR00J0004	0 1/10W	1	
	R3017	D0GBR00J0004	0 1/10W	1	
	R3018	D0GBR00J0004	0 1/10W	1	
	R3019	D0GBR00J0004	0 1/10W	1	
	R3100	D0GB100JA065	10 1/10W	1	
	R3101	D0GB100JA065	10 1/10W	1	
	R3102	D0GB223JA065	22K 1/10W	1	

Safety	Ref. No.	Part No.	Part Name & Description	Qty	Remarks
	R3103	D0GB101JA065	100 1/10W	1	
	R3104	D0GBR00J0004	0 1/10W	1	
	R3105	D0GB100JA065	10 1/10W	1	
	R3110	D0GBR00J0004	0 1/10W	1	
	R3111	D0GBR00J0004	0 1/10W	1	
	R3112	D0GBR00J0004	0 1/10W	1	
	R3113	D0GBR00J0004	0 1/10W	1	
	R3114	D0GBR00J0004	0 1/10W	1	
	R3115	D0GBR00J0004	0 1/10W	1	
	R3200	D0GB100JA065	10 1/10W	1	
	R3201	D0GB100JA065	10 1/10W	1	
	R3202	D0GB223JA065	22K 1/10W	1	
	R3203	D0GB101JA065	100 1/10W	1	
	R3204	D0GBR00J0004	0 1/10W	1	
	R3205	D0GB100JA065	10 1/10W	1	
	R3210	D0GBR00J0004	0 1/10W	1	
	R3211	D0GBR00J0004	0 1/10W	1	
	R3300	D0GB100JA065	10 1/10W	1	
	R3301	D0GB100JA065	10 1/10W	1	
	R3302	D0GB223JA065	22K 1/10W	1	
	R3303	D0GB101JA065	100 1/10W	1	
	R3304	D0GBR00J0004	0 1/10W	1	
	R3307	D0GBR00J0004	0 1/10W	1	
	R3309	D0GB101JA065	100 1/10W	1	
	R3311	D0GB100JA065	10 1/10W	1	
	R3316	D0GBR00J0004	0 1/10W	1	
	R3317	D0GBR00J0004	0 1/10W	1	
	R3505	D0GB104JA065	100K 1/10W	1	
	R3506	D0GB104JA065	100K 1/10W	1	
	R3507	D0GB3R3JA065	3.3 1/10W	1	
	R3508	D0GB3R3JA065	3.3 1/10W	1	
	R3509	D0GB104JA065	100K 1/10W	1	
	R3510	D0GB104JA065	100K 1/10W	1	
	R3511	D0GB3R3JA065	3.3 1/10W	1	
	R3512	D0GB3R3JA065	3.3 1/10W	1	
	R3513	D0GB104JA065	100K 1/10W	1	
	R3514	D0GB104JA065	100K 1/10W	1	
	R3515	D0GB3R3JA065	3.3 1/10W	1	
	R3516	D0GB3R3JA065	3.3 1/10W	1	
	R3517	D0GB104JA065	100K 1/10W	1	
	R3518	D0GB104JA065	100K 1/10W	1	
	R3519	D0GB3R3JA065	3.3 1/10W	1	
	R3520	D0GB3R3JA065	3.3 1/10W	1	
	R3521	D0GB104JA065	100K 1/10W	1	
	R3522	D0GB104JA065	100K 1/10W	1	
	R3523	D0GB3R3JA065	3.3 1/10W	1	
	R3524	D0GB3R3JA065	3.3 1/10W	1	
	R3525	D0GB104JA065	100K 1/10W	1	
	R3526	D0GB104JA065	100K 1/10W	1	
	R3527	D0GB3R3JA065	3.3 1/10W	1	
	R3528	D0GB3R3JA065	3.3 1/10W	1	
	R3533	D0GB822JA065	8.2K 1/10W	1	
	R3534	D0GB223JA065	22K 1/10W	1	
	R3535	D0GB104JA065	100K 1/10W	1	
	R3536	D0GB104JA065	100K 1/10W	1	
	R3537	D0GB472JA065	4.7K 1/10W	1	
	R3539	D0GB101JA065	100 1/10W	1	
	R3541	D0GB101JA065	100 1/10W	1	
	R3661	D0GDR00J0004	0 1/8W	1	
	R3662	D0GDR00J0004	0 1/8W	1	
	R3663	D0GDR00J0004	0 1/8W	1	
	R3664	D0GDR00J0004	0 1/8W	1	
	R3665	D0GDR00J0004	0 1/8W	1	
	R3666	D0GBR00J0004	0 1/10W	1	
	R3667	D0GBR00J0004	0 1/10W	1	
	R4001	D0GB152JA065	1.5K 1/10W	1	
	R4002	D0GB105JA065	1M 1/10W	1	
	R4003	D0GBR00J0004	0 1/10W	1	
	R4004	D0GBR00J0004	0 1/10W	1	
	R4005	D0GBR00J0004	0 1/10W	1	
	R4006	D0GBR00J0004	0 1/10W	1	
	R4007	D0GB101JA065	100 1/10W	1	
	R4008	D0GB101JA065	100 1/10W	1	

Safety	Ref. No.	Part No.	Part Name & Description		Qty	Remarks
	R4009	D0GB101JA065	100	1/10W	1	
	R4010	D0GB101JA065	100	1/10W	1	
	R4011	D0GB101JA065	100	1/10W	1	
	R4012	D0GB101JA065	100	1/10W	1	
	R4013	D0GB101JA065	100	1/10W	1	
	R4014	D0GB101JA065	100	1/10W	1	
	R4015	D0GB221JA065	220	1/10W	1	
	R4016	D0GB221JA065	220	1/10W	1	
	R4017	D0GB221JA065	220	1/10W	1	
	R4018	D0GB221JA065	220	1/10W	1	
	R4019	D0GB101JA065	100	1/10W	1	
	R4020	D0GB101JA065	100	1/10W	1	
	R4021	D0GB101JA065	100	1/10W	1	
	R4022	D0GB101JA065	100	1/10W	1	
	R4023	D0GB101JA065	100	1/10W	1	
	R4105	D0GB101JA065	100	1/10W	1	
	R5001	D0GDR00J0004	0	1/8W	1	
	R5002	D0GBR00J0004	0	1/10W	1	
	R5003	D0GBR00J0004	0	1/10W	1	
	R5004	D0GBR00J0004	0	1/10W	1	
	R5005	D0GB683JA065	68K	1/10W	1	
	R5006	D0GB683JA065	68K	1/10W	1	
	R5008	D0GB101JA065	100	1/10W	1	
	R5009	D0GB122JA065	1.2K	1/10W	1	
	R5010	D0GB102JA065	1K	1/10W	1	
	R5011	D0GB682JA065	6.8K	1/10W	1	
	R5012	D0GBR00J0004	0	1/10W	1	
	R5013	D0GB473JA065	47K	1/10W	1	
	R5014	D0GBR00J0004	0	1/10W	1	
	R5015	D0GBR00J0004	0	1/10W	1	
	R5016	D0GB104JA065	100K	1/10W	1	
	R5017	D0GBR00J0004	0	1/10W	1	
	R5018	D0GB153JA065	15K	1/10W	1	
	R5019	D0GB4R7JA065	4.7	1/10W	1	
	R5020	D0GB104JA065	100K	1/10W	1	
	R5021	D0GBR00J0004	0	1/10W	1	
	R5022	D0GB101JA065	100	1/10W	1	
	R5023	D0GBR00J0004	0	1/10W	1	
	R5034	D0GB102JA065	1K	1/10W	1	
	R5035	D0GB102JA065	1K	1/10W	1	
	R5036	D0GB102JA065	1K	1/10W	1	
	R5037	D0GDR00J0004	0	1/8W	1	
	R5038	D0GDR00J0004	0	1/8W	1	
	R5041	D0GDR00J0004	0	1/8W	1	
	R5859	D0GD103JA052	10K	1/8W	1	
	R6001	D0GB101JA065	100	1/10W	1	
	R6002	D0GB820JA065	82	1/10W	1	
	R6003	D0GB151JA065	150	1/10W	1	
	R6004	D0GB101JA065	100	1/10W	1	
	R6005	D0GB820JA065	82	1/10W	1	
	R6006	D0GB151JA065	150	1/10W	1	
	R6007	D0GB101JA065	100	1/10W	1	
	R6008	D0GB820JA065	82	1/10W	1	
	R6009	D0GB151JA065	150	1/10W	1	
	R6010	D0GB101JA065	100	1/10W	1	
	R6011	D0GB820JA065	82	1/10W	1	
	R6012	D0GB151JA065	150	1/10W	1	
	R6013	D0GB101JA065	100	1/10W	1	
	R6014	D0GB820JA065	82	1/10W	1	
	R6015	D0GB151JA065	150	1/10W	1	
	R6016	D0GB101JA065	100	1/10W	1	
	R6017	D0GB820JA065	82	1/10W	1	
	R6018	D0GB151JA065	150	1/10W	1	
	R6019	D0GB101JA065	100	1/10W	1	
	R6020	D0GB820JA065	82	1/10W	1	
	R6021	D0GB151JA065	150	1/10W	1	
	R6022	D0GB101JA065	100	1/10W	1	
	R6023	D0GB820JA065	82	1/10W	1	
	R6024	D0GB151JA065	150	1/10W	1	
	R6025	D0GB121JA065	120	1/10W	1	
	R6026	D0GB121JA065	120	1/10W	1	
	R6027	D0GB121JA065	120	1/10W	1	
	R6028	D0GB121JA065	120	1/10W	1	

Safety	Ref. No.	Part No.	Part Name & Description		Qty	Remarks
	R6029	D0GB121JA065	120	1/10W	1	
	R6030	D0GB121JA065	120	1/10W	1	
	R6031	D0GB121JA065	120	1/10W	1	
	R6032	D0GB121JA065	120	1/10W	1	
	R6049	D0GBR00J0004	0	1/10W	1	
	R6050	D0GBR00J0004	0	1/10W	1	
	R6051	D0GBR00J0004	0	1/10W	1	
	R6052	D0GBR00J0004	0	1/10W	1	
	R6053	D0GBR00J0004	0	1/10W	1	
	R6054	D0GBR00J0004	0	1/10W	1	
	R6056	D0GBR00J0004	0	1/10W	1	
	R6058	D0GB102JA065	1K	1/10W	1	
	R6060	D0GB103JA065	10K	1/10W	1	
	R6061	D0GB472JA065	4.7K	1/10W	1	
	R6062	D0GB472JA065	4.7K	1/10W	1	
	R6063	D0GB103JA065	10K	1/10W	1	
	R6064	D0GBR00J0004	0	1/10W	1	
	R6100	D0GB103JA065	10K	1/10W	1	
	R6101	D0GB472JA065	4.7K	1/10W	1	
	R6101	D0GBR00J0004	0	1/10W	1	
	R6102	D0GBR00J0004	0	1/10W	1	
	R6103	D0GBR00J0004	0	1/10W	1	
	R6104	D0GB103JA065	10K	1/10W	1	
	R6104	D0GBR00J0004	0	1/10W	1	
	R6105	D0GB472JA065	4.7K	1/10W	1	
	R6106	D0GB472JA065	4.7K	1/10W	1	
	R6106	D0GB474JA065	470K	1/10W	1	
	R6107	D0GB472JA065	4.7K	1/10W	1	
	R6108	D0GB102JA065	1K	1/10W	1	
	R6108	D0GB474JA065	470K	1/10W	1	
	R6109	D0GB102JA065	1K	1/10W	1	
	R6109	D0GB331JA065	330	1/10W	1	
	R6110	D0GB103JA065	10K	1/10W	1	
	R6110	D0GB331JA065	330	1/10W	1	
	R6111	D0GB103JA065	10K	1/10W	1	
	R6112	D0GB102JA065	1K	1/10W	1	
	R6113	D0GB102JA065	1K	1/10W	1	
	R6114	D0GBR00J0004	0	1/10W	1	
	R6115	D0GBR00J0004	0	1/10W	1	
	R6116	D0GBR00J0004	0	1/10W	1	
	R6117	D0GB103JA065	10K	1/10W	1	
	R6118	D0GB103JA065	10K	1/10W	1	
	R6200	D0GBR00J0004	0	1/10W	1	
	R6201	D0GB182JA065	1.8K	1/10W	1	
	R6202	D0GB122JA065	1.2K	1/10W	1	
	R6203	D0GB182JA065	1.8K	1/10W	1	
	R6204	D0GB222JA065	2.2K	1/10W	1	
	R6205	D0GBR00J0004	0	1/10W	1	
	R6206	D0GB182JA065	1.8K	1/10W	1	
	R6207	D0GB122JA065	1.2K	1/10W	1	
	R6208	D0GB182JA065	1.8K	1/10W	1	
	R6209	D0GB222JA065	2.2K	1/10W	1	
	R6210	D0GB332JA065	3.3K	1/10W	1	
	R6211	D0GB472JA065	4.7K	1/10W	1	
	R6212	D0GB682JA065	6.8K	1/10W	1	
	R6213	D0GB123JA065	12K	1/10W	1	
	R6214	D0GBR00J0004	0	1/10W	1	
	R6215	D0GB182JA065	1.8K	1/10W	1	
	R6216	D0GB122JA065	1.2K	1/10W	1	
	R6217	D0GB182JA065	1.8K	1/10W	1	
	R6218	D0GB222JA065	2.2K	1/10W	1	
	R6219	D0GB332JA065	3.3K	1/10W	1	
	R6220	D0GB472JA065	4.7K	1/10W	1	
	R6221	D0GB682JA065	6.8K	1/10W	1	
	R6222	D0GB123JA065	12K	1/10W	1	
	R6242	D0GBR00J0004	0	1/10W	1	
	R6243	D0GBR00J0004	0	1/10W	1	
	R6244	D0GBR00J0004	0	1/10W	1	
	R6245	D0GB123JA065	12K	1/10W	1	
	R6246	D0GB223JA065	22K	1/10W	1	
	R6247	D0GBR00J0004	0	1/10W	1	
	R6249	D0GBR00J0004	0	1/10W	1	
	R6250	D0GBR00J0004	0	1/10W	1	

Safety	Ref. No.	Part No.	Part Name & Description	Qty	Remarks
	R6251	D0GBR00J0004	0 1/10W	1	
	R6252	D0GB223JA065	22K 1/10W	1	
	R6253	D0GB123JA065	12K 1/10W	1	
	R6254	D0GBR00J0004	0 1/10W	1	
	R6255	D0GBR00J0004	0 1/10W	1	
	R6300	D0GF330JA048	33 1/4W	1	
	R6301	D0GF390JA048	39 1/4W	1	
	R6303	D0GB122JA065	1.2K 1/10W	1	
	R6304	D0GB473JA065	47K 1/10W	1	
	R6306	D0GBR00J0004	0 1/10W	1	
	R6309	D0GBR00J0004	0 1/10W	1	
	R6310	D0GBR00J0004	0 1/10W	1	
	R6311	D0GBR00J0004	0 1/10W	1	
	R6313	D0GB272JA065	2.7K 1/10W	1	
	R6314	D0GB472JA065	4.7K 1/10W	1	
	R6315	D0GB223JA065	22K 1/10W	1	
	R6316	D0GB473JA065	47K 1/10W	1	
	R6320	D0GBR00J0004	0 1/10W	1	
	R6321	D0GBR00J0004	0 1/10W	1	
	R6322	D0GBR00J0004	0 1/10W	1	
	R6323	D0GBR00J0004	0 1/10W	1	
	R6324	D0GBR00J0004	0 1/10W	1	
	R6325	D0GBR00J0004	0 1/10W	1	
	R6326	D0GBR00J0004	0 1/10W	1	
	R6330	D0GBR00J0004	0 1/10W	1	
	R6401	D0GBR00J0004	0 1/10W	1	
	R8040	D0GB474JA065	470K 1/10W	1	
	R8041	D0GB474JA065	470K 1/10W	1	
	R8539	D0GB560JA065	56 1/10W	1	
	R8540	D0GB510JA065	51 1/10W	1	
	R8541	D0GB510JA065	51 1/10W	1	
	R9006	D0GB331JA065	330 1/10W	1	
	R9007	D0GB104JA065	100K 1/10W	1	
	R9008	D0GB301JA065	300 1/10W	1	
	R9009	D0GB104JA065	100K 1/10W	1	
			RESISTOR NET-WORKS		
	RX1003	D1H81014A042	RESISTOR NETWORK	1	
	RX1004	D1H82224A042	RESISTOR NETWORK	1	
	RX5001	D1H81034A042	RESISTOR NETWORK	1	
			CAPACITORS		
	C51	F1H1H102B047	1000pF 50V	1	
	C52	F1H1A474A107	0.47uF 10V	1	
	C61	F1H1H104B047	0.1uF 50V	1	
	C62	F1H1H104B047	0.1uF 50V	1	
	C63	F1H1H6R0B050	6.0pF 50V	1	
	C64	F1H1H3R0B050	3.0pF 50V	1	
	C65	F1H1H3R0B050	3.0pF 50V	1	
	C66	F1H1H330B052	33pF 50V	1	
	C67	F1H1H3R0B050	3.0pF 50V	1	
⚠	C1001	F0CAF104A105	0.1uF	1	
	C1001	F1H1H104B047	0.1uF 50V	1	
	C1002	F1H1H104B047	0.1uF 50V	1	
	C1003	F1H1H104B047	0.1uF 50V	1	
	C1004	F1H1H104B047	0.1uF 50V	1	
	C1005	F1H1H104B047	0.1uF 50V	1	
⚠	C1006	F0CAF224A105	0.22uF	1	
	C1006	F1H1H104B047	0.1uF 50V	1	
⚠	C1007	F1BAF471A215	470pF	1	
	C1007	F1H1H104B047	0.1uF 50V	1	
⚠	C1008	F1BAF471A215	470pF	1	
	C1008	F1H1H104B047	0.1uF 50V	1	
	C1009	F1H1H104B047	0.1uF 50V	1	
	C1010	F1H0J1060006	10uF 6.3V	1	
	C1011	F1H1H104B047	0.1uF 50V	1	
	C1012	F1H1C224A178	0.22uF 16V	1	
	C1013	F1H0J335A005	3.3uF 6.3V	1	
	C1014	F2A1C101A243	100uF 16V	1	
	C1015	F1H1H104B047	0.1uF 50V	1	

Safety	Ref. No.	Part No.	Part Name & Description	Qty	Remarks
	C1016	F1H1H681B052	680pF 50V	1	
	C1017	F2A0J331A183	330uF 6.3V	1	
	C1018	F1H1H104B047	0.1uF 50V	1	
	C1019	F1H1H104B047	0.1uF 50V	1	
	C1020	F1H0J1060006	10uF 6.3V	1	
	C1021	F1H0J1060006	10uF 6.3V	1	
	C1022	F1H0J1060006	10uF 6.3V	1	
	C1023	F1H0J1060006	10uF 6.3V	1	
	C1024	F1H0J1060006	10uF 6.3V	1	
	C1025	F1H0J1060006	10uF 6.3V	1	
	C1026	F1H1H9R0A920	9.0pF 50V	1	
	C1027	F1H1H9R0A920	9.0pF 50V	1	
	C1028	F1H1H220B052	22pF 50V	1	
	C1029	F1H1H270B052	27pF 50V	1	
	C1030	F1H1H101B052	100pF 50V	1	
	C1031	F1H1H102B047	1000pF 50V	1	
	C1032	F1H1H102B047	1000pF 50V	1	
	C1033	F1H1H102B047	1000pF 50V	1	
	C1034	F1H1H102B047	1000pF 50V	1	
	C1035	F1H1H102B047	1000pF 50V	1	
	C1036	F1H1H102B047	1000pF 50V	1	
	C1037	F1H1H104B047	0.1uF 50V	1	
	C1040	F1H1H104B047	0.1uF 50V	1	
	C1041	F1H1H104B047	0.1uF 50V	1	
	C1042	F1H1C224A178	0.22uF 16V	1	
	C1043	F1H1H223B047	0.022uF 50V	1	
	C1046	F1H1H102B047	1000pF 50V	1	
	C1048	F1H1A225A051	2.2uF 10V	1	
	C1049	F1H1H104B047	0.1uF 50V	1	
	C1050	F1H1H104B047	0.1uF 50V	1	
	C1051	F1H0J1060006	10uF 6.3V	1	
	C1052	F1H0J1060006	10uF 6.3V	1	
	C1053	F1H0J4750004	4.7uF 6.3V	1	
	C1201	F0CZZ225A172	2.2uF	1	
	C1201	F1H1H104B047	0.1uF 50V	1	
	C1202	F1H1H104B047	0.1uF 50V	1	
	C1203	F1H1H104B047	0.1uF 50V	1	
	C1203	F1H1H472B047	4700pF 50V	1	
	C1204	F1H1H104B047	0.1uF 50V	1	
	C1205	F1H1H104B047	0.1uF 50V	1	
	C1206	F1H1H103A219	0.01uF 50V	1	
	C1206	F1H1H104B047	0.1uF 50V	1	
	C1207	F1K1E4750002	4.7uF 25V	1	
	C1208	F1H1H472B047	4700pF 50V	1	
	C1209	F1K1H105A251	1uF 50V	1	
	C1211	F1K2J471A014	470pF 630V	1	
	C1214	F1H1H103B047	0.01uF 50V	1	
	C1224	F2B2W2210030	220uF 450V	1	
	C1401	F2A1H4R7A213	4.7uF 50V	1	
	C1402	F1H1H470B052	47pF 50V	1	
	C1403	F2A1HR10A015	0.10uF 50V	1	
	C1403	F2A2W150A189	15uF 450V	1	
	C1404	F1H1H104B047	0.1uF 50V	1	
	C1404	F2A1H4R7A218	4.7uF 50V	1	
	C1405	F1H1H102B047	1000pF 50V	1	
	C1406	F1K2J2220002	2200pF 630V	1	
	C1406	F2A1H1R0A213	1.0uF 50V	1	
	C1407	F1H1H103B047	0.01uF 50V	1	
	C1407	F1K1H105A251	1uF 50V	1	
	C1408	F2A1E221B422	220uF 25V	1	
	C1408	F2A1H1R0A213	1.0uF 50V	1	
⚠	C1409	F1BAF471A215	470pF	1	
	C1409	F1H1H472B047	4700pF 50V	1	
	C1411	F1H1H102B047	1000pF 50V	1	
	C1411	F2A1C100A207	10uF 16V	1	
	C1412	F2A1C1000096	10uF 16V	1	
	C1413	F2A1H1R0A213	1.0uF 50V	1	
	C1415	F2A1HR10A015	0.10uF 50V	1	
	C1417	F1H1H102B047	1000pF 50V	1	
	C1421	F1H1H103B047	0.01uF 50V	1	
	C1422	F1H1H331B052	330pF 50V	1	
	C1423	F1H1H331B052	330pF 50V	1	
	C1441	F1H1H103B047	0.01uF 50V	1	

Safety	Ref. No.	Part No.	Part Name & Description	Qty	Remarks
	C1501	F1H1H104B047	0.1uF 50V	1	
	C1502	F2A1E1010150	100uF 25V	1	
	C1503	F1H1H103B047	0.01uF 50V	1	
	C1503	F1K1E4750002	4.7uF 25V	1	
	C1504	F1H1H103B047	0.01uF 50V	1	
	C1505	F1H1H104B047	0.1uF 50V	1	
	C1506	F1K1C4750023	4.7uF 16V	1	
	C1507	F1H1H104B047	0.1uF 50V	1	
	C1507	F2A1E102B396	1000uF 25V	1	
	C1508	F1J1H152A623	1500pF 50V	1	
	C1509	F1H1H104B047	0.1uF 50V	1	
	C1510	F1K1C1060001	10uF 16V	1	
	C1511	F1J1H103A702	0.01uF 50V	1	
	C1512	F1H1H333B047	0.033uF 50V	1	
	C1513	F1B3D221A132	220pF 2000V	1	
	C1514	F1B3D221A132	220pF 2000V	1	
	C1516	F0C2K683A053	0.068uF 800V	1	
⚠	C1518	F1BAF471A215	470pF	1	
	C1601	F2A1E221B422	220uF 25V	1	
	C1602	F1H1H104B047	0.1uF 50V	1	
	C1604	F1K2J471A014	470pF 630V	1	
	C1701	F1H1H103B047	0.01uF 50V	1	
	C1704	F1H1H104A913	0.1uF 50V	1	
	C1706	F2A1H1020067	1000uF 50V	1	
	C1708	F1H1H223B047	0.022uF 50V	1	
	C1710	F1J2E1030004	0.01uF 250V	1	
	C1712	F1J2E1030004	0.01uF 250V	1	
	C1721	F1H1H103B047	0.01uF 50V	1	
	C1762	F1H1H104B047	0.1uF 50V	1	
	C1763	F1H0J1060006	10uF 6.3V	1	
	C1800	D0GDR00J0004	0 1/8W	1	
	C1803	F1H1H102B047	1000pF 50V	1	
	C1804	F1H1H102B047	1000pF 50V	1	
	C1809	F1H1H102B047	1000pF 50V	1	
	C1810	F1H1H471B052	470pF 50V	1	
	C1811	F1H1H471B052	470pF 50V	1	
	C1822	F1H1H102B047	1000pF 50V	1	
	C1823	F1H1H102B047	1000pF 50V	1	
	C1824	F1H1H102B047	1000pF 50V	1	
	C1825	F1H1H102B047	1000pF 50V	1	
	C1827	F1J1A106A043	10uF 10V	1	
	C1828	F1H1H104B047	0.1uF 50V	1	
	C2001	F1H1H104B047	0.1uF 50V	1	
	C2002	F1H1H104B047	0.1uF 50V	1	
	C2003	F1H1H104B047	0.1uF 50V	1	
	C2004	F1H0J4750004	4.7uF 6.3V	1	
	C2005	F1H1H104B047	0.1uF 50V	1	
	C2006	F1H1H104B047	0.1uF 50V	1	
	C2007	F1H1H104B047	0.1uF 50V	1	
	C2008	F1H1H104B047	0.1uF 50V	1	
	C2009	F1H0J1060006	10uF 6.3V	1	
	C2010	F1H1H105B027	1uF 50V	1	
	C2011	F1H1H105B027	1uF 50V	1	
	C2012	F1H1H104B047	0.1uF 50V	1	
	C2013	F1H1H104B047	0.1uF 50V	1	
	C2100	F1J1A106A024	10uF 10V	1	
	C2101	F1J1A106A024	10uF 10V	1	
	C2104	F1J1A106A024	10uF 10V	1	
	C2108	F1J1A106A024	10uF 10V	1	
	C2113	F2A0J101A181	100uF 6.3V	1	
	C2117	F1H1H104B047	0.1uF 50V	1	
	C2118	F1H1E105A153	1uF 25V	1	
	C2120	F1H1H104B047	0.1uF 50V	1	
	C2121	F1J1A106A024	10uF 10V	1	
	C2124	F2A0J4700054	47uF 6.3V	1	
	C2126	F1H1H104B047	0.1uF 50V	1	
	C2128	F1K1H475A256	4.7uF 50V	1	
	C2129	F1H1E105A153	1uF 25V	1	
	C2130	F2A0J101B034	100uF 6.3V	1	
	C2131	F1H1E105A153	1uF 25V	1	
	C2132	F2A0J4700054	47uF 6.3V	1	
	C2133	F1H1H103B047	0.01uF 50V	1	
	C2134	F1H1H103B047	0.01uF 50V	1	

Safety	Ref. No.	Part No.	Part Name & Description	Qty	Remarks
	C2135	F2A1E221B422	220uF 25V	1	
	C2136	F1H1H103B047	0.01uF 50V	1	
	C2137	F2A1H472C089	4700uF 50V	1	
	C2138	F1H1H102B047	1000pF 50V	1	
	C2139	F1H1H103B047	0.01uF 50V	1	
	C2140	F1H1H470B052	47pF 50V	1	
	C2141	F1K1C2260001	22uF 16V	1	
	C2142	F1K1C2260001	22uF 16V	1	
	C2144	F1H1H104B047	0.1uF 50V	1	
	C2145	F1H1H104B047	0.1uF 50V	1	
	C2148	F1K1H475A256	4.7uF 50V	1	
	C2149	F1K1E1060009	10uF 25V	1	
	C2150	F1H1H103B047	0.01uF 50V	1	
	C2151	F1H1H472B047	4700pF 50V	1	
	C2152	F1H1H104B047	0.1uF 50V	1	
	C2153	F1H1H220B052	22pF 50V	1	
	C2155	F2A1A221B161	220uF 10V	1	
	C2160	F1K1E1060009	10uF 25V	1	
	C2161	F1J1C1060006	10uF 16V	1	
	C2162	F1J1C1060006	10uF 16V	1	
	C2164	F1H1A105A113	1uF 10V	1	
	C2165	F1H1A105A113	1uF 10V	1	
	C2166	F1H1H104B047	0.1uF 50V	1	
	C2167	F1J1A106A024	10uF 10V	1	
	C2168	F1J1A106A024	10uF 10V	1	
	C2170	F1H1H104B047	0.1uF 50V	1	
	C2171	F2A1H4710072	470uF 50V	1	
	C2174	F1H1H104B047	0.1uF 50V	1	
	C2176	F1H1H104B047	0.1uF 50V	1	
	C2177	F1H1H104B047	0.1uF 50V	1	
	C2179	F1H1H104B047	0.1uF 50V	1	
	C2180	F1H1H104B047	0.1uF 50V	1	
	C2181	F1H1H104B047	0.1uF 50V	1	
	C2182	F1H1H104B047	0.1uF 50V	1	
	C2183	F1H1H104B047	0.1uF 50V	1	
	C2187	F1H1H681B052	680pF 50V	1	
	C2188	F1H1H105B027	1uF 50V	1	
	C2189	F1J1C1060006	10uF 16V	1	
	C2190	F1H1H104B047	0.1uF 50V	1	
	C2191	F1H1H104B047	0.1uF 50V	1	
	C2192	F1H1H104B047	0.1uF 50V	1	
	C2193	F1H1H104B047	0.1uF 50V	1	
	C2194	F1H1H104B047	0.1uF 50V	1	
	C3000	F2A1C330B453	33uF 16V	1	
	C3001	F1J1C106A059	10uF 16V	1	
	C3002	F1H1H104B047	0.1uF 50V	1	
	C3003	F1H1H104B047	0.1uF 50V	1	
	C3004	F1H1H104B047	0.1uF 50V	1	
	C3005	F1H1H104B047	0.1uF 50V	1	
	C3006	F1H1H104B047	0.1uF 50V	1	
	C3007	F1H1H104B047	0.1uF 50V	1	
	C3008	F1H1H333B055	0.033uF 50V	1	
	C3009	F1H1H333B055	0.033uF 50V	1	
	C3010	F1H1H104B047	0.1uF 50V	1	
	C3011	F1K1H105A250	1uF 50V	1	
	C3012	F1K1H105A250	1uF 50V	1	
	C3018	F1H1H104B047	0.1uF 50V	1	
	C3019	F1K1H105A250	1uF 50V	1	
	C3020	F1K1H105A250	1uF 50V	1	
	C3026	F1H1H333B055	0.033uF 50V	1	
	C3027	F1H1H333B055	0.033uF 50V	1	
	C3100	F1J1C1060006	10uF 16V	1	
	C3101	F1H1H104B047	0.1uF 50V	1	
	C3102	F1H1H104B047	0.1uF 50V	1	
	C3103	F1H1H104B047	0.1uF 50V	1	
	C3104	F1H1H104B047	0.1uF 50V	1	
	C3105	F1H1H104B047	0.1uF 50V	1	
	C3106	F1H1H104B047	0.1uF 50V	1	
	C3107	F1H1H333B055	0.033uF 50V	1	
	C3108	F1H1H333B055	0.033uF 50V	1	
	C3111	F1H1H104B047	0.1uF 50V	1	
	C3112	F1K1H105A250	1uF 50V	1	
	C3113	F1K1H105A250	1uF 50V	1	

Safety	Ref. No.	Part No.	Part Name & Description	Qty	Remarks
	C3117	F1H1H104B047	0.1uF 50V	1	
	C3118	F1K1H105A250	1uF 50V	1	
	C3119	F1K1H105A250	1uF 50V	1	
	C3122	F1H1H333B055	0.033uF 50V	1	
	C3123	F1H1H333B055	0.033uF 50V	1	
	C3200	F1J1C1060006	10uF 16V	1	
	C3201	F1H1H104B047	0.1uF 50V	1	
	C3202	F1H1H104B047	0.1uF 50V	1	
	C3203	F1H1H104B047	0.1uF 50V	1	
	C3204	F1H1H104B047	0.1uF 50V	1	
	C3205	F1H1H104B047	0.1uF 50V	1	
	C3206	F1H1H104B047	0.1uF 50V	1	
	C3207	F1H1H333B055	0.033uF 50V	1	
	C3208	F1H1H333B055	0.033uF 50V	1	
	C3211	F1H1H104B047	0.1uF 50V	1	
	C3212	F1K1H105A250	1uF 50V	1	
	C3213	F1K1H105A250	1uF 50V	1	
	C3217	F1H1H104B047	0.1uF 50V	1	
	C3218	F1K1H105A250	1uF 50V	1	
	C3219	F1K1H105A250	1uF 50V	1	
	C3222	F1H1H333B055	0.033uF 50V	1	
	C3223	F1H1H333B055	0.033uF 50V	1	
	C3301	F1J1C106A059	10uF 16V	1	
	C3302	F1H1H104B047	0.1uF 50V	1	
	C3303	F1H1H104B047	0.1uF 50V	1	
	C3304	F1H1H104B047	0.1uF 50V	1	
	C3305	F1H1H104B047	0.1uF 50V	1	
	C3306	F1H1H104B047	0.1uF 50V	1	
	C3307	F1H1H104B047	0.1uF 50V	1	
	C3308	F1H1H333B055	0.033uF 50V	1	
	C3309	F1H1H333B055	0.033uF 50V	1	
	C3310	F1H1H104B047	0.1uF 50V	1	
	C3311	F1K1H105A250	1uF 50V	1	
	C3312	F1K1H105A250	1uF 50V	1	
	C3318	F1H1H104B047	0.1uF 50V	1	
	C3319	F1K1H105A250	1uF 50V	1	
	C3320	F1K1H105A250	1uF 50V	1	
	C3326	F1H1H333B055	0.033uF 50V	1	
	C3327	F1H1H333B055	0.033uF 50V	1	
	C3522	F1H1H103B047	0.01uF 50V	1	
	C3523	F1H1H103B047	0.01uF 50V	1	
	C3526	F1H1H103B047	0.01uF 50V	1	
	C3527	F1H1H103B047	0.01uF 50V	1	
	C3530	F1H1H103B047	0.01uF 50V	1	
	C3531	F1H1H103B047	0.01uF 50V	1	
	C3534	F1H1H103B047	0.01uF 50V	1	
	C3535	F1H1H103B047	0.01uF 50V	1	
	C3538	F1H1H103B047	0.01uF 50V	1	
	C3539	F1H1H103B047	0.01uF 50V	1	
	C3542	F1H1H103B047	0.01uF 50V	1	
	C3543	F1H1H103B047	0.01uF 50V	1	
	C3549	F1J1A106A043	10uF 10V	1	
	C3550	F1J1A106A043	10uF 10V	1	
	C3551	F1H1E105A153	1uF 25V	1	
	C3553	ECQV1H105JL3	1uF 50V	1	
	C3554	ECQV1H105JL3	1uF 50V	1	
	C3556	ECQV1H105JL3	1uF 50V	1	
	C3557	ECQV1H105JL3	1uF 50V	1	
	C3558	ECQV1H105JL3	1uF 50V	1	
	C3559	ECQV1H105JL3	1uF 50V	1	
	C3560	ECQV1H105JL3	1uF 50V	1	
	C3561	ECQV1H105JL3	1uF 50V	1	
	C3562	ECQV1H105JL3	1uF 50V	1	
	C3563	ECQV1H105JL3	1uF 50V	1	
	C3565	ECQV1H105JL3	1uF 50V	1	
	C3566	ECQV1H105JL3	1uF 50V	1	
	C3567	F1K2A105A006	1uF 100V	1	
	C3568	F1K2A105A006	1uF 100V	1	
	C4002	F1H0J105A051	1uF 6.3V	1	
	C4003	F1H0J105A051	1uF 6.3V	1	
	C4004	F1H1C474A178	0.47uF 16V	1	
	C4005	F1H1H120B052	12pF 50V	1	
	C4006	F1H1H120B052	12pF 50V	1	

Safety	Ref. No.	Part No.	Part Name & Description	Qty	Remarks
	C4007	F1H0J105A051	1uF 6.3V	1	
	C4008	F1H0J105A051	1uF 6.3V	1	
	C4009	F1H0J105A051	1uF 6.3V	1	
	C4010	F1H1H102B047	1000pF 50V	1	
	C4011	F1H1H102B047	1000pF 50V	1	
	C4012	F1H1H680B052	68pF 50V	1	
	C4017	F1H0J1060012	10uF 6.3V	1	
	C4018	F2A1C470A155	47uF 16V	1	
	C4019	F2A1C220A243	22uF 16V	1	
	C4020	F2A1C220A243	22uF 16V	1	
	C4021	F2A1C2200068	22uF 16V	1	
	C5001	F1J1A106A043	10uF 10V	1	
	C5002	F1H1H103B047	0.01uF 50V	1	
	C5003	F1J1A106A043	10uF 10V	1	
	C5004	F1H1H104B047	0.1uF 50V	1	
	C5007	F1H1H222B047	2200pF 50V	1	
	C5008	F1H1H222B047	2200pF 50V	1	
	C5009	F1J1A106A043	10uF 10V	1	
	C5010	F1H1H103B047	0.01uF 50V	1	
	C5011	F1H1H104B047	0.1uF 50V	1	
	C5012	F1H1H102B047	1000pF 50V	1	
	C5013	F1H1H100B051	10pF 50V	1	
	C5014	F1H1H100B051	10pF 50V	1	
	C5015	F1H1H100B051	10pF 50V	1	
	C5016	F1H1H100B051	10pF 50V	1	
	C5018	F1H1H103B047	0.01uF 50V	1	
	C5019	F2A1A1010072	100uF 10V	1	
	C5020	F2A1A1010132	100uF 10V	1	
	C5021	F2A1A1010132	100uF 10V	1	
	C5022	F1H1H680B052	68pF 50V	1	
	C6001	F1H1C104A178	0.1uF 16V	1	
	C6002	F1H0J1060006	10uF 6.3V	1	
	C6007	F1H1C104A178	0.1uF 16V	1	
	C6012	F1H0J1060006	10uF 6.3V	1	
	C6101	F1H1C104A178	0.1uF 16V	1	
	C6101	F1H1H104B047	0.1uF 50V	1	
	C6102	F1H1H561B052	560pF 50V	1	
	C6103	F1H1H104B047	0.1uF 50V	1	
	C6103	F1H1H561B052	560pF 50V	1	
	C6106	F1H1A105A113	1uF 10V	1	
	C6107	F1H1A105A113	1uF 10V	1	
	C6108	F1H1A105A113	1uF 10V	1	
	C6109	F1H1A105A113	1uF 10V	1	
	C6120	F1H1H221B047	220pF 50V	1	
	C6121	F1H1H221B047	220pF 50V	1	
	C6122	F1H1A105A113	1uF 10V	1	
	C6123	F1H1A105A113	1uF 10V	1	
	C6200	F1H1H101B052	100pF 50V	1	
	C6201	F1H1H101B052	100pF 50V	1	
	C6209	F1H1H101B052	100pF 50V	1	
	C6210	F1H1H101B052	100pF 50V	1	
	C6217	F1H1A105A113	1uF 10V	1	
	C6300	F1J1E105A287	1uF 25V	1	
	C6301	F1J1H105A918	1uF 50V	1	
	C6302	F1J1E105A287	1uF 25V	1	
	C6303	F1H1H104B047	0.1uF 50V	1	
	C6304	F1H1H104B047	0.1uF 50V	1	
	C6305	F2A1V470B125	47uF 35V	1	
	C6306	F1J1E105A287	1uF 25V	1	
	C6307	F1H1H104B047	0.1uF 50V	1	
	C6311	F1H1H105B027	1uF 50V	1	
	C6312	F1H1H105B027	1uF 50V	1	
	C6330	F1H1H105B027	1uF 50V	1	
	C8006	F1J1A106A043	10uF 10V	1	
	C8008	F1J1A106A043	10uF 10V	1	
	C8055	F1J1A106A043	10uF 10V	1	
	C8057	F1J1A106A043	10uF 10V	1	
	C9002	F1H1H102B047	1000pF 50V	1	
	C9004	F1H1H102B047	1000pF 50V	1	
	C9005	F1H1H102B047	1000pF 50V	1	
	C9006	F1H1H102B047	1000pF 50V	1	

MMH1603