PSG1608001CE

# Service Manual

## CD Stereo System

**Model No. SA-AKX100PN**
**SA-AKX100PR**
**SA-AKX100PS**

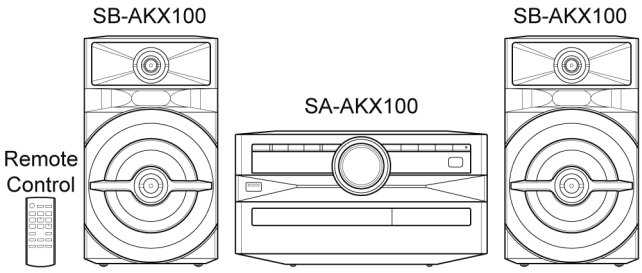


Product Color: (K)...Black Type

**Please refer to the original service manual for:**
- **CD Mechanism Unit (BRS12C) , Order No. PSG1303059AE**
- **Speaker system SB-AKX100PNK, Order No. PSG1608002CE**

### ⚠ WARNING

This service information is designed for experienced repair technicians only and is not designed for use by the general public. It does not contain warnings or cautions to advise non-technical individuals of potential dangers in attempting to service a product. Products powered by electricity should be serviced or repaired only by experienced professional technicians. Any attempt to service or repair the product or products dealt with in this service information by anyone else could result in serious injury or death.

### IMPORTANT SAFETY NOTICE

There are special components used in this equipment which are important for safety. These parts are marked by ⚠ in the Schematic Diagrams, Circuit Board Diagrams, Exploded Views and Replacement Parts List. It is essential that these critical parts should be replaced with manufacturer's specified parts to prevent shock, fire or other hazards. Do not modify the original design without permission of manufacturer.

## TABLE OF CONTENTS


PAGE

**1 Safety Precautions ---------- 3**
- 1.1. General Guidelines ---------- 3
- 1.2. Before Repair and Adjustment ---------- 4
- 1.3. Protection Circuitry ---------- 4
- 1.4. Safety Parts Information ---------- 5

**2 Warning ---------- 6**
- 2.1. Prevention of Electrostatic Discharge (ESD) to Electrostatically Sensitive (ES) Devices ---------- 6
- 2.2. Precaution of Laser Diode ---------- 6
- 2.3. General description about Lead Free Solder (PbF) ---------- 7
- 2.4. Handling Precautions for Traverse Unit ---------- 7
- 2.5. Grounding for electrostatic breakdown prevention ---------- 8

**3 Service Navigation ---------- 9**
- 3.1. Service Information ---------- 9

PAGE

**4 Specifications ---------- 10**

**5 Location of Controls and Components ---------- 11**
- 5.1. Remote Control Key Button Operation ---------- 11
- 5.2. Main Unit Key Button Operation ---------- 12

**6 Service Mode ---------- 13**
- 6.1. Cold-Start ---------- 13
- 6.2. Sales Demonstration Lock Function ---------- 13
- 6.3. Doctor Mode Table ---------- 14
- 6.4. Self-Diagnostic Mode ---------- 16
- 6.5. Self-Diagnostic Error Code Table ---------- 16

**7 Troubleshooting Guide ---------- 18**
- 7.1. No Power or No Display ---------- 18
- 7.2. Bluetooth® Pairing Failure ---------- 18
- 7.3. No Key Function ---------- 18
- 7.4. No Remote Control Function ---------- 19
- 7.5. USB Device Cannot Detect ---------- 19


Panasonic®

© Panasonic Corporation 2016. All rights reserved. Unauthorized copying and distribution is a violation of law.

7.6. No Output Sound ---------- 19
7.7. Check Point ---------- 20
**8 Disassembly and Assembly Instructions ---------- 21**
8.1. Types of Screws ---------- 21
8.2. Disassembly Flow Chart ---------- 22
8.3. Main Components and P.C.B. Locations ---------- 22
8.4. Disassembly of Top Cabinet ---------- 23
8.5. Disassembly of Front Panel Unit ---------- 23
8.6. Disassembly of Panel P.C.B. ---------- 24
8.7. Disassembly of Main P.C.B. ---------- 25
8.8. Disassembly of SMPS Module ---------- 25
8.9. Disassembly of Rear Cabinet ---------- 26
8.10. Disassembly of CD Mechanism Unit ---------- 27
8.11. Disassembly of CD Interface P.C.B. ---------- 28
**9 Service Position ---------- 29**
9.1. Checking of Panel P.C.B. and Main P.C.B. ---------- 29
**10 Block Diagram ---------- 31**
10.1. System Control ---------- 31
10.2. Audio ---------- 32
10.3. Power Supply ---------- 33
**11 Wiring Connection Diagram ---------- 34**
**12 Schematic Diagram ---------- 35**
12.1. Schematic Diagram Notes ---------- 35
12.2. Main (Micon) Circuit (1/2) ---------- 37
12.3. Main (Micon) Circuit (2/2) ---------- 38
12.4. Main (AUX Tuner) Circuit ---------- 39
12.5. Main (DSP), Main (Bluetooth) and CD Interface Circuit ---------- 40
12.6. Main (DAMP) Circuit ---------- 41
12.7. Main (Voltage Regulator) Circuit ---------- 42
12.8. Panel Circuit ---------- 43
**13 Printed Circuit Board ---------- 44**
13.1. Main P.C.B. ---------- 44
13.2. Panel, CD Interface P.C.B. ---------- 45
**14 Voltage and Waveform Measurement ---------- 47**
14.1. Voltage Measurement ---------- 47
**15 Exploded View and Replacement Parts List ---------- 51**
15.1. Cabinet Parts Location 1 ---------- 51
15.2. Packaging ---------- 52
15.3. Mechanical Replacement Part List ---------- 53
15.4. Electrical Replacement Parts List ---------- 55

A6355029

# 1 Safety Precautions

## 1.1. General Guidelines

1. **IMPORTANT SAFETY NOTICE**
   There are special components used in this equipment which are important for safety. These parts are marked by ⚠ in the Schematic Diagrams, Circuit Board Layout, Exploded Views and Replacement Parts List. It is essential that these critical parts should be replaced with manufacturer's specified parts to prevent X-RADIATION, shock, fire, or other hazards. Do not modify the original design without permission of manufacturer.
2. An Isolation Transformer should always be used during the servicing of AC Adaptor whose chassis is not isolated from the AC power line. Use a transformer of adequate power rating as this protects the technician from accidents resulting in personal injury from electrical shocks. It will also protect AC Adaptor from being damaged by accidental shorting that may occur during servicing.
3. When servicing, observe the original lead dress. If a short circuit is found, replace all parts which have been overheated or damaged by the short circuit.
4. After servicing, see to it that all the protective devices such as insulation barriers, insulation papers shields are properly installed.
5. After servicing, make the following leakage current checks to prevent the customer from being exposed to shock hazards.

### 1.1.1. Leakage Current Cold Check

1. Unplug the AC cord and connect a jumper between the two prongs on the plug.
2. Measure the resistance value, with an ohmmeter, between the jumpered AC plug and each exposed metallic cabinet part on the equipment such as screwheads, connectors, control shafts, etc. When the exposed metallic part has a return path to the chassis, the reading should be between 1MΩ and 5.2MΩ.
   When the exposed metal does not have a return path to the chassis, the reading must be ∞

### 1.1.2. Leakage Current Hot Check

1. Plug the AC cord directly into the AC outlet. Do not use an isolation transformer for this check.
2. Connect a 1.5kΩ, 10 watts resistor, in parallel with a 0.15μF capacitors, between each exposed metallic part on the set and a good earth ground such as a water pipe, as shown in Figure 1-1.
3. Use an AC voltmeter, with 1000 ohms/volt or more sensitivity, to measure the potential across the resistor.
4. Check each exposed metallic part, and measure the voltage at each point.
5. Reverse the AC plug in the AC outlet and repeat each of the above measurements.
6. The potential at any point should not exceed 0.75 volts RMS. A leakage current tester (Simpson Model 229 or equivalent) may be used to make the hot checks, leakage current must not exceed 1/2 milliamp. In case a measurement is outside of the limits specified, there is a possibility of a shock hazard, and the equipment should be repaired and rechecked before it is returned to the customer.

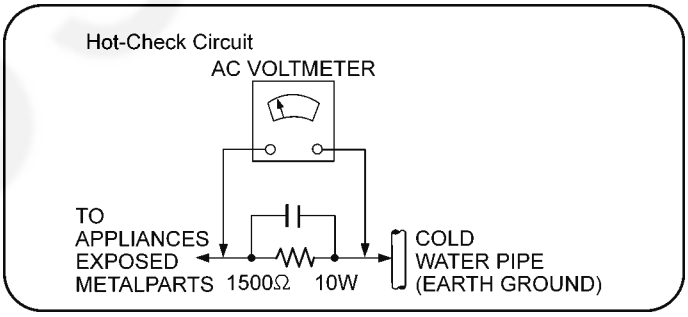


Figure 1-1

## 1.2. Before Repair and Adjustment

Disconnect AC power to discharge AC capacitor (in SMPS Module) as indicate below diagram through a 10 Ω, 10 W resistor to ground.

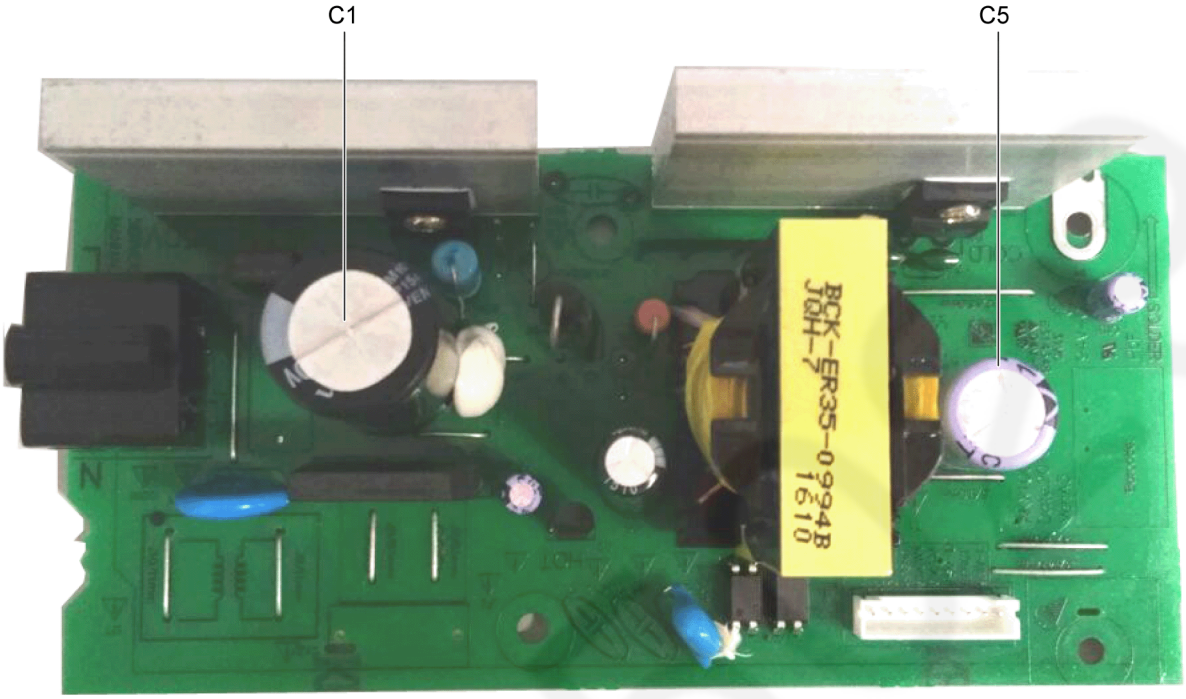


**Caution:**

DO NOT SHORT-CIRCUIT DIRECTLY (with a screwdriver blade, for instance), as this may destroy solid state devices.

After repairs are completed, restore power gradually using a variac to avoid overcurrent.

Current consumption at AC 120 V, 60 Hz in Power ON, FM Tuner at volume minimal mode should be ~ 350 mA (for PN).

Current consumption at AC 220~240 V, 50/60 Hz in Power ON, FM Tuner at volume minimal mode should be ~ 350 mA (for PR/PS).

## 1.3. Protection Circuitry

The protection circuitry may have operated if either of the following conditions are noticed:

- No sound is heard when the power is turned on.
- Sound stops during a performance.

The function of this circuitry is to prevent circuitry damage if, for example, the positive and negative speaker connection wires are “shorted”, or if speaker systems with an impedance less than the indicated rated impedance of the amplifier are used.

If this occurs, follow the procedure outlines below:

1. Turn off the power.
2. Determine the cause of the problem and correct it.
3. Turn on the power once again after one minute.

**Note:**

When the protection circuitry functions, the unit will not operate unless the power is first turned off and then on again.

## 1.4. Safety Parts Information

**Safety Parts List:**

There are special components used in this equipment which are important for safety.

These parts are marked by ⚠ in the Schematic Diagrams, Exploded View & Replacement Parts List. It is essential that these critical parts should be replaced with manufacturer's specified parts to prevent shock, fire or other hazards. Do not modify the original design without permission of manufacturer.

| Safety | Ref No. | Part No. | Part Name & Description | Remarks |
|---|---|---|---|---|
| ⚠ | 7 | TKFA22101 | TOP CABINET | |
| ⚠ | 10 | TKFE35001 | REAR CABINET | PN |
| ⚠ | 11 | TBMK4271 | NAME PLATE | PS |
| ⚠ | 11 | TBMK4271A | NAME PLATE | PR |
| ⚠ | 301 | TXQ0011 | TRAVERSE ASS'Y | (E.S.D) |
| ⚠ | A2 | K2CA2YY00039 | AC CORD | PR |
| ⚠ | A2 | K2CB2CB00022 | AC CORD | PN |
| ⚠ | A2 | K2CQ2YY00119 | AC CORD | PS |
| ⚠ | A3 | TQBJ0967 | O/I (En/Sp) | |
| ⚠ | PCB4 | N0AE1GN00002 | SMPS MODULE | PN |
| ⚠ | PCB4 | N0AE1GN00003 | SMPS MODULE | PS,PR |

A8935029

# 2 Warning

## 2.1. Prevention of Electrostatic Discharge (ESD) to Electrostatically Sensitive (ES) Devices

Some semiconductor (solid state) devices can be damaged easily by static electricity. Such components commonly are called Electrostatically Sensitive (ES) Devices.

Examples of typical ES devices are IC (integrated circuits) and some field-effect transistors and semiconductor "chip" components.

The following techniques should be used to help reduce the incidence of component damage caused by electrostatic discharge (ESD).

1. Immediately before handling any semiconductor component or semiconductor-equipped assembly, drain off any ESD on your body by touching a known earth ground. Alternatively, obtain and wear a commercially available discharging ESD wrist strap, which should be removed for potential shock reasons prior to applying power to the unit under test.
2. After removing an electrical assembly equipped with ES devices, place the assembly on a conductive surface such as aluminum foil, to prevent electrostatic charge buildup or exposure of the assembly.
3. Use only a grounded-tip soldering iron to solder or unsolder ES devices.
4. Use only an anti-static solder removal device. Some solder removal devices not classified as “anti-static (ESD protected)” can generate electrical charge sufficient to damage ES devices.
5. Do not use freon-propelled chemicals. These can generate electrical charges sufficient to damage ES devices.
6. Do not remove a replacement ES device from its protective package until immediately before you are ready to install it. (Most replacement ES devices are packaged with leads electrically shorted together by conductive foam, aluminum foil or comparable conductive material).
7. Immediately before removing the protective material from the leads of a replacement ES device, touch the protective material to the chassis or circuit assembly into which the device will be installed.
   **CAUTION:**
   Be sure no power is applied to the chassis or circuit, and observe all other safety precautions.
8. Minimize bodily motions when handling unpackaged replacement ES devices. (Otherwise harmless motion such as the brushing together of your clothes fabric or the lifting of your foot from a carpeted floor can generate static electricity (ESD) sufficient to damage an ES device).

**IMPORTANT SAFETY NOTICE**

There are special components used in this equipment which are important for safety. These parts are marked by ⚠ in the Schematic Diagrams, Circuit Board Diagrams, Exploded Views and Replacement Parts List. It is essential that these critical parts should be replaced with manufacturer's specified parts to prevent shock, fire or other hazards. Do not modify the original design without permission of manufacturer.

## 2.2. Precaution of Laser Diode

**CAUTION:**
THIS PRODUCT UTILIZES A LASER.
USE OF CONTROLS OR ADJUSTMENTS OR PERFORMANCE OF PROCEDURES OTHER THAN THOSE SPECIFIED HEREIN MAY RESULT IN HAZARDOUS RADIATION EXPOSURE.

**Caution:**

This product utilizes a laser diode with the unit turned “on”, invisible laser radiation is emitted from the pickup lens.
Wavelength: 790 nm (CD)
Maximum output radiation power from pickup: 100 μW/VDE
Laser radiation from the pickup unit is safety level, but be sure the followings:

1. Do not disassemble the pickup unit, since radiation from exposed laser diode is dangerous.
2. Do not adjust the variable resistor on the pickup unit. It was already adjusted.
3. Do not look at the focus lens using optical instruments.
4. Recommend not to look at pickup lens for a long time.

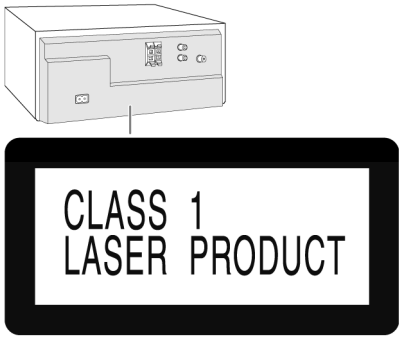


Figure 2-1

## 2.3. General description about Lead Free Solder (PbF)

The lead free solder has been used in the mounting process of all electrical components on the printed circuit boards used for this equipment in considering the globally environmental conservation.

The normal solder is the alloy of tin (Sn) and lead (Pb). On the other hand, the lead free solder is the alloy mainly consists of tin (Sn), silver (Ag) and Copper (Cu), and the melting point of the lead free solder is higher approx.30 degrees C (86°F) more than that of the normal solder.

**Definition of PCB Lead Free Solder being used**

| | |
|---|---|
| The letter of “PbF” is printed either foil side or components side on the PCB using the lead free solder.<br>(See right figure) | PbF |

**Service caution for repair work using Lead Free Solder (PbF)**

- The lead free solder has to be used when repairing the equipment for which the lead free solder is used.
  (Definition: The letter of “PbF” is printed on the PCB using the lead free solder.)
- To put lead free solder, it should be well molten and mixed with the original lead free solder.
- Remove the remaining lead free solder on the PCB cleanly for soldering of the new IC.
- Since the melting point of the lead free solder is higher than that of the normal lead solder, it takes the longer time to melt the lead free solder.
- Use the soldering iron (more than 70W) equipped with the temperature control after setting the temperature at 350±30 degrees C (662±86°F).

**Recommended Lead Free Solder (Service Parts Route.)**

- The following 3 types of lead free solder are available through the service parts route.
  RFKZ03D01K----------(0.3mm 100g Reel)
  RFKZ06D01K----------(0.6mm 100g Reel)
  RFKZ10D01K----------(1.0mm 100g Reel)

**Note**

* Ingredient: tin (Sn), 96.5%, silver (Ag) 3.0%, Copper (Cu) 0.5%, Cobalt (Co) / Germanium (Ge) 0.1 to 0.3%

## 2.4. Handling Precautions for Traverse Unit

The laser diode in the optical pickup unit may break down due to static electricity of clothes or human body. Special care must be taken avoid caution to electrostatic breakdown when servicing and handling the laser diode in the traverse unit.

### 2.4.1. Cautions to Be Taken in Handling the Optical Pickup Unit

The laser diode in the optical pickup unit may be damaged due to electrostatic discharge generating from clothes or human body. Special care must be taken avoid caution to electrostatic discharge damage when servicing the laser diode.

1. Do not give a considerable shock to the optical pickup unit as it has an extremely high-precise structure.
2. To prevent the laser diode from the electrostatic discharge damage, the flexible cable of the optical pickup unit removed should be short-circuited with a short pin or a clip.
3. The flexible cable may be cut off if an excessive force is applied to it. Use caution when handling the flexible cable.
4. The antistatic FFC is connected to the new optical pickup unit. After replacing the optical pickup unit and connecting the flexi-

ble cable, cut off the antistatic FFC.

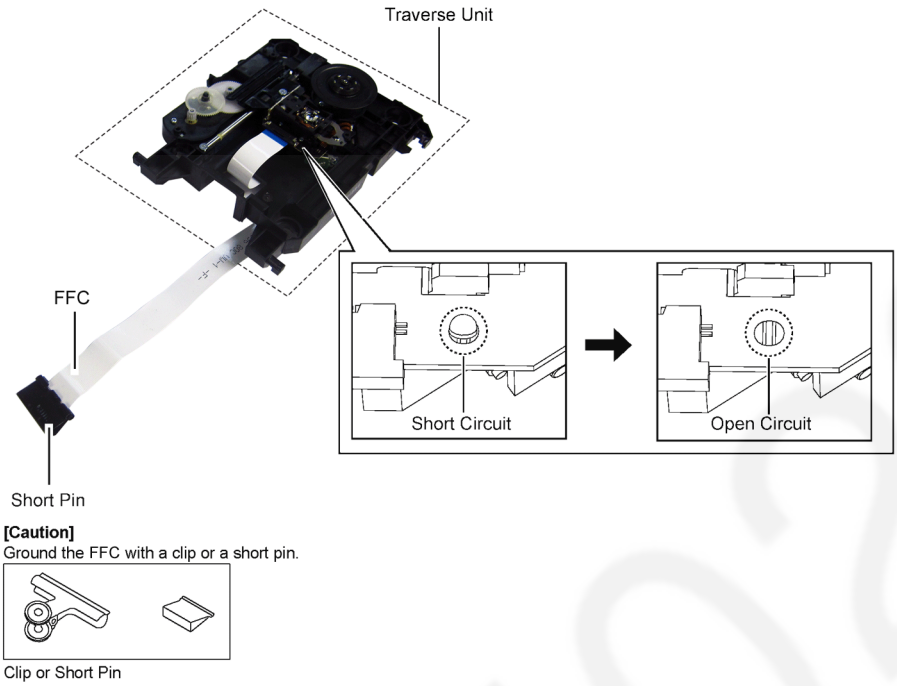


Figure 2-2

## 2.5. Grounding for electrostatic breakdown prevention

- As for parts that use optical pick-up (laser diode), the optical pick-up is destroyed by the static electricity of the working environment.
  Repair in the working environment that is grounded.

### 2.5.1. Worktable grounding

- Put a conductive material (sheet) or iron sheet on the area where the optical pickup is placed and ground the sheet.

### 2.5.2. Human body grounding

- Use the anti-static wrist strap to discharge the static electricity form your body (Figure 2-3).

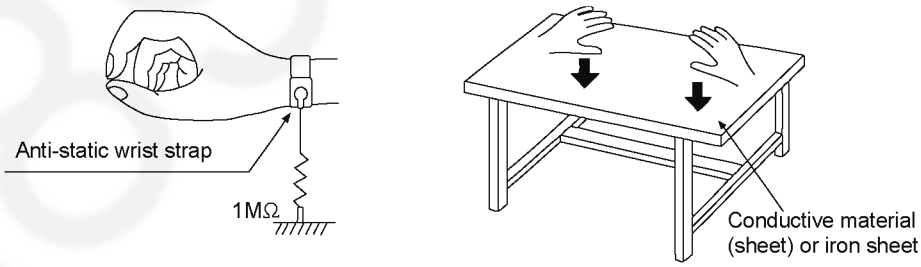


Figure 2-3

# 3 Service Navigation

## 3.1. Service Information

This service manual contains technical information which will allow service personnel's to understand and service this model.
Please place orders using the parts list and not the drawing reference numbers.
If the circuit is changed or modified, this information will be followed by supplement service manual to be filed with original service manual.

### 3.1.1. Software Update Procedure

UPDATE PROCEDURE

Perform the following steps.
- Step 1: Preparing the USB device
- Step 2: Software Update

Step 1: Preparing the USB device

Before start creating the update USB, it is nessesary to check the update file.
It is important to use the correct file otherwise USB version up process will not working.

Note: Please do not rename the file as the updation process will look for above naming. If different name, version up process will not work.

To create USB update, copy the desired FRM file (depends on model) into USB.
Please make sure there is no other file inside the USB device.

Step 2: Software Update

<Caution>
► During the update process, do not disconnect the AC power supply cord.
► Do not press any buttons, except as instructed. Failure to do so may result in the set becoming unresponsive which will require repair.

Step:
► Set need to be turn ON in order to support USB update process.
► Go to USB selector until the display show "NODEVICE".
1. Insert USB device (With FRM file inside)
2. During the update process, the below message will shown on the display.

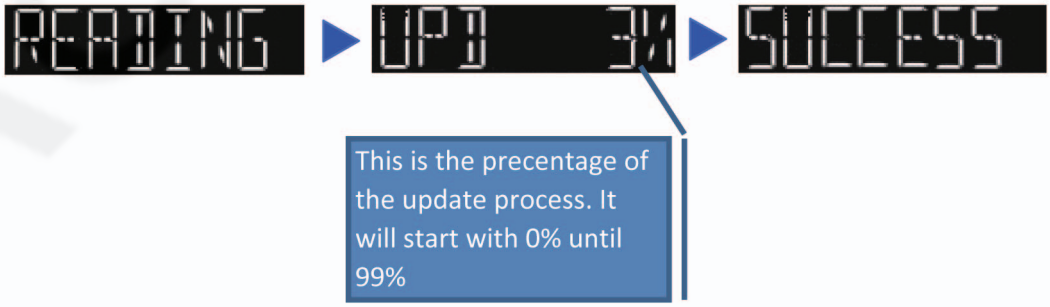


3. When "SUCCESS" display appear, unplug USB then ac out supply. Firmware updation process completed.

# 4 Specifications

■ **Amplifier section**

**RMS output power stereo mode**

| | |
|---|---|
| Front Ch (both ch driven) | 150 W per channel (4 Ω), 1 kHz, 30% THD |
| Total RMS stereo mode power | 300 W |

■ **Tuner, terminals section**

| | |
|---|---|
| **Preset memory** | FM 30 stations |

**Frequency modulation (FM)**

| | |
|---|---|
| Frequency range | 87.50 MHz to 108.00 MHz (50 kHz step) (for PN)<br>87.5 MHz to 108.0 MHz (100 kHz step) (for PR/PS)<br>87.9 MHz to 107.9 MHz (200 kHz step) (for PR/PS) |
| Antenna terminals | 75 Ω (unbalanced) |

**Analog audio input**

| | |
|---|---|
| Audio input | Pin jack (1 system) |

■ **Disc section**

| | |
|---|---|
| **Discs played (8 cm or 12 cm)** | CD, CD-R/RW (CD-DA, MP3*) |

* MPEG-1 Layer 3

**Pick up**

| | |
|---|---|
| Wavelength | 790 nm (CD) |

■ **USB section**

**USB Port**

| | |
|---|---|
| USB standard | USB 2.0 full speed |
| Media file format support | MP3 (*.mp3) |
| USB device file system | FAT12, FAT16, FAT32 |

**USB recording**

| | |
|---|---|
| Bit rate | 128 kbps |
| USB recording speed | 1x, 3x (CD only) |
| Recording file format | MP3 (*.mp3) |

■ **Bluetooth® section**

| | |
|---|---|
| **Version** | Bluetooth® Ver.2.1 + EDR |
| **Class** | Class 2 |
| **Supported profiles** | A2DP, AVRCP, SPP, FTP |
| **Operating frequency** | 2.4 GHz band, FH-SS |
| **Operating distance** | 10 m line of sight |

■ **General**

| | |
|---|---|
| **Power supply** | AC 120 V, 60 Hz (for PN)<br>AC 220 to 240 V, 50/60 Hz (for PR/PS) |
| **Power consumption** | 49 W |
| **Dimensions (W x H x D)** | 250 mm x 132 mm x 227 mm |
| **Mass** | 1.7 kg |
| **Operating temperature range** | 0 °C to +40 °C |
| **Operating humidity range** | 35% to 80% RH (no condensation) |
| **Power Consumption in standby mode (approximate)** | 0.5 W |
| **Power Consumption in standby mode (approximate)** (With "BLUETOOTH STANDBY" set to "ON") | 0.6 W |

Note:

1. Specifications are subject to change without notice. Mass and dimension are appropriate
2. Total harmonic distortion is measured by the digital spectrum analyzer.

■ **System: SC-AKX100PN**

Main Unit: SA-AKX100PN
Speakers: SB-AKX100PN

■ **System: SC-AKX100PR**

Main Unit: SA-AKX100PR
Speakers: SB-AKX100PN

■ **System: SC-AKX100PS**

Main Unit: SA-AKX100PS
Speakers: SB-AKX100PN

# 5 Location of Controls and Components

## 5.1. Remote Control Key Button Operation

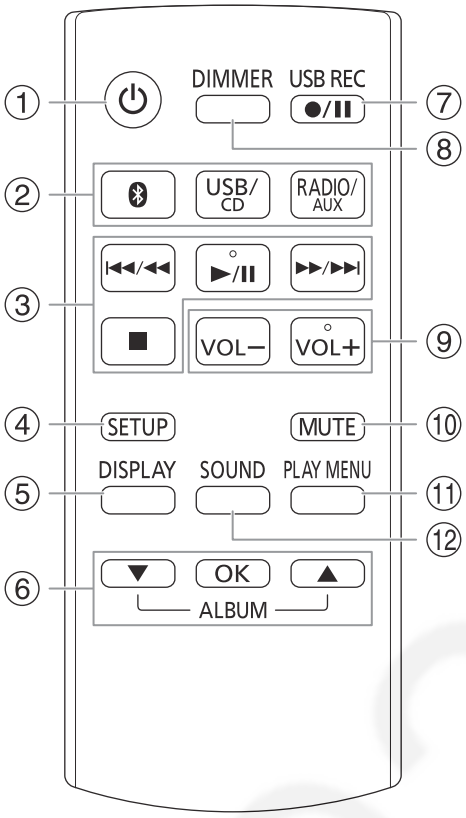


① **Standby/on switch [⏻], [⏻/I]**
Press to switch the unit from on to standby mode or vice versa. In standby mode, the unit is still consuming a small amount of power.

② **Select the audio source**
On the main unit:
To start Bluetooth® pairing, press and hold [ᛒ].

③ Basic playback control

④ View the setup menu

⑤ View the content information

⑥ Select or confirm the option

⑦ Recording operation control

⑧ **Decrease the brightness of the display panel**
The illumination is also switched off.
To cancel, press the button again.

⑨ Adjust the volume level

⑩ **Mute the sound**
To cancel, press the button again.
“MUTE” is also canceled when you adjust the volume or when you switch off the system.

⑪ View the play menu

⑫ Select the sound effects

## 5.2. Main Unit Key Button Operation

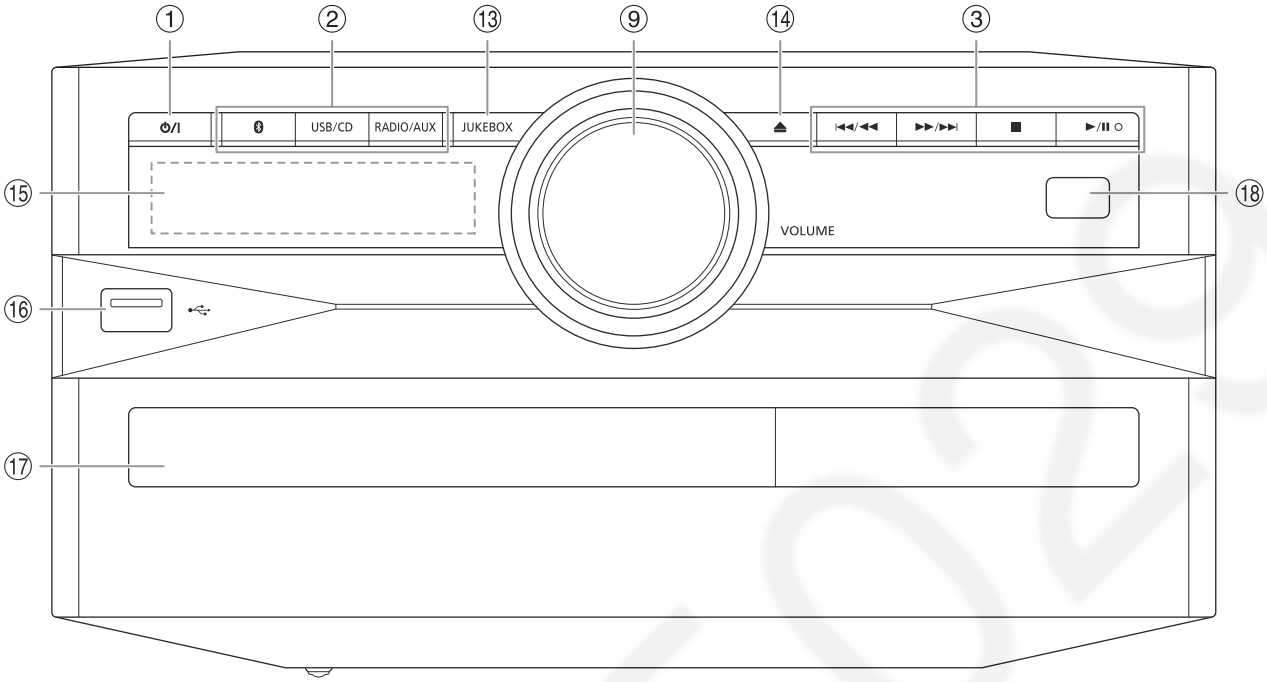


① **Standby/on switch [⏻], [⏻/I]**
Press to switch the unit from on to standby mode or vice versa. In standby mode, the unit is still consuming a small amount of power.

② **Select the audio source**
On the main unit:
To start Bluetooth® pairing, press and hold [ᛒ].

③ Basic playback control

⑨ Adjust the volume level

⑬ Select the jukebox

⑭ Open or close the disc tray

⑮ Display panel

⑯ USB port (⭠)

⑰ Disc tray

⑱ **Remote control sensor**
Distance: Within approximately 7 m
Angle: Approximately 20° up and down, 30° left and right

# 6 Service Mode

Remote control with numeric button (Example: N2QAYB001019 (AKX220))

## 6.1. Cold-Start

| Item | | FL Display | Key Operation |
|---|---|---|---|
| Mode Name | Description | | Front Key |
| Cold Start | To carry out cold-start or initialize to shipping mode | _ _ _ _ _ _ _ _ _ _ | 1. Unplug AC power cord.<br>2. Press & hold [POWER] button.<br>3. Plug in AC power cord while [POWER] button being pressed.<br>4. Release [POWER] button. |

## 6.2. Sales Demonstration Lock Function

| Item | | FL Display | Key Operation |
|---|---|---|---|
| Mode Name | Description | | Front Key |
| Entering into Sales Demonstration Lock Mode | To enter into the sales demonstration lock mode. | -- --LOCK-- -- | 1. Turn on the unit.<br>2. Select to any mode function.<br>3. Press and hold [▲OPEN/CLOSE] and [USB/CD] keys for 5 sec or more.<br><br>The display will show upon entering into this mode for 2 sec.<br><br>Note: [▲OPEN/CLOSE] button is invalid and the main unit displays "LOCK" while the lock function mode is entered. |
| Cancellation of Sales Demonstration Lock Mode | To cancel the sales demonstration lock mode. | --UNLOCK-- | 1. Turn on the unit.<br>2. Select to CD mode function.<br>3. Set volume to Vol 19.<br>4. Press and hold [▲OPEN/CLOSE] and [USB/CD] keys for 5 sec or more.<br><br>The display will show upon entering into this mode for 2 sec. |

# 6.3. Doctor Mode Table

## 6.3.1. Doctor Mode Table 1

| Item | | FL Display | Key Operation |
|---|---|---|---|
| Mode Name | Description | | Front Key |
| Doctor Mode | To enter into Doctor Mode | NO DISC | In CD Mode:<br>1. Press [■] button on main unit follow by [4] and [7] on remote control.<br><br>2. To exit, press [DELETE] button on remote control or, press [POWER,⏻/I] button on Main Unit |
| EEPROM checksum check | Displaying of<br>1. Year Develop.<br>2. Model Type.<br>3. ROM Type.<br>4. Firmware Version. | (Display 1)<br>C_IM_ V V V<br>C0_01_ 1 1 1<br>① ② ③ ④ (Decimal)<br><br>Version No. (001 ~ 999) →specific for each firmware | In CD mode:<br>1. Enter into Doctor Mode |
| Cold Start | To active cold start upon next AC power up when reset start is execute the next time. | -<br>-- -- -- -- -- -- -- --<br>- | In Doctor Mode:<br>1. Press [4] button on the remote control. |

## 6.3.2. Doctor Mode Table 2

| Item | | FL Display | Key Operation |
|---|---|---|---|
| Mode Name | Description | | Front Key |
| Volume Setting Check | To check the volume setting of the main unit. | VOL: ### <br> Volume <br> Press [7]: VOL50 <br> Press [8]: VOL35 <br> Press [9]: VOL0 | In Doctor Mode: <br> 1. Press [7], [8], [9] button on the remote control. <br> 2. To cancel this mode, press [0] button on the remote control. |
| FL Display Check | To check the FL segment display. <br> All segments will light up while all LED blink at 0.5s intervals. | 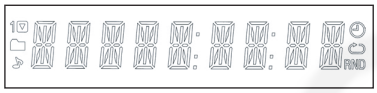 | In Doctor mode: <br> 1. Press [1] button on the remote control. <br> 2. To cancel this mode, press [0] button on the remote control. |
| Traverse Test | To determine the traverse unit operation for inner & outer access track. <br><br> In this mode, ensure the CD is in the main unit. | 00000000 <br> The counter will increment by one. When reach 99999999 will change to 00000000 <br> Cancellation Display <br> CANCEL | In Doctor Mode: <br> 1. Press [10]→[1]→[2] button on the remote control. <br><br> 2. To cancel this mode, press [0] button on the remote control. |
| Reliability Test (Combination) | To determine the traverse unit operation & open/close operation of the mechanism. <br><br> In this mode, ensure the CD is in the main unit. | 00000000 <br> The counter will increment by one. When reach 99999999 will change to 00000000 <br> Cancellation Display <br> CANCEL | In Doctor Mode: <br> 1. Press [10]→[1]→[5] button on the remote control. <br><br> 2. To cancel this mode, press [0] button on the remote control. |
| Loading Test | To determine the open & close operation of the CD Mechanism Unit. <br><br> In this mode, the tray will open & close automatically. | 00000000 <br> The counter will increment by one. When reach 99999999 will change to 00000000 <br> Cancellation Display <br> CANCEL | In Doctor Mode: <br> 1. Press [10]→[2]→[1] button on the remote control. <br><br> 2. To cancel this mode, press [0] button on the remote control. |

## 6.4. Self-Diagnostic Mode

| Item | | FL Display | Key Operation |
|---|---|---|---|
| Mode Name | Description | | Front Key |
| Self Diagnostic Mode | To enter into self diagnostic checking | | Step 1: Select CD mode (Ensure no disc is inserted).<br>Step 2: Press & hold [■] button follow by [▶▶/▶▶I] on main unit for 2 seconds. |
| Error Code Information | System will perform a check on any unusual/error code from the memory | Example: F61 | Step 1: In self diagnostic mode, Press [■] on main unit.<br>To exit, press [⏻/I] on main unit or remote control. |
| Delete error code | To clear the stored in memory (EEPROM IC) | CLEAR | Step 1: In self diagnostic mode, Press [0] on remote control.<br>To exit, press [⏻/I] on main unit or remote control. |

## 6.5. Self-Diagnostic Error Code Table

Self-Diagnostic Function provides information on any problems occurring for the unit and its respective components by displaying the error codes. These error code such as U**, H** and F** are stored in memory and held unless it is cleared.
The error code is automatically display after entering into self-diagnostic mode.

### 6.5.1. Power Supply Error Code Table

| Item | | FL Display | Key Operation | Solution (PCB exchange repair) |
|---|---|---|---|---|
| Mode Name | Description | | Front Key | |
| Error Code F61 | Diagnosis Contents: Power Amp IC output abnormal.<br>Upon power on, PCONT=HIGH, DC_DET_AMP after checking LSI. | F61 | Press [■] on main unit for next error. | Check main (IC6000). |
| Error Code F76 | Diagnosis Contents: Power Amp IC output abnormal.<br>DC_DET_PWR. | F76 | Press [■] on main unit for next error. | Check SMPS P.C.B. (Main Q1011 / IC1000). |
| Error Code F61-76 | Diagnosis Contents: Power Amp IC output abnormal.<br>Both DCDET (NG). | F61--F76 | Press [■] on main unit for next error. | DAMP and power supply abnormal. |

## 6.5.2. CD Mechanism Error Code Table

| Item | | FL Display | Key Operation | Solution (PCB exchange repair) |
|---|---|---|---|---|
| Mode Name | Description | | Front Key | |
| Error Code CD H15 | Diagnosis Contents: CD Open Abnormal.<br><br>During operation POS_SW_R On fail to be detected within 4 sec.<br>Error No. shall be clear by force or during cold start. | CD H15 | Press [■] on main unit for next error. | Check following:<br>1. CD Interface P.C.B. (Pin 3, 4, 6)<br>2. SOC IC (IC2001) |
| Error Code CD H16 | Diagnosis Contents: CD Closing Abnormal.<br>During operation POS_SW_CEN<br>On fail to be detected within 4 sec.<br>Error No. shall be clear by force | CD H16 | Press [■] on main unit for next error. | Check following:<br>1. CD Interface P.C.B. (Pin 6, 3, 4)<br>2. SOC IC (IC2001) |

## 6.5.3. Bluetooth Error Code Table

| Item | | FL Display | Key Operation | Solution (PCB exchange repair) |
|---|---|---|---|---|
| Mode Name | Description | | Front Key | |
| Error Code F703 | Diagnosis Contents: Bluetooth Communication.<br><br>Communication between Bluetooth module and micro-p abnormal. | F703 | Press [■] on main unit for next error. | Check following:<br>1. Bluetooth P.C.B.<br>2. SOC IC on Main P.C.B. |
| Error Code F77 | Diagnosis Contents: Bluetooth Address Error<br><br>If there is no valid Bluetooth address stored in the EEPROM IC. | F77 | Press [■] on main unit for next error. | Check following:<br>1. EEPROM IC (IC2002) on Main P.C.B. |

# 7 Troubleshooting Guide

## 7.1. No Power or No Display

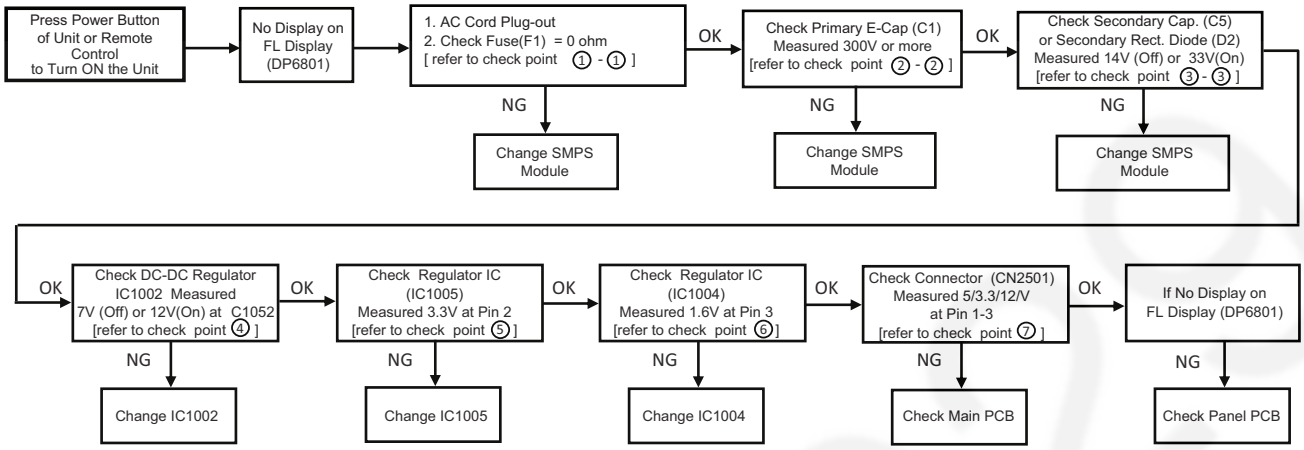


## 7.2. Bluetooth® Pairing Failure

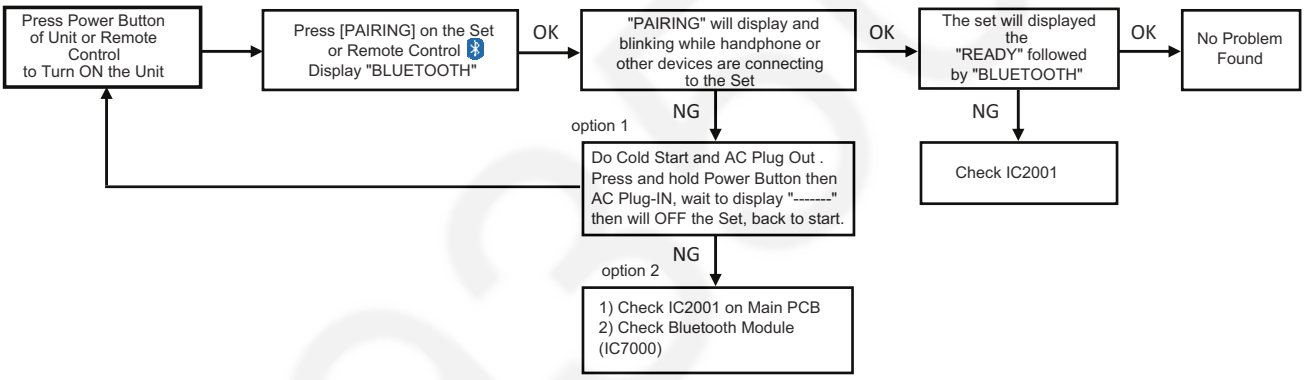


## 7.3. No Key Function

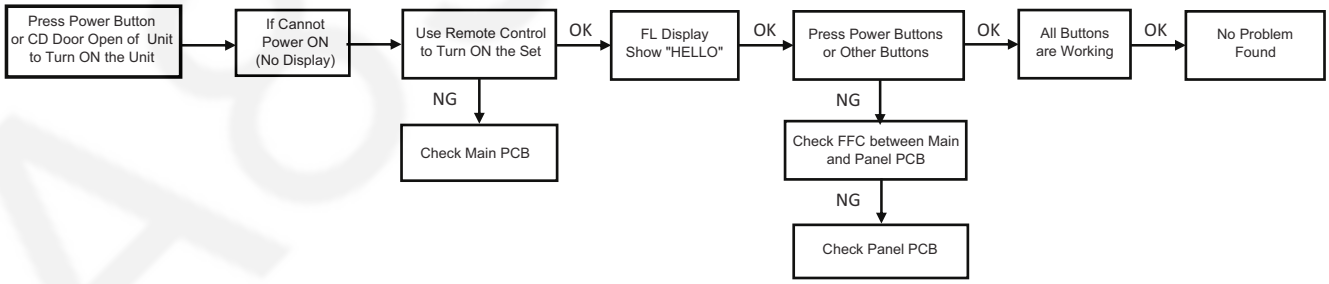

## 7.4. No Remote Control Function

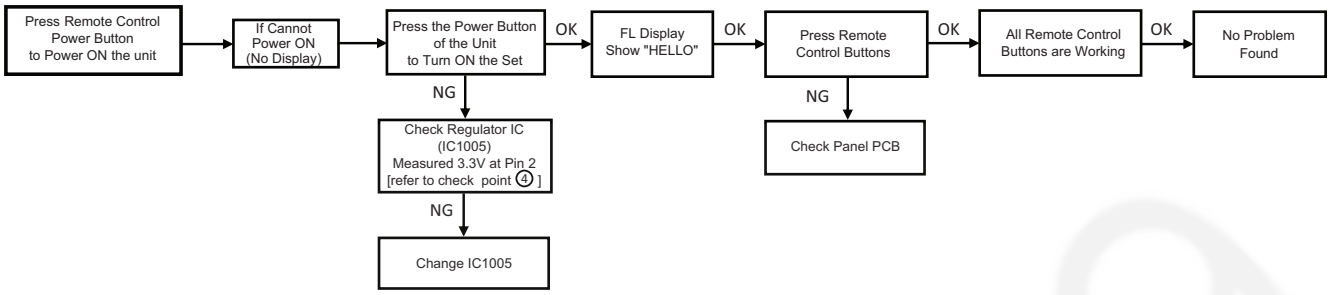


## 7.5. USB Device Cannot Detect

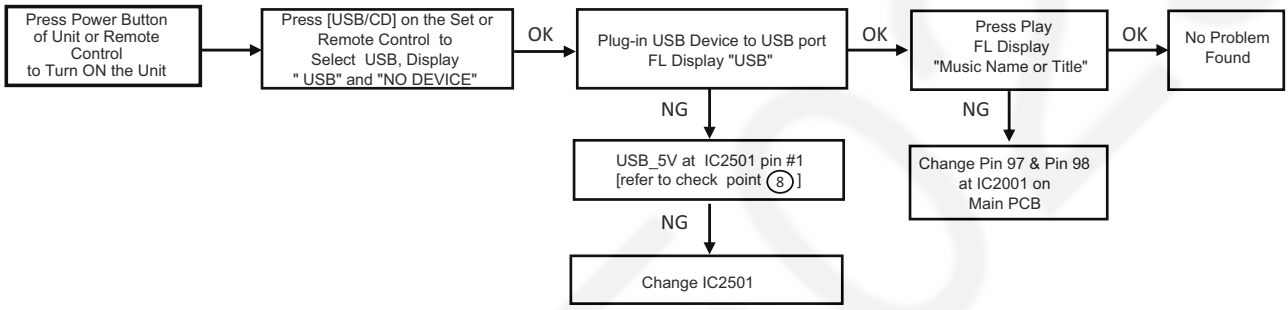


## 7.6. No Output Sound

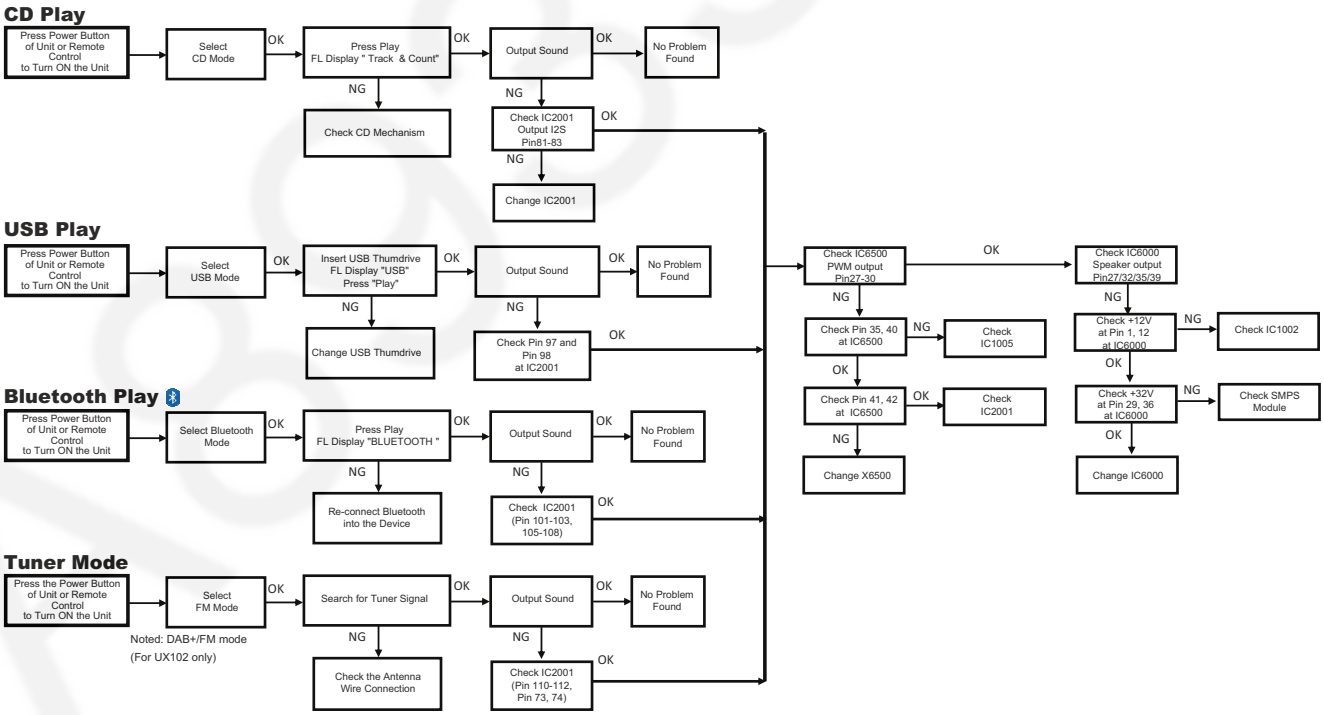

## 7.7. Check Point

**Power PCB**

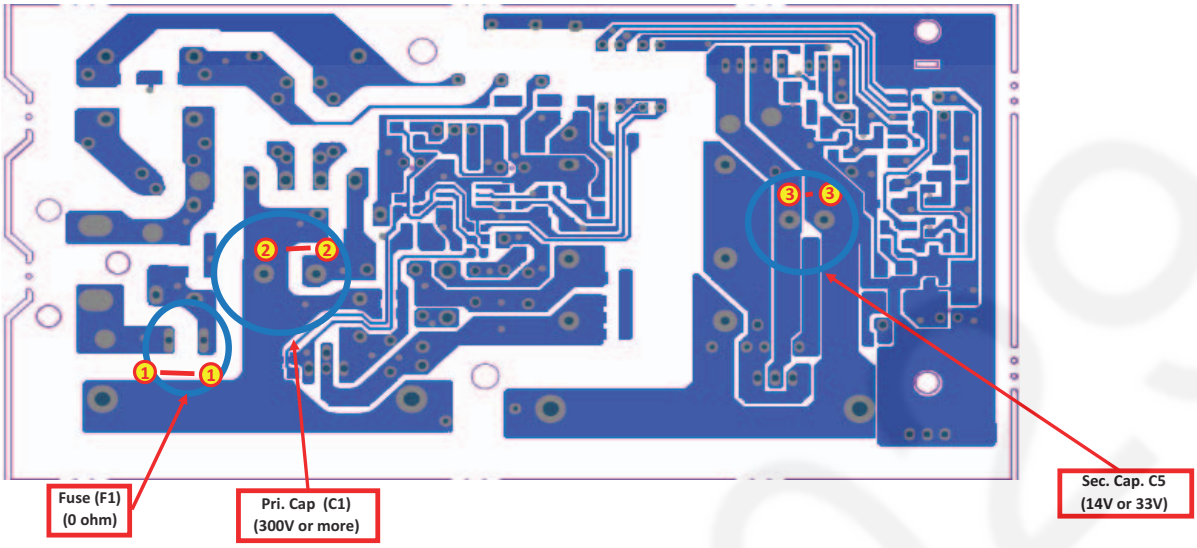


**Main PCB**

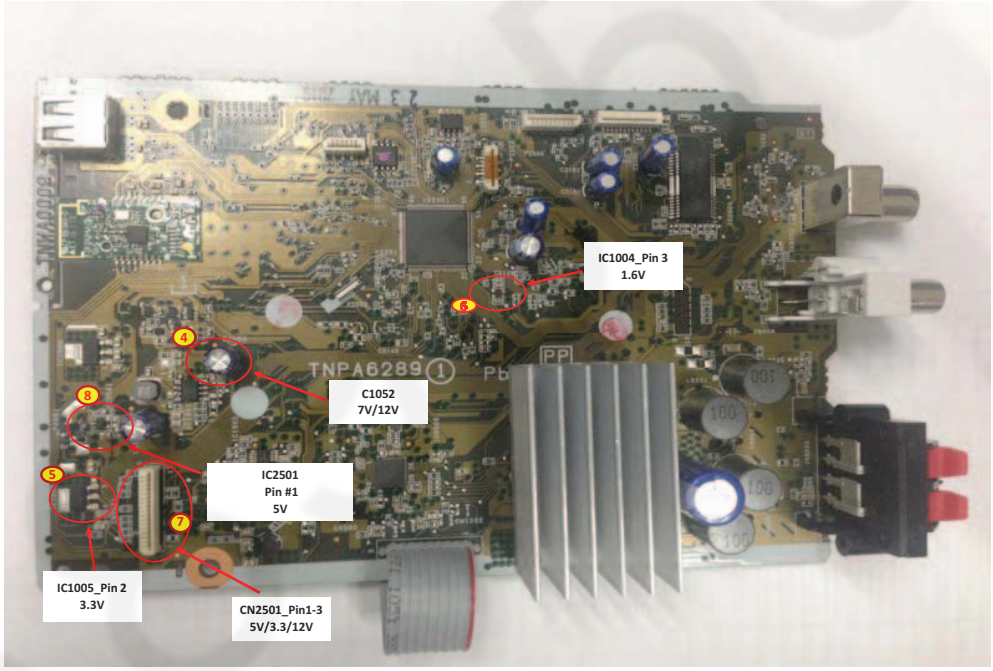

# 8 Disassembly and Assembly Instructions

**Caution Note:**

- **This section describes the disassembly and/or assembly procedures for all major printed circuit boards & main components for the unit. (You may refer to the section of "Main components and P.C.B Locations" as described in the service manual)**
- **Before carrying out the disassembly process, please ensure all the safety precautions & procedures are followed.**
- **During the disassembly and/or assembly process, please handle with care as there may be chassis components with sharp edges.**
- **Avoid touching heatsinks due to its high temperature after prolong use. (See caution as described below)**

**CAUTION: HOT!!**
**PLEASE DO NOT**
**TOUCH THE HEAT SINK**

- **During disassembly and assembly, please ensure proper service tools, equipments or jigs is being used.**
- **During replacement of component parts, please refer to the section of "Replacement Parts List" as described in the service manual.**
- **Select items from the following indexes when disassembly or replacement are required.**
- Disassembly of Top Cabinet
- Disassembly of Front Panel Unit
- Disassembly of Panel P.C.B.
- Disassembly of Main P.C.B.
- Disassembly of SMPS Module
- Disassembly of Rear Cabinet
- Disassembly of CD Mechanism Unit
- Disassembly of CD Interface P.C.B.

## 8.1. Types of Screws

**CAUTION NOTE:**
Please use original screw and at correct locations.

Below shown is part no. of different screw types used:

| | |
|---|---|
| a :RHD30007-K2J | d :RHD30111-31 |
| b :XTB3+10JFJ-J | e :RHDX031008 |
| c :RHD26046-L | f :XTN2+6GFJ |

A8935029

## 8.2. Disassembly Flow Chart

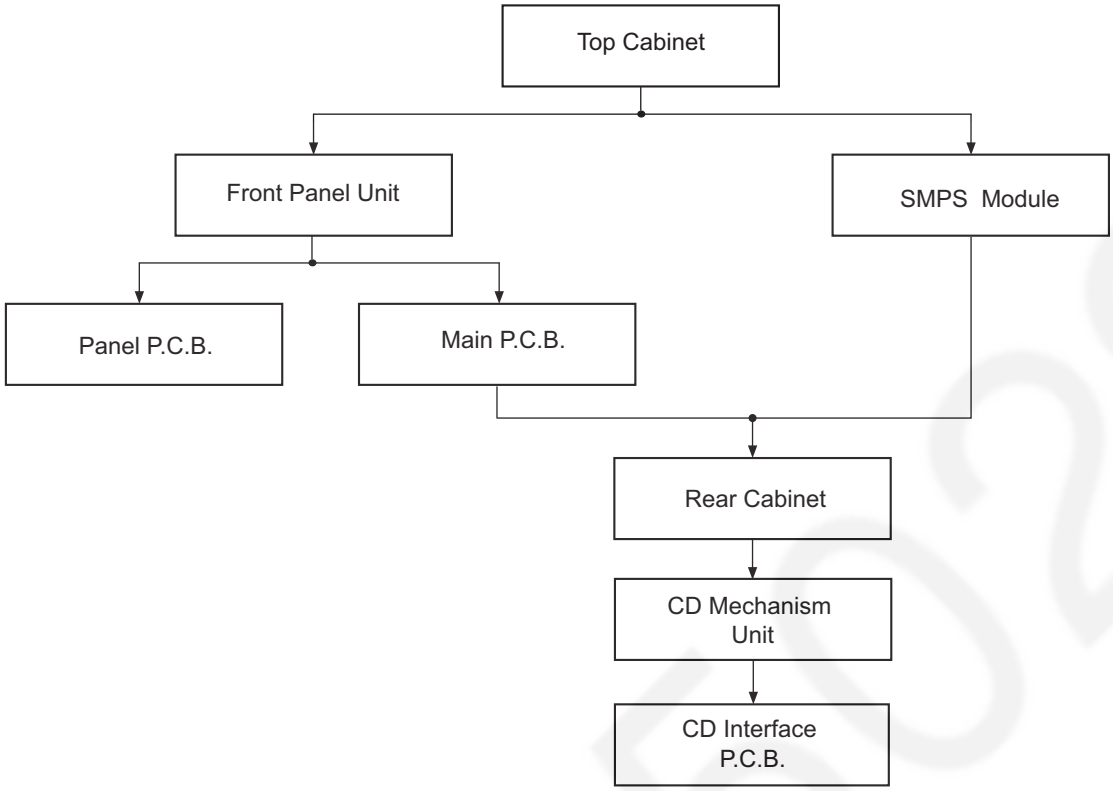


## 8.3. Main Components and P.C.B. Locations

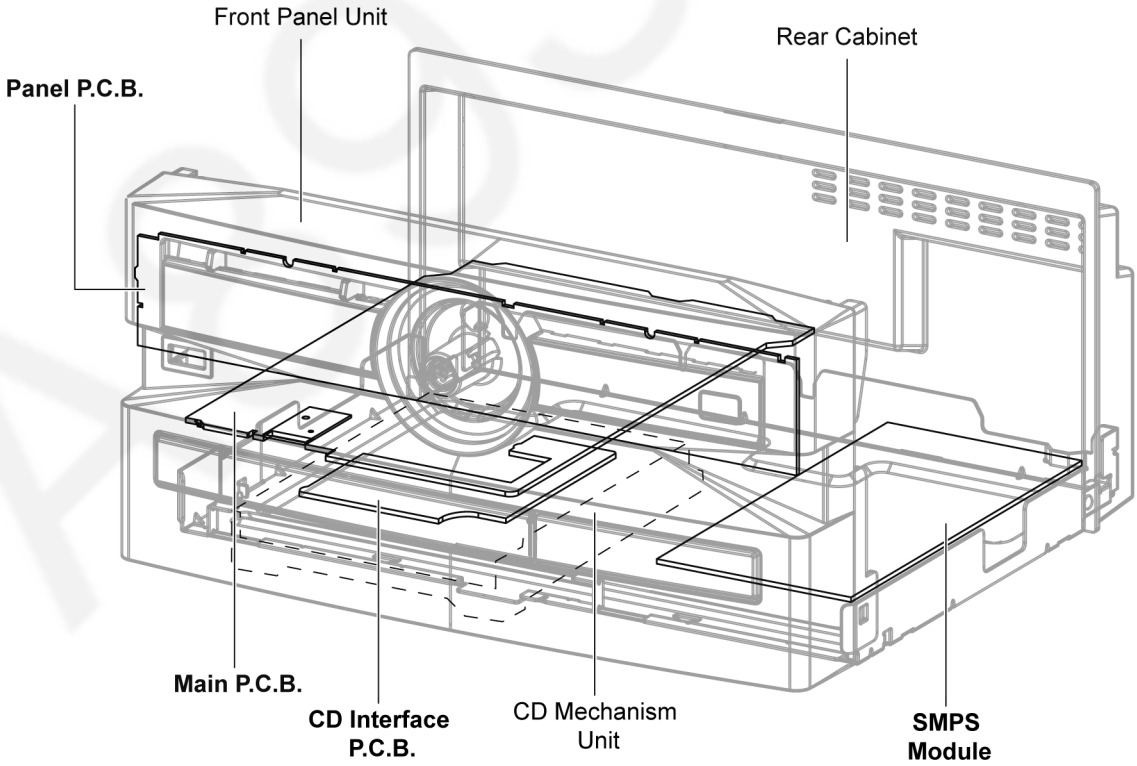

## 8.4. Disassembly of Top Cabinet

**Step 1** Remove 2 screws.

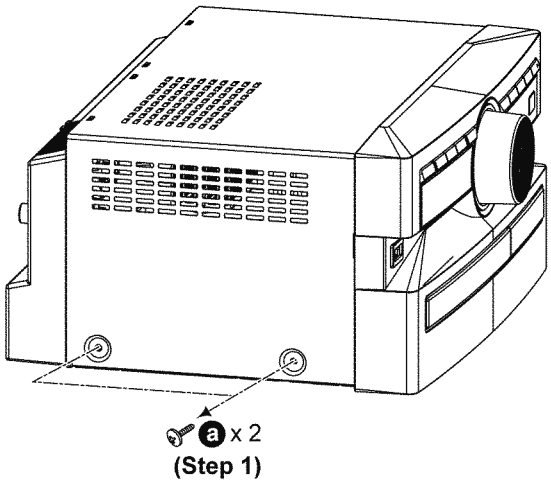


**Step 2** Remove 2 screws.

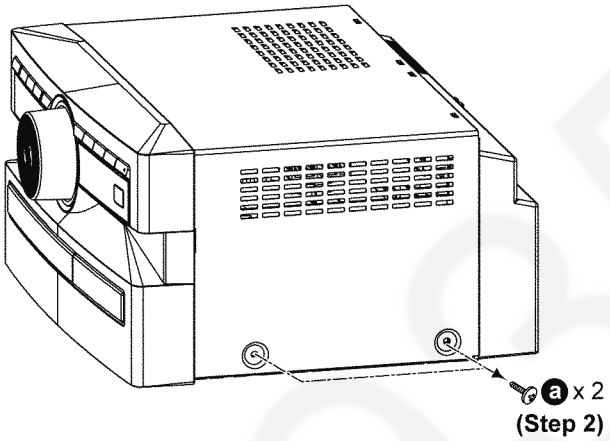


**Step 3** Remove 2 screws.

**Step 4** Slightly release both sides of Top Cabinet as arrow shown.

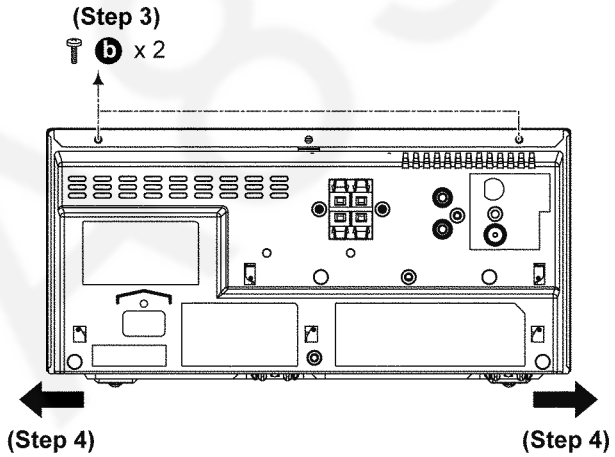


**Step 5** Lift up to remove Top Cabinet.

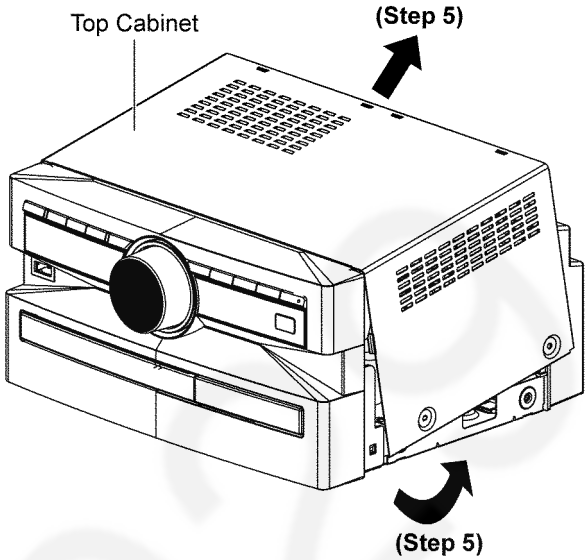


## 8.5. Disassembly of Front Panel Unit

- **Refer to "Disassembly of Top Cabinet".**

**Step 1** Detach 17P FFC at connector (CN2501) on Main P.C.B..

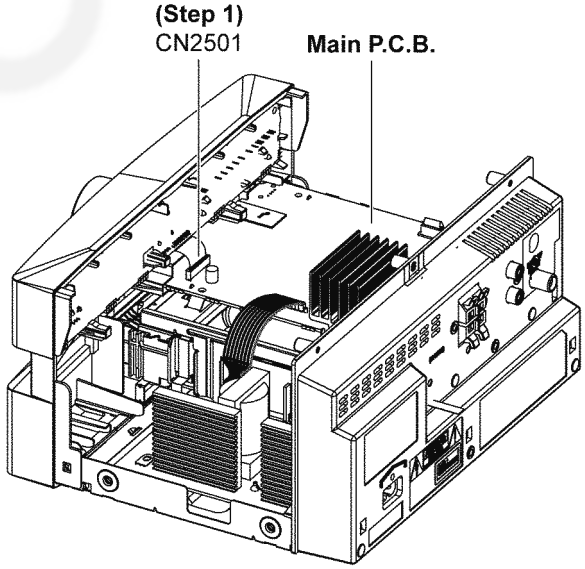

**Step 2** Release tabs at bottom of unit.

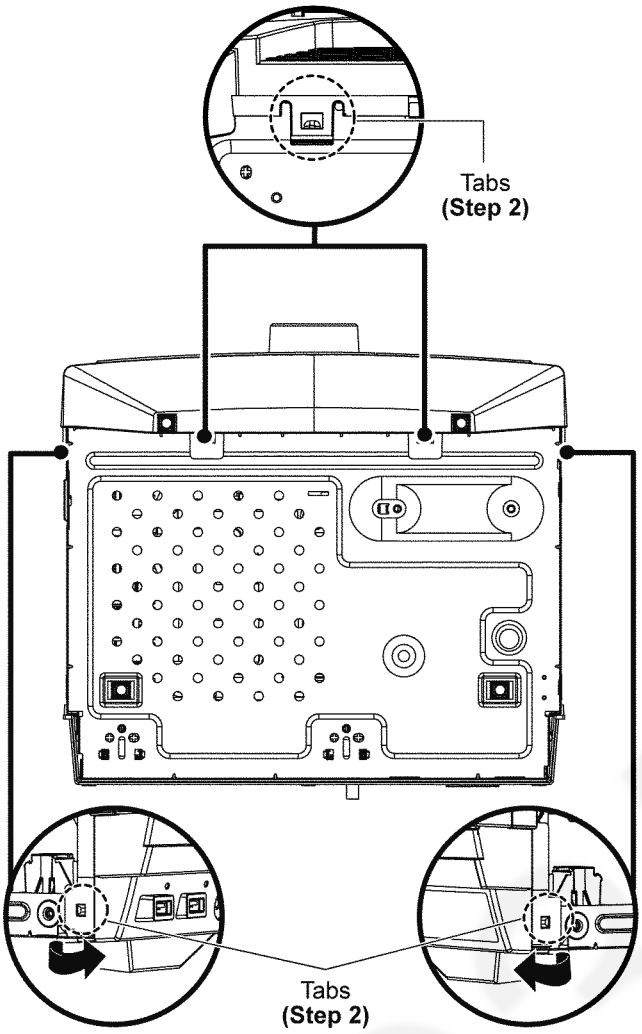


**Step 3** Remove Front Panel Unit.

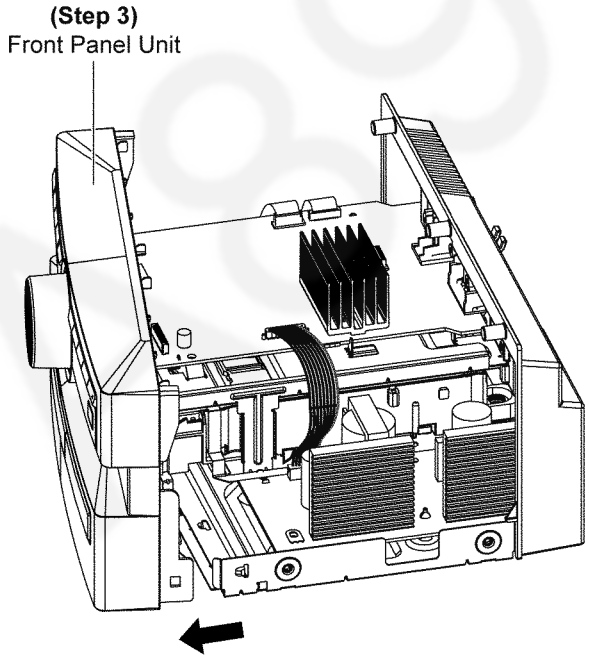


## 8.6. Disassembly of Panel P.C.B.

- **Refer to "Disassembly of Top Cabinet".**
- **Refer to "Disassembly of Front Panel Unit".**

**Step 1** Remove Volume Knob.

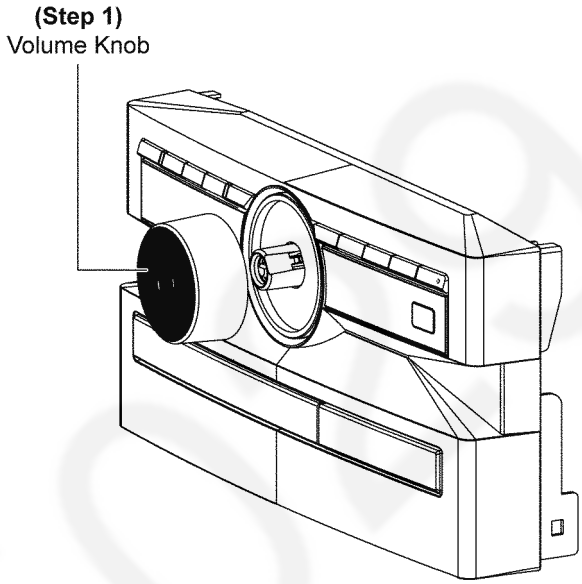


**Step 2** Remove 5 screws.
**Step 3** Release catches.
**Step 4** Lift up to remove Panel P.C.B..

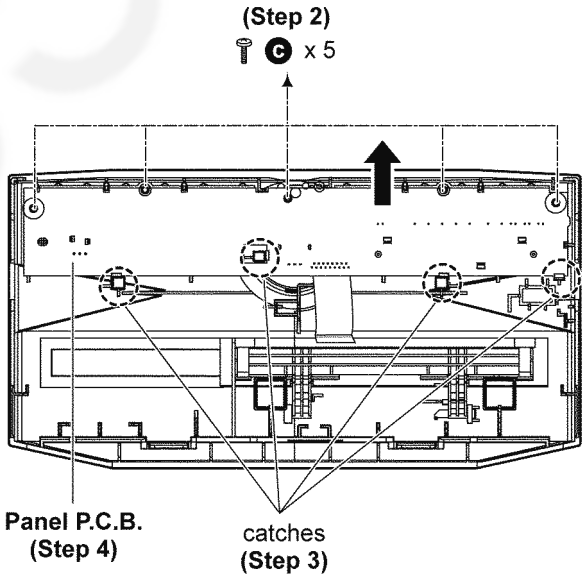

## 8.7. Disassembly of Main P.C.B.

- **Refer to “Disassembly of Top Cabinet”.**
- **Refer to “Disassembly of Front Panel Unit”.**

**Step 1** Remove 4 screws.

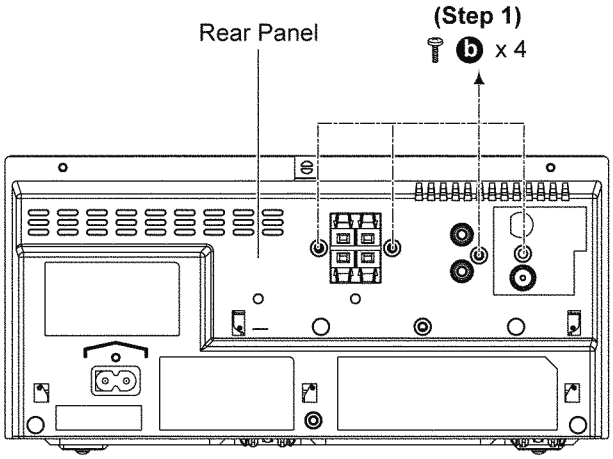


**Step 2** Detach 9P Wire at connector (CON2) on SMPS Module.
**Step 3** Detach 10P FFC at connector (P2004) on Main P.C.B..
**Step 4** Detach 24P FFC at connector (P2005) on Main P.C.B..

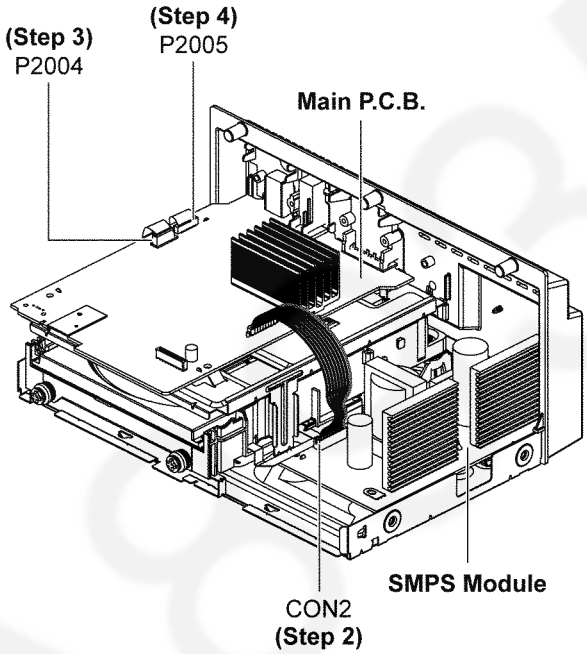


**Step 5** Remove 2 screws.
**Step 6** Remove Main P.C.B..

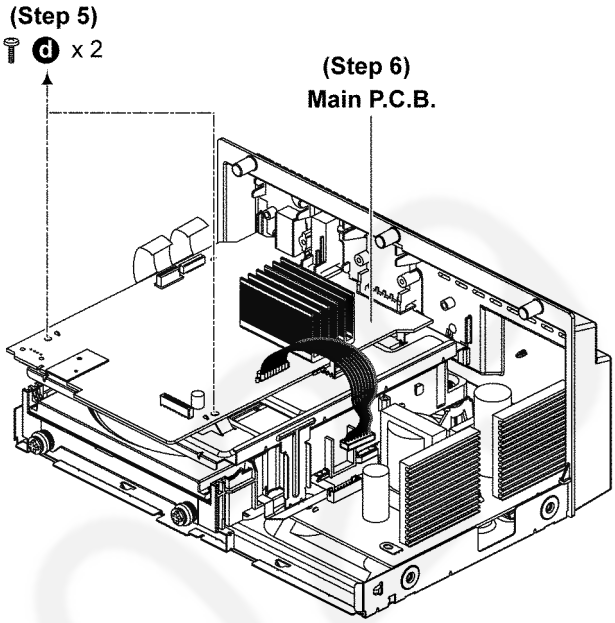


## 8.8. Disassembly of SMPS Module

- **Refer to “Disassembly of Top Cabinet”.**

**Step 1** Remove screw.

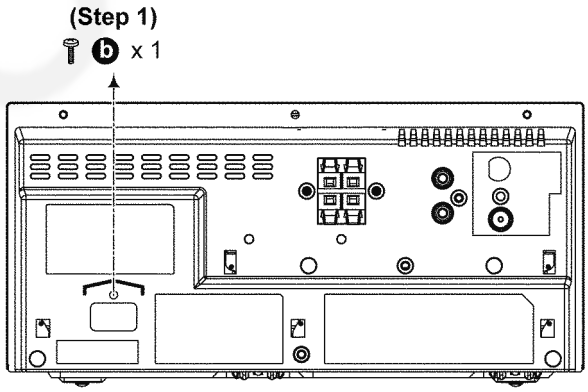

**Step 2** Detach 9P Wire at connector (CON2) on SMPS Module.
**Step 3** Remove 2 screws.
**Step 4** Remove SMPS Module.

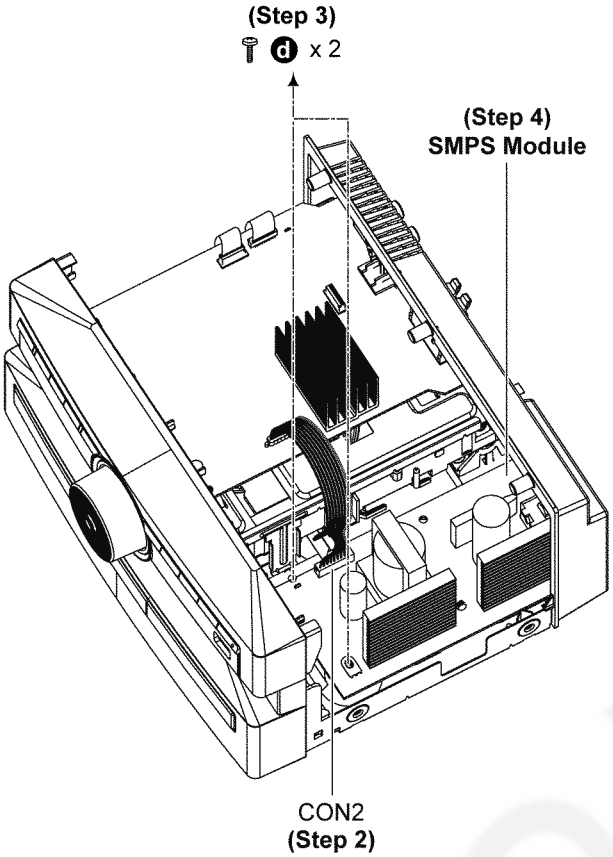


## 8.9. Disassembly of Rear Cabinet

- **Refer to "Disassembly of Top Cabinet".**
- **Refer to "Disassembly of Front Panel Unit".**
- **Refer to "Disassembly of Main P.C.B.".**
- **Refer to "Disassembly of SMPS Module".**

**Step 1** Remove screw.

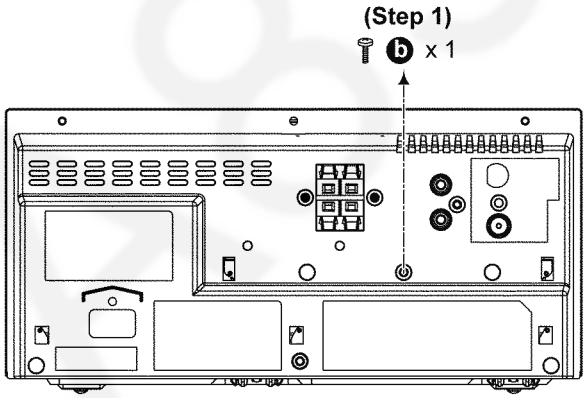


**Step 2** Remove screw.
**Step 3** Remove Inner Chassis.

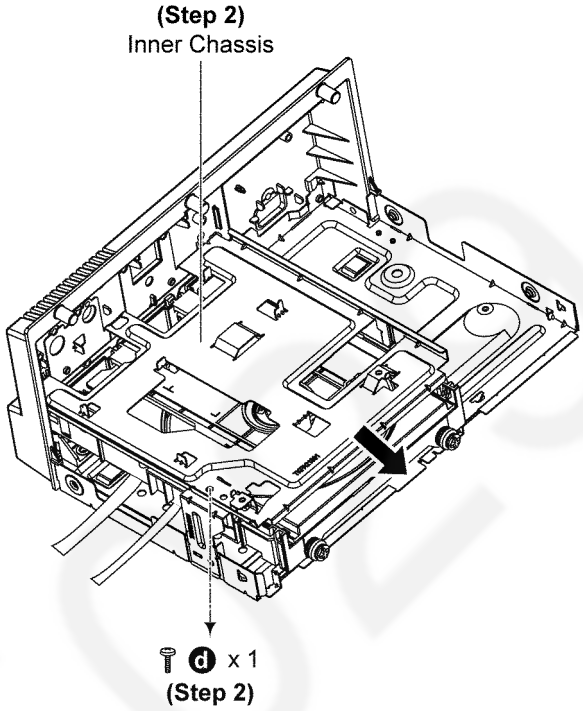


**Step 4** Release catches.
**Step 5** Remove Rear Cabinet.

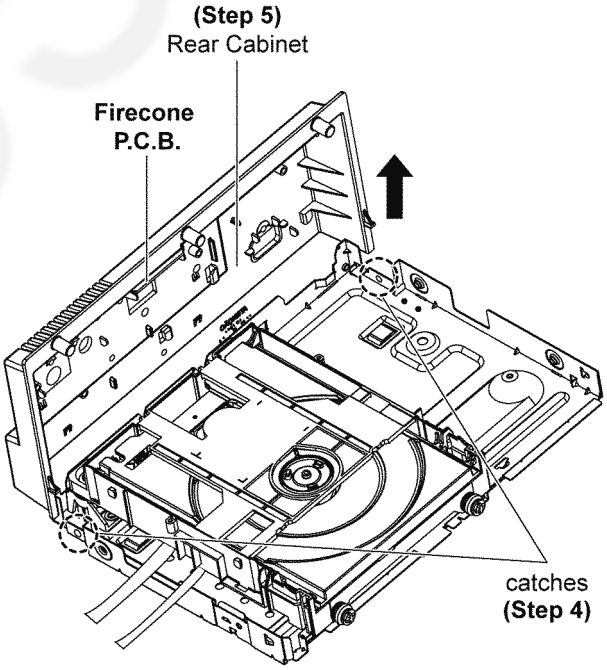


**Note: Keep Firecone P.C.B. in a safety place.**

## 8.10. Disassembly of CD Mechanism Unit

- **Refer to “Disassembly of Top Cabinet”.**
- **Refer to “Disassembly of Front Panel Unit”.**
- **Refer to “Disassembly of SMPS Module”.**

**Step 1** Detach 10P FFC at connector (P2004) on Main P.C.B..
**Step 2** Detach 24P FFC at connector (P2005) on Main P.C.B..

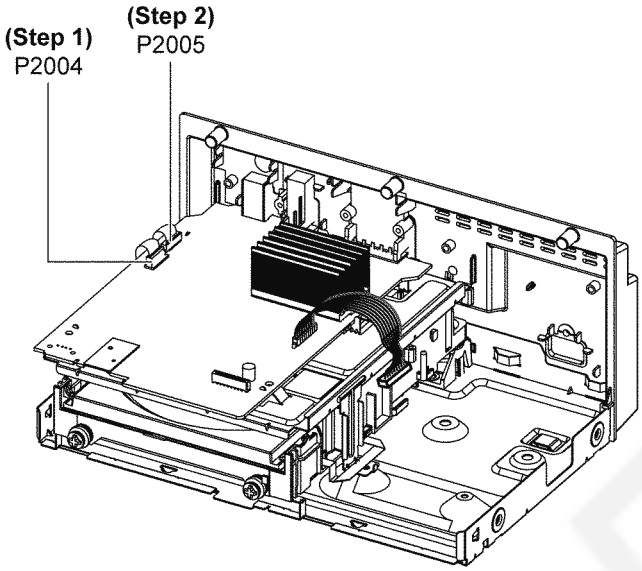


**Step 3** Release tabs.

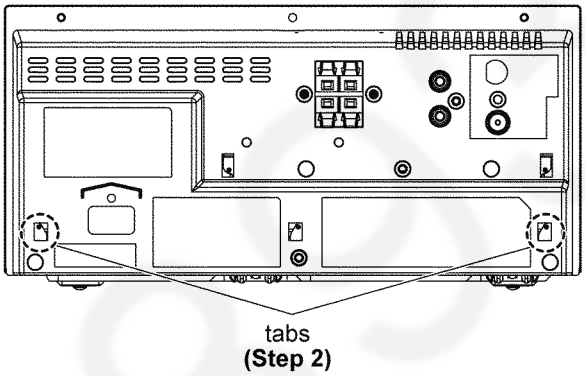


**Step 4** Lift up Rear Cabinet, Main P.C.B. and Inner Chassis as diagram shown.

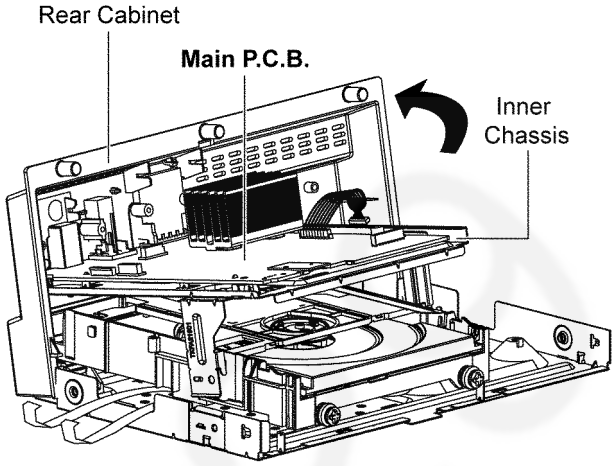


**Step 5** Remove 2 screws.
**Step 6** Remove CD Mechanism Unit.

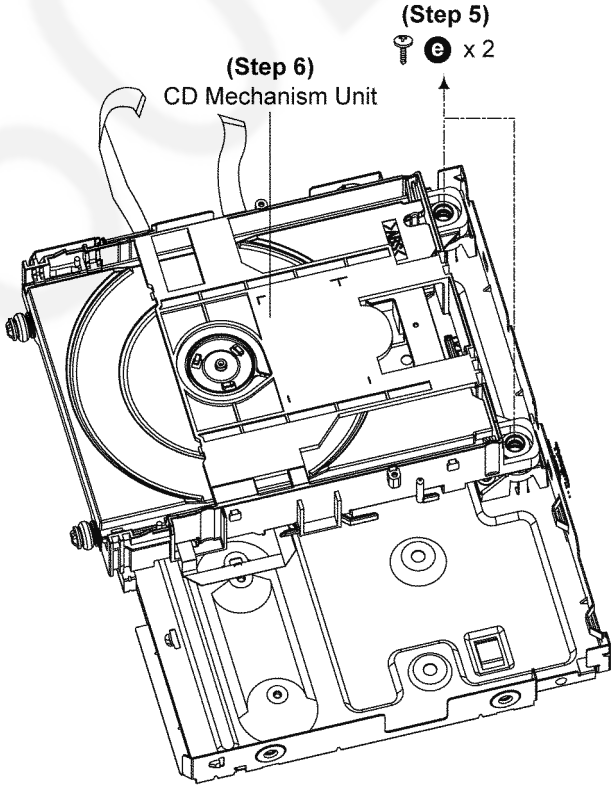

## 8.11. Disassembly of CD Interface P.C.B.

- **Refer to “Disassembly of Top Cabinet”.**
- **Refer to “Disassembly of Front Panel Unit”.**
- **Refer to “Disassembly of SMPS Module”.**
- **Refer to “Disassembly of CD Mechanism Unit”.**

**Step 1** Remove 2 screws.
**Step 2** Desolder pins of the motor (M7301).
**Step 3** Desolder pins of the motor (M7302).
**Step 4** Remove CD Interface P.C.B..

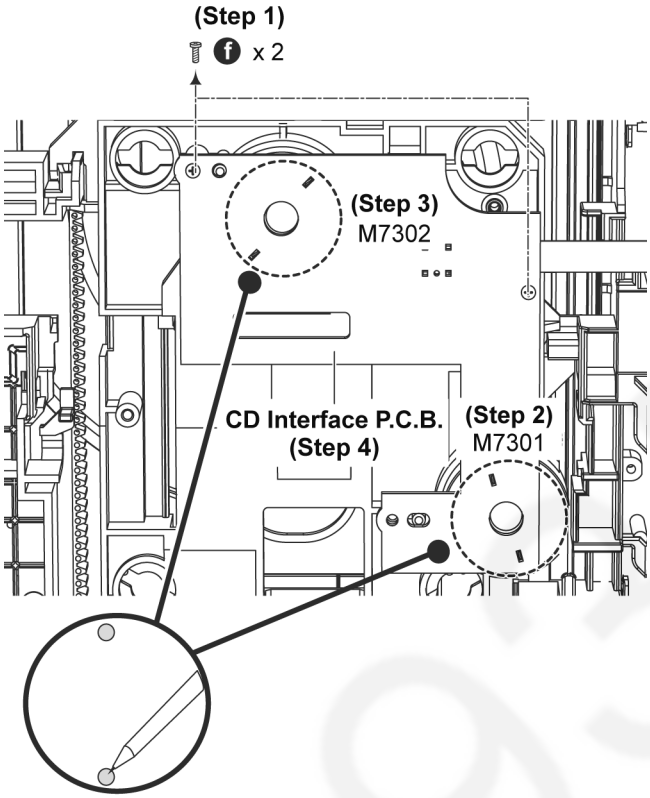


A8935029

# 9 Service Position

**Note: Refer to Section 8 for disassembly instruction for the related parts.**

## 9.1. Checking of Panel P.C.B. and Main P.C.B.

**Step 1** Remove Top Cabinet.
**Step 2** Remove Front Panel Unit.
**Step 3** Remove Panel P.C.B..
**Step 4** Place Panel P.C.B. on the insulated material as shown.
**Step 5** Attach 17P FFC at connector (CN2501) on Main P.C.B..
**Step 6** Panel P.C.B. and Main P.C.B. can be checked as diagram shown.

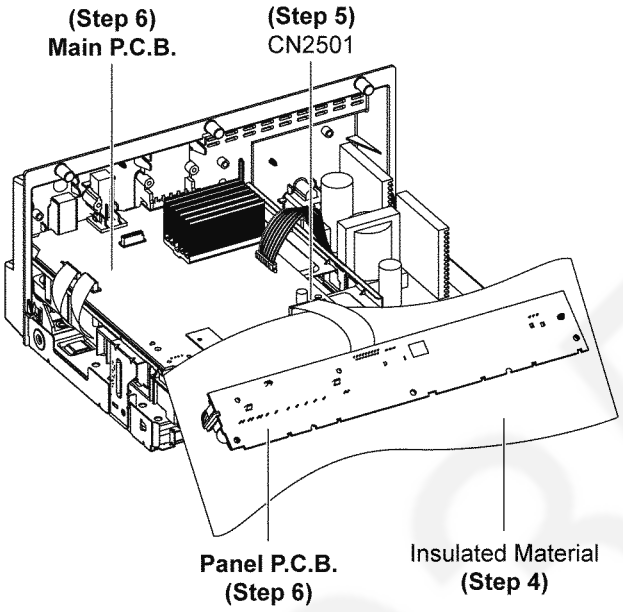


A8935029

A89350229

# 10 Block Diagram

## 10.1. System Control

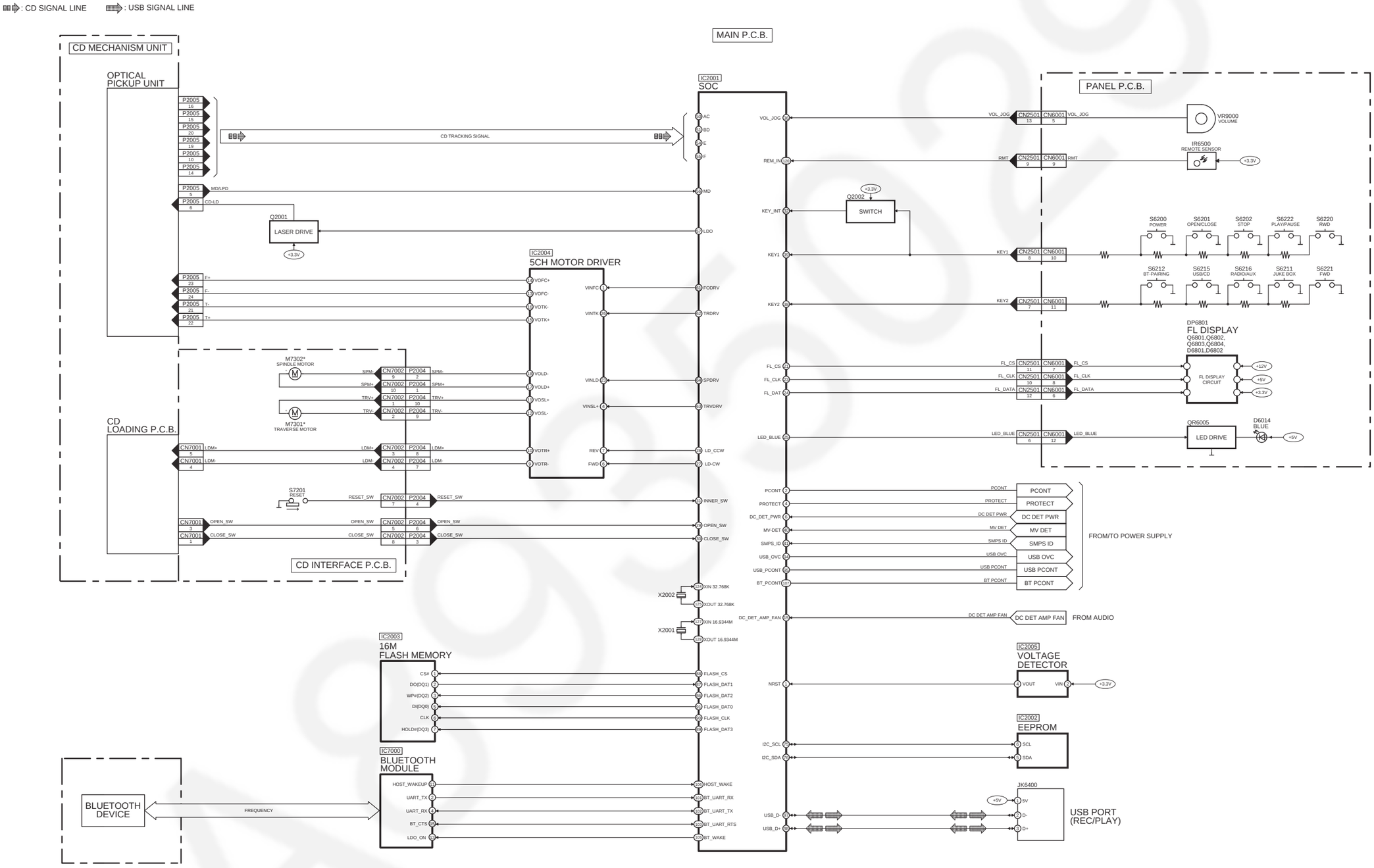


NOTE: " * " REF IS FOR INDICATION ONLY

SA-AKX100PN/PR/PS SYSTEM CONTROL BLOCK DIAGRAM

## 10.2. Audio

: CD SIGNAL LINE  : TUNER/AUX SIGNAL LINE  : AUDIO SIGNAL LINE  : FM SIGNAL LINE

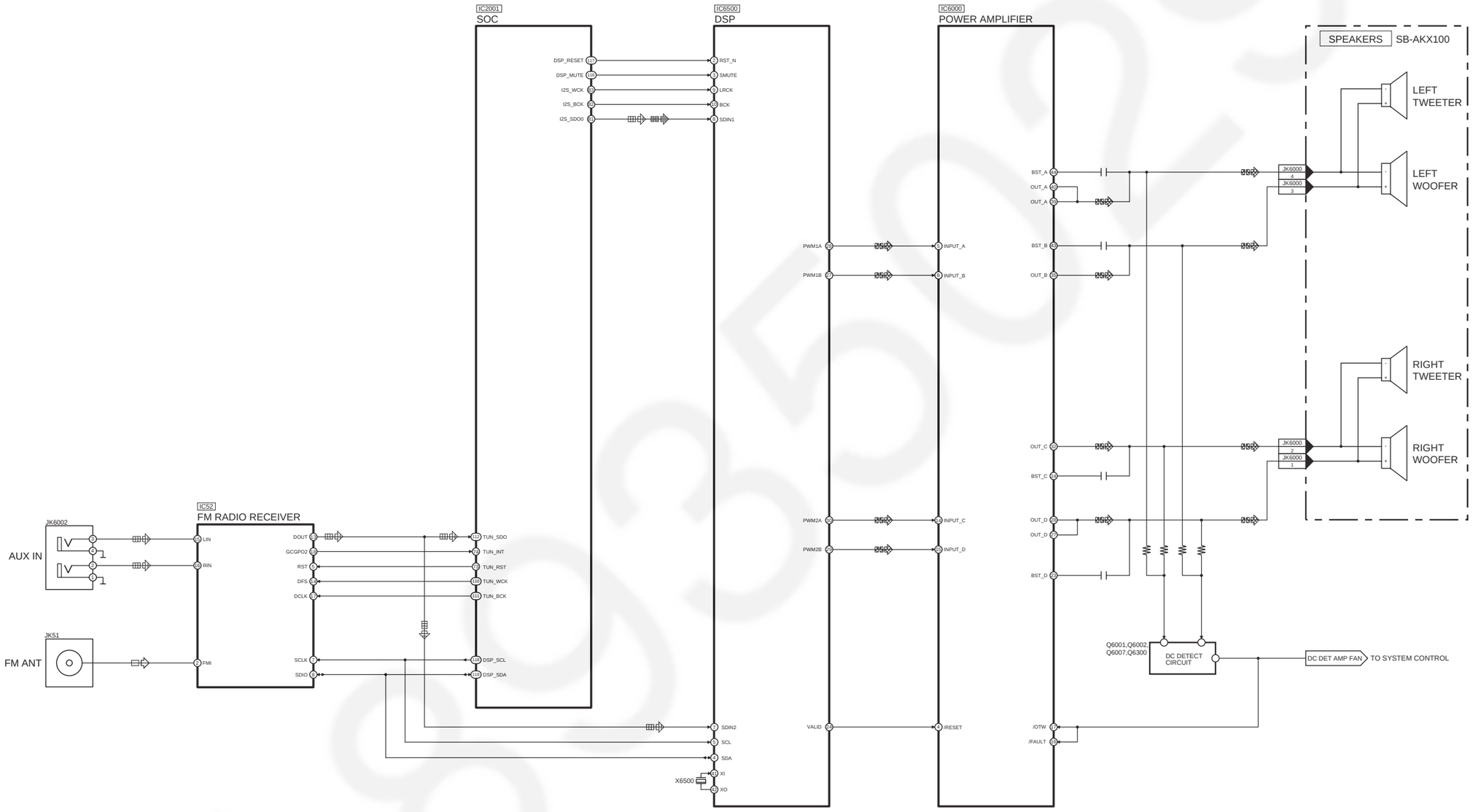


SA-AKX100PN/PR/PS AUDIO BLOCK DIAGRAM

## 10.3. Power Supply

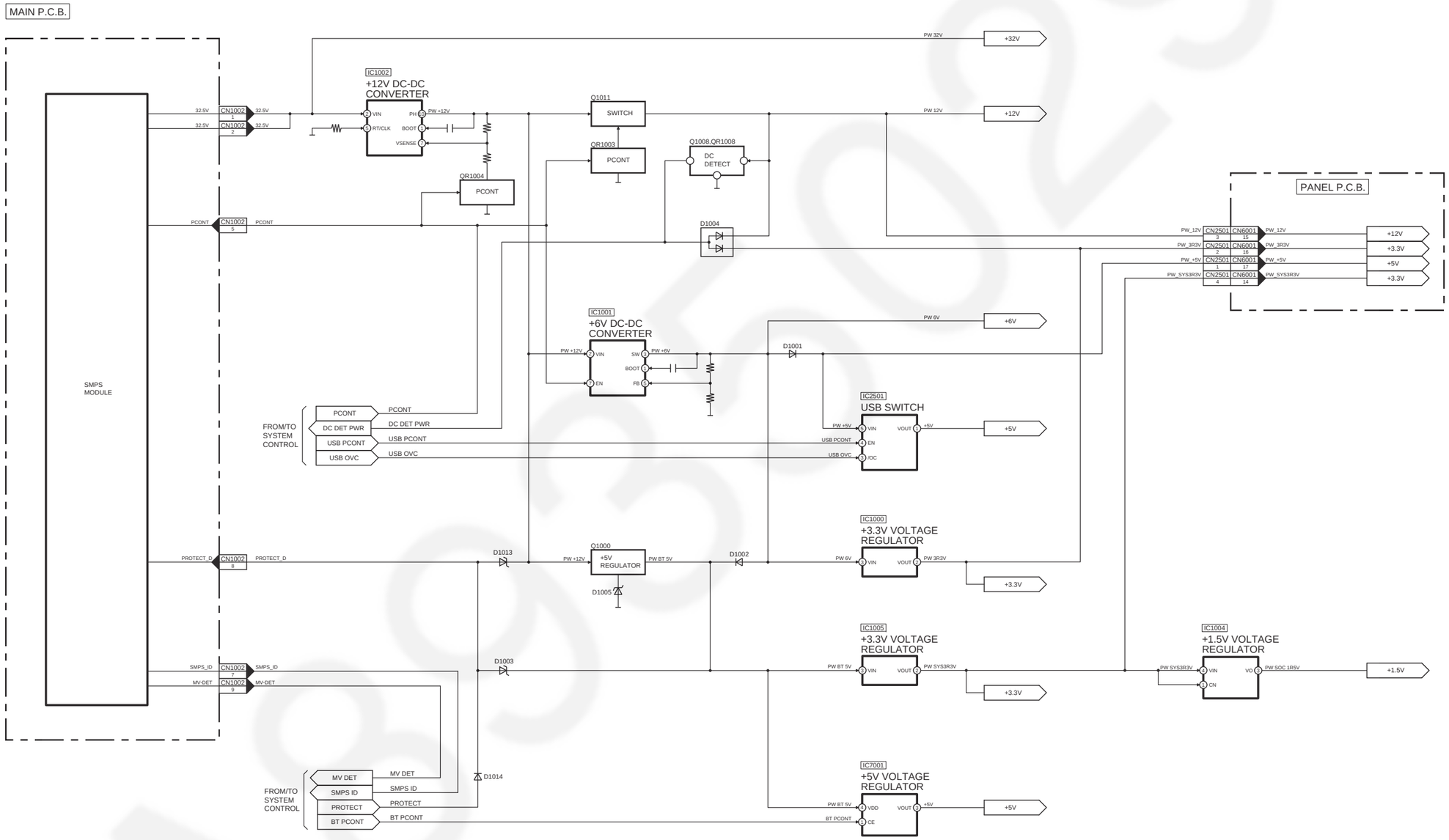


SA-AKX100PN/PR/PS POWER SUPPLY BLOCK DIAGRAM

# 11 Wiring Connection Diagram

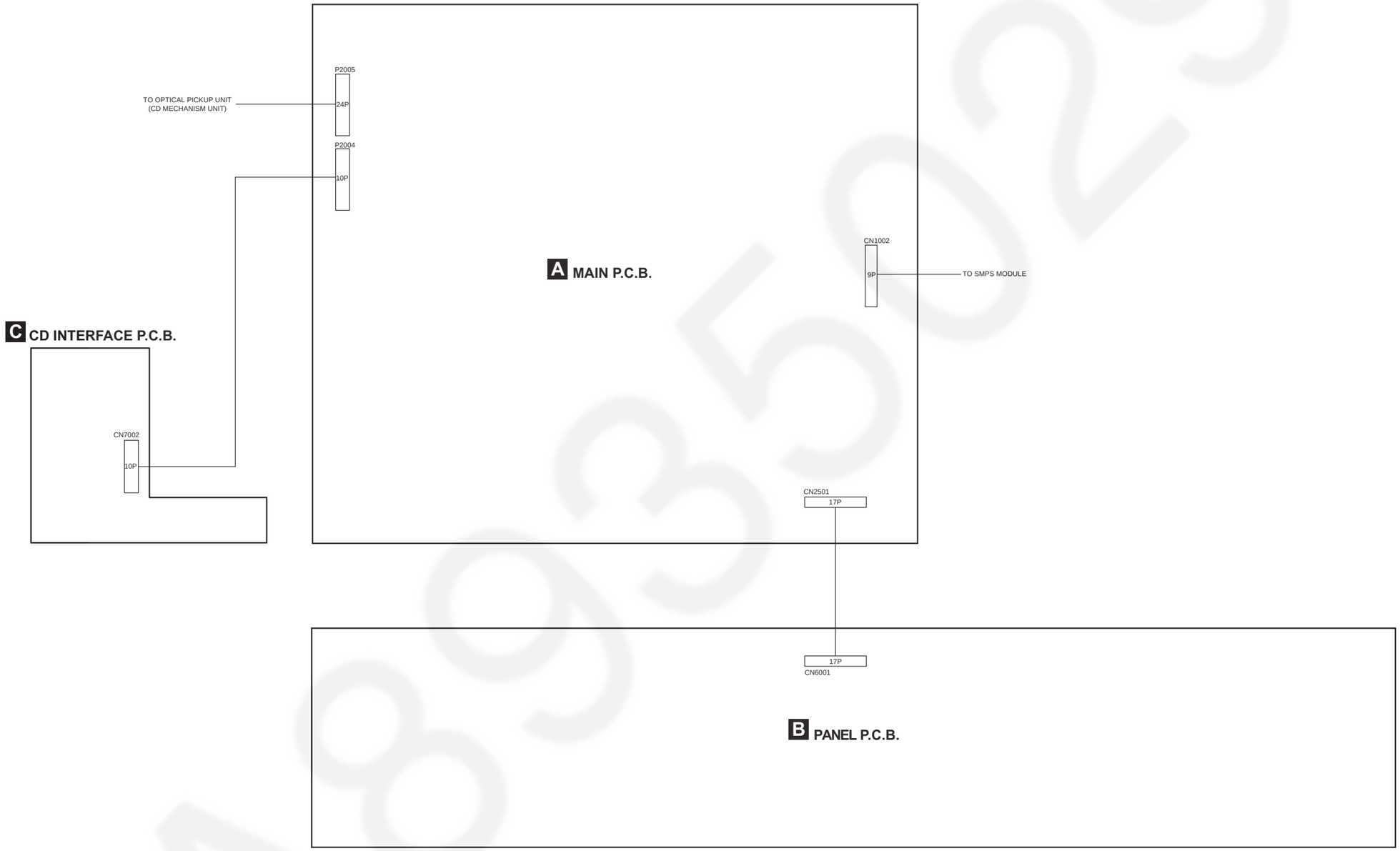


SA-AKX100PN/PR/PS WIRING CONNECTION DIAGRAM

A8G5029

# 12 Schematic Diagram

## 12.1. Schematic Diagram Notes

- **This schematic diagram may be modified at any time with the development of new technology.**

**Notes:**

| | |
|---|---|
| **S6200:** | Power switch (⏻/I). |
| **S6201:** | Open/Close switch (⏏). |
| **S6202:** | Stop (■) switch. |
| **S6211:** | Jukebox switch. |
| **S6212:** | Bluetooth/-Pairing switch. |
| **S6215:** | USB/CD switch. |
| **S6216:** | Radio/Aux switch. |
| **S6220:** | Rewind (I◀◀/◀◀) switch. |
| **S6221:** | Forward (▶▶/▶▶I) switch. |
| **S6222:** | Play/Pause (▶/❚❚) switch. |
| **S7201:** | Reset switch. |
| **VR9000:** | Volume Jog. |

- Important safety notice:

  Components identified by ⚠ mark have special characteristics important for safety.
  Furthermore, special parts which have purposes of fire-retardant (resistors), high quality sound (capacitors), low-noise (resistors), etc are used.
  When replacing any of components, be sure to use only manufacturer's specified parts shown in the parts list.

- **Resistor**
  Unit of resistance is OHM [Ω] (K=1,000, M=1,000,000).

- **Capacitor**
  Unit of capacitance is μF, unless otherwise noted. F=Farads, pF=pico-Farad.

- **Coil**
  Unit of inductance is H, unless otherwise noted.

- *****
  REF IS FOR INDICATION ONLY.

- Voltage and signal line

| | |
|---|---|
| —— | : +B signal line |
| - - - - | : -B signal line |
| | : CD signal line |
| | : Tuner/AUX signal line |
| | : Audio signal line |
| | : USB signal line |
| | : FM signal line |

AS935029

A89350229

## 12.2. Main (Micon) Circuit (1/2)

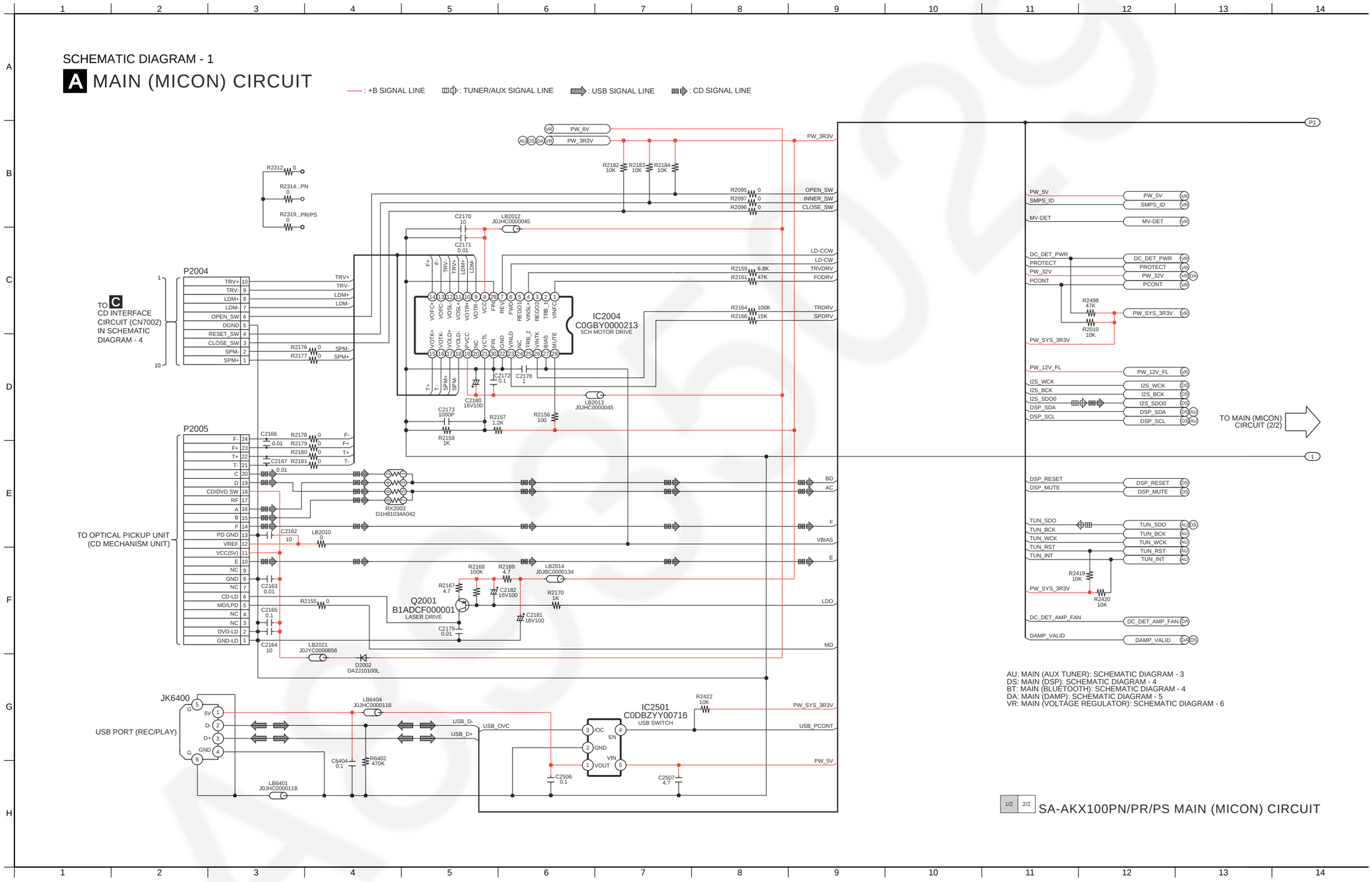

## 12.3. Main (Micon) Circuit (2/2)

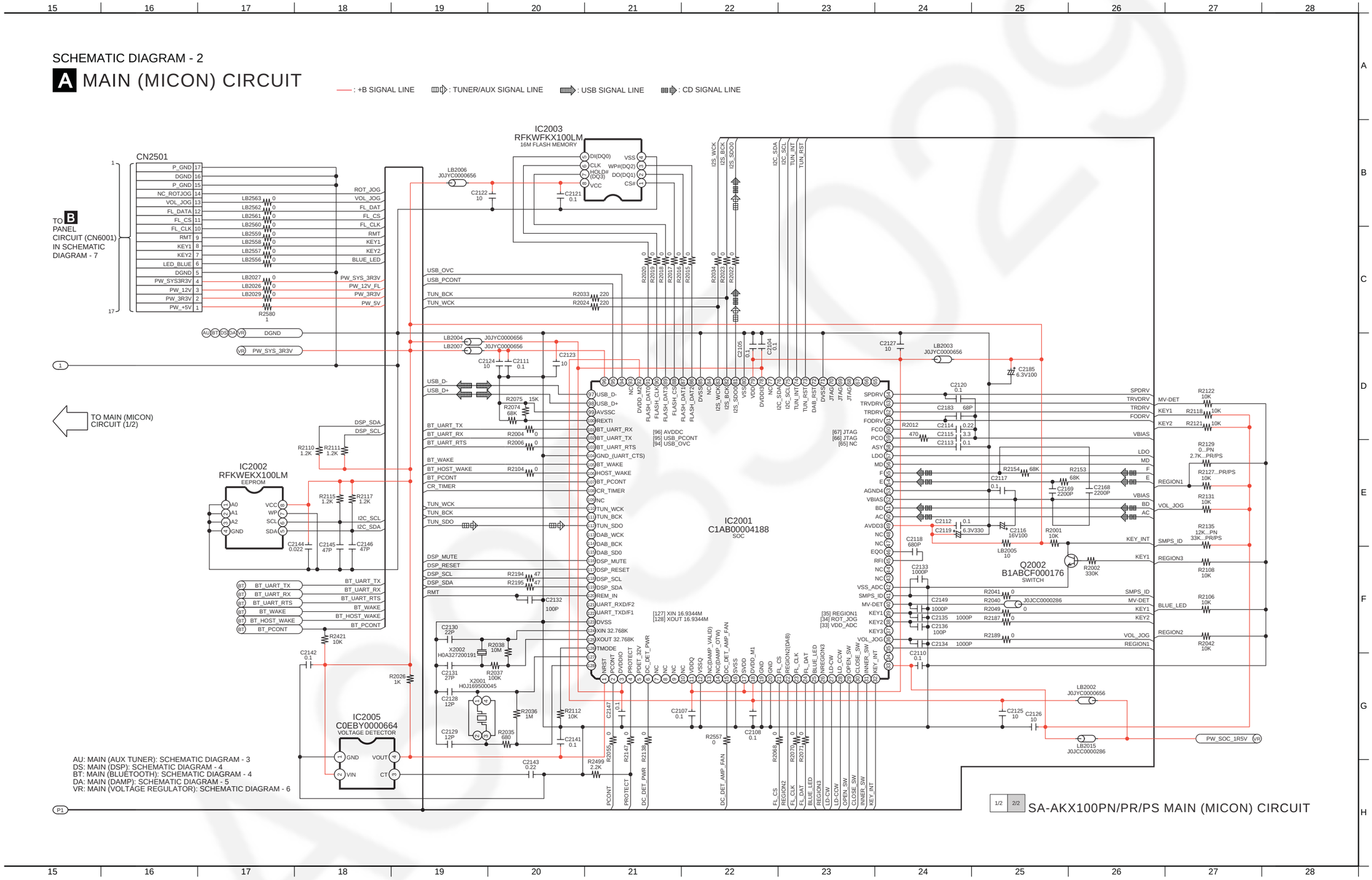

## 12.4. Main (AUX Tuner) Circuit

SCHEMATIC DIAGRAM - 3

**A** MAIN (AUX TUNER) CIRCUIT

: +B SIGNAL LINE  : TUNER/AUX SIGNAL LINE  : FM SIGNAL LINE

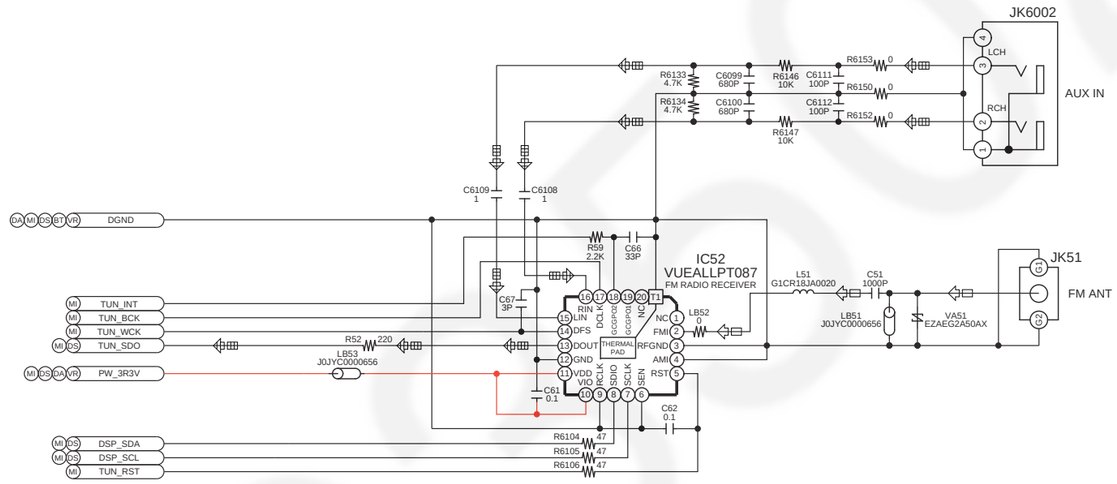


MI: MAIN (MICON): SCHEMATIC DIAGRAM - 1 ~ 2
DS: MAIN (DSP): SCHEMATIC DIAGRAM - 4
BT: MAIN (BLUETOOTH): SCHEMATIC DIAGRAM - 4
DA: MAIN (DAMP): SCHEMATIC DIAGRAM - 5
VR: MAIN (VOLTAGE REGULATOR): SCHEMATIC DIAGRAM - 6

SA-AKX100PN/PR/PS MAIN (AUX TUNER) CIRCUIT

## 12.5. Main (DSP), Main (Bluetooth) and CD Interface Circuit

SCHEMATIC DIAGRAM - 4

### A MAIN (DSP) CIRCUIT

—— : +B SIGNAL LINE  : TUNER/AUX SIGNAL LINE  : AUDIO SIGNAL LINE

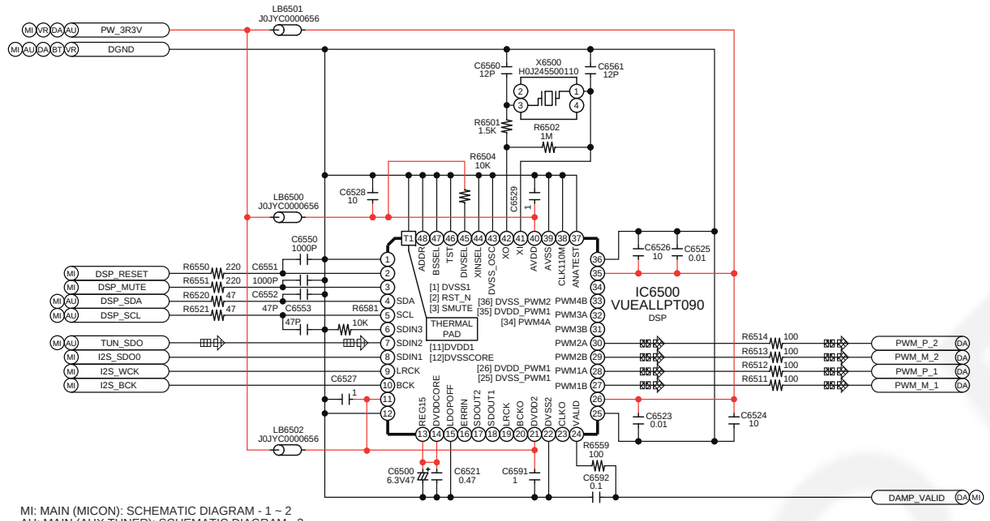


MI: MAIN (MICON): SCHEMATIC DIAGRAM - 1 ~ 2
AU: MAIN (AUX TUNER): SCHEMATIC DIAGRAM - 3
BT: MAIN (BLUETOOTH): SCHEMATIC DIAGRAM - 4
DA: MAIN (DAMP): SCHEMATIC DIAGRAM - 5
VR: MAIN (VOLTAGE REGULATOR): SCHEMATIC DIAGRAM - 6

### A MAIN (BLUETOOTH) CIRCUIT

—— : +B SIGNAL LINE

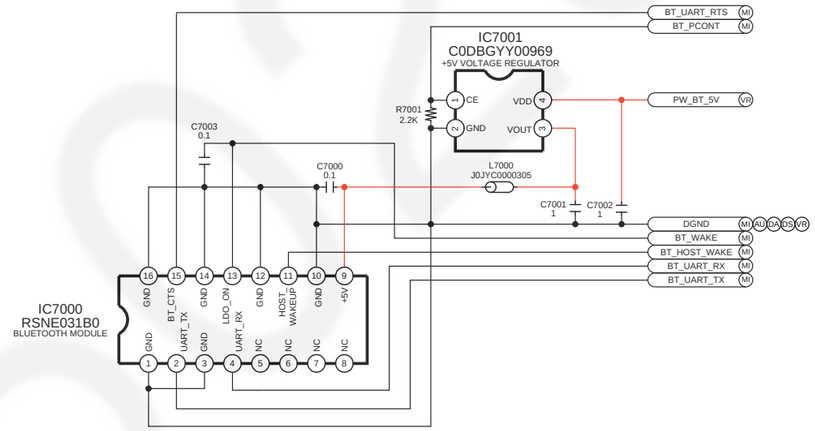


MI: MAIN (MICON): SCHEMATIC DIAGRAM - 1 ~ 2
AU: MAIN (AUX TUNER): SCHEMATIC DIAGRAM - 3
DS: MAIN (DSP): SCHEMATIC DIAGRAM - 4
DA: MAIN (DAMP): SCHEMATIC DIAGRAM - 5
VR: MAIN (VOLTAGE REGULATOR): SCHEMATIC DIAGRAM - 6

### C CD INTERFACE CIRCUIT

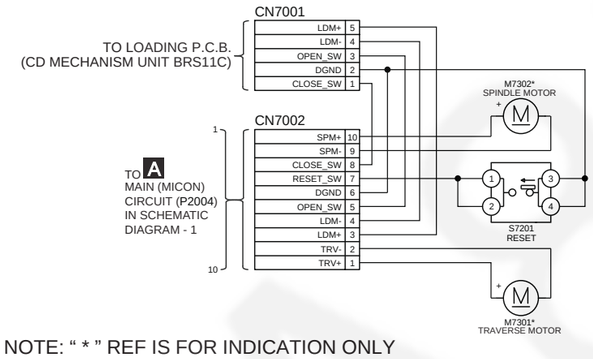


NOTE: " * " REF IS FOR INDICATION ONLY

SA-AKX100PN/PR/PS MAIN (DSP) / MAIN (BLUETOOTH) / CD INTERFACE CIRCUIT

## 12.6. Main (DAMP) Circuit

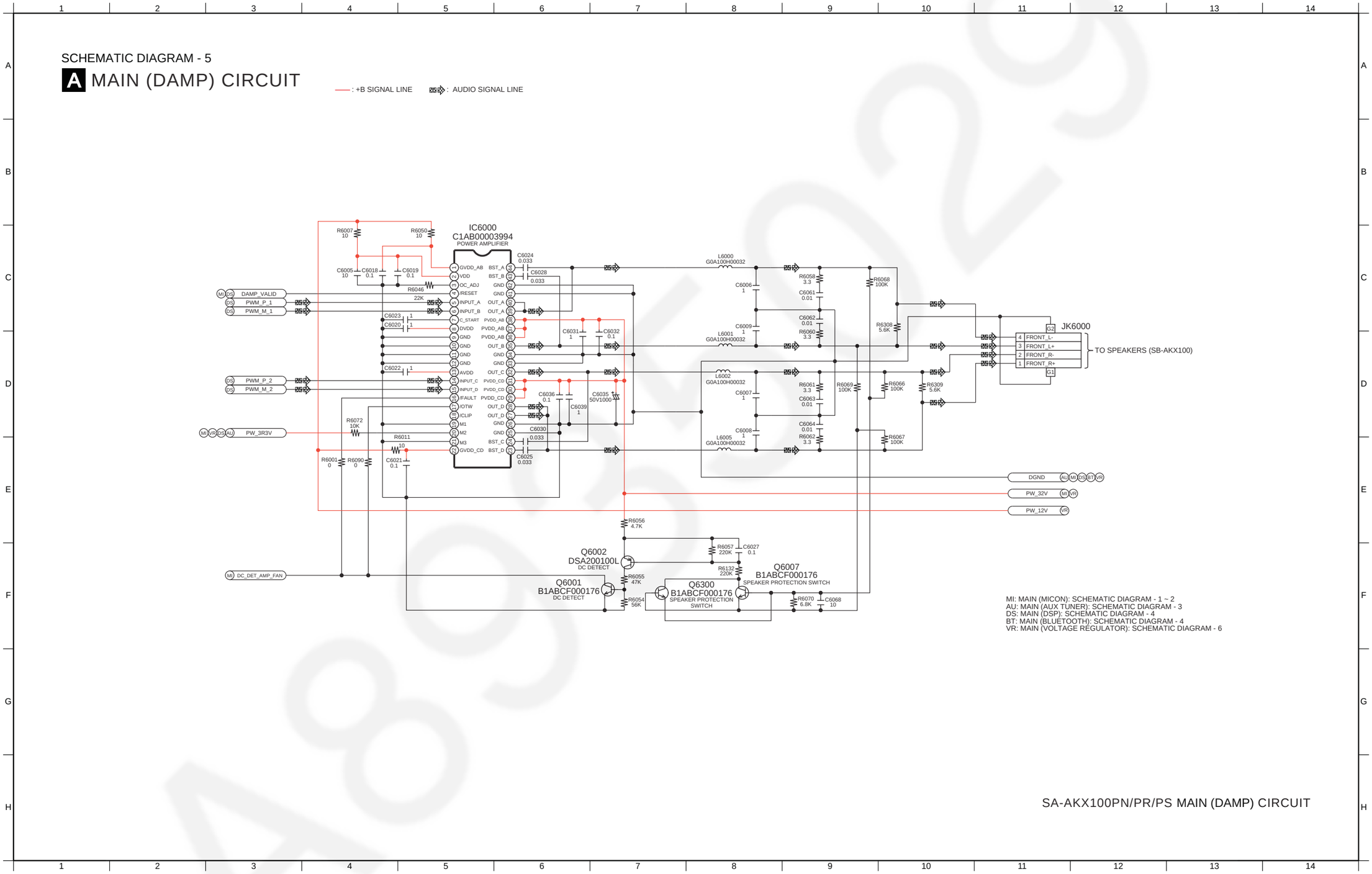

## 12.7. Main (Voltage Regulator) Circuit

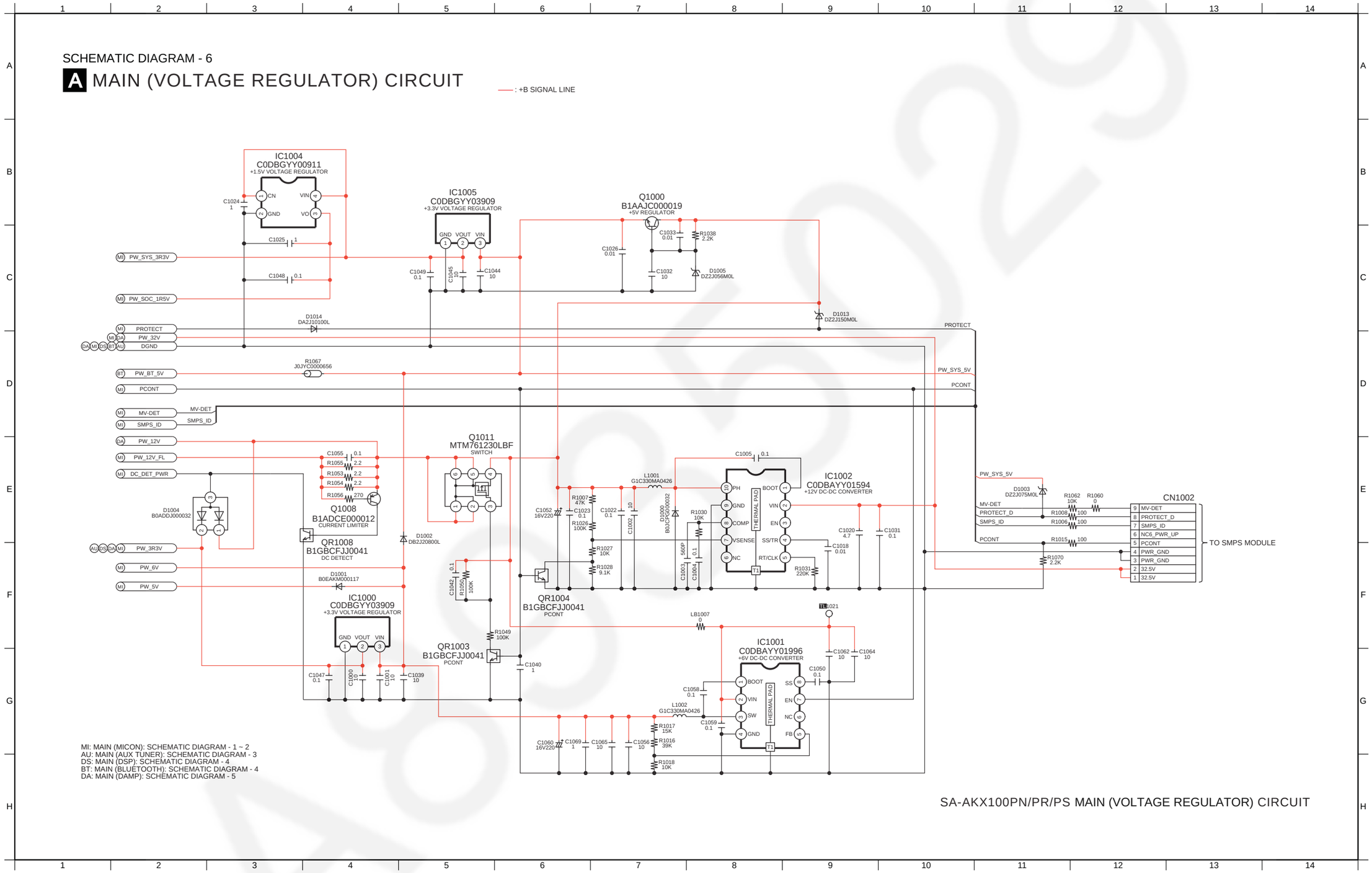

## 12.8. Panel Circuit

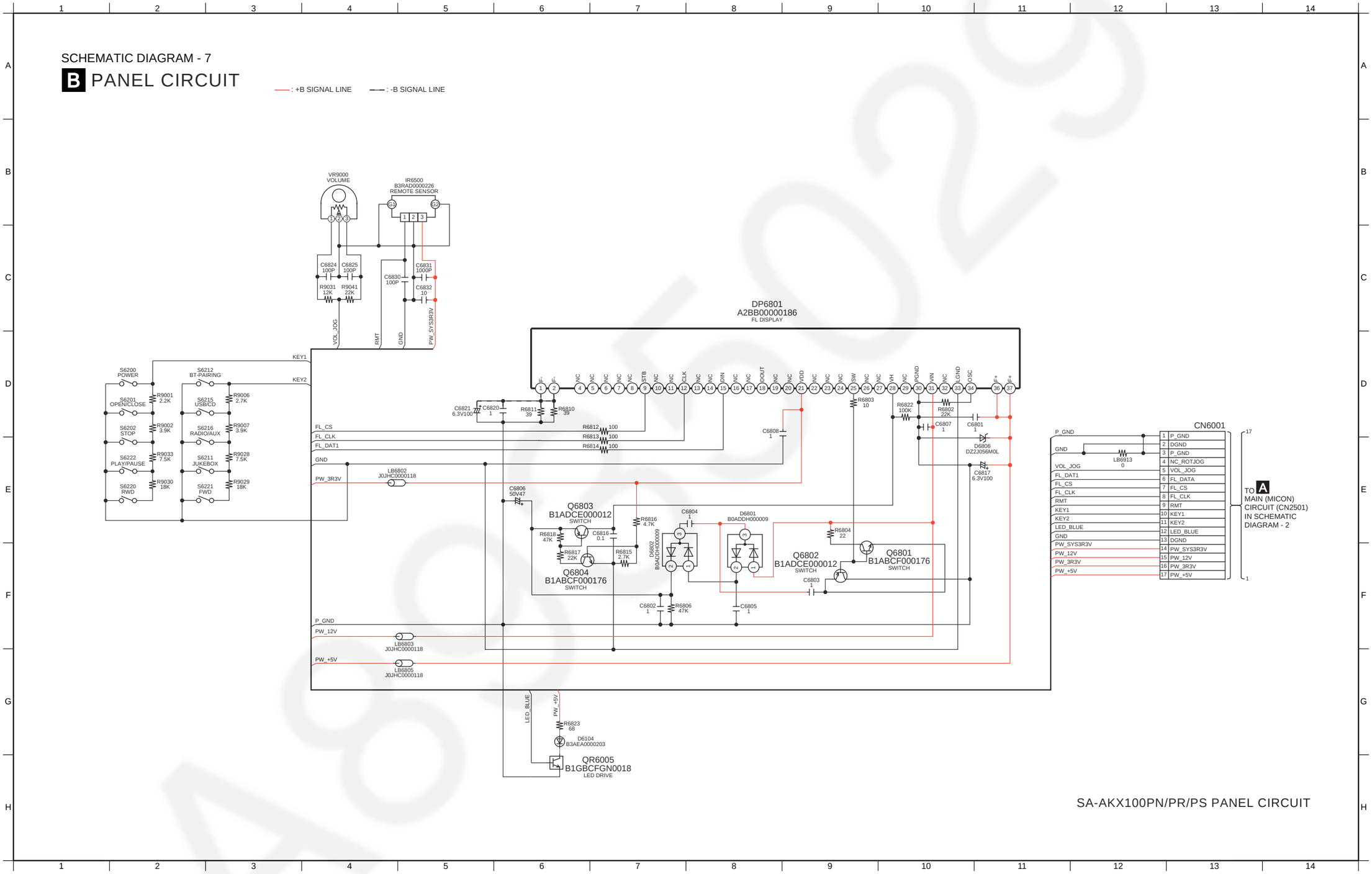

# 13 Printed Circuit Board

## 13.1. Main P.C.B.

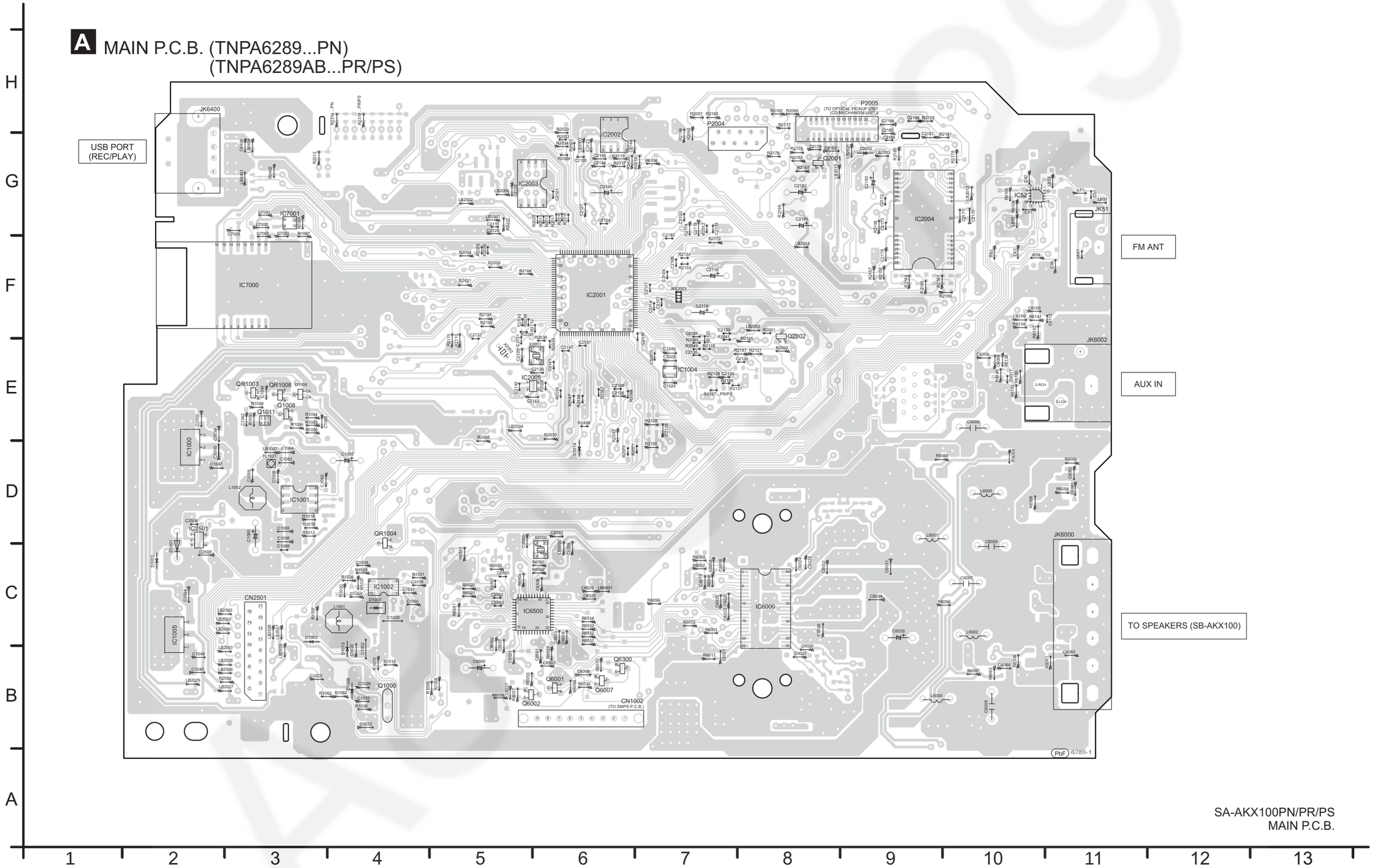


SA-AKX100PN/PR/PS
MAIN P.C.B.

## 13.2. Panel, CD Interface P.C.B.

**B** PANEL P.C.B. (TNPA6290)

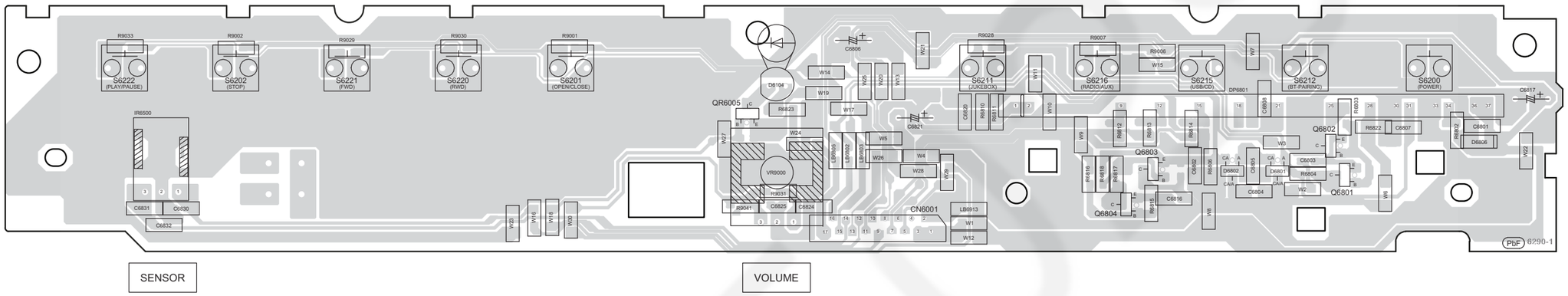


**C** CD INTERFACE P.C.B. (REP4945B)

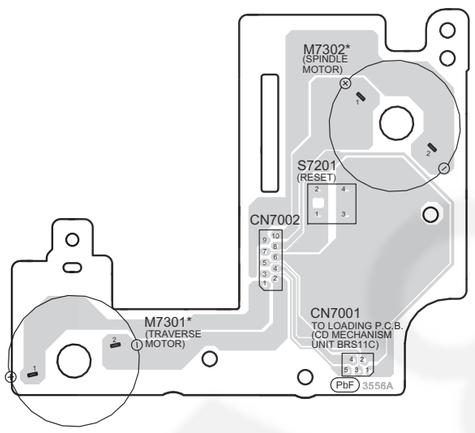


NOTE: " * " REF IS FOR INDICATION ONLY

SA-AKX100PN/PR/PS
PANEL / CD INTERFACE P.C.B.

Abgsb5029

# 14 Voltage and Waveform Measurement

## 14.1. Voltage Measurement

**Note:**

- Indication Voltage Values are in standard values for the unit measured by the DC electronic circuit tester (high-impedance) with the chassis taken as standard.
  Therefore, there may exist some errors in voltage values, depending on the internal impedance of the DC circuit tester.
- Circuit voltage and waveform described herein shall be regarded as reference information when probing defect point because it may differ from actual measuring value due to difference of Measuring instrument and its measuring condition and product itself.

### 14.1.1. Main P.C.B. (1/3)

| REF NO. | IC1000 | | | | | | | | | | | | | | | | | | | |
|---|---|---|---|---|---|---|---|---|---|---|---|---|---|---|---|---|---|---|---|---|
| MODE | 1 | 2 | 3 | | | | | | | | | | | | | | | | | |
| PLAY | 0 | 3.3 | 6 | | | | | | | | | | | | | | | | | |

| REF NO. | IC1001 | | | | | | | | | | | | | | | | | | | |
|---|---|---|---|---|---|---|---|---|---|---|---|---|---|---|---|---|---|---|---|---|
| MODE | 1 | 2 | 3 | 4 | 5 | 6 | 7 | 8 | | | | | | | | | | | | |
| CD PLAY | 21.8 | 32.7 | 2.9 | 0 | 0.5 | 0 | 0.8 | 0.3 | | | | | | | | | | | | |
| STANDBY | 21.8 | 32.7 | 2.9 | 0 | 0.5 | 0 | 0.8 | 0.3 | | | | | | | | | | | | |

| REF NO. | IC1002 | | | | | | | | | | | | | | | | | | | |
|---|---|---|---|---|---|---|---|---|---|---|---|---|---|---|---|---|---|---|---|---|
| MODE | 1 | 2 | 3 | 4 | 5 | 6 | 7 | 8 | 9 | 10 | | | | | | | | | | |
| CD PLAY | 21.8 | 32.7 | 0 | 2.3 | 0.5 | 0 | 0.8 | 0.9 | 0 | 15.6 | | | | | | | | | | |
| STANDBY | 21.8 | 32.7 | 0 | 2.3 | 0.5 | 0 | 0.8 | 0.9 | 0 | 15.6 | | | | | | | | | | |

| REF NO. | IC1004 | | | | | | | | | | | | | | | | | | | |
|---|---|---|---|---|---|---|---|---|---|---|---|---|---|---|---|---|---|---|---|---|
| MODE | 1 | 2 | 3 | 4 | | | | | | | | | | | | | | | | |
| CD PLAY | 3.2 | 0 | 1.6 | 3.2 | | | | | | | | | | | | | | | | |
| STANDBY | 3.2 | 0 | 1.6 | 3.2 | | | | | | | | | | | | | | | | |

| REF NO. | IC1005 | | | | | | | | | | | | | | | | | | | |
|---|---|---|---|---|---|---|---|---|---|---|---|---|---|---|---|---|---|---|---|---|
| MODE | 1 | 2 | 3 | | | | | | | | | | | | | | | | | |
| CD PLAY | 0 | 3.2 | 4.2 | | | | | | | | | | | | | | | | | |
| STANDBY | 0 | 3.2 | 4.2 | | | | | | | | | | | | | | | | | |

| REF NO. | IC2001 | | | | | | | | | | | | | | | | | | | |
|---|---|---|---|---|---|---|---|---|---|---|---|---|---|---|---|---|---|---|---|---|
| MODE | 1 | 2 | 3 | 4 | 5 | 6 | 7 | 8 | 9 | 10 | 11 | 12 | 13 | 14 | 15 | 16 | 17 | 18 | 19 | 20 |
| CD PLAY | 3.2 | 3.2 | 3.2 | 3.2 | 3.1 | 3.2 | 0 | 0 | 0 | 1.1 | 3.2 | 0 | 0 | 0 | 0 | 0 | 3.2 | 1.6 | 0 | 0 |
| STANDBY | 3.2 | 3.2 | 3.2 | 3.2 | 0 | 0 | 0 | 0 | 3.1 | 0 | 3.2 | 0 | 0 | 0 | 0 | 0 | 3.2 | 1.6 | 0 | 0 |

| REF NO. | IC2001 | | | | | | | | | | | | | | | | | | | |
|---|---|---|---|---|---|---|---|---|---|---|---|---|---|---|---|---|---|---|---|---|
| MODE | 21 | 22 | 23 | 24 | 25 | 26 | 27 | 28 | 29 | 30 | 31 | 32 | 33 | 34 | 35 | 36 | 37 | 38 | 39 | 40 |
| CD PLAY | 2.6 | 3.2 | 0.1 | 3.2 | 2.9 | 2.9 | 0 | 0 | 3.3 | 0 | 3.3 | 0.1 | 1.6 | 1.6 | 0.5 | 0.9 | 0.8 | 1.6 | 1.6 | 1 |
| STANDBY | 2.6 | 3.2 | 0 | 3.2 | 2.9 | 2.9 | 0 | 0 | 3.3 | 0 | 3.3 | 0 | 1.6 | 1.6 | 0 | 1.6 | 0.8 | 1.6 | 1.6 | 1 |

| REF NO. | IC2001 | | | | | | | | | | | | | | | | | | | |
|---|---|---|---|---|---|---|---|---|---|---|---|---|---|---|---|---|---|---|---|---|
| MODE | 41 | 42 | 43 | 44 | 45 | 46 | 47 | 48 | 49 | 50 | 51 | 52 | 53 | 54 | 55 | 56 | 57 | 58 | 59 | 60 |
| CD PLAY | 0 | 0 | 1.6 | 1.6 | 2 | 2 | 3.2 | 3.2 | 3.2 | 3.2 | 1.6 | 1.6 | 0 | 1.6 | 1.6 | 0 | 1.9 | 1.6 | 1.7 | 1.7 |
| STANDBY | 1 | 0 | 1.6 | 1.6 | 1.6 | 2 | 3.2 | 1.5 | 3.2 | 1.6 | 1.6 | 1.6 | 0 | 1.6 | 1.6 | 0 | 3.3 | 0 | 1.6 | 1.6 |

| REF NO. | IC2001 | | | | | | | | | | | | | | | | | | | |
|---|---|---|---|---|---|---|---|---|---|---|---|---|---|---|---|---|---|---|---|---|
| MODE | 61 | 62 | 63 | 64 | 65 | 66 | 67 | 68 | 69 | 70 | 71 | 72 | 73 | 74 | 75 | 76 | 77 | 78 | 79 | 80 |
| CD PLAY | 1.6 | 1.6 | 1.6 | 1.6 | 1.6 | 0 | 1.6 | 1.6 | 1.6 | 1.6 | 0 | 3.2 | 3.2 | 3.2 | 3.2 | 3.2 | 3.2 | 3.2 | 3.2 | 0 |
| STANDBY | 1.6 | 1.6 | 1.6 | 1.6 | 1.6 | 0 | 1.6 | 1.5 | 1.5 | 1.3 | 0 | 3.2 | 3.2 | 3.2 | 3.2 | 3.2 | 3.2 | 3.2 | 3.2 | 0 |

| REF NO. | IC2001 | | | | | | | | | | | | | | | | | | | |
|---|---|---|---|---|---|---|---|---|---|---|---|---|---|---|---|---|---|---|---|---|
| MODE | 81 | 82 | 83 | 84 | 85 | 86 | 87 | 88 | 89 | 90 | 91 | 92 | 93 | 94 | 95 | 96 | 97 | 98 | 99 | 100 |
| CD PLAY | 0.7 | 1.6 | 1.6 | 0 | 0 | 2.9 | 1.1 | 2.7 | 2.9 | 0.2 | 0.2 | 1.6 | 3.3 | 3.3 | 0 | 3.2 | 0 | 0 | 0 | 0 |
| STANDBY | 0 | 1.6 | 1.6 | 0 | 0 | 3.2 | 1.6 | 3.2 | 3.2 | 0 | 0 | 1.6 | 3.3 | 3.3 | 0 | 3.2 | 0 | 0 | 0 | 1.2 |

**AKX100PN/PR/PS MAIN P.C.B.**

## 14.1.2. Main P.C.B. (2/3)

| REF NO. | IC2001 | | | | | | | | | | | | | | | | | | | |
|---|---|---|---|---|---|---|---|---|---|---|---|---|---|---|---|---|---|---|---|---|
| MODE | 101 | 102 | 103 | 104 | 105 | 106 | 107 | 108 | 109 | 110 | 111 | 112 | 113 | 114 | 115 | 116 | 117 | 118 | 119 | 120 |
| CD PLAY | 3.2 | 3.2 | 0 | 0 | 3.2 | 0 | 0 | 3.2 | 3.2 | 1.6 | 1.6 | 1.6 | 0 | 0 | 0 | 3.3 | 3.2 | 3.2 | 3.2 | 3.2 |
| STANDBY | 2 | 2 | 2 | 0 | 3.1 | 2 | 0.2 | 3.2 | 1.2 | 1.2 | 1.1 | 1.2 | 3.2 | 3.2 | 3.2 | 1.2 | 1.4 | 3.2 | 3.2 | 3.2 |

| REF NO. | IC2001 | | | | | | | | | | | | | | | | | | | |
|---|---|---|---|---|---|---|---|---|---|---|---|---|---|---|---|---|---|---|---|---|
| MODE | 121 | 122 | 123 | 124 | 125 | 126 | 127 | 128 | | | | | | | | | | | | |
| CD PLAY | 1.8 | 3.3 | 0 | 1.5 | 1.4 | 0 | 1.4 | 1.4 | | | | | | | | | | | | |
| STANDBY | 1.8 | 1 | 0 | 1.4 | 1.5 | 1.5 | 1.4 | 1.4 | | | | | | | | | | | | |

| REF NO. | IC2004 | | | | | | | | | | | | | | | | | | | |
|---|---|---|---|---|---|---|---|---|---|---|---|---|---|---|---|---|---|---|---|---|
| MODE | 1 | 2 | 3 | 4 | 5 | 6 | 7 | 8 | 9 | 10 | 11 | 12 | 13 | 14 | 15 | 16 | 17 | 18 | 19 | 20 |
| CD PLAY | 1.6 | 5.9 | 2.6 | 1.6 | 2.6 | 0 | 0 | 5.9 | 0 | 0 | 3.1 | 2.9 | 2.9 | 3.1 | 3 | 3.1 | 3.6 | 2.5 | 5.9 | 2.4 |
| STANDBY | 1.6 | 5.9 | 2.6 | 1.6 | 2.6 | 0 | 0 | 5.9 | 0 | 0 | 3 | 3 | 3 | 3 | 3 | 3 | 3 | 3 | 5.9 | 2.4 |

| REF NO. | IC2004 | | | | | | | | | | | | | | | | | | | |
|---|---|---|---|---|---|---|---|---|---|---|---|---|---|---|---|---|---|---|---|---|
| MODE | 21 | 22 | 23 | 24 | 25 | 26 | 27 | 28 | 29 | 30 | | | | | | | | | | |
| CD PLAY | 1.5 | 0 | 1.8 | 5.9 | 5.9 | 1.6 | 1.6 | 3.3 | 0 | 0 | | | | | | | | | | |
| STANDBY | 1.5 | 0 | 1.6 | 5.9 | 5.9 | 1.6 | 1.6 | 3.3 | 0 | 0 | | | | | | | | | | |

| REF NO. | IC2005 | | | | | | | | | | | | | | | | | | | |
|---|---|---|---|---|---|---|---|---|---|---|---|---|---|---|---|---|---|---|---|---|
| MODE | 1 | 2 | 3 | 4 | | | | | | | | | | | | | | | | |
| POWER ON | 0 | 3.3 | 0 | 3.3 | | | | | | | | | | | | | | | | |

| REF NO. | IC2501 | | | | | | | | | | | | | | | | | | | |
|---|---|---|---|---|---|---|---|---|---|---|---|---|---|---|---|---|---|---|---|---|
| MODE | 1 | 2 | 3 | 4 | 5 | | | | | | | | | | | | | | | |
| USB A ON | 5 | 0 | 3.3 | 3.3 | 5 | | | | | | | | | | | | | | | |

| REF NO. | IC6000 | | | | | | | | | | | | | | | | | | | |
|---|---|---|---|---|---|---|---|---|---|---|---|---|---|---|---|---|---|---|---|---|
| MODE | 1 | 2 | 3 | 4 | 5 | 6 | 7 | 8 | 9 | 10 | 11 | 12 | 13 | 14 | 15 | 16 | 17 | 18 | 19 | 20 |
| CD PLAY | 12.5 | 12.5 | 1.2 | 3.3 | 1.7 | 1.7 | 2.7 | 2.7 | 3.3 | 0 | 0 | 0 | 7.8 | 1.7 | 1.7 | 3.3 | 3.3 | 3.3 | 0 | 2.8 |
| STANDBY | 12.6 | 12.5 | 1.2 | 3.3 | 1.7 | 1.7 | 2.7 | 3.3 | 0 | 0 | 0 | 0 | 7.8 | 1.7 | 1.7 | 3.3 | 3.3 | 3.3 | 0 | 2.8 |

| REF NO. | IC6000 | | | | | | | | | | | | | | | | | | | |
|---|---|---|---|---|---|---|---|---|---|---|---|---|---|---|---|---|---|---|---|---|
| MODE | 21 | 22 | 23 | 24 | 25 | 26 | 27 | 28 | 29 | 30 | 31 | 32 | 33 | 34 | 35 | 36 | 37 | 38 | 39 | 40 |
| CD PLAY | 0 | 12.6 | 27.9 | 27.7 | 0 | 0 | 16.3 | 16.3 | 32.6 | 32.6 | 1.4 | 16.3 | 0 | 0 | 16.3 | 32.6 | 32.6 | 32.6 | 16.3 | 16.3 |
| STANDBY | 0 | 12.6 | 27.9 | 27.9 | 0 | 0 | 16.3 | 16.3 | 32.6 | 32.6 | 2.3 | 16.3 | 0 | 0 | 16.3 | 32.6 | 32.6 | 32.6 | 16.3 | 16.3 |

| REF NO. | IC6000 | | | | | | | | | | | | | | | | | | | |
|---|---|---|---|---|---|---|---|---|---|---|---|---|---|---|---|---|---|---|---|---|
| MODE | 41 | 42 | 43 | 44 | | | | | | | | | | | | | | | | |
| CD PLAY | 0 | 0 | 27.8 | 27.8 | | | | | | | | | | | | | | | | |
| STANDBY | 0 | 0 | 27.9 | 27.9 | | | | | | | | | | | | | | | | |

| REF NO. | IC7001 | | | | | | | | | | | | | | | | | | | |
|---|---|---|---|---|---|---|---|---|---|---|---|---|---|---|---|---|---|---|---|---|
| MODE | 1 | 2 | 3 | 4 | | | | | | | | | | | | | | | | |
| PLAY | 3.3 | 0 | 5 | 5 | | | | | | | | | | | | | | | | |

| REF NO. | Q1000 | | | | Q2001 | | | | Q6001 | | | | Q6002 | | | | Q6007 | | | |
|---|---|---|---|---|---|---|---|---|---|---|---|---|---|---|---|---|---|---|---|---|
| MODE | E | C | B | | E | C | B | | E | C | B | | E | C | B | | E | C | B | |
| CD PLAY | 12.8 | 16.1 | 13.4 | | 2.9 | 1.9 | 2.2 | | 0 | 3.2 | 0 | | 32.6 | 0 | 12 | | 16.3 | 11.7 | 0 | |
| STANDBY | 12.8 | 16.1 | 13.4 | | 2.9 | 1.9 | 2.2 | | 0 | 3.2 | 0 | | 32.6 | 0 | 12 | | 16.3 | 11.7 | 0 | |

| REF NO. | Q6300 | | | | | | | | | | | | | | | | | | | |
|---|---|---|---|---|---|---|---|---|---|---|---|---|---|---|---|---|---|---|---|---|
| MODE | E | C | B | | | | | | | | | | | | | | | | | |
| CD PLAY | 16.3 | 11.7 | 0 | | | | | | | | | | | | | | | | | |
| STANDBY | 16.3 | 11.7 | 0 | | | | | | | | | | | | | | | | | |

| REF NO. | Q1008 | | | | Q1011 | | | | | | | QR1003 | | | | QR1004 | | | | |
|---|---|---|---|---|---|---|---|---|---|---|---|---|---|---|---|---|---|---|---|---|
| MODE | E | C | B | | 1 | 2 | 3 | 4 | 5 | 6 | | E | C | B | | E | C | B | | |
| POWER ON | 12 | 0 | 12 | | 12 | 12 | 12 | 12 | 12 | 12 | | 0 | 0 | 3.3 | | 0 | 0 | 3.3 | | |

**AKX100PN/PR/PS MAIN P.C.B.**

### 14.1.3. Main P.C.B. (3/3)

| REF NO. | QR1008 | | | | | | | | | | | | | | | | | | |
|---|---|---|---|---|---|---|---|---|---|---|---|---|---|---|---|---|---|---|---|
| MODE | E | C | B | | | | | | | | | | | | | | | | |
| POWER ON | 0 | 3.3 | 0 | | | | | | | | | | | | | | | | |
| **AKX100PN/PR/PS MAIN P.C.B.** | | | | | | | | | | | | | | | | | | | |

### 14.1.4. Panel P.C.B.

| REF NO. | QR6005 | | | | | | | | | | | | | | | | | | |
|---|---|---|---|---|---|---|---|---|---|---|---|---|---|---|---|---|---|---|---|
| MODE | E | C | B | | | | | | | | | | | | | | | | |
| CD PLAY | 0 | 0.2 | 3.2 | | | | | | | | | | | | | | | | |
| STANDBY | 0 | 0.2 | 3.2 | | | | | | | | | | | | | | | | |
| **AKX100PN/PR/PS PANEL P.C.B.** | | | | | | | | | | | | | | | | | | | |

A8935029

A89350229

# 15 Exploded View and Replacement Parts List

## 15.1. Cabinet Parts Location 1

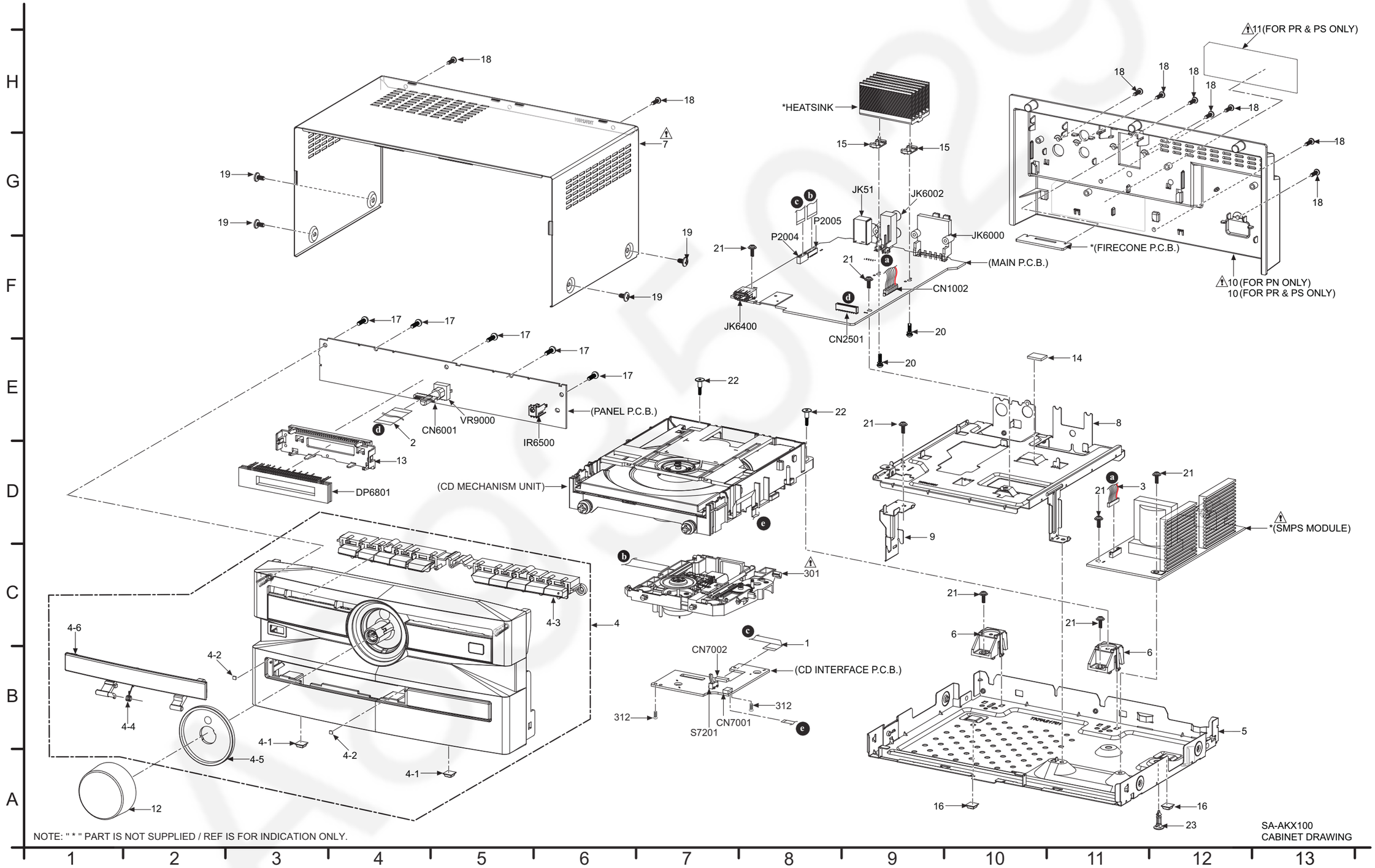

## 15.2. Packaging

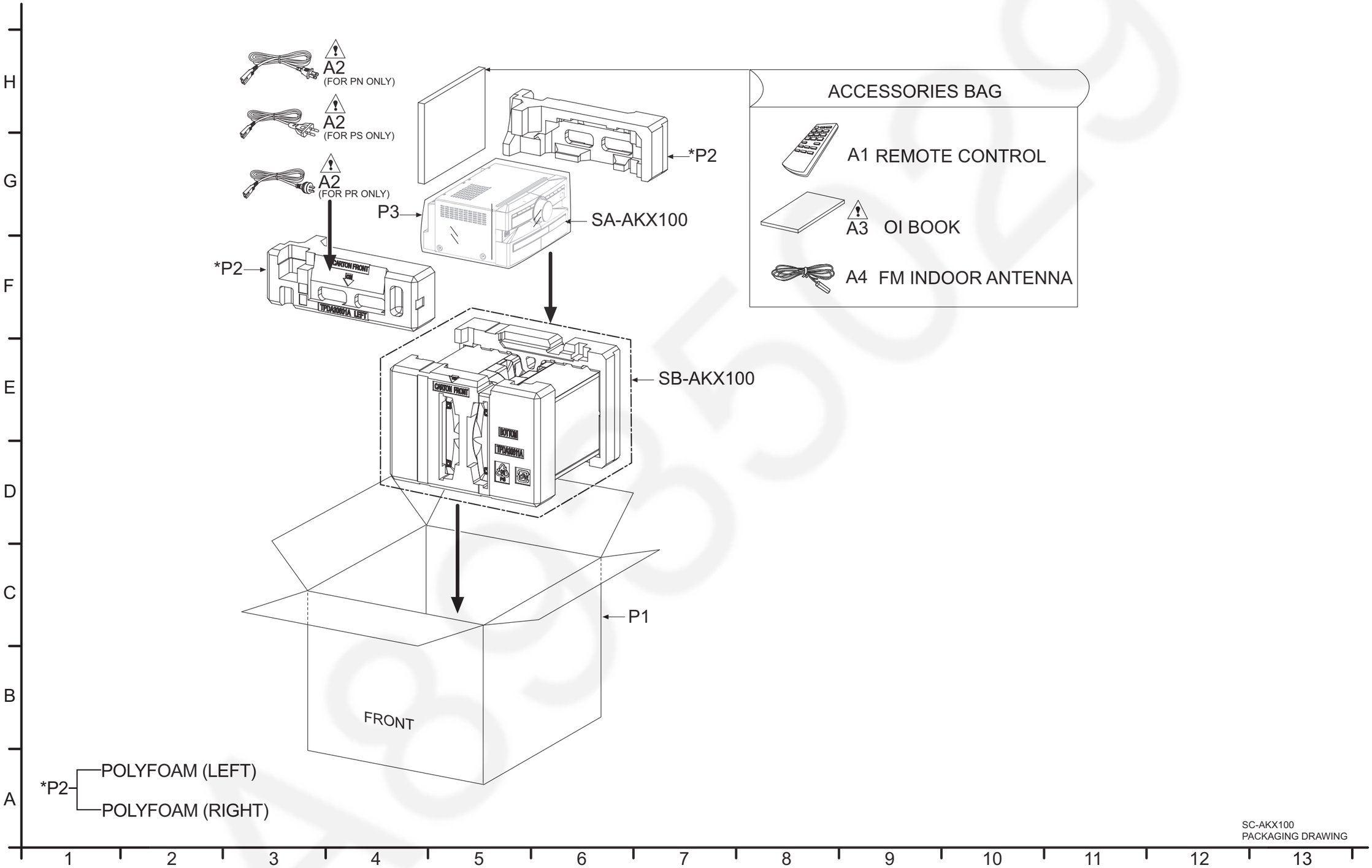

## 15.3. Mechanical Replacement Part List

**Important Safety Notice**

*Components identified by ⚠ mark have special characteristics important for safety.*
*When replacing any of these components, use only manufacturer's specified parts.*

**RTL (Retention Time Limited)**

**Note:** The marking (RTL) indicates that the Retention Time is Limited for this item.
After the discontinuation of this assembly in production, the item will continue to be available for a specific period of time. The retention period of availability is dependant on the type of assembly, and in accordance with the laws governing part and product retention. After the end of this period, the assembly will no longer be available.

**Note:**

- When replacing any of these components, be sure to use only manufacturer's specified parts shown in the replacement part list.
- The parenthesized indications on the Remarks column specify the destination & product color (Refer to the cover page for the information).
- Parts without these indications shall be used for all areas.
- This product uses a laser diode. Refer to "Precaution of Laser Diode".
- All parts mentioned are supplied by PAVCJM unless indicated likewise.
- Reference for O/I book languages are as follows:

| | | | | | | | |
|---|---|---|---|---|---|---|---|
| Ar: | Arabic | Du: | Dutch | It: | Italian | Sp: | Spanish |
| Cf: | Canadian French | En: | English | Ko: | Korean | Sw: | Swedish |
| Cz: | Czech | Fr: | French | Po: | Polish | Co: | Traditional Chinese |
| Da: | Danish | Ge: | German | Ru: | Russian | Cn: | Simplified Chinese |
| Pe: | Persian | Ur: | Ukraine | Pr: | Portuguese | Fi: | Finnish |

| Safety | Ref. No. | Part No. | Part Name & Description | Qty | Remarks |
|---|---|---|---|---|---|
| | | | | | |
| | | | CABINET AND CHASSIS | | |
| | | | | | |
| | 1 | REE1730 | 10P FFC (CD INTERFACE-MAIN) | 1 | |
| | 2 | TZH3QKZ001 | 17P FFC (PANEL-MAIN) | 1 | |
| | 3 | TNMX022 | 9P WIRE (MAIN-SMPS) | 1 | |
| | 4 | TTPA0619 | FRONT PANEL UNIT | 1 | |
| | 4-1 | RKAX0042-K | LEG CUSHION | 2 | |
| | 4-2 | RMGX0033 | DAMPER | 2 | |
| | 4-3 | TBXA60101 | FUNCTION BUTTON | 1 | |
| | 4-4 | TESD131 | CD LID SPRING | 1 | |
| | 4-5 | TKKC54691 | LIGHTING PIECE | 1 | |
| | 4-6 | TKPB65701 | CD LID | 1 | |
| | 5 | TYL0005 | BOTTOM CHASSIS UNIT | 1 | |
| | 6 | TEKL001 | CD MECHA SUPPORT | 2 | |
| ⚠ | 7 | TKFA22101 | TOP CABINET | 1 | |
| | 8 | TKFA21801 | INNER CHASSIS | 1 | |
| | 9 | TKFA21901 | CHASSIS SUPPORT | 1 | |
| ⚠ | 10 | TKFE35001 | REAR CABINET | 1 | PN |
| | 10 | TKFE35001A | REAR CABINET | 1 | PS, PR |
| ⚠ | 11 | TBMK4271 | NAME PLATE | 1 | PS |
| ⚠ | 11 | TBMK4271A | NAME PLATE | 1 | PR |
| | 12 | TBXA60201 | VOLUME KNOB | 1 | |
| | 13 | RMN1049-1 | FL HOLDER | 1 | |
| | 14 | RSC1228A | THERMAL PAD | 1 | |

| Safety | Ref. No. | Part No. | Part Name & Description | Qty | Remarks |
|---|---|---|---|---|---|
| | 15 | RMZX1022-1 | PCB SPACER | 2 | |
| | 16 | RKAX0042-K | LEG CUSHION | 2 | |
| | 17 | RHD26046-L | SCREW | 5 | |
| | 18 | XTB3+10JFJ-J | SCREW | 9 | |
| | 19 | RHD30007-K2J | SCREW | 4 | |
| | 20 | RHD26078 | SCREW | 2 | |
| | 21 | RHD30111-31 | SCREW | 7 | |
| | 22 | RHDX031008 | SCREW | 2 | |
| | 23 | RMNX0298 | PCB SPACER | 1 | |
| | | | | | |
| | | | TRAVERSE DECK | | |
| | | | | | |
| ⚠ | 301 | TXQ0011 | TRAVERSE ASS'Y | 1 | (E.S.D) |
| | 312 | XTN2+6GFJ | SCREW | 2 | |
| | | | | | |
| | | | PACKAGING MATERIALS | | |
| | | | | | |
| | P1 | TPCD49301B | PACKING CASE | 1 | PN |
| | P1 | TPCD49401A | PACKING CASE | 1 | PS |
| | P1 | TPCD49501A | PACKING CASE | 1 | PR |
| | P2 | TPDA30601 | POLYFOAM | 1 | |
| | P3 | RPH0311A | MIRAMAT SHEET | 1 | |
| | | | | | |
| | | | ACCESSORIES | | |
| | | | | | |
| | A1 | N2QAYA000125 | REMOTE CONTROL | 1 | |
| ⚠ | A2 | K2CA2YY00039 | AC CORD | 1 | PR |
| ⚠ | A2 | K2CB2CB00022 | AC CORD | 1 | PN |
| ⚠ | A2 | K2CQ2YY00119 | AC CORD | 1 | PS |
| ⚠ | A3 | TQBJ0967 | O/I (En/Sp) | 1 | |

| Safety | Ref. No. | Part No. | Part Name & Description | Qty | Remarks |
|---|---|---|---|---|---|
| | A4 | RSAX0002 | FM INDOOR ANTENNA | 1 | |

A89350229

## 15.4. Electrical Replacement Parts List

**Important Safety Notice**

*Components identified by ⚠ mark have special characteristics important for safety.*
*When replacing any of these components, use only manufacturer's specified parts.*

**RTL (Retention Time Limited)**

**Note:** The marking (RTL) indicates that the Retention Time is Limited for this item.
After the discontinuation of this assembly in production, the item will continue to be available for a specific period of time. The retention period of availability is dependant on the type of assembly, and in accordance with the laws governing part and product retention. After the end of this period, the assembly will no longer be available.

**Note:**

- When replacing any of these components, be sure to use only manufacturer's specified parts shown in the replacement part list.
- The parenthesized indications on the Remarks column specify the destination & product color (Refer to the cover page for the information).
- Parts without these indications shall be used for all areas.
- This product uses a laser diode. Refer to "Precaution of Laser Diode".
- Capacitor value are in microfarads (uF) unless specified otherwise, P=Pico-farads (pF), F=Farads.
- Resistance values are in ohms, unless specified otherwise, 1K=1000 (OHM).
- All parts mentioned are supplied by PAVCJM unless indicated likewise.
- Parts mentioned [SPG] in the Remarks column are supplied by JAPAN.

**E.S.D. standards for Electrostatically Sensitive Devices, refer to "PREVENTION OF ELECTROSTATIC DISCHARGE (ESD) TO ELECTROSTATIC SENSITIVE (ES) DEVICES" section.**

| Safety | Ref. No. | Part No. | Part Name & Description | Qty | Remarks |
|---|---|---|---|---|---|
| | | | | | |
| | | | PRINTED CIRCUIT BOARDS | | |
| | | | | | |
| | PCB1 | TNPA6289 | MAIN P.C.B | 1 | (RTL) PN |
| | PCB1 | TNPA6289AB | MAIN P.C.B | 1 | (RTL) PS, PR |
| | PCB2 | TNPA6290 | PANEL P.C.B | 1 | (RTL) |
| | PCB3 | REP4945B | CD INTERFACE P.C.B | 1 | (RTL) |
| ⚠ | PCB4 | N0AE1GN00002 | SMPS MODULE | 1 | PN |
| ⚠ | PCB4 | N0AE1GN00003 | SMPS MODULE | 1 | PS,PR |
| | | | | | |
| | | | INTEGRATED CIRCUITS | | |
| | | | | | |
| | IC52 | VUEALLPT087 | IC | 1 | (E.S.D) |
| | IC1000 | C0DBGYY03909 | IC | 1 | (E.S.D) |
| | IC1001 | C0DBAYY01996 | IC | 1 | (E.S.D) |
| | IC1002 | C0DBAYY01594 | IC | 1 | (E.S.D) |
| | IC1004 | C0DBGYY00911 | IC | 1 | (E.S.D) |
| | IC1005 | C0DBGYY03909 | IC | 1 | (E.S.D) |
| | IC2001 | C1AB00004188 | IC | 1 | (E.S.D) |
| | IC2002 | RFKWEKX100LM | IC | 1 | (E.S.D) |
| | IC2003 | RFKWFKX100LM | IC | 1 | (E.S.D) |
| | IC2004 | C0GBY0000213 | IC | 1 | (E.S.D) |
| | IC2005 | C0EBY0000664 | IC | 1 | (E.S.D) |
| | IC2501 | C0DBZYY00716 | IC | 1 | (E.S.D) |
| | IC6000 | C1AB00003994 | IC | 1 | (E.S.D) |
| | IC6500 | VUEALLPT090 | IC | 1 | (E.S.D) |
| | IC7000 | RSNE031B0 | BT | 1 | (E.S.D) |
| | IC7001 | C0DBGYY00969 | IC | 1 | (E.S.D) |
| | | | | | |

| Safety | Ref. No. | Part No. | Part Name & Description | Qty | Remarks |
|---|---|---|---|---|---|
| | | | TRANSISTORS | | |
| | | | | | |
| | Q1000 | B1AAJC000019 | TRANSISTOR | 1 | |
| | Q1008 | B1ADCE000012 | TRANSISTOR | 1 | |
| | Q1011 | MTM761230LBF | TRANSISTOR | 1 | |
| | Q2001 | B1ADCF000001 | TRANSISTOR | 1 | |
| | Q2002 | B1ABCF000176 | TRANSISTOR | 1 | |
| | Q6001 | B1ABCF000176 | TRANSISTOR | 1 | |
| | Q6002 | DSA200100L | TRANSISTOR | 1 | |
| | Q6007 | B1ABCF000176 | TRANSISTOR | 1 | |
| | Q6300 | B1ABCF000176 | TRANSISTOR | 1 | |
| | Q6801 | B1ABCF000176 | TRANSISTOR | 1 | |
| | Q6802 | B1ADCE000012 | TRANSISTOR | 1 | |
| | Q6803 | B1ADCE000012 | TRANSISTOR | 1 | |
| | Q6804 | B1ABCF000176 | TRANSISTOR | 1 | |
| | QR1003 | B1GBCFJJ0041 | TRANSISTOR | 1 | |
| | QR1004 | B1GBCFJJ0041 | TRANSISTOR | 1 | |
| | QR1008 | B1GBCFJJ0041 | TRANSISTOR | 1 | |
| | QR6005 | B1GBCFGN0018 | TRANSISTOR | 1 | |
| | | | | | |
| | | | DIODES | | |
| | | | | | |
| | D1000 | B0JCPG000032 | DIODE | 1 | |
| | D1001 | B0EAKM000117 | DIODE | 1 | |
| | D1002 | DB2J20800L | DIODE | 1 | |
| | D1003 | DZ2J075M0L | DIODE | 1 | |
| | D1004 | B0ADDJ000032 | DIODE | 1 | |
| | D1005 | DZ2J056M0L | DIODE | 1 | |
| | D1013 | DZ2J150M0L | DIODE | 1 | |
| | D1014 | DA2J10100L | DIODE | 1 | |
| | D2002 | DA2J10100L | DIODE | 1 | |
| | D6104 | B3AEA0000203 | DIODE | 1 | |
| | D6801 | B0ADDH000009 | DIODE | 1 | |
| | D6802 | B0ADDH000009 | DIODE | 1 | |
| | D6806 | DZ2J056M0L | DIODE | 1 | |

| Safety | Ref. No. | Part No. | Part Name & Description | Qty | Remarks |
|---|---|---|---|---|---|
| | | | | | |
| | | | VARIABLE RESIS-TORS | | |
| | | | | | |
| | VR9000 | K9AA024Y0012 | VOLUME JOG | 1 | |
| | | | | | |
| | | | ESD SUPRESSOR | | |
| | | | | | |
| | VA51 | EZAEG2A50AX | ESD SUPRESSOR | 1 | |
| | | | | | |
| | | | SWITCHES | | |
| | | | | | |
| | S6200 | EVQ21405RJ | SW | 1 | |
| | S6201 | EVQ21405RJ | SW | 1 | |
| | S6202 | EVQ21405RJ | SW | 1 | |
| | S6211 | EVQ21405RJ | SW | 1 | |
| | S6212 | EVQ21405RJ | SW | 1 | |
| | S6215 | EVQ21405RJ | SW | 1 | |
| | S6216 | EVQ21405RJ | SW | 1 | |
| | S6220 | EVQ21405RJ | SW | 1 | |
| | S6221 | EVQ21405RJ | SW | 1 | |
| | S6222 | EVQ21405RJ | SW | 1 | |
| | S7201 | K0L1BA000158 | SW | 1 | |
| | | | | | |
| | | | CONNECTORS | | |
| | | | | | |
| | CN1002 | K1YA09000001 | 9P CONNECTOR | 1 | |
| | CN2501 | K1MN17A00040 | 17P CONNECTOR | 1 | |
| | CN6001 | K1MN17A00040 | 17P CONNECTOR | 1 | |
| | CN7001 | K1MY05BA0565 | 5P CONNECTOR | 1 | |
| | CN7002 | K1MN10B00016 | 10P CONNECTOR | 1 | |
| | P2004 | K1MN10A00011 | 10P CONNECTOR | 1 | |
| | P2005 | K1MY24A00001 | 24P CONNECTOR | 1 | |
| | | | | | |
| | | | COILS AND INDUC-TORS | | |
| | | | | | |
| | L51 | G1CR18JA0020 | INDUCTOR | 1 | |
| | L1001 | G1C330MA0426 | INDUCTOR | 1 | |
| | L1002 | G1C330MA0426 | INDUCTOR | 1 | |
| | L6000 | G0A100H00032 | CHOKE COIL | 1 | |
| | L6001 | G0A100H00032 | CHOKE COIL | 1 | |
| | L6002 | G0A100H00032 | CHOKE COIL | 1 | |
| | L6005 | G0A100H00032 | CHOKE COIL | 1 | |
| | L7000 | J0JYC0000305 | INDUCTOR | 1 | |
| | LB51 | J0JYC0000656 | INDUCTOR | 1 | |
| | LB53 | J0JYC0000656 | INDUCTOR | 1 | |
| | LB2002 | J0JYC0000656 | INDUCTOR | 1 | |
| | LB2003 | J0JYC0000656 | INDUCTOR | 1 | |
| | LB2004 | J0JYC0000656 | INDUCTOR | 1 | |
| | LB2006 | J0JYC0000656 | INDUCTOR | 1 | |
| | LB2007 | J0JYC0000656 | INDUCTOR | 1 | |
| | LB2012 | J0JHC0000045 | INDUCTOR | 1 | |
| | LB2013 | J0JHC0000045 | INDUCTOR | 1 | |
| | LB2014 | J0JBC0000134 | INDUCTOR | 1 | |
| | LB2015 | J0JCC0000286 | INDUCTOR | 1 | |
| | LB2021 | J0JYC0000656 | INDUCTOR | 1 | |
| | LB6401 | J0JHC0000118 | INDUCTOR | 1 | |
| | LB6404 | J0JHC0000118 | INDUCTOR | 1 | |
| | LB6500 | J0JYC0000656 | INDUCTOR | 1 | |
| | LB6501 | J0JYC0000656 | INDUCTOR | 1 | |
| | LB6502 | J0JYC0000656 | INDUCTOR | 1 | |
| | LB6802 | J0JHC0000118 | INDUCTOR | 1 | |
| | LB6803 | J0JHC0000118 | INDUCTOR | 1 | |
| | LB6805 | J0JHC0000118 | INDUCTOR | 1 | |
| | | | | | |
| | | | FL DISPLAY | | |
| | | | | | |
| | DP6801 | A2BB00000186 | FL DISPLAY | 1 | |
| | | | | | |
| | | | OSCILLATORS | | |
| | | | | | |
| | X2001 | H0J169500045 | OSCILLATOR | 1 | |
| | X2002 | H0A327200191 | OSCILLATOR | 1 | |

| Safety | Ref. No. | Part No. | Part Name & Description | Qty | Remarks |
|---|---|---|---|---|---|
| | X6500 | H0J245500110 | OSCILLATOR | 1 | |
| | | | | | |
| | | | JACKS | | |
| | | | | | |
| | JK51 | K4ZZ01000276 | CONNECTOR | 1 | |
| | JK6000 | K4AC04B00030 | JK SPEAKER | 1 | |
| | JK6002 | K2HA2YYA0009 | JK | 1 | |
| | JK6400 | K1FY104B0076 | CONNECTOR | 1 | |
| | | | | | |
| | | | CHIP JUMPERS | | |
| | | | | | |
| | LB52 | D0GBR00J0004 | 0 1/10W | 1 | |
| | LB1007 | D0GBR00J0004 | 0 1/10W | 1 | |
| | LB2010 | D0GBR00J0004 | 0 1/10W | 1 | |
| | LB2026 | D0GBR00J0004 | 0 1/10W | 1 | |
| | LB2027 | D0GBR00J0004 | 0 1/10W | 1 | |
| | LB2029 | D0GBR00J0004 | 0 1/10W | 1 | |
| | LB2556 | D0GBR00J0004 | 0 1/10W | 1 | |
| | LB2557 | D0GBR00J0004 | 0 1/10W | 1 | |
| | LB2558 | D0GBR00J0004 | 0 1/10W | 1 | |
| | LB2559 | D0GBR00J0004 | 0 1/10W | 1 | |
| | LB2560 | D0GBR00J0004 | 0 1/10W | 1 | |
| | LB2561 | D0GBR00J0004 | 0 1/10W | 1 | |
| | LB2562 | D0GBR00J0004 | 0 1/10W | 1 | |
| | LB2563 | D0GBR00J0004 | 0 1/10W | 1 | |
| | LB6913 | D0GBR00J0004 | 0 1/10W | 1 | |
| | W1 | D0GBR00J0004 | 0 1/10W | 1 | |
| | W2 | D0GDR00J0004 | 0 1/8W | 1 | |
| | W3 | D0GDR00J0004 | 0 1/8W | 1 | |
| | W4 | D0GFR00J0005 | 0 1/4W | 1 | |
| | W5 | D0GFR00J0005 | 0 1/4W | 1 | |
| | W6 | D0GFR00J0005 | 0 1/4W | 1 | |
| | W7 | D0GFR00J0005 | 0 1/4W | 1 | |
| | W8 | D0GFR00J0005 | 0 1/4W | 1 | |
| | W9 | D0GFR00J0005 | 0 1/4W | 1 | |
| | W10 | D0GFR00J0005 | 0 1/4W | 1 | |
| | W11 | D0GFR00J0005 | 0 1/4W | 1 | |
| | W12 | D0GBR00J0004 | 0 1/10W | 1 | |
| | W13 | D0GFR00J0005 | 0 1/4W | 1 | |
| | W14 | D0GFR00J0005 | 0 1/4W | 1 | |
| | W15 | D0GBR00J0004 | 0 1/10W | 1 | |
| | W16 | D0GDR00J0004 | 0 1/8W | 1 | |
| | W17 | D0GFR00J0005 | 0 1/4W | 1 | |
| | W18 | D0GDR00J0004 | 0 1/8W | 1 | |
| | W19 | D0GFR00J0005 | 0 1/4W | 1 | |
| | W20 | D0GFR00J0005 | 0 1/4W | 1 | |
| | W21 | D0GFR00J0005 | 0 1/4W | 1 | |
| | W22 | D0GFR00J0005 | 0 1/4W | 1 | |
| | W23 | D0GFR00J0005 | 0 1/4W | 1 | |
| | W24 | D0GFR00J0005 | 0 1/4W | 1 | |
| | W25 | D0GFR00J0005 | 0 1/4W | 1 | |
| | W26 | D0GDR00J0004 | 0 1/8W | 1 | |
| | W27 | D0GBR00J0004 | 0 1/10W | 1 | |
| | W28 | D0GFR00J0005 | 0 1/4W | 1 | |
| | W29 | D0GDR00J0004 | 0 1/8W | 1 | |
| | W30 | D0GFR00J0005 | 0 1/4W | 1 | |
| | | | | | |
| | | | REMOTE SENSOR | | |
| | | | | | |
| | IR6500 | B3RAD0000226 | REMOTE SENSOR | 1 | |
| | | | | | |
| | | | RESISTORS | | |
| | | | | | |
| | LB2005 | D0GB100JA065 | 10 1/10W | 1 | |
| | R52 | D0GB221JA065 | 220 1/10W | 1 | |
| | R59 | D0GB222JA065 | 2.2K 1/10W | 1 | |
| | R1006 | D0GB101JA065 | 100 1/10W | 1 | |
| | R1007 | D0GB473JA065 | 47K 1/10W | 1 | |
| | R1008 | D0GB101JA065 | 100 1/10W | 1 | |
| | R1015 | D0GB101JA065 | 100 1/10W | 1 | |
| | R1016 | D1BB3902A074 | 39K 1/10W | 1 | |
| | R1017 | D1BB1502A074 | 15K 1/10W | 1 | |
| | R1018 | D1BB1002A074 | 10K 1/10W | 1 | |

| Safety | Ref. No. | Part No. | Part Name & Description | Qty | Remarks |
|---|---|---|---|---|---|
| | R1026 | D0GB104JA065 | 100K 1/10W | 1 | |
| | R1027 | D1BB1002A074 | 10K 1/10W | 1 | |
| | R1028 | D1BB9101A074 | 9.1K 1/10W | 1 | |
| | R1030 | D0GB103JA065 | 10K 1/10W | 1 | |
| | R1031 | D0GB224JA065 | 220K 1/10W | 1 | |
| | R1038 | D0GB222JA065 | 2.2K 1/10W | 1 | |
| | R1049 | D0GB104JA065 | 100K 1/10W | 1 | |
| | R1050 | D0GB104JA065 | 100K 1/10W | 1 | |
| | R1053 | D0GB2R2JA065 | 2.2 1/10W | 1 | |
| | R1054 | D0GB2R2JA065 | 2.2 1/10W | 1 | |
| | R1055 | D0GB2R2JA065 | 2.2 1/10W | 1 | |
| | R1056 | D0GB271JA065 | 270 1/10W | 1 | |
| | R1060 | D0GBR00J0004 | 0 1/10W | 1 | |
| | R1062 | D0GB103JA065 | 10K 1/10W | 1 | |
| | R1067 | J0JYC0000656 | INDUCTOR | 1 | |
| | R1070 | D0GB222JA065 | 2.2K 1/10W | 1 | |
| | R2001 | D0GA103JA023 | 10K 1/16W | 1 | |
| | R2002 | D0GB334JA065 | 330K 1/10W | 1 | |
| | R2004 | D0GBR00J0004 | 0 1/10W | 1 | |
| | R2006 | D0GBR00J0004 | 0 1/10W | 1 | |
| | R2010 | D0GB103JA065 | 10K 1/10W | 1 | |
| | R2012 | D0GA471JA023 | 470 1/16W | 1 | |
| | R2015 | D0GAR00J0005 | 0 1/16W | 1 | |
| | R2016 | D0GAR00J0005 | 0 1/16W | 1 | |
| | R2017 | D0GAR00J0005 | 0 1/16W | 1 | |
| | R2018 | D0GAR00J0005 | 0 1/16W | 1 | |
| | R2019 | D0GAR00J0005 | 0 1/16W | 1 | |
| | R2020 | D0GAR00J0005 | 0 1/16W | 1 | |
| | R2022 | D0GAR00J0005 | 0 1/16W | 1 | |
| | R2023 | D0GBR00J0004 | 0 1/10W | 1 | |
| | R2024 | D0GA221JA023 | 220 1/16W | 1 | |
| | R2026 | D0GA102JA023 | 1K 1/16W | 1 | |
| | R2033 | D0GA221JA023 | 220 1/16W | 1 | |
| | R2034 | D0GBR00J0004 | 0 1/10W | 1 | |
| | R2035 | D0GA681JA023 | 680 1/16W | 1 | |
| | R2036 | D0GA105JA023 | 1M 1/16W | 1 | |
| | R2037 | D0GA104JA023 | 100K 1/16W | 1 | |
| | R2038 | D0GA106JA023 | 10M 1/16W | 1 | |
| | R2040 | J0JCC0000286 | INDUCTOR | 1 | |
| | R2041 | D0GAR00J0005 | 0 1/16W | 1 | |
| | R2042 | D0GB103JA065 | 10K 1/10W | 1 | |
| | R2049 | D0GAR00J0005 | 0 1/16W | 1 | |
| | R2055 | D0GAR00J0005 | 0 1/16W | 1 | |
| | R2068 | D0GAR00J0005 | 0 1/16W | 1 | |
| | R2070 | D0GAR00J0005 | 0 1/16W | 1 | |
| | R2071 | D0GAR00J0005 | 0 1/16W | 1 | |
| | R2074 | D0GA683JA023 | 68K 1/16W | 1 | |
| | R2075 | D0GA153JA023 | 15K 1/16W | 1 | |
| | R2095 | D0GBR00J0004 | 0 1/10W | 1 | |
| | R2096 | D0GBR00J0004 | 0 1/10W | 1 | |
| | R2097 | D0GBR00J0004 | 0 1/10W | 1 | |
| | R2104 | D0GBR00J0004 | 0 1/10W | 1 | |
| | R2106 | D0GB103JA065 | 10K 1/10W | 1 | |
| | R2108 | D0GB103JA065 | 10K 1/10W | 1 | |
| | R2110 | D0GB122JA065 | 1.2K 1/10W | 1 | |
| | R2111 | D0GB122JA065 | 1.2K 1/10W | 1 | |
| | R2112 | D0GA103JA023 | 10K 1/16W | 1 | |
| | R2115 | D0GB122JA065 | 1.2K 1/10W | 1 | |
| | R2117 | D0GB122JA065 | 1.2K 1/10W | 1 | |
| | R2118 | D0GA103JA023 | 10K 1/16W | 1 | |
| | R2121 | D0GB103JA065 | 10K 1/10W | 1 | |
| | R2122 | D0GA103JA023 | 10K 1/16W | 1 | |
| | R2127 | D0GA103JA023 | 10K 1/16W | 1 | PR,PS |
| | R2129 | D0GB272JA065 | 2.7K 1/10W | 1 | PR,PS |
| | R2129 | D0GBR00J0004 | 0 1/10W | 1 | PN |
| | R2131 | D0GA103JA023 | 10K 1/16W | 1 | |
| | R2135 | D0GB123JA065 | 12K 1/10W | 1 | PN |
| | R2135 | D0GB333JA065 | 33K 1/10W | 1 | PR,PS |
| | R2138 | D0GAR00J0005 | 0 1/16W | 1 | |
| | R2147 | D0GAR00J0005 | 0 1/16W | 1 | |
| | R2153 | D0GA683JA023 | 68K 1/16W | 1 | |
| | R2154 | D0GA683JA023 | 68K 1/16W | 1 | |
| | R2155 | D0GBR00J0004 | 0 1/10W | 1 | |

| Safety | Ref. No. | Part No. | Part Name & Description | Qty | Remarks |
|---|---|---|---|---|---|
| | R2156 | D0GB101JA065 | 100 1/10W | 1 | |
| | R2157 | D0GB122JA065 | 1.2K 1/10W | 1 | |
| | R2158 | D0GB102JA065 | 1K 1/10W | 1 | |
| | R2159 | D0GB682JA065 | 6.8K 1/10W | 1 | |
| | R2161 | D0GB473JA065 | 47K 1/10W | 1 | |
| | R2164 | D0GB104JA065 | 100K 1/10W | 1 | |
| | R2166 | D0GB153JA065 | 15K 1/10W | 1 | |
| | R2167 | D0GB4R7JA065 | 4.7 1/10W | 1 | |
| | R2168 | D0GB104JA065 | 100K 1/10W | 1 | |
| | R2169 | D0GB4R7JA065 | 4.7 1/10W | 1 | |
| | R2170 | D0GB102JA065 | 1K 1/10W | 1 | |
| | R2176 | D0GBR00J0004 | 0 1/10W | 1 | |
| | R2177 | D0GBR00J0004 | 0 1/10W | 1 | |
| | R2178 | D0GBR00J0004 | 0 1/10W | 1 | |
| | R2179 | D0GBR00J0004 | 0 1/10W | 1 | |
| | R2180 | D0GBR00J0004 | 0 1/10W | 1 | |
| | R2181 | D0GBR00J0004 | 0 1/10W | 1 | |
| | R2182 | D0GB103JA065 | 10K 1/10W | 1 | |
| | R2183 | D0GB103JA065 | 10K 1/10W | 1 | |
| | R2184 | D0GB103JA065 | 10K 1/10W | 1 | |
| | R2187 | D0GBR00J0004 | 0 1/10W | 1 | |
| | R2189 | D0GAR00J0005 | 0 1/16W | 1 | |
| | R2194 | D0GB470JA065 | 47 1/10W | 1 | |
| | R2195 | D0GB470JA065 | 47 1/10W | 1 | |
| | R2312 | D0GBR00J0004 | 0 1/10W | 1 | |
| | R2314 | D0GBR00J0004 | 0 1/10W | 1 | PN |
| | R2319 | D0GBR00J0004 | 0 1/10W | 1 | PR, PS |
| | R2419 | D0GB103JA065 | 10K 1/10W | 1 | |
| | R2420 | D0GB103JA065 | 10K 1/10W | 1 | |
| | R2421 | D0GB103JA065 | 10K 1/10W | 1 | |
| | R2422 | D0GB103JA065 | 10K 1/10W | 1 | |
| | R2498 | D0GB473JA065 | 47K 1/10W | 1 | |
| | R2499 | D0GA222JA023 | 2.2K 1/16W | 1 | |
| | R2557 | D0GAR00J0005 | 0 1/16W | 1 | |
| | R2580 | D0GB1R0JA065 | 1.0 1/10W | 1 | |
| | R6001 | D0GBR00J0004 | 0 1/10W | 1 | |
| | R6007 | D0GB100JA065 | 10 1/10W | 1 | |
| | R6011 | D0GB100JA065 | 10 1/10W | 1 | |
| | R6046 | D0GB223JA065 | 22K 1/10W | 1 | |
| | R6050 | D0GB100JA065 | 10 1/10W | 1 | |
| | R6054 | D0GB563JA065 | 56K 1/10W | 1 | |
| | R6055 | D0GB473JA065 | 47K 1/10W | 1 | |
| | R6056 | D0GB472JA065 | 4.7K 1/10W | 1 | |
| | R6057 | D0GB224JA065 | 220K 1/10W | 1 | |
| | R6058 | D0GB3R3JA065 | 3.3 1/10W | 1 | |
| | R6060 | D0GB3R3JA065 | 3.3 1/10W | 1 | |
| | R6061 | D0GB3R3JA065 | 3.3 1/10W | 1 | |
| | R6062 | D0GB3R3JA065 | 3.3 1/10W | 1 | |
| | R6066 | D0GB104JA065 | 100K 1/10W | 1 | |
| | R6067 | D0GB104JA065 | 100K 1/10W | 1 | |
| | R6068 | D0GB104JA065 | 100K 1/10W | 1 | |
| | R6069 | D0GB104JA065 | 100K 1/10W | 1 | |
| | R6070 | D0GB682JA065 | 6.8K 1/10W | 1 | |
| | R6072 | D0GB103JA065 | 10K 1/10W | 1 | |
| | R6090 | D0GBR00J0004 | 0 1/10W | 1 | |
| | R6104 | D0GB470JA065 | 47 1/10W | 1 | |
| | R6105 | D0GB470JA065 | 47 1/10W | 1 | |
| | R6106 | D0GB470JA065 | 47 1/10W | 1 | |
| | R6132 | D0GB224JA065 | 220K 1/10W | 1 | |
| | R6133 | D0GB472JA065 | 4.7K 1/10W | 1 | |
| | R6134 | D0GB472JA065 | 4.7K 1/10W | 1 | |
| | R6146 | D0GB103JA065 | 10K 1/10W | 1 | |
| | R6147 | D0GB103JA065 | 10K 1/10W | 1 | |
| | R6150 | D0GBR00J0004 | 0 1/10W | 1 | |
| | R6152 | D0GBR00J0004 | 0 1/10W | 1 | |
| | R6153 | D0GBR00J0004 | 0 1/10W | 1 | |
| | R6308 | D0GB562JA065 | 5.6K 1/10W | 1 | |
| | R6309 | D0GB562JA065 | 5.6K 1/10W | 1 | |
| | R6402 | D0GB474JA065 | 470K 1/10W | 1 | |
| | R6501 | D0GB152JA065 | 1.5K 1/10W | 1 | |
| | R6502 | D0GB105JA065 | 1M 1/10W | 1 | |
| | R6504 | D0GB103JA065 | 10K 1/10W | 1 | |
| | R6511 | D0GB101JA065 | 100 1/10W | 1 | |

| Safety | Ref. No. | Part No. | Part Name & Description | Qty | Remarks |
|---|---|---|---|---|---|
| | R6512 | D0GB101JA065 | 100 1/10W | 1 | |
| | R6513 | D0GB101JA065 | 100 1/10W | 1 | |
| | R6514 | D0GB101JA065 | 100 1/10W | 1 | |
| | R6520 | D0GB470JA065 | 47 1/10W | 1 | |
| | R6521 | D0GB470JA065 | 47 1/10W | 1 | |
| | R6550 | D0GB221JA065 | 220 1/10W | 1 | |
| | R6551 | D0GB221JA065 | 220 1/10W | 1 | |
| | R6559 | D0GB101JA065 | 100 1/10W | 1 | |
| | R6581 | D0GB103JA065 | 10K 1/10W | 1 | |
| | R6802 | D0GB223JA065 | 22K 1/10W | 1 | |
| | R6803 | D0GB100JA065 | 10 1/10W | 1 | |
| | R6804 | D0GB220JA065 | 22 1/10W | 1 | |
| | R6806 | D0GD473JA052 | 47K 1/8W | 1 | |
| | R6810 | D0GF390JA048 | 39 1/4W | 1 | |
| | R6811 | D0GF390JA048 | 39 1/4W | 1 | |
| | R6812 | D0GB101JA065 | 100 1/10W | 1 | |
| | R6813 | D0GB101JA065 | 100 1/10W | 1 | |
| | R6814 | D0GB101JA065 | 100 1/10W | 1 | |
| | R6815 | D0GB272JA065 | 2.7K 1/10W | 1 | |
| | R6816 | D0GB472JA065 | 4.7K 1/10W | 1 | |
| | R6817 | D0GB223JA065 | 22K 1/10W | 1 | |
| | R6818 | D0GB473JA065 | 47K 1/10W | 1 | |
| | R6822 | D0GD104JA052 | 100K 1/8W | 1 | |
| | R6823 | D0GB680JA065 | 68 1/10W | 1 | |
| | R7001 | D0GB222JA065 | 2.2K 1/10W | 1 | |
| | R9001 | D0GB222JA065 | 2.2K 1/10W | 1 | |
| | R9002 | D0GB392JA065 | 3.9K 1/10W | 1 | |
| | R9006 | D0GB272JA065 | 2.7K 1/10W | 1 | |
| | R9007 | D0GB392JA065 | 3.9K 1/10W | 1 | |
| | R9028 | D1BB7501A074 | 7.5K 1/10W | 1 | |
| | R9029 | D0GB183JA065 | 18K 1/10W | 1 | |
| | R9030 | D0GB183JA065 | 18K 1/10W | 1 | |
| | R9031 | D0GB123JA065 | 12K 1/10W | 1 | |
| | R9033 | D1BB7501A074 | 7.5K 1/10W | 1 | |
| | R9041 | D0GB223JA065 | 22K 1/10W | 1 | |
| | | | | | |
| | | | RESISTOR NETWORK | | |
| | | | | | |
| | RX2003 | D1H81034A042 | RESISTOR NETWORK | 1 | |
| | | | | | |
| | | | CAPACITORS | | |
| | | | | | |
| | C51 | F1G1H102A830 | 1000pF 50V | 1 | |
| | C61 | F1H1H104B047 | 0.1uF 50V | 1 | |
| | C62 | F1H1H104B047 | 0.1uF 50V | 1 | |
| | C66 | F1H1H330B052 | 33pF 50V | 1 | |
| | C67 | F1H1H3R0B050 | 3.0pF 50V | 1 | |
| | C1000 | F1J1A106A043 | 10uF 10V | 1 | |
| | C1001 | F1J1A106A043 | 10uF 10V | 1 | |
| | C1002 | F1K1E1060009 | 10uF 25V | 1 | |
| | C1003 | F1H1H561B052 | 560pF 50V | 1 | |
| | C1004 | F1H1H104B047 | 0.1uF 50V | 1 | |
| | C1005 | F1H1H104B047 | 0.1uF 50V | 1 | |
| | C1018 | F1H1H103B047 | 0.01uF 50V | 1 | |
| | C1020 | F1K1H475A234 | 4.7uF 50V | 1 | |
| | C1022 | F1H1H104B047 | 0.1uF 50V | 1 | |
| | C1023 | F1H1H104B047 | 0.1uF 50V | 1 | |
| | C1024 | F1H1A1050039 | 1uF 10V | 1 | |
| | C1025 | F1H1A1050039 | 1uF 10V | 1 | |
| | C1026 | F1H1H103B047 | 0.01uF 50V | 1 | |
| | C1031 | F1H1H104B047 | 0.1uF 50V | 1 | |
| | C1032 | F1J1A106A043 | 10uF 10V | 1 | |
| | C1033 | F1H1H103B047 | 0.01uF 50V | 1 | |
| | C1039 | F1J1A106A043 | 10uF 10V | 1 | |
| | C1040 | F1H1A1050039 | 1uF 10V | 1 | |
| | C1042 | F1H1H104B047 | 0.1uF 50V | 1 | |
| | C1044 | F1J1A106A043 | 10uF 10V | 1 | |
| | C1045 | F1J1A106A043 | 10uF 10V | 1 | |
| | C1047 | F1H1H104B047 | 0.1uF 50V | 1 | |
| | C1048 | F1H1H104B047 | 0.1uF 50V | 1 | |
| | C1049 | F1H1H104B047 | 0.1uF 50V | 1 | |
| | C1050 | F1H1H104B047 | 0.1uF 50V | 1 | |
| | C1052 | F2A1C221B456 | 220uF 16V | 1 | |

| Safety | Ref. No. | Part No. | Part Name & Description | Qty | Remarks |
|---|---|---|---|---|---|
| | C1055 | F1H1H104B047 | 0.1uF 50V | 1 | |
| | C1056 | F1J1A106A043 | 10uF 10V | 1 | |
| | C1058 | F1H1H104B047 | 0.1uF 50V | 1 | |
| | C1059 | F1H1H104B047 | 0.1uF 50V | 1 | |
| | C1060 | F2A1C221B456 | 220uF 16V | 1 | |
| | C1062 | F1J1C106A224 | 10uF 16V | 1 | |
| | C1064 | F1J1C106A224 | 10uF 16V | 1 | |
| | C1065 | F1J1A106A043 | 10uF 10V | 1 | |
| | C1069 | F1G1A1050004 | 1uF 10V | 1 | |
| | C2104 | F1G1C104A146 | 0.1uF 16V | 1 | |
| | C2105 | F1G1C104A146 | 0.1uF 16V | 1 | |
| | C2107 | F1G1C104A146 | 0.1uF 16V | 1 | |
| | C2108 | F1G1C104A146 | 0.1uF 16V | 1 | |
| | C2110 | F1G1C104A146 | 0.1uF 16V | 1 | |
| | C2111 | F1G1C104A146 | 0.1uF 16V | 1 | |
| | C2112 | F1G1C104A146 | 0.1uF 16V | 1 | |
| | C2113 | F1G1C104A146 | 0.1uF 16V | 1 | |
| | C2114 | F1H1C224A178 | 0.22uF 16V | 1 | |
| | C2115 | F1J1A335A005 | 3.3uF 10V | 1 | |
| | C2116 | F2A1C1010033 | 100uF 16V | 1 | |
| | C2117 | F1G1C104A146 | 0.1uF 16V | 1 | |
| | C2118 | F1G1H681A830 | 680pF 50V | 1 | |
| | C2119 | F2A0J331B035 | 330uF 6.3V | 1 | |
| | C2120 | F1G1C104A146 | 0.1uF 16V | 1 | |
| | C2121 | F1G1C104A146 | 0.1uF 16V | 1 | |
| | C2122 | F1H0J1060003 | 10uF 6.3V | 1 | |
| | C2123 | F1H0J1060003 | 10uF 6.3V | 1 | |
| | C2124 | F1H0J1060003 | 10uF 6.3V | 1 | |
| | C2125 | F1H0J1060003 | 10uF 6.3V | 1 | |
| | C2126 | F1H0J1060003 | 10uF 6.3V | 1 | |
| | C2127 | F1H0J1060003 | 10uF 6.3V | 1 | |
| | C2128 | F1H1H120B052 | 12pF 50V | 1 | |
| | C2129 | F1H1H120B052 | 12pF 50V | 1 | |
| | C2130 | F1G1H220A834 | 22pF 50V | 1 | |
| | C2131 | F1G1H270A834 | 27pF 50V | 1 | |
| | C2132 | F1G1H101A834 | 100pF 50V | 1 | |
| | C2133 | F1G1H102A830 | 1000pF 50V | 1 | |
| | C2134 | F1G1H102A830 | 1000pF 50V | 1 | |
| | C2135 | F1G1H102A830 | 1000pF 50V | 1 | |
| | C2136 | F1G1H101A834 | 100pF 50V | 1 | |
| | C2141 | F1G1C104A146 | 0.1uF 16V | 1 | |
| | C2142 | F1G1C104A146 | 0.1uF 16V | 1 | |
| | C2143 | F1H1C224A178 | 0.22uF 16V | 1 | |
| | C2144 | F1H1H223B047 | 0.022uF 50V | 1 | |
| | C2145 | F1H1H470B052 | 47pF 50V | 1 | |
| | C2146 | F1H1H470B052 | 47pF 50V | 1 | |
| | C2147 | F1G1C104A146 | 0.1uF 16V | 1 | |
| | C2149 | F1G1H102A830 | 1000pF 50V | 1 | |
| | C2162 | F1J1A106A043 | 10uF 10V | 1 | |
| | C2163 | F1H1H103B047 | 0.01uF 50V | 1 | |
| | C2164 | F1J1A106A043 | 10uF 10V | 1 | |
| | C2165 | F1G1C104A146 | 0.1uF 16V | 1 | |
| | C2166 | F1H1H103B047 | 0.01uF 50V | 1 | |
| | C2167 | F1H1H103B047 | 0.01uF 50V | 1 | |
| | C2168 | F1G1H222A830 | 2200pF 50V | 1 | |
| | C2169 | F1G1H222A830 | 2200pF 50V | 1 | |
| | C2170 | F1J1A106A043 | 10uF 10V | 1 | |
| | C2171 | F1H1H103B047 | 0.01uF 50V | 1 | |
| | C2172 | F1G1C104A146 | 0.1uF 16V | 1 | |
| | C2173 | F1G1H102A830 | 1000pF 50V | 1 | |
| | C2178 | F1H1E105A153 | 1uF 25V | 1 | |
| | C2179 | F1H1H103B047 | 0.01uF 50V | 1 | |
| | C2180 | F2A1C1010033 | 100uF 16V | 1 | |
| | C2181 | F2A1C1010033 | 100uF 16V | 1 | |
| | C2182 | F2A1C1010033 | 100uF 16V | 1 | |
| | C2183 | F1G1H680A834 | 68pF 50V | 1 | |
| | C2185 | F2A0J101A208 | 100uF 6.3V | 1 | |
| | C2506 | F1G1C104A146 | 0.1uF 16V | 1 | |
| | C2507 | F1J1A4750011 | 4.7uF 10V | 1 | |
| | C6005 | F1J1C1060006 | 10uF 16V | 1 | |
| | C6006 | F0A1H105A095 | 1uF 50V | 1 | |
| | C6007 | F0A1H105A095 | 1uF 50V | 1 | |
| | C6008 | F0A1H105A095 | 1uF 50V | 1 | |

| Safety | Ref. No. | Part No. | Part Name & Description | Qty | Remarks |
|---|---|---|---|---|---|
| | C6009 | F0A1H105A095 | 1uF 50V | 1 | |
| | C6018 | F1H1H104B047 | 0.1uF 50V | 1 | |
| | C6019 | F1H1H104B047 | 0.1uF 50V | 1 | |
| | C6020 | F1H1E105A153 | 1uF 25V | 1 | |
| | C6021 | F1H1H104B047 | 0.1uF 50V | 1 | |
| | C6022 | F1H1E105A153 | 1uF 25V | 1 | |
| | C6023 | F1H1E105A153 | 1uF 25V | 1 | |
| | C6024 | F1H1H333A954 | 0.033uF 50V | 1 | |
| | C6025 | F1H1H333A954 | 0.033uF 50V | 1 | |
| | C6027 | F1H1H104B047 | 0.1uF 50V | 1 | |
| | C6028 | F1H1H333A954 | 0.033uF 50V | 1 | |
| | C6030 | F1H1H333A954 | 0.033uF 50V | 1 | |
| | C6031 | F1J1H105A918 | 1uF 50V | 1 | |
| | C6032 | F1H1H104A903 | 0.1uF 50V | 1 | |
| | C6035 | F2A1H102A201 | 1000uF 50V | 1 | |
| | C6036 | F1H1H104A903 | 0.1uF 50V | 1 | |
| | C6039 | F1J1H105A918 | 1uF 50V | 1 | |
| | C6061 | F1H1H103B047 | 0.01uF 50V | 1 | |
| | C6062 | F1H1H103B047 | 0.01uF 50V | 1 | |
| | C6063 | F1H1H103B047 | 0.01uF 50V | 1 | |
| | C6064 | F1H1H103B047 | 0.01uF 50V | 1 | |
| | C6068 | F1J1A106A043 | 10uF 10V | 1 | |
| | C6099 | F1H1H681B052 | 680pF 50V | 1 | |
| | C6100 | F1H1H681B052 | 680pF 50V | 1 | |
| | C6108 | F1H1A105A113 | 1uF 10V | 1 | |
| | C6109 | F1H1A105A113 | 1uF 10V | 1 | |
| | C6111 | F1G1H101A834 | 100pF 50V | 1 | |
| | C6112 | F1G1H101A834 | 100pF 50V | 1 | |
| | C6404 | F1H1H104B047 | 0.1uF 50V | 1 | |
| | C6500 | F2A0J470A013 | 47uF 6.3V | 1 | |
| | C6521 | F1H1C474A178 | 0.47uF 16V | 1 | |
| | C6523 | F1H1H103B047 | 0.01uF 50V | 1 | |
| | C6524 | F1H0J1060003 | 10uF 6.3V | 1 | |
| | C6525 | F1H1H103B047 | 0.01uF 50V | 1 | |
| | C6526 | F1H0J1060003 | 10uF 6.3V | 1 | |
| | C6527 | F1H0J1050012 | 1uF 6.3V | 1 | |
| | C6528 | F1H0J1060003 | 10uF 6.3V | 1 | |
| | C6529 | F1H0J1050012 | 1uF 6.3V | 1 | |
| | C6550 | F1G1H102A830 | 1000pF 50V | 1 | |
| | C6551 | F1G1H102A830 | 1000pF 50V | 1 | |
| | C6552 | F1G1H470A834 | 47pF 50V | 1 | |
| | C6553 | F1G1H470A834 | 47pF 50V | 1 | |
| | C6560 | F1H1H120B052 | 12pF 50V | 1 | |
| | C6561 | F1H1H120B052 | 12pF 50V | 1 | |
| | C6591 | F1H0J1050012 | 1uF 6.3V | 1 | |
| | C6592 | F1H1H104B047 | 0.1uF 50V | 1 | |
| | C6801 | F1H1A105A113 | 1uF 10V | 1 | |
| | C6802 | F1J1H105A918 | 1uF 50V | 1 | |
| | C6803 | F1H1E105A153 | 1uF 25V | 1 | |
| | C6804 | F1H1E105A153 | 1uF 25V | 1 | |
| | C6805 | F1J1E105A287 | 1uF 25V | 1 | |
| | C6806 | F2A1H470B412 | 47uF 50V | 1 | |
| | C6807 | F1H1E105A153 | 1uF 25V | 1 | |
| | C6808 | F1H1E105A153 | 1uF 25V | 1 | |
| | C6816 | F1H1H104B047 | 0.1uF 50V | 1 | |
| | C6817 | F2A0J101A208 | 100uF 6.3V | 1 | |
| | C6820 | F1H1A105A113 | 1uF 10V | 1 | |
| | C6821 | F2A0J101A208 | 100uF 6.3V | 1 | |
| | C6824 | F1H1H101B052 | 100pF 50V | 1 | |
| | C6825 | F1H1H101B052 | 100pF 50V | 1 | |
| | C6830 | F1H1H101B052 | 100pF 50V | 1 | |
| | C6831 | F1H1H102B047 | 1000pF 50V | 1 | |
| | C6832 | F1J1A106A043 | 10uF 10V | 1 | |
| | C7000 | F1H1H104B047 | 0.1uF 50V | 1 | |
| | C7001 | F1H1A105A113 | 1uF 10V | 1 | |
| | C7002 | F1H1A105A113 | 1uF 10V | 1 | |
| | C7003 | F1H1H104B047 | 0.1uF 50V | 1 | |

MMH1608