PSG1408001CE

Service Manual

Active Speaker System

Model No. SC-CMAX5GS
SC-CMAX5PH
SC-CMAX5PR

Product Color: (K)...Black Type

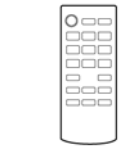

Remote Control

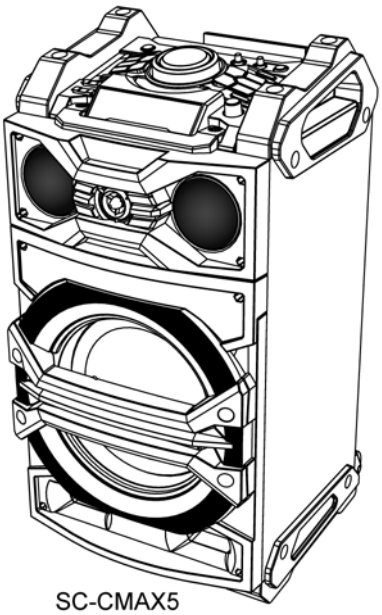

SC-CMAX5

⚠ WARNING

This service information is designed for experienced repair technicians only and is not designed for use by the general public. It does not contain warnings or cautions to advise non-technical individuals of potential dangers in attempting to service a product. Products powered by electricity should be serviced or repaired only by experienced professional technicians. Any attempt to service or repair the product or products dealt with in this service information by anyone else could result in serious injury or death.

IMPORTANT SAFETY NOTICE

There are special components used in this equipment which are important for safety. These parts are marked by ⚠ in the Schematic Diagrams, Circuit Board Diagrams, Exploded Views and Replacement Parts List. It is essential that these critical parts should be replaced with manufacturer's specified parts to prevent shock, fire or other hazards. Do not modify the original design without permission of manufacturer.

TABLE OF CONTENTS

PAGE

1 Safety Precautions ---------- **3**
1.1. General Guidelines ---------- 3
1.2. Caution for AC Cord (For GS only) ---------- 4
1.3. Before Use (For PH only) ---------- 4
1.4. Before Repair and Adjustment ---------- 4
1.5. Protection Circuitry ---------- 5
1.6. Safety Part Information ---------- 5
2 Warning ---------- **6**
2.1. Prevention of Electrostatic Discharge (ESD) to Electrostatically Sensitive (ES) Devices ---------- 6
2.2. Service caution based on Legal restrictions ---------- 7
3 Service Navigation ---------- **8**

Panasonic

© Panasonic Corporation 2014. All rights reserved. Unauthorized copying and distribution is a violation of law.

3.1. Service Information ---------- 8
4 Specifications ---------- 9
5 Location of Controls and Components ---------- 10
5.1. Main Unit & Remote Control Key Button Operations (For PH/PR) ---------- 10
5.2. Main Unit & Remote Control Key Button Operations (For GS) ---------- 11
6 Service Mode ---------- 12
6.1. Self Diagnostic Mode ---------- 12
6.2. Self Diagnostic Function Error Code ---------- 13
6.3. Doctor Mode ---------- 14
7 Troubleshooting Guide ---------- 17
8 Disassembly and Assembly Instructions ---------- 21
8.1. Disassembly flow chart ---------- 22
8.2. Type of screws ---------- 23
8.3. Main Parts Location Diagram ---------- 23
8.4. Disassembly of Handle Bar Unit ---------- 24
8.5. Disassembly of Rear Panel ---------- 24
8.6. Disassembly of Amp Unit Block ---------- 26
8.7. Disassembly of Main P.C.B. Assembly ---------- 27
8.8. Disassembly of SMPS Module & Voltage Selector P.C.B. ---------- 27
8.9. Disassembly of Top Panel Unit ---------- 28
8.10. Disassembly of Bluetooth P.C.B. Assembly ---------- 28
8.11. Disassembly of Panel P.C.B. ---------- 29
8.12. Disassembly of FL Display P.C.B. ---------- 30
8.13. Disassembly of Top Front Panel Block ---------- 31
8.14. Disassembly of Tweeter Speaker (6cm) ---------- 32
8.15. Disassembly of Woofer Speaker (10cm) ---------- 32
8.16. Disassembly of Center Front Panel ---------- 33
8.17. Disassembly of Subwoofer Front Panel Block ---------- 34
8.18. Disassembly of Woofer Speaker (25cm) ---------- 36
8.19. Disassembly of Lighting Wire P.C.B. Assembly ---------- 36
9 Service Position ---------- 37
9.1. Checking of SMPS Module, Voltage Selector P.C.B. & Main P.C.B. Assembly ---------- 37
9.2. Checking of Bluetooth P.C.B. Assembly, Panel P.C.B. & FL Display P.C.B. ---------- 38
10 Block Diagram ---------- 41
10.1. SYSTEM CONTROL (1/3) BLOCK DIAGRAM ---------- 41
10.2. SYSTEM CONTROL (2/3) BLOCK DIAGRAM ---------- 42
10.3. SYSTEM CONTROL (3/3) BLOCK DIAGRAM ---------- 43
10.4. AUDIO (1/3) BLOCK DIAGRAM ---------- 44
10.5. AUDIO (2/3) BLOCK DIAGRAM ---------- 45
10.6. AUDIO (3/3) BLOCK DIAGRAM ---------- 46
10.7. POWER SUPPLY (1/2) BLOCK DIAGRAM ---------- 47
10.8. POWER SUPPLY (2/2) BLOCK DIAGRAM ---------- 48
11 Wiring Connection Diagram ---------- 49
12 Schematic Diagram ---------- 51
12.1. Schematic Diagram Notes ---------- 51
12.2. MAIN (SOC) CIRCUIT ---------- 53
12.3. MAIN (USB) CIRCUIT ---------- 54
12.4. MAIN (DSP) CIRCUIT (1/2) ---------- 55
12.5. MAIN (DSP) CIRCUIT (2/2) ---------- 56
12.6. MAIN (DAMP) CIRCUIT ---------- 57
12.7. MAIN (VREG FAN) CIRCUIT (1/2) ---------- 58
12.8. MAIN (VREG FAN) CIRCUIT (2/2) ---------- 59
12.9. MAIN (CONNECTOR) CIRCUIT ---------- 60
12.10. PANEL CIRCUIT (1/3) ---------- 61
12.11. PANEL CIRCUIT (2/3) ---------- 62
12.12. PANEL CIRCUIT (3/3) ---------- 63
12.13. FL DISPLAY CIRCUIT ---------- 64
13 Printed Circuit Board ---------- 65
13.1. MAIN P.C.B. ASS'Y (Side A) ---------- 65
13.2. MAIN P.C.B. ASS'Y (Side B) ---------- 66
13.3. PANEL P.C.B. ---------- 67
13.4. FL DISPLAY P.C.B. ---------- 68
14 Voltage and Waveform Measurement ---------- 69
14.1. Voltage Measurement ---------- 69
15 Exploded View and Replacement Parts List ---------- 75
15.1. Cabinet Parts Location (1/4) ---------- 75
15.2. Cabinet Parts Location (2/4) ---------- 76
15.3. Cabinet Parts Location (3/4) ---------- 77
15.4. Cabinet Parts Location (4/4) ---------- 78
15.5. Packaging ---------- 79
15.6. Mechanical Replacement Parts List ---------- 81
15.7. Electrical Replacement Parts List ---------- 83

1 Safety Precautions

1.1. General Guidelines

1. **IMPORTANT SAFETY NOTICE**

   There are special components used in this equipment which are important for safety. These parts are marked by ⚠ in the Schematic Diagrams, Circuit Board Layout, Exploded Views and Replacement Parts List. It is essential that these critical parts should be replaced with manufacturer's specified parts to prevent X-RADIATION, shock, fire, or other hazards. Do not modify the original design without permission of manufacturer.
2. An Isolation Transformer should always be used during the servicing of AC Adaptor whose chassis is not isolated from the AC power line. Use a transformer of adequate power rating as this protects the technician from accidents resulting in personal injury from electrical shocks. It will also protect AC Adaptor from being damaged by accidental shorting that may occur during servicing.
3. When servicing, observe the original lead dress. If a short circuit is found, replace all parts which have been overheated or damaged by the short circuit.
4. After servicing, see to it that all the protective devices such as insulation barriers, insulation papers shields are properly installed.
5. After servicing, make the following leakage current checks to prevent the customer from being exposed to shock hazards.

1.1.1. Leakage Current Cold Check

1. Unplug the AC cord and connect a jumper between the two prongs on the plug.
2. measure the resistance value, with an ohmmeter between the jumpered AC plug and each exposed metallic cabinet part on the equipment such as screwheads, connectors, control shafts, etc. When the exposed metallic part has a return path to the chassis, the reading should be between 1MΩ and 5.2MΩ. When the exposed metal does not have a return path to the chassis, the reading must be ∞

1.1.2. Leakage Current Hot Check

1. Plug the AC cord directly into the AC outlet. Do not use an isolation transformer for this check.
2. Connect a 1.5kΩ, 10 watts resistor, in parallel with a 0.15μF capacitors, between each exposed metallic part on the set and a good earth ground such as a water pipe, as shown in Figure 1-1.
3. Use an AC voltmeter, with 1000 ohms/volt or more sensitivity, to measure the potential across the resistor.
4. Check each exposed metallic part, and measure the voltage at each point.
5. Reverse the AC plug in the AC outlet and repeat each of the above measurements.
6. The potential at any point should not exceed 0.75 volts RMS. A leakage current tester (Simpson Model 229 or equivalent) may be used to make the hot checks, leakage current must not exceed 1/2 milliamp. In case a measurement is outside of the limits specified, there is a possibility of a shock hazard, and the equipment should be repaired and rechecked before it is returned to the customer.

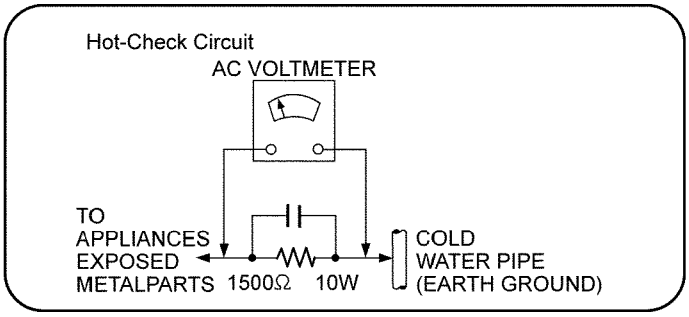

Figure 1-1

1.2. Caution for AC Cord (For GS only)

(For the AC mains plug of three pins)

For your safety, please read the following text carefully.
This appliance is supplied with a moulded three pin mains plug for your safety and convenience.
A 5-ampere fuse is fitted in this plug.
Should the fuse need to be replaced please ensure that the replacement fuse has a rating of 5-ampere and that it is approved by ASTA or BSI to BS1362.
Check for the ASTA mark or the BSI mark on the body of the fuse.

If the plug contains a removable fuse cover you must ensure that it is refitted when the fuse is replaced.
If you lose the fuse cover the plug must not be used until a replacement cover is obtained.
A replacement fuse cover can be purchased from your local dealer.

Before use

Remove the connector cover.

How to replace the fuse

The location of the fuse differ according to the type of AC mains plug (figures A and B). Confirm the AC mains plug fitted and follow the instructions below.
Illustrations may differ from actual AC mains plug.

1. Open the fuse cover with a screwdriver.

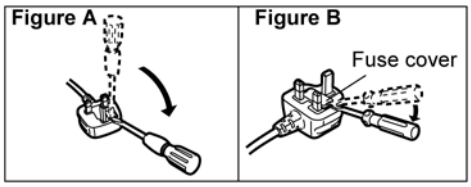

2. Replace the fuse and close or attach the fuse cover.

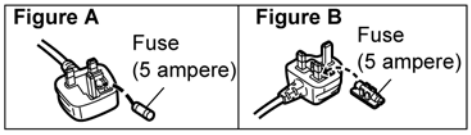

Figure 1-2

1.3. Before Use (For PH only)

Be sure to disconnect the AC cord before adjusting the voltage selector.
Use a minus(-) screwdriver to set the voltage selector (on the bottom panel) to the voltage setting for the area in which the unit will be used.
Note : that this unit will be seriously damaged if this setting is not made correctly. (There is no voltage selector for some countries, the correct voltage is already set.)

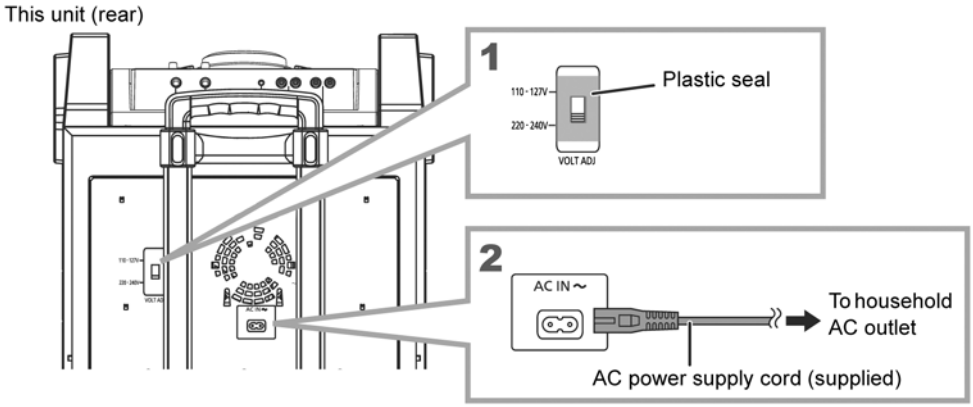

1 Set the voltage.

CONFIRM THE AC VOLTAGE AND SET THE VOLTAGE SELECTOR TO THE CORRECT POSITION. TO CHANGE THE POSITION, REMOVE THE PLASTIC SEAL.

Use a flat-head screwdriver to set the voltage selector to the AC voltage in your area.

2 Connect the AC power supply cord.

Conserving power

The system consumes a small amount of power even when it is in standby mode.
Disconnect the power supply if you do not use the system.
Some settings will be lost after you disconnect the system. You have to set them again.

Figure 1-3

1.4. Before Repair and Adjustment

Caution :

DO NOT SHORT-CIRCUIT DIRECTLY (with a screwdriver blade, for instance), as this may destroy solid state devices.
After repairs are completed, restore power gradually using a variac, to avoid overcurrent.

- Current consumption at AC 220V - 240V, at 50/60Hz during power on, (In Standby mode) should be ~550 mA. (For PR/GS)
- Current consumption at AC 110V - 127V / 220V - 240V, at 50/60Hz during power on, (In Standby mode) should be ~550 mA. (For PH)

1.5. Protection Circuitry

The protection circuitry may have operated if either of the following conditions are noticed:

- No sound is heard when the power is turned on.
- Sound stops during a performance.

The function of this circuitry is to prevent circuitry damage if, for example, the positive and negative speaker connection wires are "shorted", or if speaker systems with an impedance less than the indicated rated impedance of the amplifier are used.

If this occurs, follow the procedure outlines below:

1. Turn off the power.
2. Determine the cause of the problem and correct it.
3. Turn on the power once again after one minute.

Note:

When the protection circuitry functions, the unit will not operate unless the power is first turned off and then on again.

1.6. Safety Part Information

Safety Parts List:

There are special components used in this equipment which are important for safety.

These parts are marked by ⚠ in the Schematic Diagrams, Exploded View & Replacement Parts List. It is essential that these critical parts should be replaced with manufacturer's specified parts to prevent shock, fire or other hazards. Do not modify the original design without permission of manufacturer.

Safety	Ref. No.	Part No.	Part Name & Description	Remarks
⚠	10	RGR0468A-A	REAR PANEL	PH
⚠	10	RGR0468B-A	REAR PANEL	PR
⚠	10	RGR0468B-B	REAR PANEL	GS
⚠	A2	K2CA2YY00039	AC CORD	PR
⚠	A2	K2CJ2YY00101	AC CORD	GS
⚠	A2	K2CP2YY00061	AC CORD	GS
⚠	A2	K2CQ2YY00119	AC CORD	GS,PH
⚠	A2	K2CT2YY00097	AC CORD	GS
⚠	A3	RQT9960-M	O/I BOOK (En/Sp)	PH,PR
⚠	A3	RQT9961-G	O/I BOOK (En/Cn)	GS
⚠	A4	K2DAYYY00002	AC PLUG ADAPTOR	PH
⚠	PCB5	N0AC2GP00001	SMPS MODULE	GS,PR
⚠	PCB5	N0AD2GP00002	SMPS MODULE	PH

2 Warning

2.1. Prevention of Electrostatic Discharge (ESD) to Electrostatically Sensitive (ES) Devices

Some semiconductor (solid state) devices can be damaged easily by static electricity. Such components commonly are called Electrostatically Sensitive (ES) Devices.

Examples of typical ES devices are IC (integrated circuits) and some field-effect transistors and semiconductor "chip" components.

The following techniques should be used to help reduce the incidence of component damage caused by electrostatic discharge (ESD).

1. Immediately before handling any semiconductor component or semiconductor-equipped assembly, drain off any ESD on your body by touching a known earth ground. Alternatively, obtain and wear a commercially available discharging ESD wrist strap, which should be removed for potential shock reasons prior to applying power to the unit under test.
2. After removing an electrical assembly equipped with ES devices, place the assembly on a conductive surface such as aluminum foil, to prevent electrostatic charge buildup or exposure of the assembly.
3. Use only a grounded-tip soldering iron to solder or unsolder ES devices.
4. Use only an anti-static solder removal device. Some solder removal devices not classified as “anti-static (ESD protected)” can generate electrical charge sufficient to damage ES devices.
5. Do not use freon-propelled chemicals. These can generate electrical charges sufficient to damage ES devices.
6. Do not remove a replacement ES device from its protective package until immediately before you are ready to install it. (Most replacement ES devices are packaged with leads electrically shorted together by conductive foam, aluminum foil or comparable conductive material).
7. Immediately before removing the protective material from the leads of a replacement ES device, touch the protective material to the chassis or circuit assembly into which the device will be installed.
   CAUTION:
   Be sure no power is applied to the chassis or circuit, and observe all other safety precautions.
8. Minimize bodily motions when handling unpackaged replacement ES devices. (Otherwise harmless motion such as the brushing together of your clothes fabric or the lifting of your foot from a carpeted floor can generate static electricity (ESD) sufficient to damage an ES device).

IMPORTANT SAFETY NOTICE

There are special components used in this equipment which are important for safety. These parts are marked by ⚠ in the Schematic Diagrams, Circuit Board Diagrams, Exploded Views and Replacement Parts List. It is essential that these critical parts should be replaced with manufacturer's specified parts to prevent shock, fire or other hazards. Do not modify the original design without permission of manufacturer.

2.2. Service caution based on Legal restrictions

2.2.1. General description about Lead Free Solder (PbF)

The lead free solder has been used in the mounting process of all electrical components on the printed circuit boards used for this equipment in considering the globally environmental conservation.

The normal solder is the alloy of tin (Sn) and lead (Pb). On the other hand, the lead free solder is the alloy mainly consists of tin (Sn), silver (Ag) and Copper (Cu), and the melting point of the lead free solder is higher approx.30 degrees C (86°F) more than that of the normal solder.

Definition of PCB Lead Free Solder being used

The letter of “PbF” is printed either foil side or components side on the PCB using the lead free solder. (See right figure)	PbF

Service caution for repair work using Lead Free Solder (PbF)

- The lead free solder has to be used when repairing the equipment for which the lead free solder is used.
  (Definition: The letter of “PbF” is printed on the PCB using the lead free solder.)
- To put lead free solder, it should be well molten and mixed with the original lead free solder.
- Remove the remaining lead free solder on the PCB cleanly for soldering of the new IC.
- Since the melting point of the lead free solder is higher than that of the normal lead solder, it takes the longer time to melt the lead free solder.
- Use the soldering iron (more than 70W) equipped with the temperature control after setting the temperature at 350±30 degrees C (662±86°F).

Recommended Lead Free Solder (Service Parts Route.)

- The following 3 types of lead free solder are available through the service parts route.
  RFKZ03D01K----------(0.3mm 100g Reel)
  RFKZ06D01K----------(0.6mm 100g Reel)
  RFKZ10D01K----------(1.0mm 100g Reel)

Note

* Ingredient: Tin (Sn), 96.5%, Silver (Ag) 3.0%, Copper (Cu) 0.5%, Cobalt (Co) / Germanium (Ge) 0.1 to 0.3%

3 Service Navigation

3.1. Service Information

This service manual contains technical information which will allow service personnel's to understand and service this model.
Please place orders using the parts list and not the drawing reference numbers.

If the circuit is changed or modified, this information will be followed by supplement service manual to be filed with original service manual.

3.1.1. Firmware update

- Software Update through USB
  Steps:
  1. Power On the unit.
  2. Go to USB selector.
  3. Plug In USB (containing FW_IMAGE.BIN & FWUPDATE (disc image file)).
  4. Display will show 'READING' (blink) → UPD 0% to 100%.
  5. After Software Update complete, display will be as show [SUCCESS].
  6. Plug out USB.
  7. Power off unit (unplug AC cord).
  8. Software Update Process Finish.

3.1.2. Special

- For first lot of this model, there is additional Mute circuit (refer to Fig.2-1) to the Main P.C.B. Assembly.
- This circuit is for improvement to the quality.
- This Service Manual will be described with the Mute circuit implemented in the Main P.C.B. Assembly.

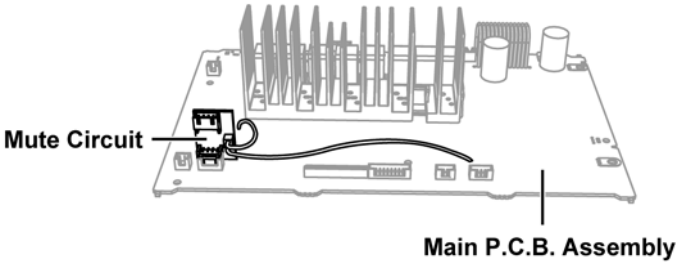

Fig.2-1

4 Specifications

■ **General**

Power consumption	92 W
Power consumption in standby mode	Approx. 0.4 W
(with “BLUETOOTH STANDBY” is “ON”)	Approx. 0.6 W
Power supply	
(For PH)	AC 110 V to 127 V/220 V to 240 V, 50/60 Hz
(For GS/PR)	AC 220 V to 240 V, 50/60 Hz
Dimensions (W x H x D)	378 mm x 724 mm x 436 mm
Mass	Approx. 19.8 kg
Operating temperature range	0 °C to +40 °C
Operating humidity range	35% to 80 % RH (no condensation)

■ **Amplifier Section**

Output power	
RMS Output Power Mono mode	
Front High ch	300 W per channel (3 Ω), 10 kHz, 30 % THD
Front Mid ch	300 W per channel (3 Ω), 1 kHz, 30 % THD
Subwoofer Ch	400 W per channel (2 Ω), 100 Hz, 30 % THD
Total RMS Mono mode power	1000 W (30 % THD)

■ **Terminal Section**

USB Port	
USB Standard	USB 2.0 full speed
Media file format support	MP3 (*.mp3)
USB device file system	FAT12, FAT16, FAT32
USB port power	500 mA (max)
USB Recording	
Bit rate	128 kbps
USB recording speed	1x
Recording file format	MP3 (*.mp3)
Microphone jack/Guitar jack (2 systems)	
Mic 1	Mono, 6.3 mm jack
Mic 2/Guitar	Mono, 6.3 mm jack
Audio Input	
AUX IN 1	Stereo, Pin jack (1 system)
AUX IN 2	Stereo, 3.5 mm jack
Audio Output (Line Out)	
AUDIO OUT	Stereo, Pin jack (1 system)

■ **Bluetooth Section**

Version	Bluetooth® Ver.2.1+EDR
Class	Class 2
Supported profiles	A2DP, AVRCP, SPP
Operating frequency	2.4 GHz band FH-SS
Operation distance	10 m Line of Sight

■ **Speaker Section**

Front High	
Speaker unit(s)	
Tweeter	6 cm Cone type
Front Mid	
Speaker unit(s)	
Woofer	10 cm Cone type x 2
Subwoofer	
Speaker unit(s)	
Superwoofer	25 cm Cone type

Note:

- Specifications are subject to change without notice.
- Mass and dimensions are approximate.
- Total harmonic distortion is measured by the digital spectrum analyzer.

*Trolley handle at fully pushed-down position

5 Location of Controls and Components

5.1. Main Unit & Remote Control Key Button Operations (For PH/PR)

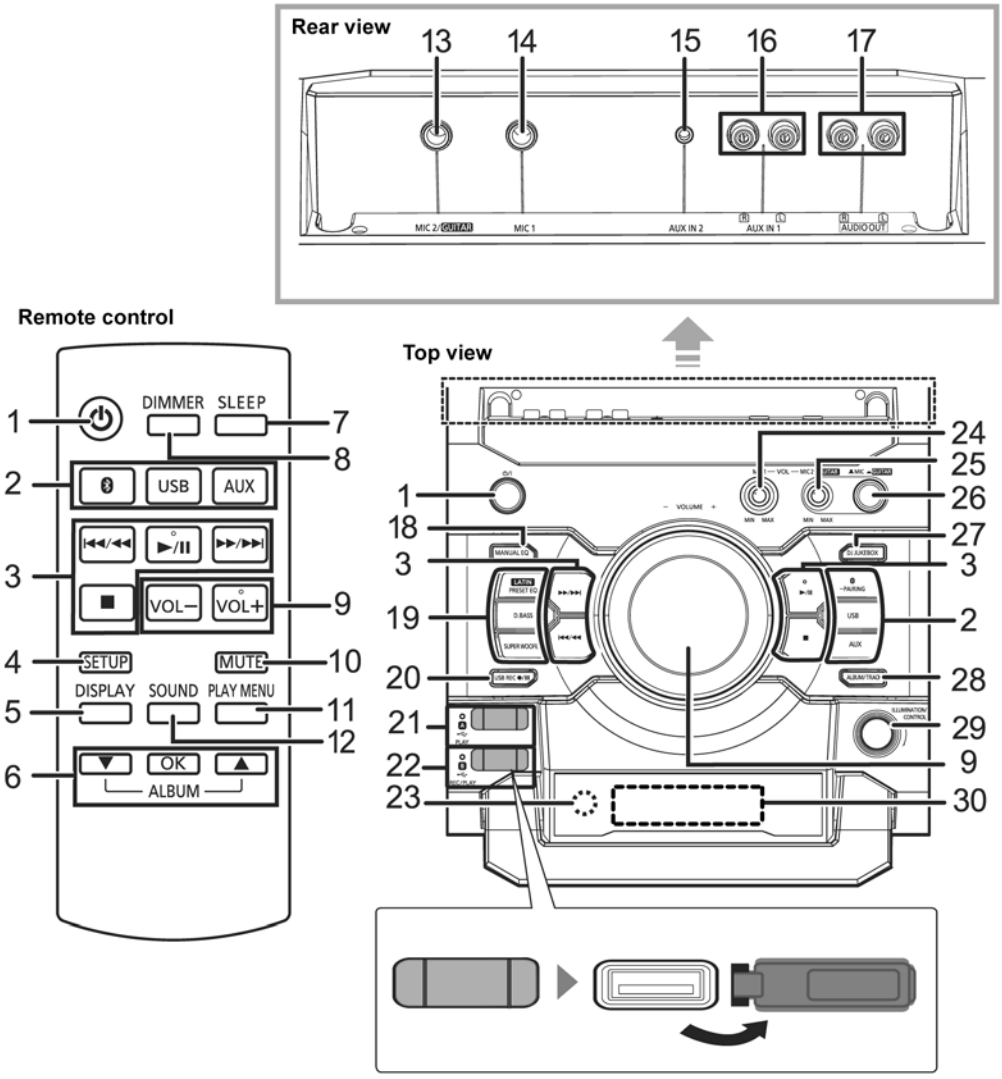

1 **Standby/on switch** [⏻], [⏻/I]
Press to switch the unit from on to standby mode or vice versa. In standby mode, the unit is still consuming a small amount of power.
2 Select audio source
On the unit:
To start Bluetooth® pairing, press and hold [-PAIRING] when you are in Bluetooth® source.
3 Basic playback control buttons
4 Enter setup menu
5 Change the displayed information
6 Selection/OK
7 Set the sleep timer
8 Dim the display panel and turn off the illumination
Press again to cancel.
9 Adjust the volume (0 (min.) to 50 (max.))
10 Mute the sound
Press again to cancel. "MUTE" is also canceled when the volume is adjusted or the unit is turned off.
11 Set the play menu item
12 Enter sound menu
13 Microphone jack 2/Guitar input jack
14 Microphone jack 1
15 AUX IN 2 terminal
16 AUX IN 1 terminal
17 AUDIO OUT terminal
18 Select MANUAL EQ
19 Select the sound effects
20 Recording operation control
21 USB A
USB port for playback
USB status indicator
22 USB B
USB port for recording/playback
USB status indicator
23 Remote control signal sensor
Distance: Within approx. 7 m directly in front
Angle: Approximately 20° up and down, 30° left and right
24 Adjust the volume of microphone 1
25 Adjust the volume of microphone 2 or guitar
26 Microphone 2 or guitar switch
27 Select the DJ jukebox
28 Select MP3 album or track browsing mode
29 Change the illumination setting
Browse MP3 tracks or albums
Change DJ jukebox playback mode
30 Display panel

5.2. Main Unit & Remote Control Key Button Operations (For GS)

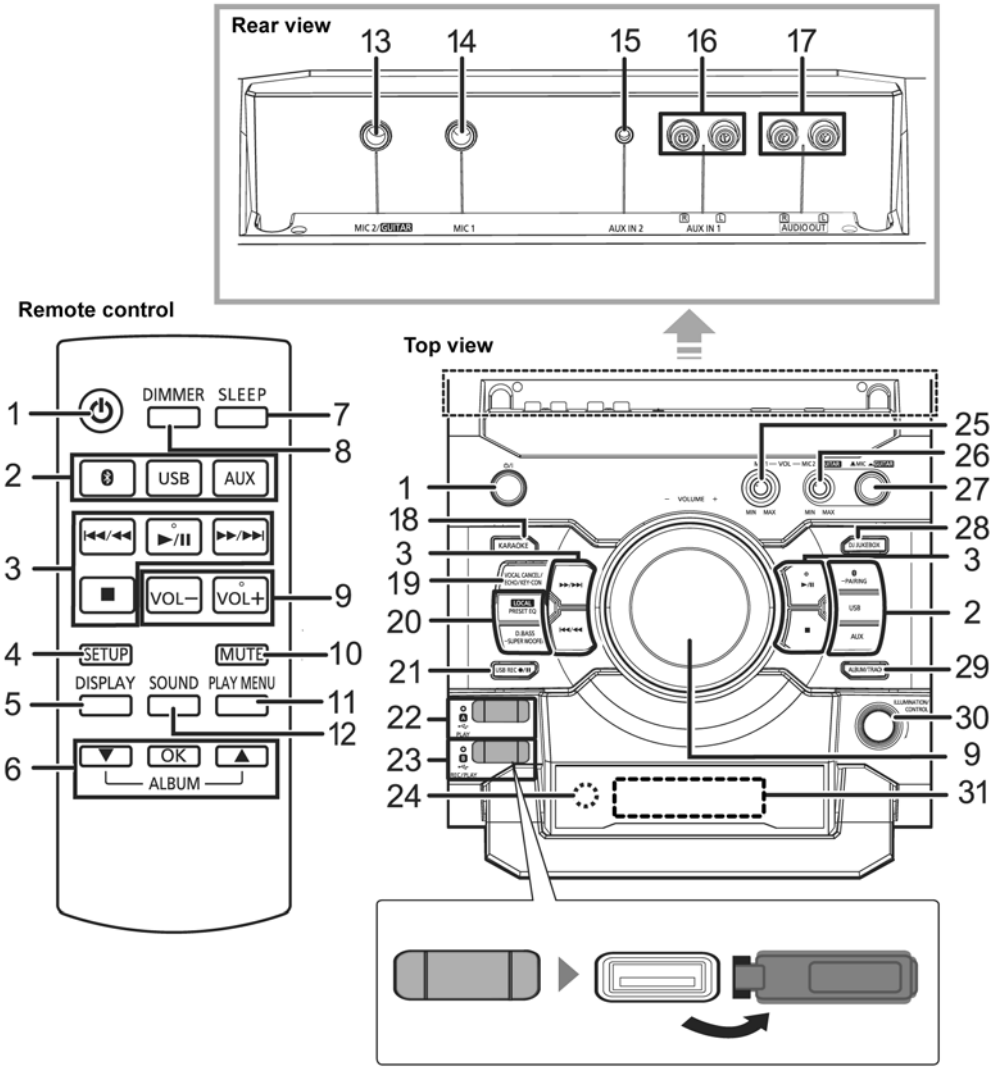

1 **Standby/on switch** [⏻], [⏻/I]
Press to switch the unit from on to standby mode or vice versa. In standby mode, the unit is still consuming a small amount of power.
2 Select audio source
On the unit:
To start Bluetooth® pairing, press and hold [-PAIRING] when you are in Bluetooth® source.
3 Basic playback control buttons
4 Enter setup menu
5 Change the displayed information
6 Selection/OK
7 Set the sleep timer
8 Dim the display panel and turn off the illumination
Press again to cancel.
9 Adjust the volume (0 (min.) to 50 (max.))
10 Mute the sound
Press again to cancel. "MUTE" is also cancelled when the volume is adjusted or the unit is turned off.
11 Set the play menu item
12 Enter sound menu
13 Microphone jack 2/Guitar input jack
14 Microphone jack 1
15 AUX IN 2 terminal
16 AUX IN 1 terminal
17 AUDIO OUT terminal
18 Enter KARAOKE mode
19 Select vocal cancel, echo or key control
20 Select the sound effects
21 Recording operation control
22 USB A
USB port for playback
USB status indicator
23 USB B
USB port for recording/playback
USB status indicator
24 Remote control signal sensor
Distance: Within approx. 7 m directly in front
Angle: Approximately 20° up and down, 30° left and right
25 Adjust the volume of microphone 1
26 Adjust the volume of microphone 2 or guitar
27 Microphone 2 or guitar switch
28 Select the DJ jukebox
29 Select MP3 album or track browsing mode
30 Change the illumination setting
Browse MP3 tracks or albums
Change DJ jukebox playback mode
31 Display panel

6 Service Mode

This unit is equipped with features of service mode & doctor mode setting for checking the functions & reliability.

6.1. Self Diagnostic Mode

Item		FL display	Key operation
Mode name	**Description**		
Service Mode	To enter into Service Mode checking.	SERVICE	Step 1 : Select USB A mode Step 2 : Press and hold [■] 2 seconds follow by [▶▶/▶▶I] on main unit for 2 seconds.
Error code information	System will perform a check on any unusual/error code from the memory.	Example: -- F61	Step 1 : In service mode, Press [■] on main unit. To exit, press [⏻/I] on main unit or remote control.
Delete Error code	To clear the stored in memory (EEPROM IC).	CLEAR	Step 1 : In service mode, Press [OK] on remote control more than 5 seconds. To exit, press [⏻/I] on main unit or remote control.
Cold Start	To activate cold start upon next power up. (Backup date are initialized)	USB--------	Step 1 : In service mode Press [SETUP] on the remote control. To exit, press [⏻/I] on main unit or remote control.
Opecon Version	Opecon version display	Opecon Version: 4LA YYY	Step 1 : Enter service mode Press [DISPLAY] on the remote control. To exit, press [⏻/I] on main unit or remote control.

6.2. Self Diagnostic Function Error Code

Self-Diagnostic Function provides information on any problems occurring for the unit and its respective components by displaying the error codes. These error code such as U**, H** and F** are stored in memory and held unless it is cleared.
The error code is automatically display after entering into self-diagnostic mode.

6.2.1. Power Supply Error Code Table

Item		FL Display	Key Operation
Mode Name	Description		Front Key
Error Code F61	Diagnosis Contents: DAMP output abnormal. DC_DET (SOC Pin 108)= L (NG). DC DET is checked by reading the input 2x20ms, F61 error code shall be memorized	F61	Press [■] on main unit for next error.
Error Code F76	Diagnosis Contents: Power supply abnormal. PDET (SOC Pin 107) = L (NG) or PDET +46V (SOC Pin 13) = H (NG) PDET and PDET +46V is checked by reading the input 2x1ms, F76 error code shall be memorized.	F76	Press [■] on main unit for next error.

6.2.2. Bluetooth Error Code Table

Item		FL Display	Key Operation
Mode Name	Description		Front Key
Error Code F70	Diagnosis Contents: Bluetooth Communication. Communication between Bluetooth module and micro-p abnormal.	F70	Press [■] on main unit for next error.
Error Code F77	Diagnosis Contents: Bluetooth Address Error If there is no valid Bluetooth address stored in the EEPROM IC.	F77	Press [■] on main unit for next error.

6.3. Doctor Mode

Note : To enter the Doctor Mode, please use MAX770 remote control. (Part No : N2QAYB000915)

6.3.1. Doctor Mode Table 1

	Item	FL Display	Key Operation
Mode Name	Description		Front Key
Doctor Mode	To enter into Doctor Mode for checking of various items and displaying EEPROM check sum and Opecon firmware version. Note: The Opecon firmware version as shown is an example. It will be revised when there is updates. Displaying of 1. Year Develop. 2. Model Type. 3. ROM Type. 4. Firmware Version. 5. SDK Version.	(Display 1) 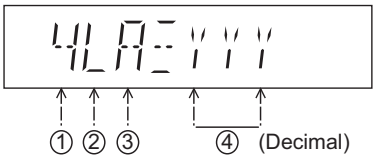 (Display 2) 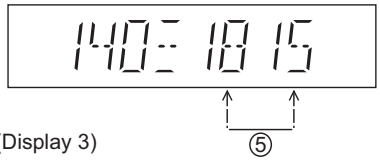 (Display 3) 	In AUX Mode: 1. Press [■] button on main unit follow by [4] and [7] on remote control. 2. To cancel this mode, press [0] button on the remote control or press [POWER,⏻/I] button on Main Unit
Cold Start	To active cold start upon next AC power up when reset start is execute the next time.	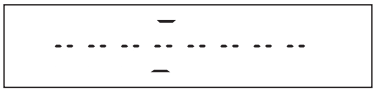	In Doctor Mode: 1. Press [4] button on the remote control. 2. To cancel this mode, press [0] button on the remote control or press [POWER,⏻/I] button on Main Unit
Volume Setting Check	To check the volume setting of the main unit.	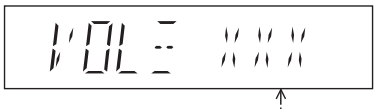 	In Doctor Mode: 1. Press below button on the remote control. Press [7]: VOL50 Press [8]: VOL35 Press [9]: VOL0 2. To cancel this mode, press [0] button on the remote control or press [POWER,⏻/I] button on Main Unit
FL Display Check	To check the FL segment display. All segments will light up while all LED blink at 0.5s intervals.	 	In Doctor mode: 1. Press [1] button on the remote control. 2. To cancel this mode, press [0] button on the remote control or press [POWER,⏻/I] button on Main Unit

6.3.2. Doctor Mode Table 2

Item		FL Display	Key Operation
Mode Name	Description		Front Key
Bluetooth mac Address Checking	Bluetooth Address Check	000-973E Display of BlueTooth MAC Address will scroll forever	In Doctor Mode: 1. Press [10] →[4] →[1] and display will show. 2. To cancel this mode press [POWER,⏻/I] button on Main Unit
Bluetooth Module Check	Bluetooth module check and NFC writing	Device name is set to **[SC-CMAX5-XX]** X= region number (Please refer table below). Region / Model / Series 1 / CMAX5 / PH 2 / CMAX5 / GS 3 / CMAX5 / PR 4 / CMAX5 / JPN 5 / CMAX5 / LM	In Doctor Mode: 1. Press [10] →[2] →[5] and display will show. 2. To cancel this mode press [POWER,⏻/I] button on Main Unit
Region Check	Checking for model no and Region	REG-YYY AD value of region pin is check and display will show [REG-YYY] based on region table. YYY = 1 ~ 5 based on region table as below. Region / Model / Series 1 / CMAX5 / PH 2 / CMAX5 / GS 3 / CMAX5 / PR 4 / CMAX5 / JPN 5 / CMAX5 / LM	In Doctor Mode: 1. Press [10] →[1] →[6] button on the remote control. 2. To cancel this mode, press [0] button on the remote control or press [POWER,⏻/I] button on Main Unit

7 Troubleshooting Guide

● **Reset Method (Factory Shipment Status)**

1. Plug In AC cord together with (no 2)。
2. Press and hold the power button for 4 seconds then FL display will show RESET for 2 seconds。
3. Turn off the power.

● **Entering Doctor Mode**

1. Turn ON main set.
2. Press main set [Stop ■] button, then continue press the [4] & [7] of remote control. FL display will show "TΞ".
3. Go in the desired option of doctor mode by pressing the button on remote control. (Refer to Doctor Mode Table)
4. After turn off the power, you can exit from Doctor Mode.

Main set power ON	Power do not turn ON (No FL display)	Power ON by remote control ・OK	Check the 30P FFC cable connection from panel (CN6001) to Main PCB (CN2506) Check the 30P FFC cable connection from panel (CN6005) to FL Display PCB (CN6006) Tact switch operation check (S6200)	・Check standby supply PW_SYS3R3V = +3.3V ・Voltage check across the power switch. When button PCB power switch S6200 is press →0V, release →3.3V to 3.5V ・Voltage check 1) +F to −F (filament voltage across FL pin 1 to pin 44), PW_VEE ・Voltage check of IC2103 Pin 10 Output of L2101 = +15V
		Power ON by remote control ・NG	Check the 30P FFC cable connection from panel (CN6001) to Main PCB (CN2506) Check the 30P FFC cable connection from panel (CN6005) to FL Display PCB (CN6006) Touch sensor IC operation check (IR6500). Check the power supply output of SMPS Check the AC inlet and AC cord Check fuse cut	
	Power input but turn off immediately	Error contents F76	Power off the unit during FL blinking of F76 (250ms ON/250ms OFF).	・Check each DC supply output voltage (eg +40V, +15V, +12V, +5V, +3.3V,+1.8V)
		Error contents F61	Power off the unit during FL blinking of F61 (250ms ON/250ms OFF).	・Check the Fan Connection ・Check the IC overcurrent ・overheating ・failure of [Digital Amplifier] → [Digital Amplifier] exchange.
	Power input but FL display error	Error contents F70 BT	Check Connection of Bluetooth	・[Main] BT & communication error of the microcomputer → [Main] board exchange or [BT] module exchange.
Fuse cut	After replacement, cut again at outlet connection	The primary side of main power supply abnormal	Check the continuity of primary side power circuit	・Change SMPS Module
	After replacement, cut again at power on	The secondary side of main power supply abnormal	Check the continuity of secondary side power circuit	・Check each DC supply output voltage (eg +40V, +15V, +12V, +5V, +3.3V,+1.8V)
FL display checking	Check the all segments display by Doctor Mode	Some FL segment not lighting	Failure of FL Display (FL6000)	・Change to a new FL Display (FL6000) on the Panel PCB.
Audio confirmation	Sound skip from front speaker（Bluetooth input)		Check the radio wave interference of other wireless equipment (cordless phone, microwave oven, WiFi, other BT devices).	Place other wireless equipment more than 2 meters away from main unit
	No sound from front speaker（Bluetooth input)	VFD display BLUETOOTH READY (PAIRING OK)	Check the connection to front speaker	Check Main board (Micon/DSP & Digital Amplifier Circuit)--> Main board change
		VFD does not display your Device name (PAIRING FAILED)	Check BT module connection at Panel & main board	Check Panel board connector CN6002 & CN6001 Check Mainl board connector CN2506
	Bluetooth (BT)	Unable to view CMAX5 in list of BT devices in external BT device		Check Q2117 Colector +5V Check connection Bluetooth data UART_TX & UART_RX (IC 1001 Pin 101&102) If all above are OK, BT module failure--> Main board change.
	No Outout From USB	VFD display Track	Check the connection to front speaker	Check Main board (Micon/DSP & Digital Amplifier Circuit)--> Main board change
		VFD display NO USB	Check the Connection USB PCB to main PCB	Check Panel board connector CN6401 Check Mainl board connector CN2511 Check IC2100 Pin 10 fter L2106 = +5.6V Check connection USB data D+/D- (IC 1001 Pin 97 & 98)
	USB			
	No Outout From AUX1/2	No Output from AUX 1/2	Check the connection to front speaker Check Connection Panel to Main	Check Main board (Micon/DSP & Digital Amplifier Circuit)--> Main board change Check Panel board connector CN6300 Check Mainl board connector CN2510 At Panel Check IC6101 VCC Pin 16 = +12V Selector Pin 10 = +12V (AUX1) , 0V (AUX2) At Main Board Check IC4802 VDD Pin 4 = +3.3V VCC Pin 3 = +5.6V
	AUX1/2			
	No Outout From Mic	No Output from AUX 1/2	* Check Guitar SW Possition to Mic/Guitar * Check the connection to front speaker * Check Connection Panel to Main	Check Panel board connector CN1401 Check Mainl board connector CN2507 At Panel Check IC1400 & IC1401 VCC Pin 9 = +12V At Main Board Check IC4804 VDD Pin 4 = +3.3V VCC Pin 3 = +5.6V
	Mic/Guitar			

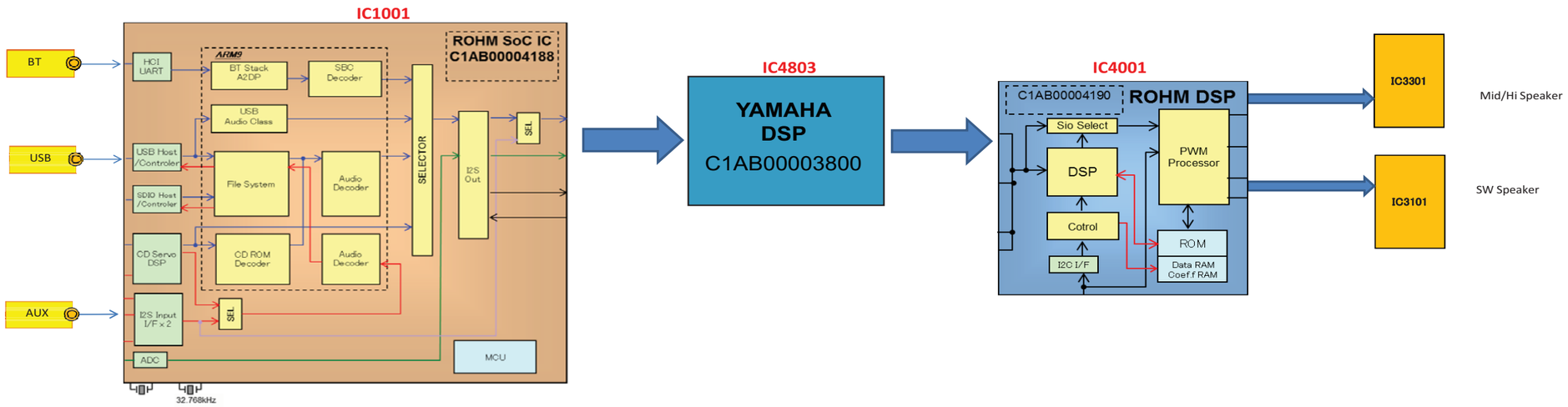
IC1001
ROHM SoC IC
C1AB00004188
BT
USB
AUX
HCI UART
BT Stack A2DP
SBC Decoder
USB Audio Class
USB Host /Controler
SDIO Host /Controler
File System
Audio Decoder
CD Servo DSP
CD ROM Decoder
Audio Decoder
I2S Input I/F x 2
SEL
SELECTOR
I2S Out
SEL
ADC
MCU
32.768kHz
IC4803
YAMAHA
DSP
C1AB00003800
IC4001
C1AB00004190
ROHM DSP
Sio Select
DSP
PWM Processor
Cotrol
ROM
I2C I/F
Data RAM Coef.f RAM
IC3301
Mid/Hi Speaker
IC3101
SW Speaker

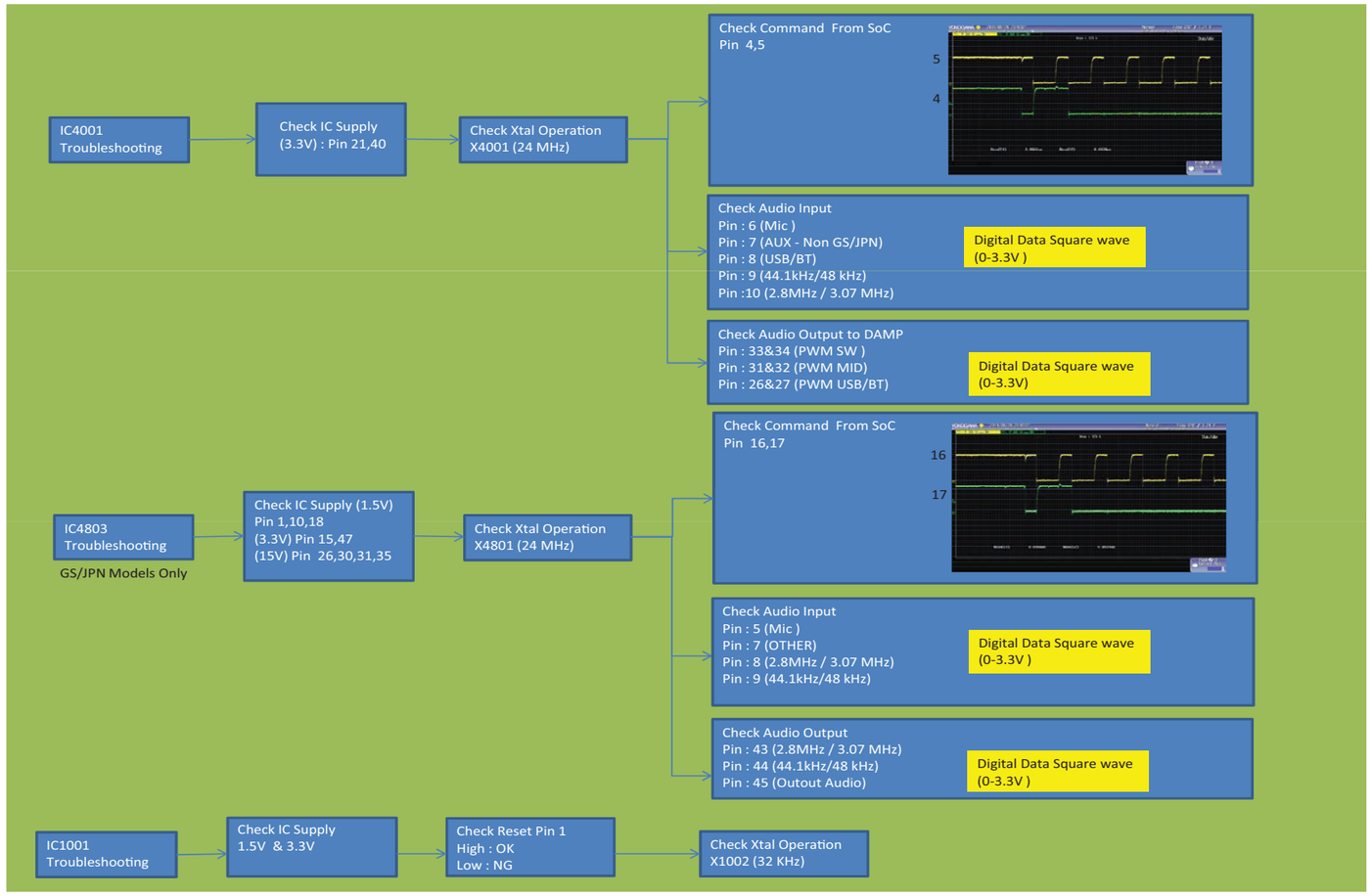
IC4001 Troubleshooting
Check IC Supply (3.3V) : Pin 21,40
Check Xtal Operation X4001 (24 MHz)
Check Command From SoC Pin 4,5
5
4
Check Audio Input
Pin : 6 (Mic)
Pin : 7 (AUX - Non GS/JPN)
Pin : 8 (USB/BT)
Pin : 9 (44.1kHz/48 kHz)
Pin :10 (2.8MHz / 3.07 MHz)
Digital Data Square wave (0-3.3V)
Check Audio Output to DAMP
Pin : 33&34 (PWM SW)
Pin : 31&32 (PWM MID)
Pin : 26&27 (PWM USB/BT)
Digital Data Square wave (0-3.3V)
IC4803 Troubleshooting
GS/JPN Models Only
Check IC Supply (1.5V) Pin 1,10,18 (3.3V) Pin 15,47 (15V) Pin 26,30,31,35
Check Xtal Operation X4801 (24 MHz)
Check Command From SoC Pin 16,17
16
17
Check Audio Input
Pin : 5 (Mic)
Pin : 7 (OTHER)
Pin : 8 (2.8MHz / 3.07 MHz)
Pin : 9 (44.1kHz/48 kHz)
Digital Data Square wave (0-3.3V)
Check Audio Output
Pin : 43 (2.8MHz / 3.07 MHz)
Pin : 44 (44.1kHz/48 kHz)
Pin : 45 (Outout Audio)
Digital Data Square wave (0-3.3V)
IC1001 Troubleshooting
Check IC Supply 1.5V & 3.3V
Check Reset Pin 1 High : OK Low : NG
Check Xtal Operation X1002 (32 KHz)

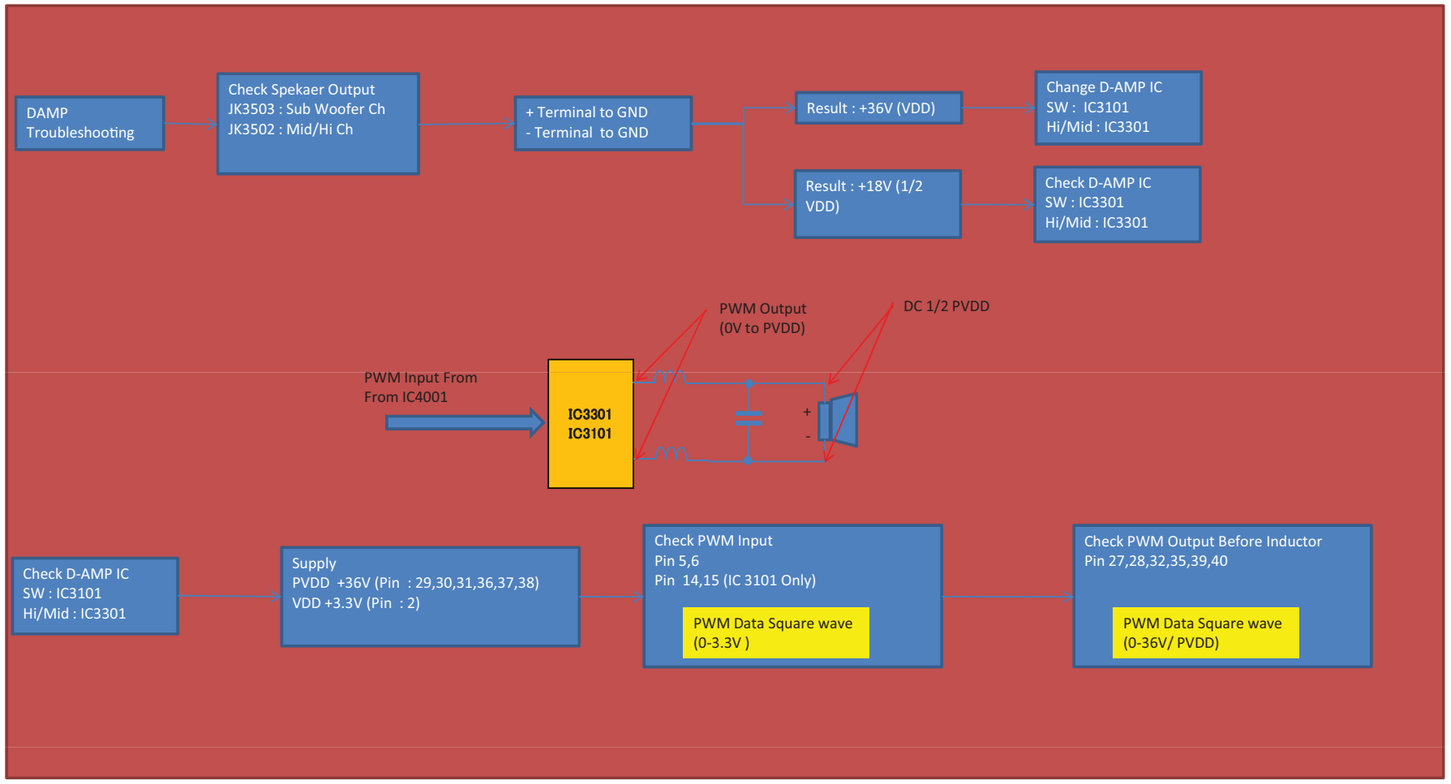
DAMP
Troubleshooting
Check Spekaer Output
JK3503 : Sub Woofer Ch
JK3502 : Mid/Hi Ch
+ Terminal to GND
- Terminal to GND
Result : +36V (VDD)
Change D-AMP IC
SW : IC3101
Hi/Mid : IC3301
Result : +18V (1/2 VDD)
Check D-AMP IC
SW : IC3301
Hi/Mid : IC3301
PWM Output
(0V to PVDD)
DC 1/2 PVDD
PWM Input From
From IC4001
IC3301
IC3101
+
-
Check D-AMP IC
SW : IC3101
Hi/Mid : IC3301
Supply
PVDD +36V (Pin : 29,30,31,36,37,38)
VDD +3.3V (Pin : 2)
Check PWM Input
Pin 5,6
Pin 14,15 (IC 3101 Only)
PWM Data Square wave
(0-3.3V)
Check PWM Output Before Inductor
Pin 27,28,32,35,39,40
PWM Data Square wave
(0-36V/ PVDD)

8 Disassembly and Assembly Instructions

- **This section describes the disassembly and/or assembly procedures for all major printed circuit boards & main components for the unit. (You may refer to the section of “Main components and P.C.B Locations” as described in the service manual)**
- **Before carrying out the disassembly process, please ensure all the safety precautions & procedures are followed.**
- **During the disassembly and/or assembly process, please handle with care as there may be chassis components with sharp edges.**
- **Avoid touching heatsinks due to its high temperature after prolong use. (See caution as described below)**

CAUTION: HOT!!
PLEASE DO NOT
TOUCH THE HEAT SINK

- **During disassembly and assembly, please ensure proper service tools, equipments or jigs is being used.**
- **During replacement of component parts, please refer to the section of “Replacement Parts List” as described in the service manual.**
- **Select items from the following indexes when disassembly or replacement are required.**

- **Disassembly of Handle Bar Unit**
- **Disassembly of Rear Panel**
- **Disassembly of Amp Unit Block**
- **Disassembly of Main P.C.B. Assembly**
- **Disassembly of SMPS Module & Voltage Selector P.C.B.**
- **Disassembly of Top Panel Unit**
- **Disassembly of Bluetooth P.C.B. Assembly**
- **Disassembly of Panel P.C.B.**
- **Disassembly of FL Display P.C.B.**
- **Disassembly of Top Front Panel Block**
- **Disassembly of Tweeter Speaker (6cm)**
- **Disassembly of Woofer Speaker (10cm)**
- **Disassembly of Center Front Panel**
- **Disassembly of Subwoofer Front Panel Block**
- **Disassembly of Woofer Speaker (25cm)**
- **Disassembly of Lighting Wire P.C.B. Assembly**

8.1. Disassembly flow chart

The following chart is the procedure for disassembling the casing and inside parts for internal inspection when carrying out the servicing.
To assemble the unit, reverse the steps shown in the chart below.

8.1.1. Amp Unit

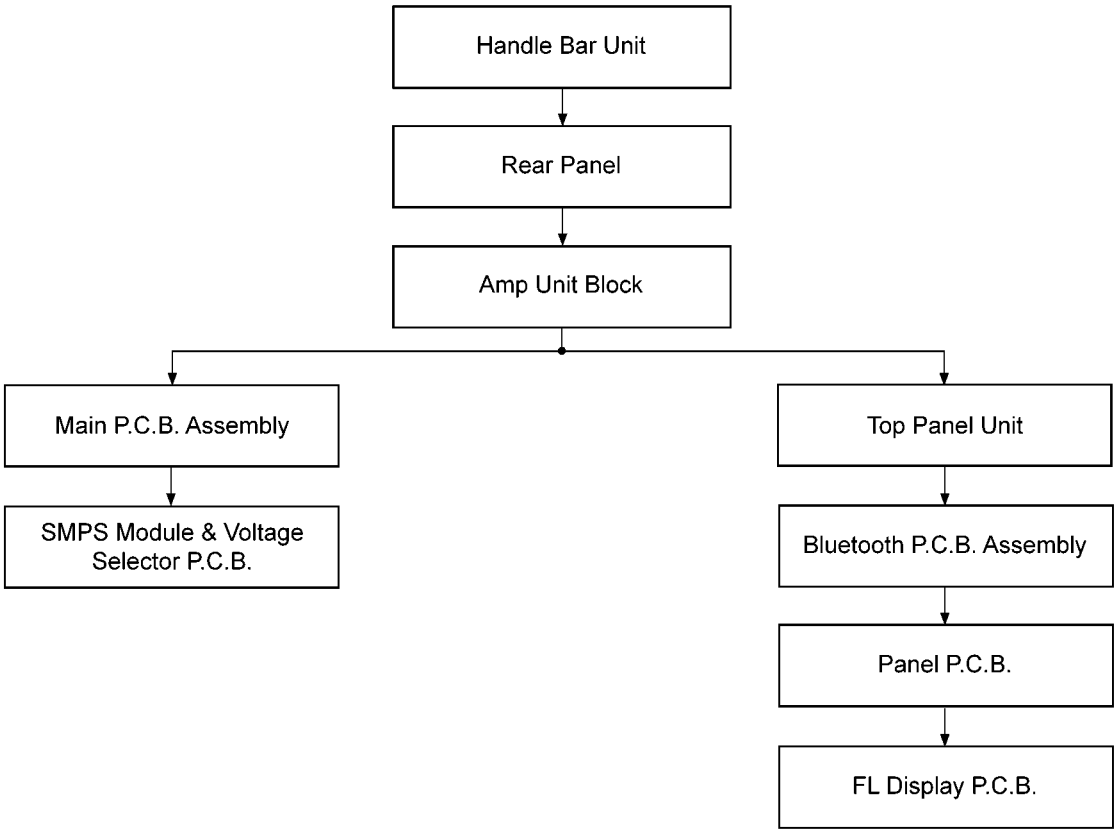

8.1.2. Speaker Block

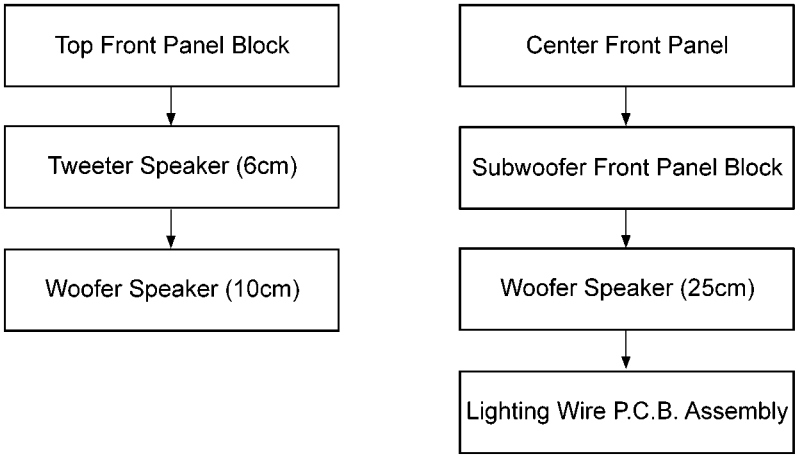

8.2. Type of screws

CAUTION NOTE:
Please use original screw and at correct locations.

Below shown is part no. of different screw types used:

ⓐ : XYN5+J20FJK	ⓔ : RHD26016-1L	ⓘ : RHD26043-1
ⓑ : XTB4+20AFJK	ⓕ : XTB3+10JFJ	ⓚ : XTB3+16GFJK
ⓒ : XTB3+10JFJK	ⓖ : RHDX30005-J	ⓛ : XTB3+10GFJ
ⓓ : RHD26046-L	ⓗ : XTB4+20AFJK	ⓜ : XTB4+10GFJ

8.3. Main Parts Location Diagram

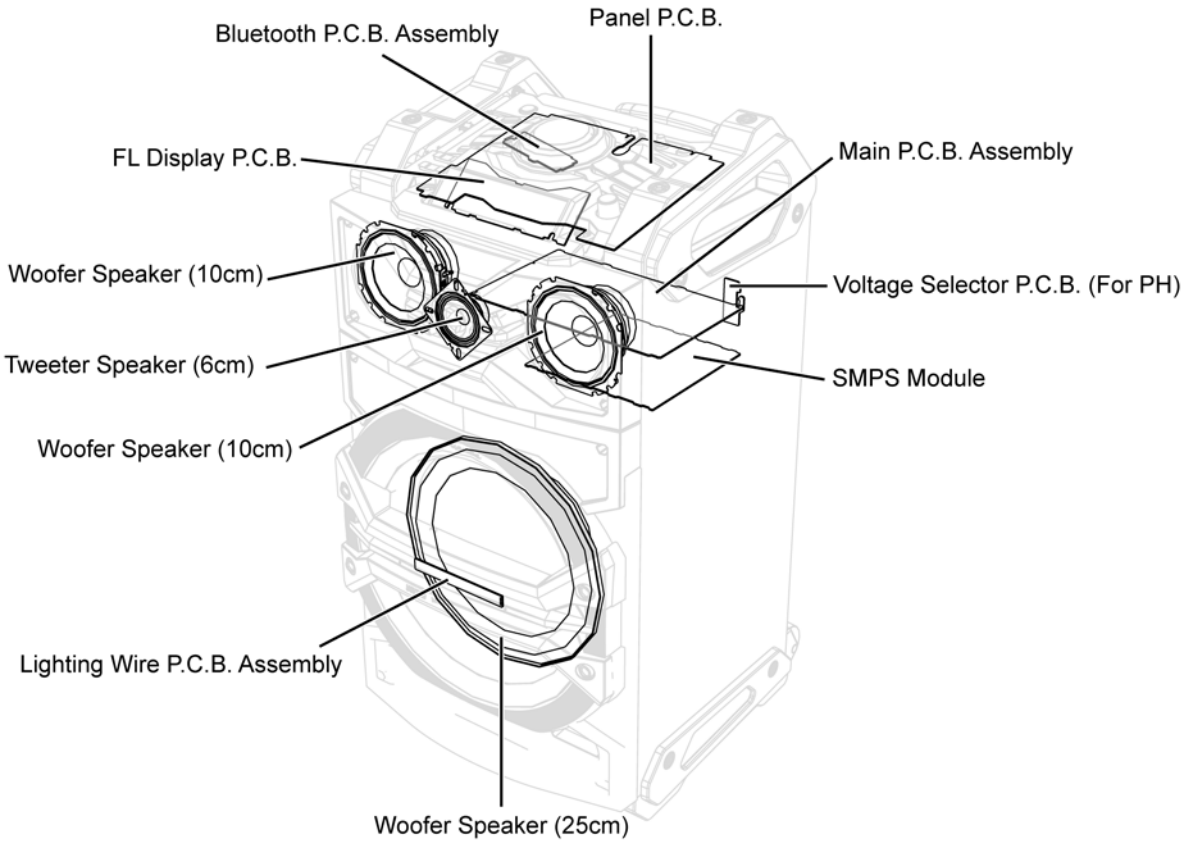

8.4. Disassembly of Handle Bar Unit

Step 1 : Remove 4 screws.
Step 2 : Remove Handle Bar Unit.

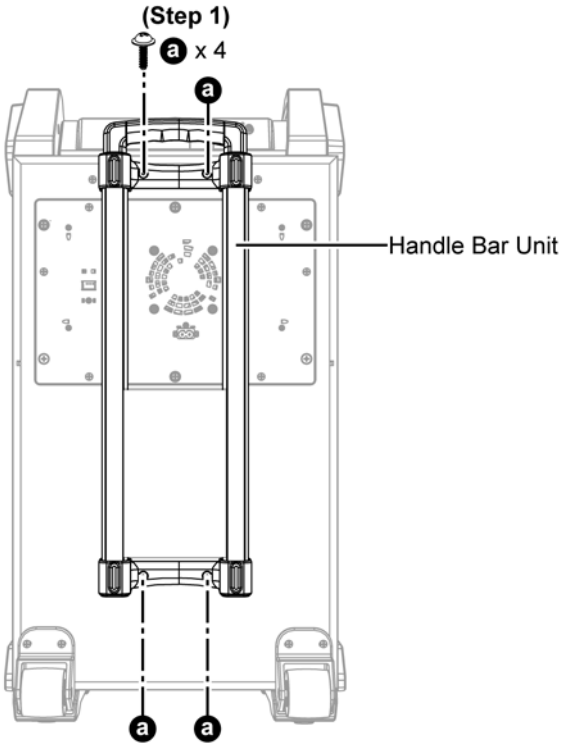

8.5. Disassembly of Rear Panel

- Refer to “Disassembly of Handle Bar Unit”

Step 1 : Remove 6 screws.
Caution : During assembling, fixed the screws in sequence of 1 to 7 as shown.

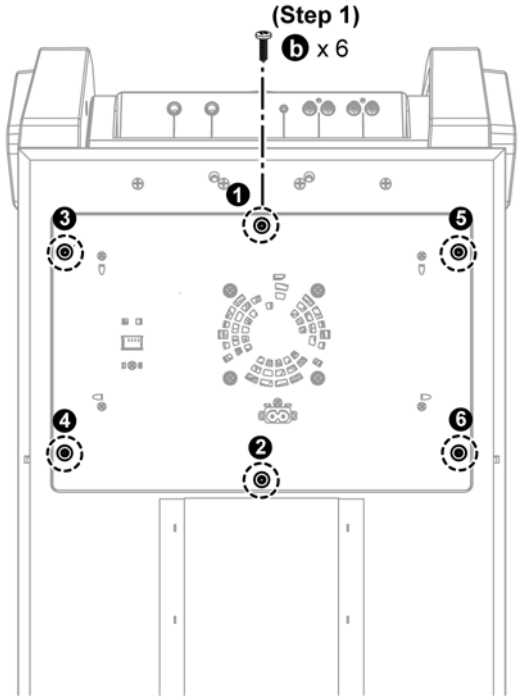

Step 2 : Remove screws.
Step 3 : Slightly lift up Rear Panel.

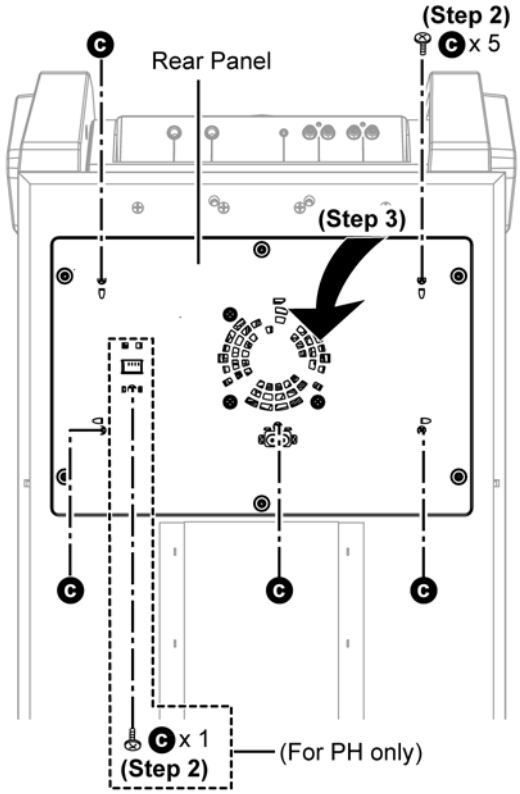

• (For PH only)

Step 4 : Remove Voltage Selector P.C.B. as shown.

Caution: During assembling, ensure Voltage Selector P.C.B. is inserted properly into the Rear Panel as Red Wire on the top and Black Wire on the lower as picture shown.

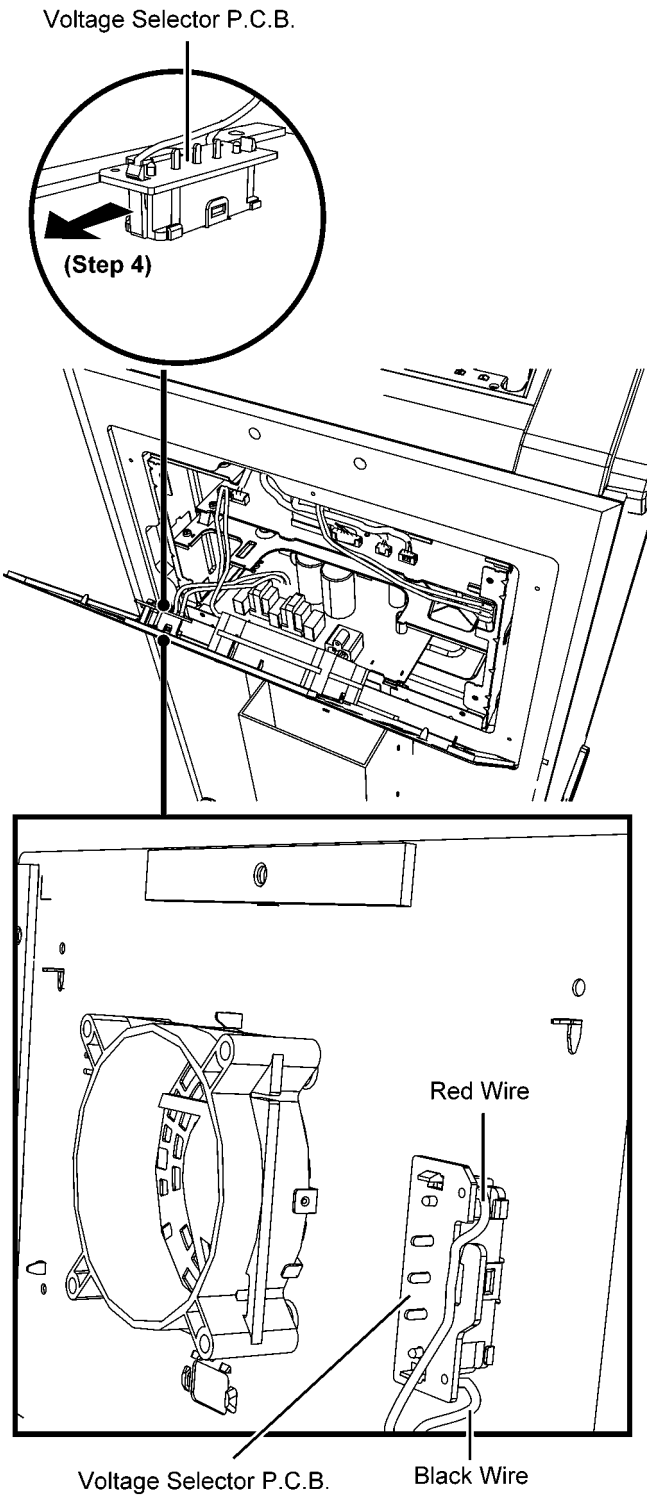

Step 5 : Detach 2P Fan wires at connector (CN2101) on the Main P.C.B. Assembly.

Step 6 : Remove Rear Panel.

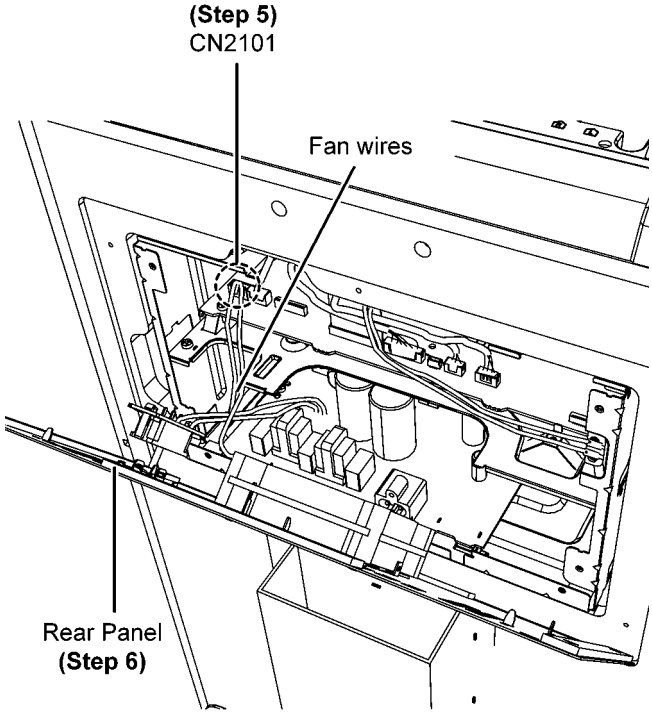

8.6. Disassembly of Amp Unit Block

- Refer to “Disassembly of Handle Bar Unit”
- Refer to “Disassembly of Rear Panel”

Step 1 : Detach 4P wire at connector (CN2508) on Main P.C.B. Assembly.
Step 2 : Detach 30P FFC at connector (CN2506) on Main P.C.B. Assembly.
Step 3 : Detach 10P wire at connector (CN2511) on Main P.C.B. Assembly.
Step 4 : Detach 4P wire at connector (CN2510) on Main P.C.B. Assembly.
Step 5 : Detach 6P wire at connector (CN2507) on Main P.C.B. Assembly.
Step 6 : Detach grounding wires.
Step 7 : Slightly lift up Amp Unit Block.
Caution : Do not exert strong force as it may damage the wiring within.

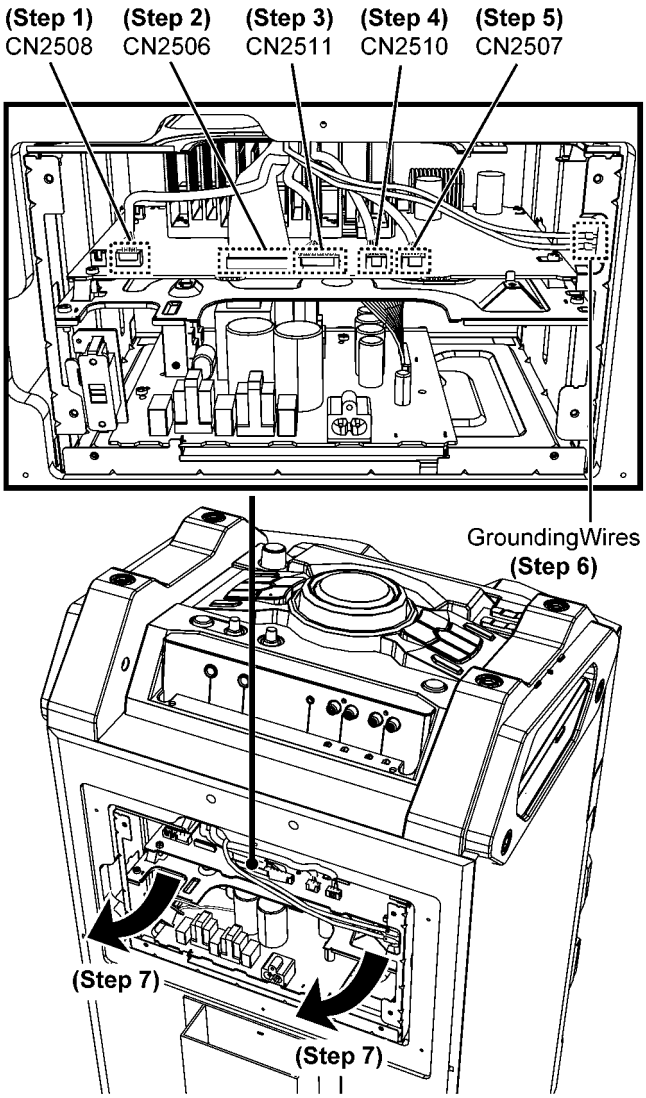

Step 8 : Place Amp Unit Block on the support block.
Step 9 : Cut the cable tie.
Step 10 : Detach 4P wire at connector (CN2604) on Main P.C.B. Assembly.
Step 11 : Detach 2P wire at connector (JK3503) on Main P.C.B. Assembly.
Step 12 : Detach 4P wire at connector (JK3502) on Main P.C.B. Assembly.
Step 13 : Remove Amp Unit Block.

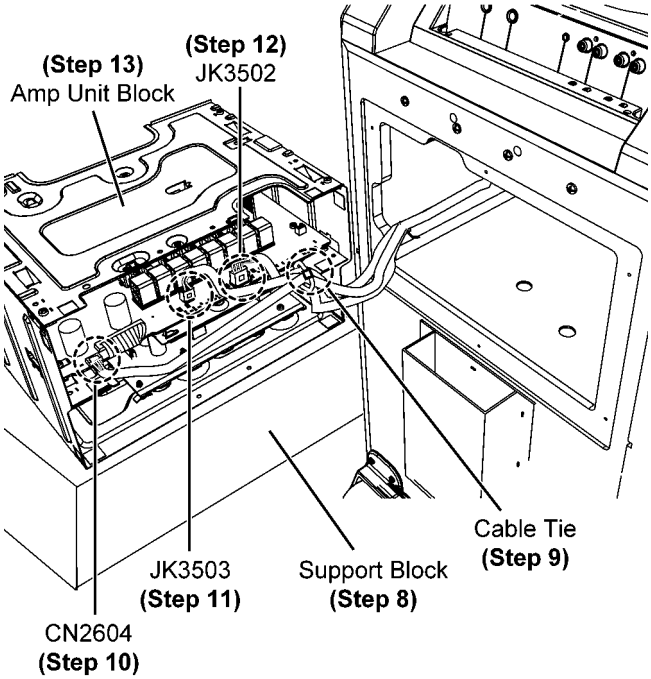

8.7. Disassembly of Main P.C.B. Assembly

- Refer to “Disassembly of Handle Bar Unit”
- Refer to “Disassembly of Rear Panel”
- Refer to “Disassembly of Amp Unit Block”

Step 1 : Remove 4 screws.
Step 2 : Remove Support Plate.

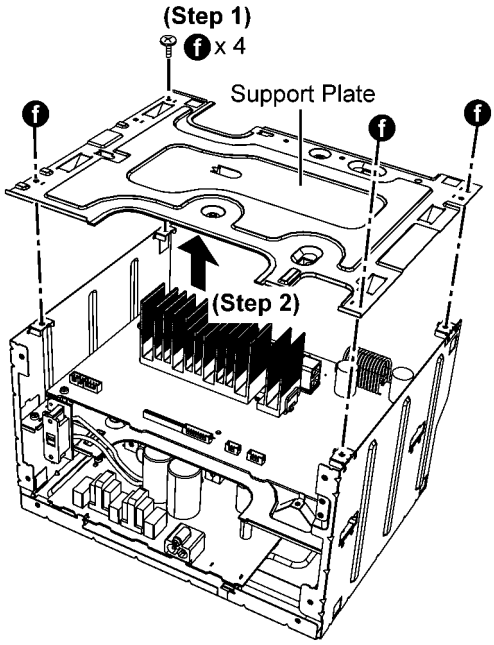

Step 3 : Detach 13P wire at connector (CN2103) on Main P.C.B. Assembly.
Step 4 : Remove 4 screws.
Step 5 : Remove 1 screw.
Step 6 : Remove Main P.C.B. Assembly.

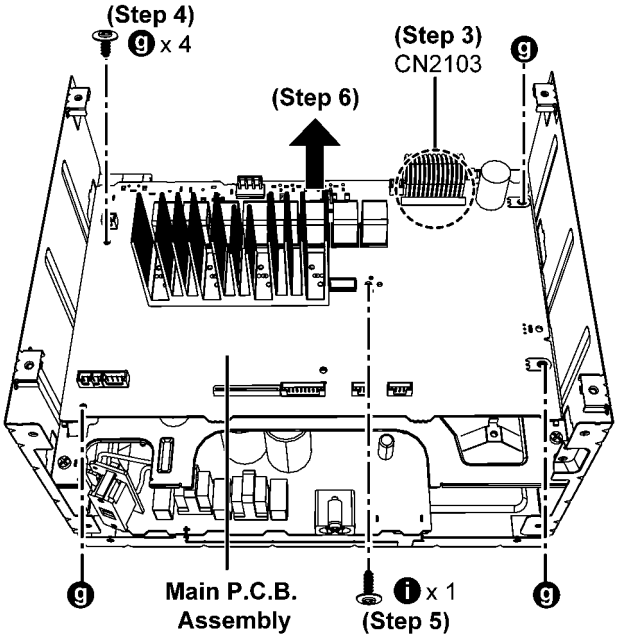

8.8. Disassembly of SMPS Module & Voltage Selector P.C.B.

- Refer to “Disassembly of Handle Bar Unit”
- Refer to “Disassembly of Rear Panel”
- Refer to “Disassembly of Amp Unit Block”
- Refer to “Disassembly of Main P.C.B. Assembly”

Step 1 : Remove 4 screws.
Step 2 : Remove Support Plate.

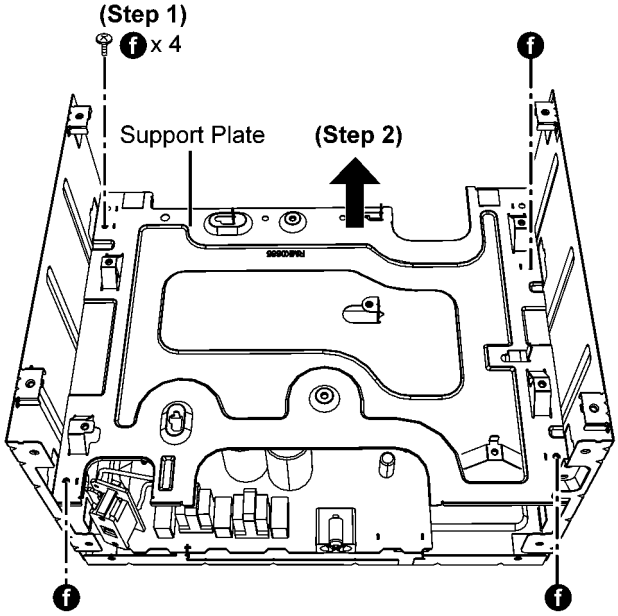

Step 3 : Remove 3 screws.
Step 4 : Release P.C.B. spacers.
Step 5 : Remove SMPS Module and Voltage Selector P.C.B..

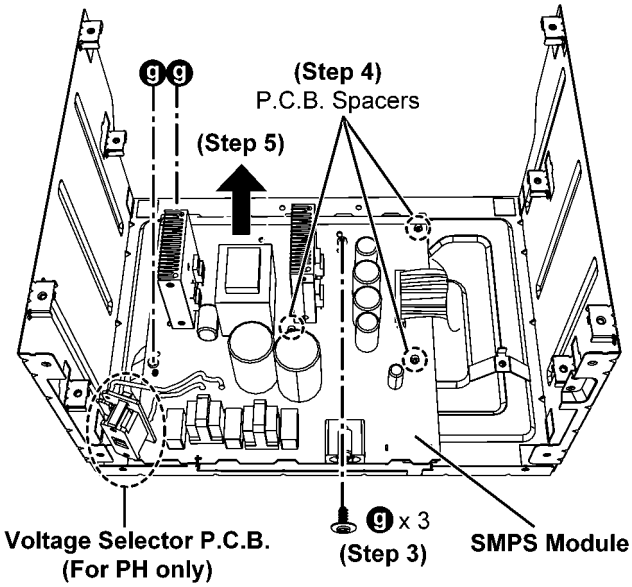

8.9. Disassembly of Top Panel Unit

- Refer to “Disassembly of Handle Bar Unit”
- Refer to “Disassembly of Rear Panel”
- Refer to “Disassembly of Amp Unit Block”

Step 1 : Remove 4 screws.
Step 2 : Remove Top Panel Unit.

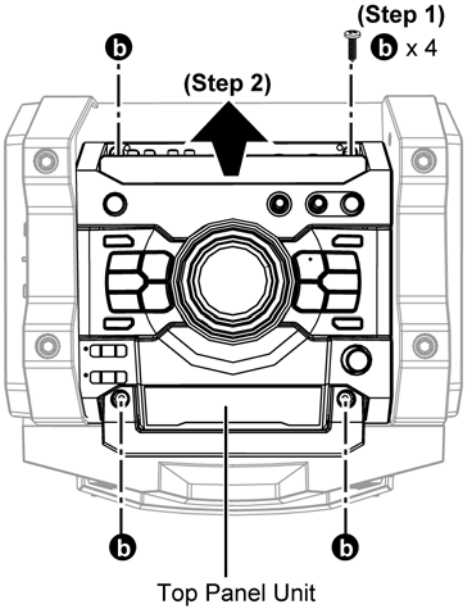

8.10. Disassembly of Bluetooth P.C.B. Assembly

- Refer to “Disassembly of Handle Bar Unit”
- Refer to “Disassembly of Rear Panel”
- Refer to “Disassembly of Amp Unit Block”
- Refer to “Disassembly of Top Panel Unit”

Step 1 : Detach 12P FFC at connector (P7701) on Bluetooth P.C.B. Assembly.
Step 2 : Remove 2 screws.
Step 3 : Remove Bluetooth P.C.B. Assembly.

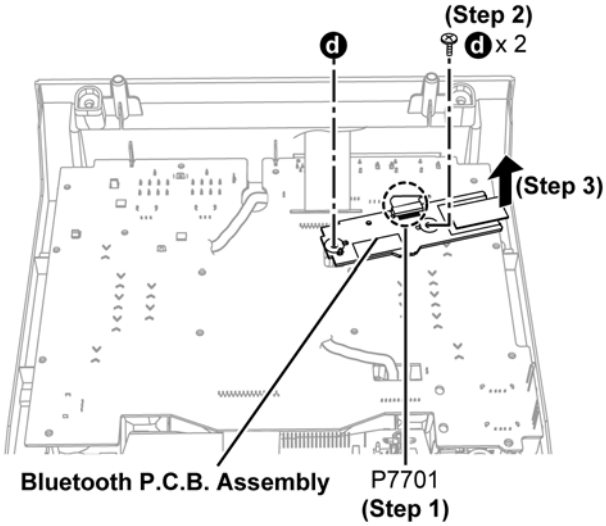

8.11. Disassembly of Panel P.C.B.

- Refer to “Disassembly of Handle Bar Unit”
- Refer to “Disassembly of Rear Panel”
- Refer to “Disassembly of Amp Unit Block”
- Refer to “Disassembly of Top Panel Unit”
- Refer to “Disassembly of Bluetooth P.C.B. Assembly”

Step 1 : Remove Volume Knob, Mic Volume Knobs & Skip Knob.

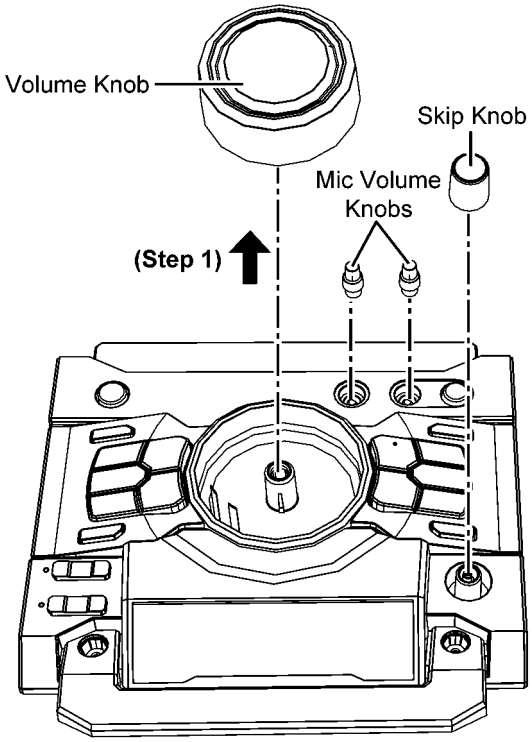

Step 2 : Remove 2 screws.

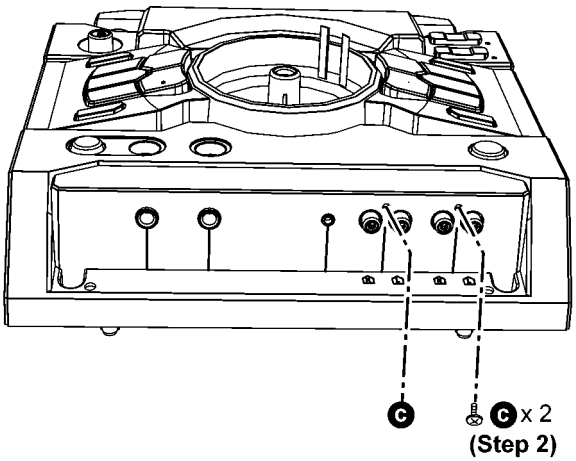

Step 3 : Remove 15 screws.

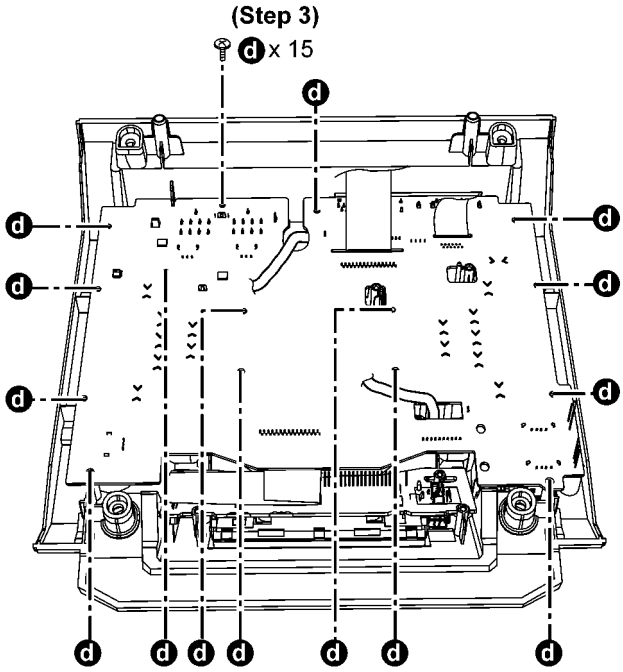

Step 4 : Lift up Panel P.C.B..

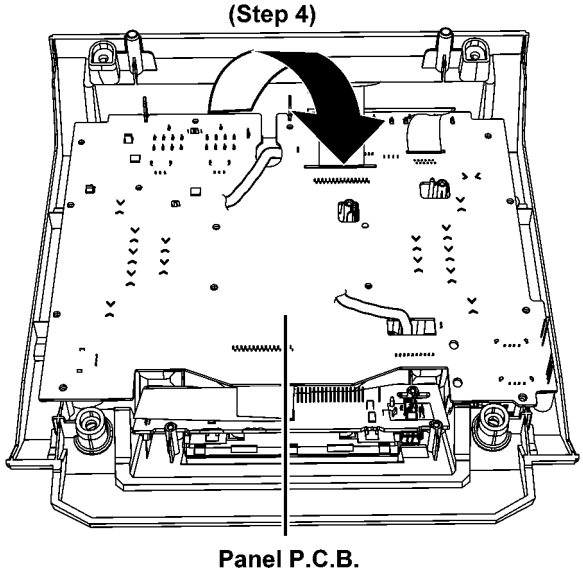

Step 5 : Detach 30P FFC at connector (CN6005) on Panel P.C.B..
Step 6 : Remove Panel P.C.B..

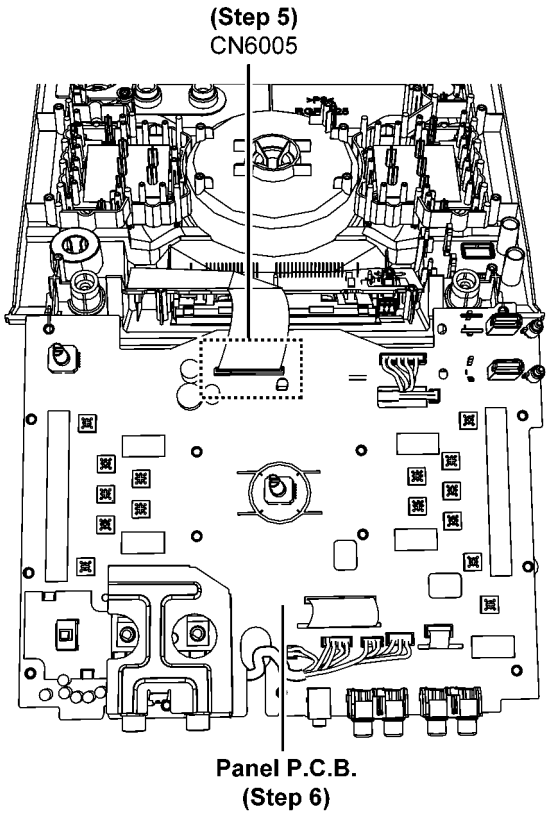

8.12. Disassembly of FL Display P.C.B.

- Refer to “Disassembly of Handle Bar Unit”
- Refer to “Disassembly of Rear Panel”
- Refer to “Disassembly of Amp Unit Block”
- Refer to “Disassembly of Top Panel Unit”
- Refer to “Disassembly of Bluetooth P.C.B. Assembly”
- Refer to “Disassembly of Panel P.C.B.”

Step 1 : Remove 4 screws.
Step 2 : Remove FL Display P.C.B..

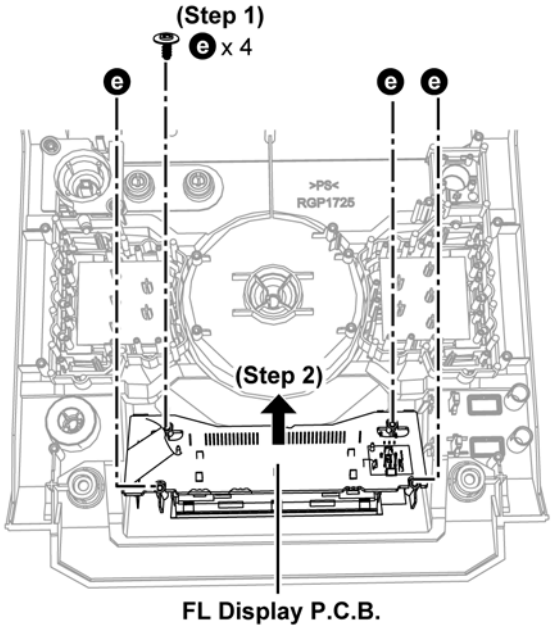

8.13. Disassembly of Top Front Panel Block

Step 1 : Remove 4 screws.
Step 2 : Detach Top Front Panel Block.

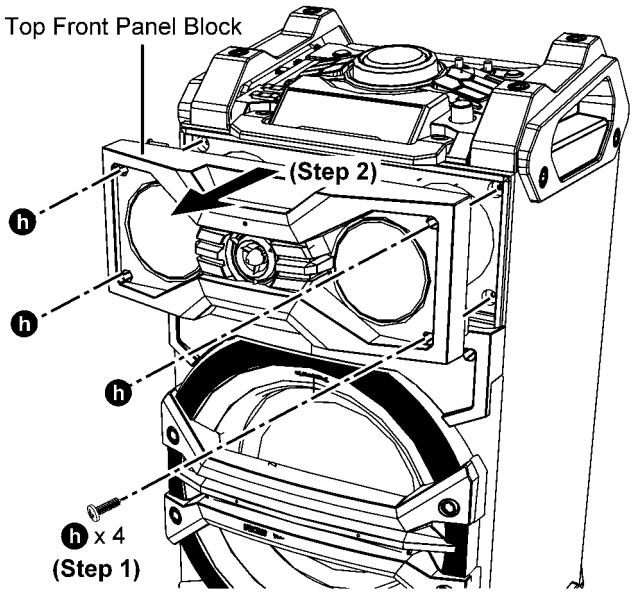

Step 3 : Detach speaker wire.
Step 4 : Remove Top Front Panel Block.

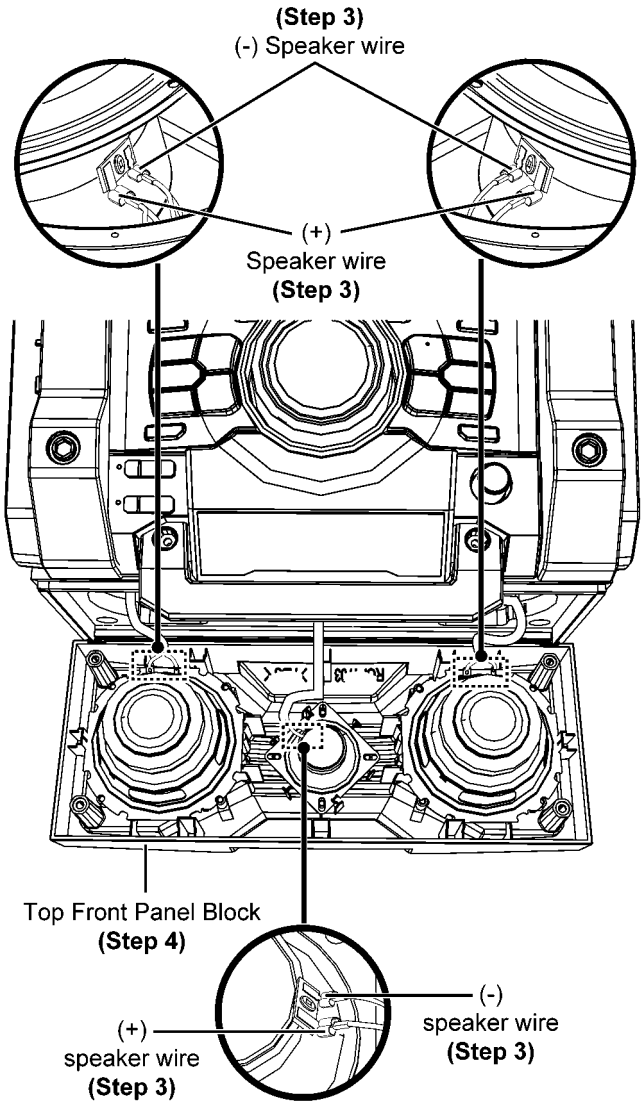

8.14. Disassembly of Tweeter Speaker (6cm)

- Refer to “Disassembly of Top Front Panel Block”

Step 1 : Detach speaker wire.
Step 2 : Remove 4 screws.
Step 3 : Remove Tweeter Speaker (6cm).

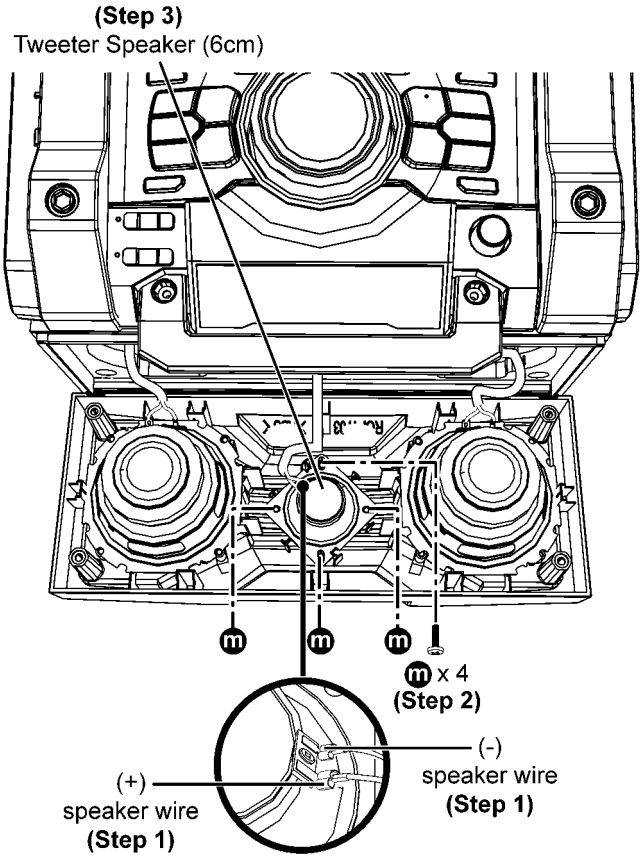

8.15. Disassembly of Woofer Speaker (10cm)

- Refer to “Disassembly of Top Front Panel Block”

Step 1 : Detach speaker wire.
Step 2 : Remove screws.
Step 3 : Remove Woofer Speakers (10cm).

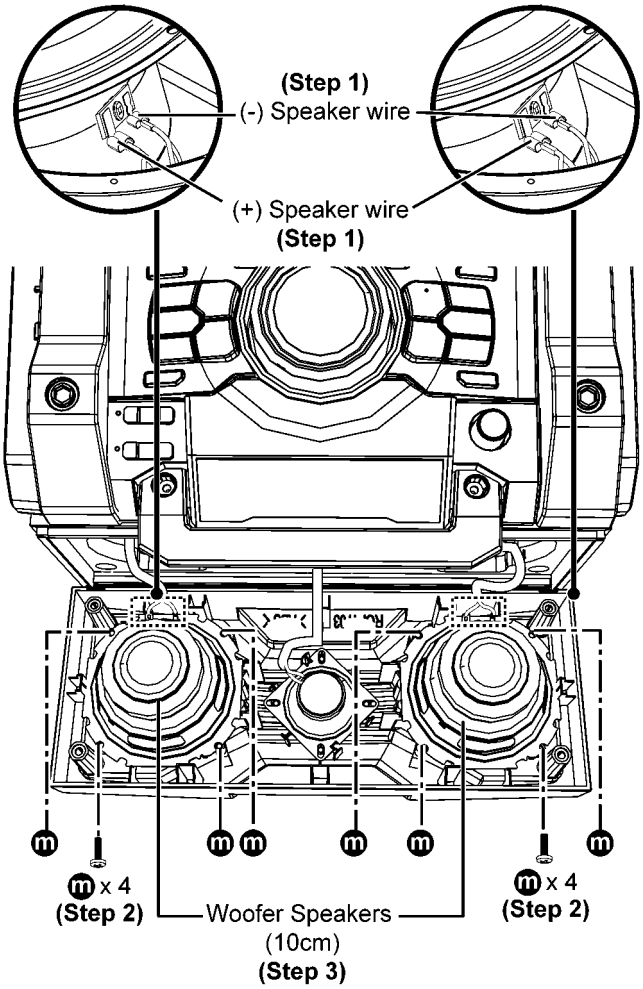

8.16. Disassembly of Center Front Panel

Step 1 : Remove 2 screws.

Step 2 : Apply light force along the boss to remove Center Front Panel.

Caution : Do not exert strong force as it may damage the Center Front Panel.

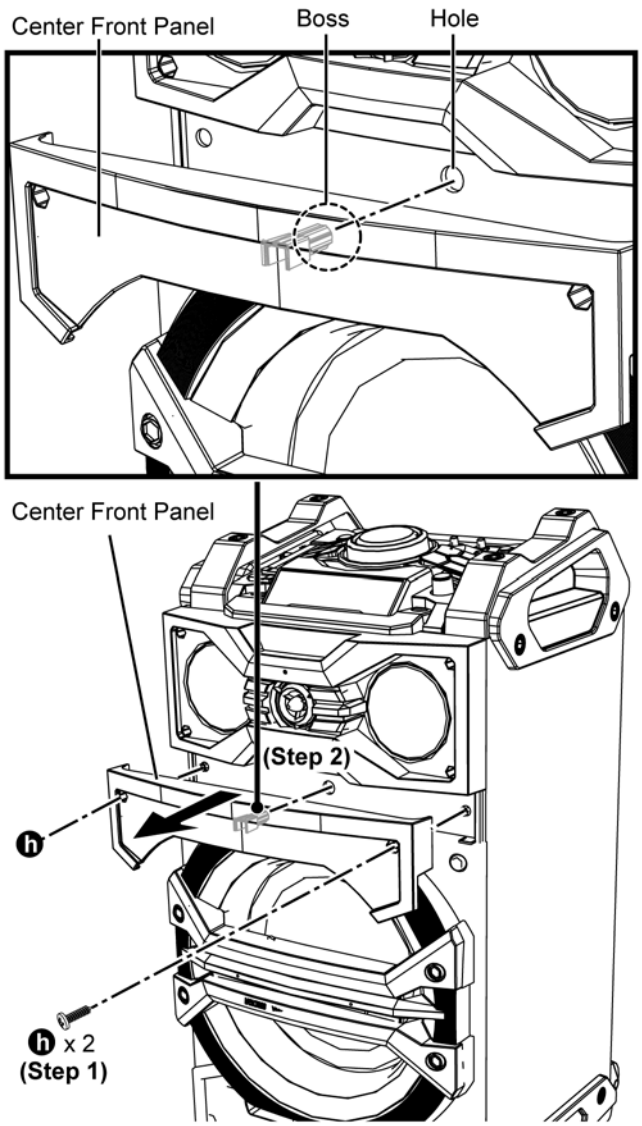

Caution 1 : Scrape off and clean up the remaining glue at the boss and hole.
Caution 2 : During assembling, align the hole of the Boss with the Center Front Panel and fix it properly.

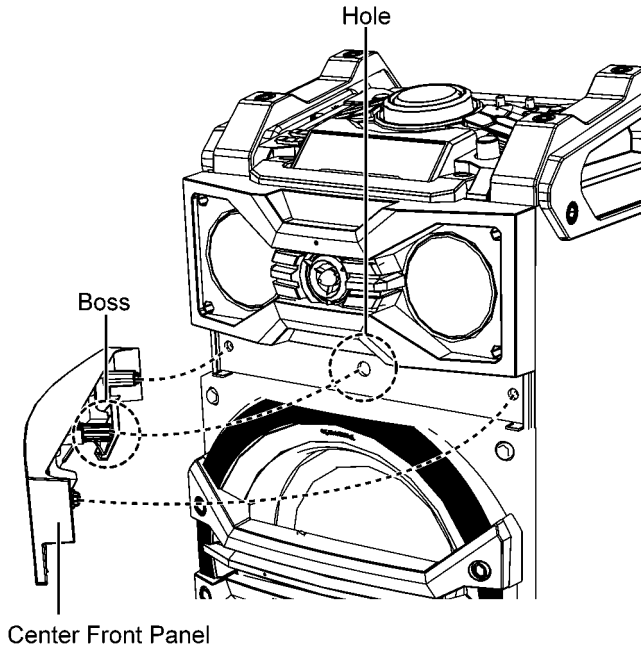

8.17. Disassembly of Subwoofer Front Panel Block

- Refer to “Disassembly of Center Front Panel”

Step 1 : Remove 4 screws.

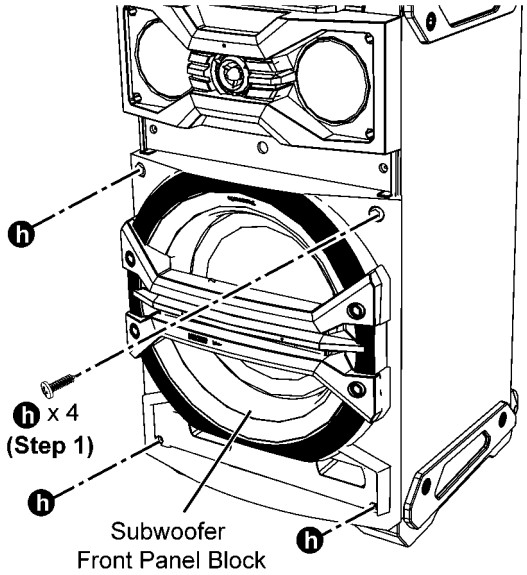

Step 2 : Insert flathead screwdriver into the grooves.

Step 3 : Apply light force to push the Subwoofer Front Panel Block as arrow shown.

Step 4 : Insert a steel rule in between the Subwoofer Front Panel Block and Speaker Cabinet Assembly.

Caution : Do not exert strong force as it may damage the Subwoofer Front Panel Block.

Step 5 : Detach Subwoofer Front Panel Block slightly by sequence (1-5) shown.

Caution : Do not exert strong force as it may damage the wiring within.

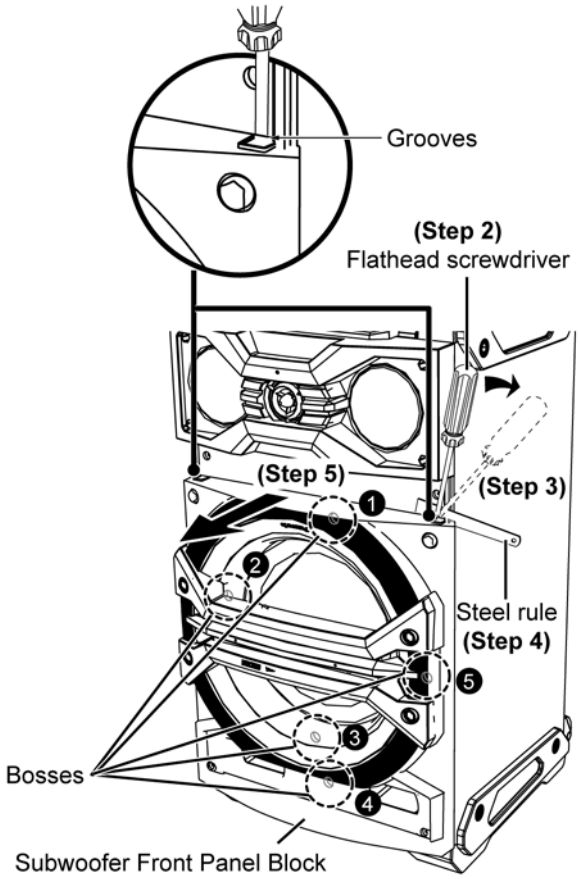

Step 6 : Lift up himelon.

Caution : Replace the himelon if they are torn during disassembling.

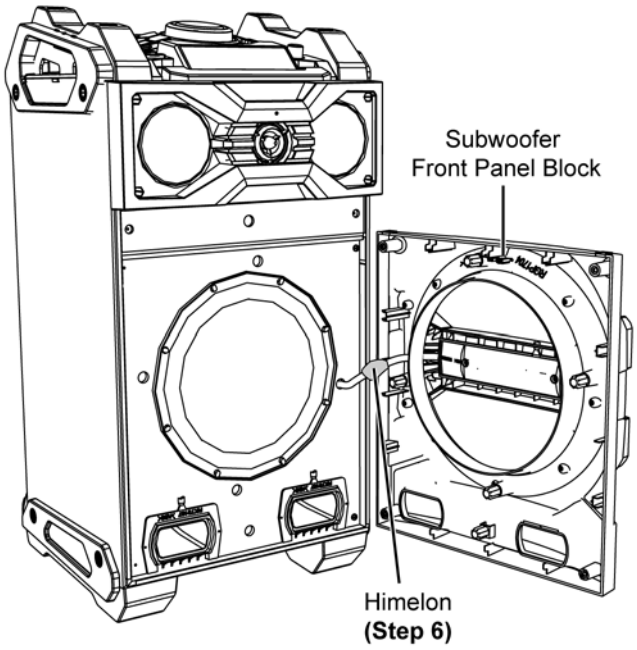

Step 7 : Detach 2P Wire Socket.

Step 8 : Remove Subwoofer Front Panel Block.

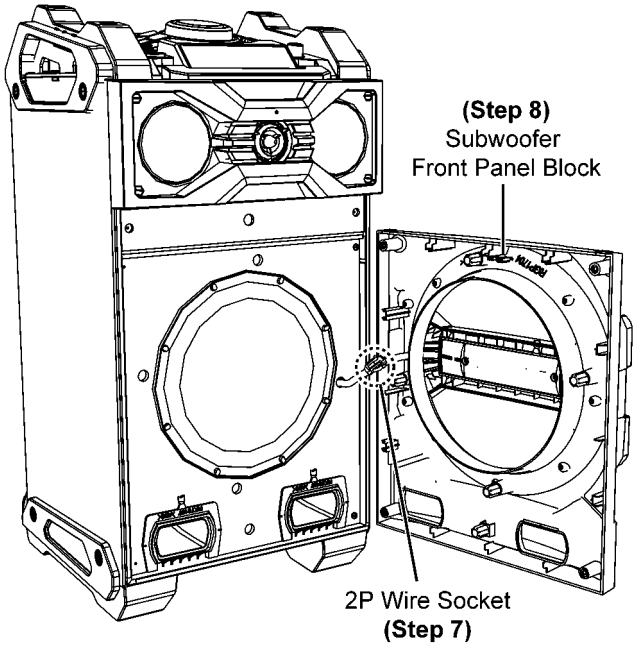

Caution 1 : Scrape off and clean up the remaining glue at the boss and hole.

Caution 2 : During assembling, align the holes of the Bosses with the Subwoofer Front Panel Block and fix it properly.

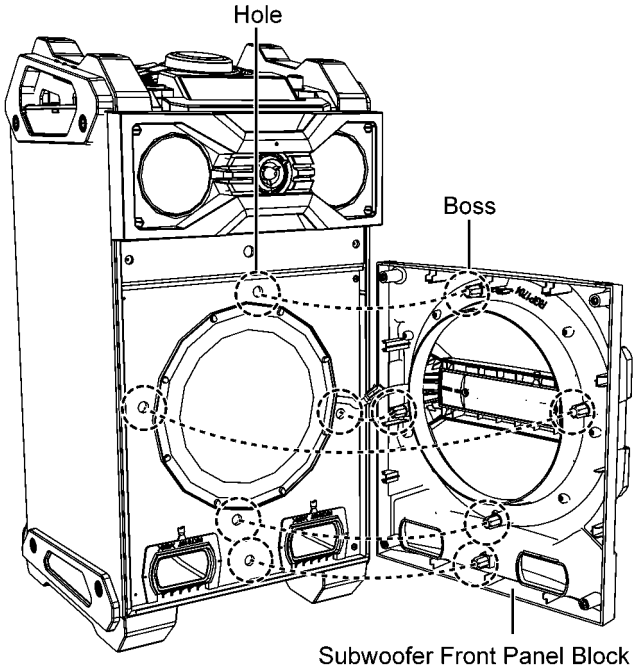

8.18. Disassembly of Woofer Speaker (25cm)

- Refer to “Disassembly of Center Front Panel”
- Refer to “Disassembly of Subwoofer Front Panel Block”

Step 1 : Remove 8 screws.

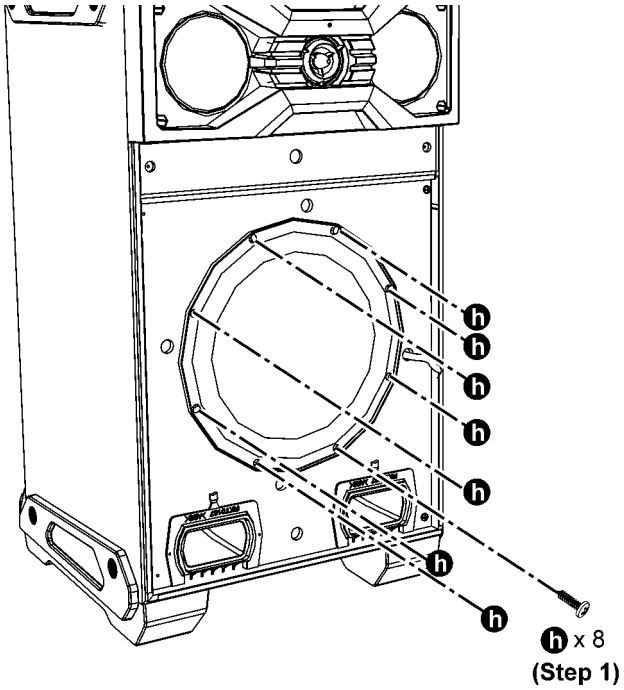

Step 2 : Slightly lift up Woofer Speaker (25cm) as shown.
Step 3 : Detach speaker wire.
Step 4 : Remove Woofer Speaker (25cm).

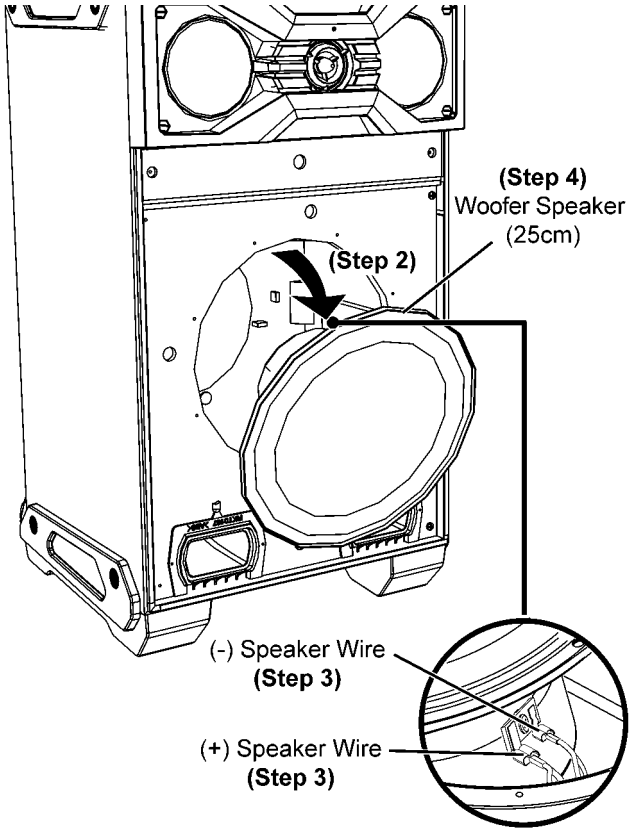

8.19. Disassembly of Lighting Wire P.C.B. Assembly

- Refer to “Disassembly of Center Front Panel”
- Refer to “Disassembly of Subwoofer Front Panel Block”

Step 1 : Remove 2 screws.
Step 2 : Remove P.C.B. Cover.

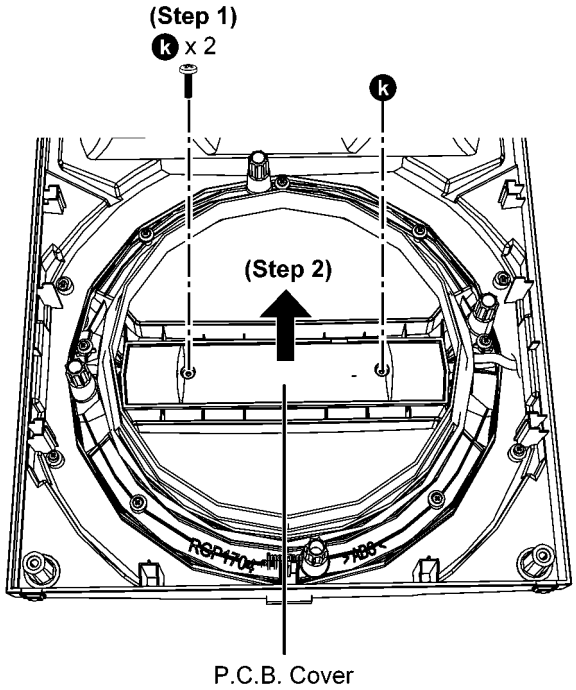

Step 3 : Remove 2 screws.
Step 4 : Release 4P wire from Subwoofer Front Panel Block.
Caution : During assembling, inserted the 4P wire into the opening of Subwoofer Front Panel Block as diagram shown.
Step 5 : Remove Lighting Wire P.C.B. Assembly.

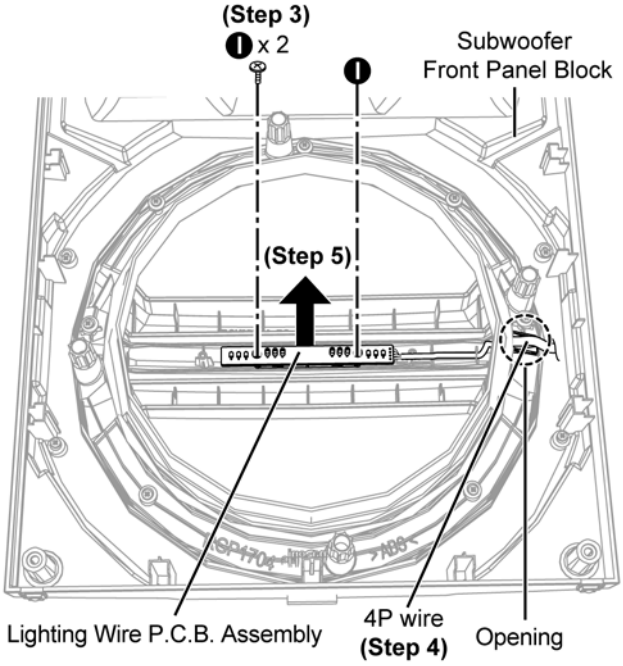

9 Service Position

Note: For description of the disassembly procedures, see the Section 8

9.1. Checking of SMPS Module, Voltage Selector P.C.B. & Main P.C.B. Assembly

Step 1 : Remove Handle Bar Unit.
Step 2 : Remove Rear Panel.
Step 3 : Remove Amp Unit Block.
Step 4 : Remove Main P.C.B. Assembly.
Step 5 : Remove SMPS Module.
Step 6 : Place Main P.C.B. Assembly on Insulated Material.
Step 7 : Remove 4 screws.

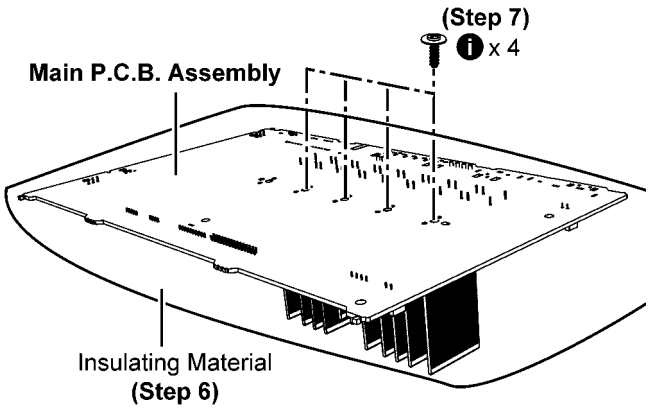

Step 8 : Lift up Main P.C.B. Assembly.

Caution 1: Keep the Heatsink Spacer in safe place. Avoid denting it, place it back during assembling.
Caution 2: Handle the Heatsink & P.C.B. with caution due to it's high temperature after prolonged use. Touching it may lead to injuries

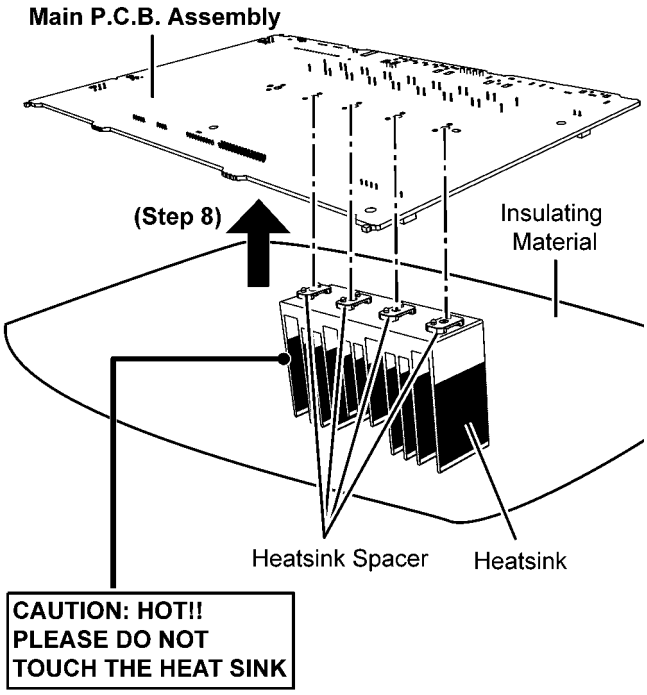

Step 9 : Place Main P.C.B. Assembly on support block.
Step 10 : Connect 4P wire at connector (CN2508) on Main P.C.B. Assembly.
Step 11 : Connect 30P FFC at connector (CN2506) on Main P.C.B. Assembly.
Step 12 : Connect 10P wire at connector (CN2511) on Main P.C.B. Assembly.
Step 13 : Connect 4P wire at connector (CN2510) on Main P.C.B. Assembly.
Step 14 : Connect 6P wire at connector (CN2507) on Main P.C.B. Assembly.
Step 15 : Connect 4P wire at connector (CN2604) on Main P.C.B. Assembly.
Step 16 : Connect 2P wire at connector (JK3503) on Main P.C.B. Assembly.
Step 17 : Connect 4P wire at connector (JK3502) on Main P.C.B. Assembly.

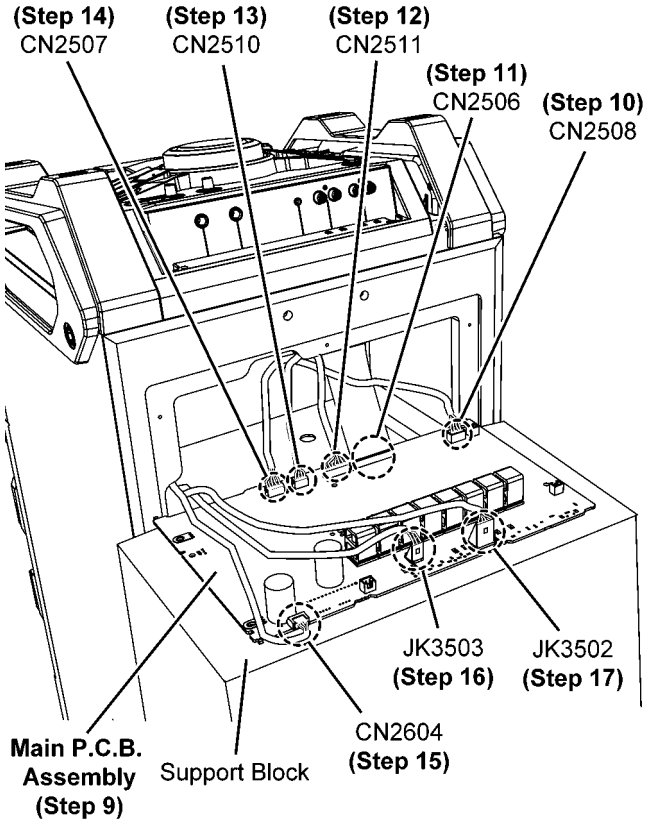

Step 18 : Place SMPS Module on support block.
Step 19 : Connect 13P wire at connector (CN2103) on Main P.C.B. Assembly.

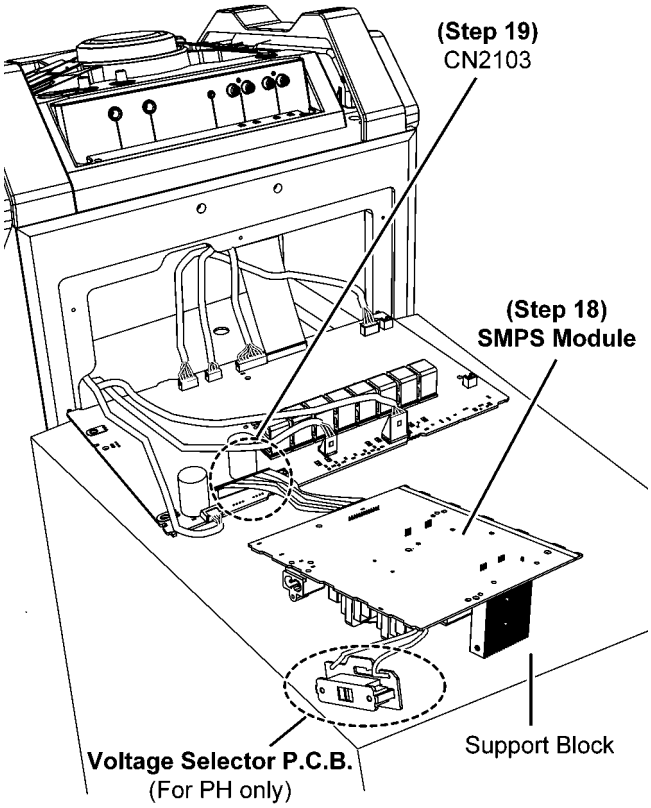

Step 20 : Check SMPS Module, Voltage Selector P.C.B. & Main P.C.B. Assembly according to the diagram shown.

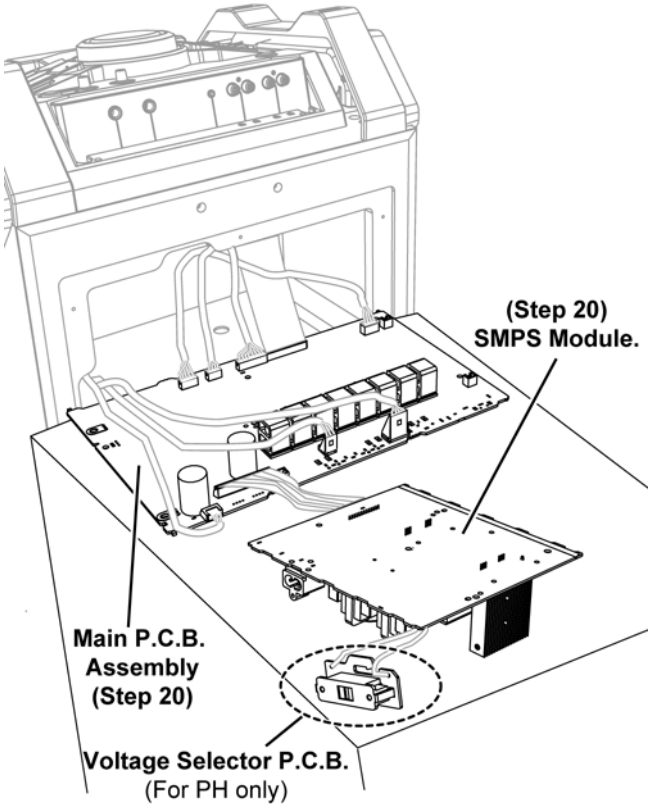

9.2. Checking of Bluetooth P.C.B. Assembly, Panel P.C.B. & FL Display P.C.B.

Step 1 : Remove Handle Bar Unit.
Step 2 : Remove Rear Panel.
Step 3 : Remove Amp Unit Block.
Step 4 : Remove Bluetooth P.C.B. Assembly.
Step 5 : Remove Panel P.C.B..
Step 6 : Remove FL Display P.C.B..
Step 7 : Place Amp Unit Block on support block.
Step 8 : Connect 4P wire at connector (CN2604) on Main P.C.B. Assembly.
Step 9 : Connect 2P wire at connector (JK3503) on Main P.C.B. Assembly.
Step 10 : Connect 4P wire at connector (JK3502) on Main P.C.B. Assembly.

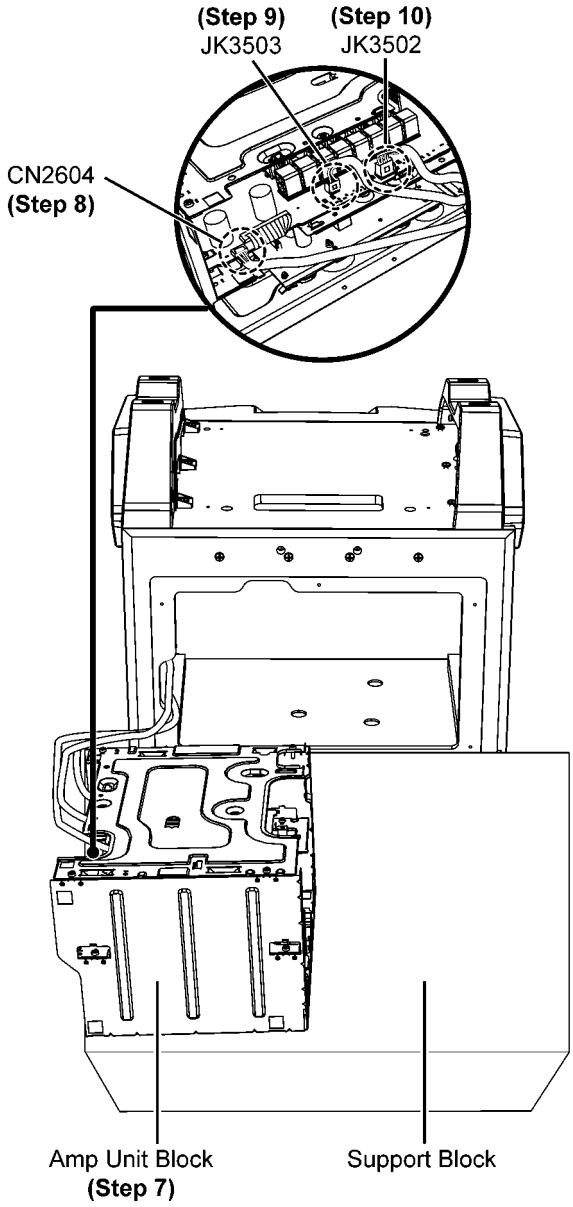

Step 11 : Place Panel P.C.B. on support block.
Step 12 : Connect 4P wire at connector (CN2508) on Main P.C.B. Assembly.
Step 13 : Connect 30P FFC at connector (CN2506) on Main P.C.B. Assembly.
Step 14 : Connect 10P wire at connector (CN2511) on Main P.C.B. Assembly.
Step 15 : Connect 4P wire at connector (CN2510) on Main P.C.B. Assembly.
Step 16 : Connect 6P wire at connector (CN2507) on Main P.C.B. Assembly.
Step 17 : Connect grounding wires.

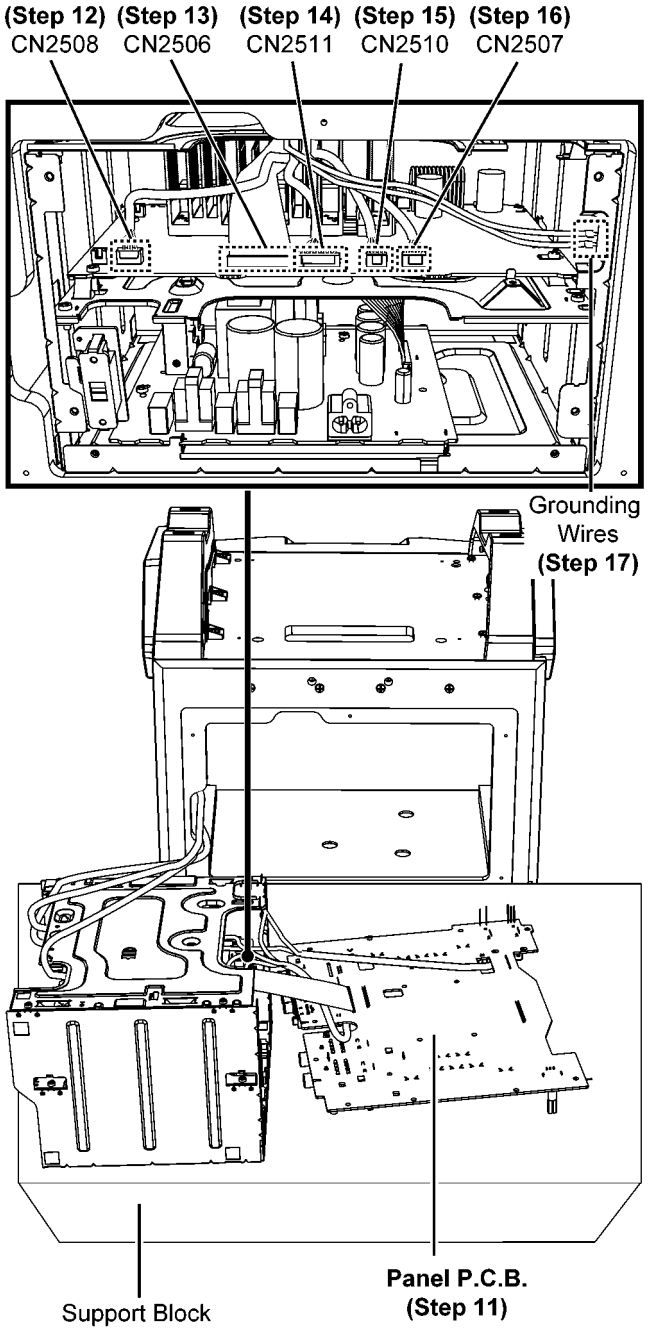

Step 18 : Place FL Display P.C.B. & Bluetooth P.C.B. Assembly on support block.
Step 19 : Connect 12P FFC at connector (P7701) on Bluetooth P.C.B. Assembly.
Step 20 : Connect 30P FFC at connector (CN6005) on Panel P.C.B..

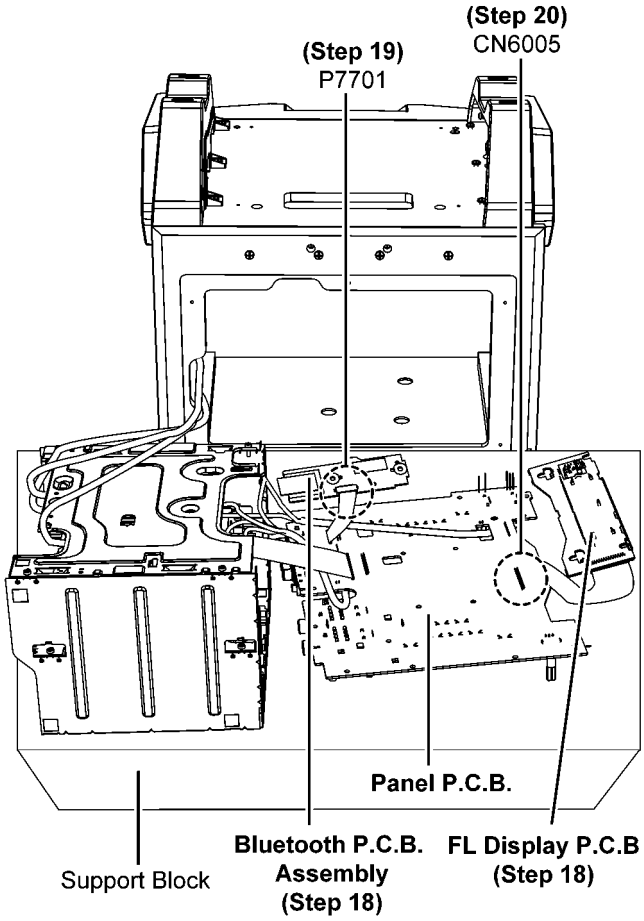

Step 21 : Check Panel P.C.B., Bluetooth P.C.B. Assembly & FL Display P.C.B. according to the diagram shown.

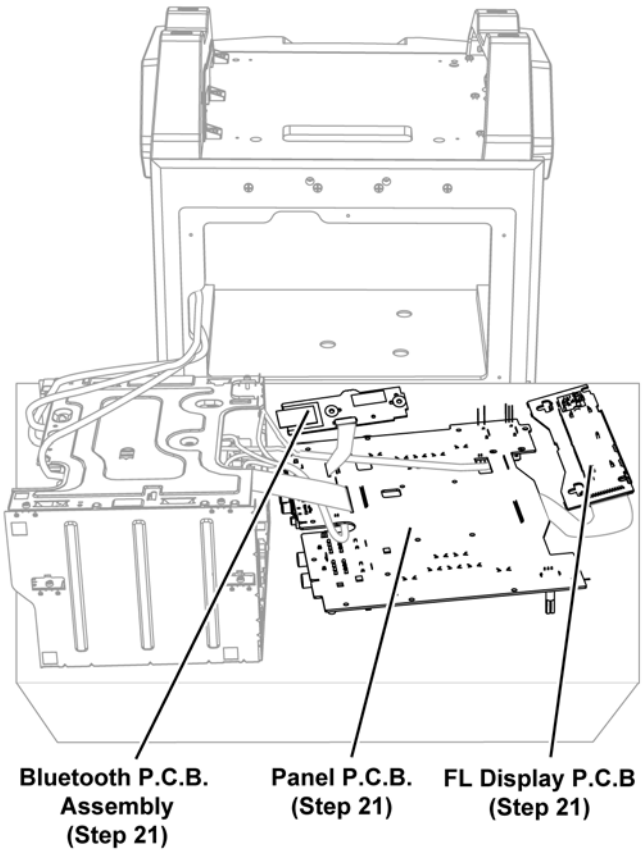

10 Block Diagram

10.1. SYSTEM CONTROL (1/3) BLOCK DIAGRAM

: AUDIO OUTPUT SIGNAL LINE : USB SIGNAL LINE

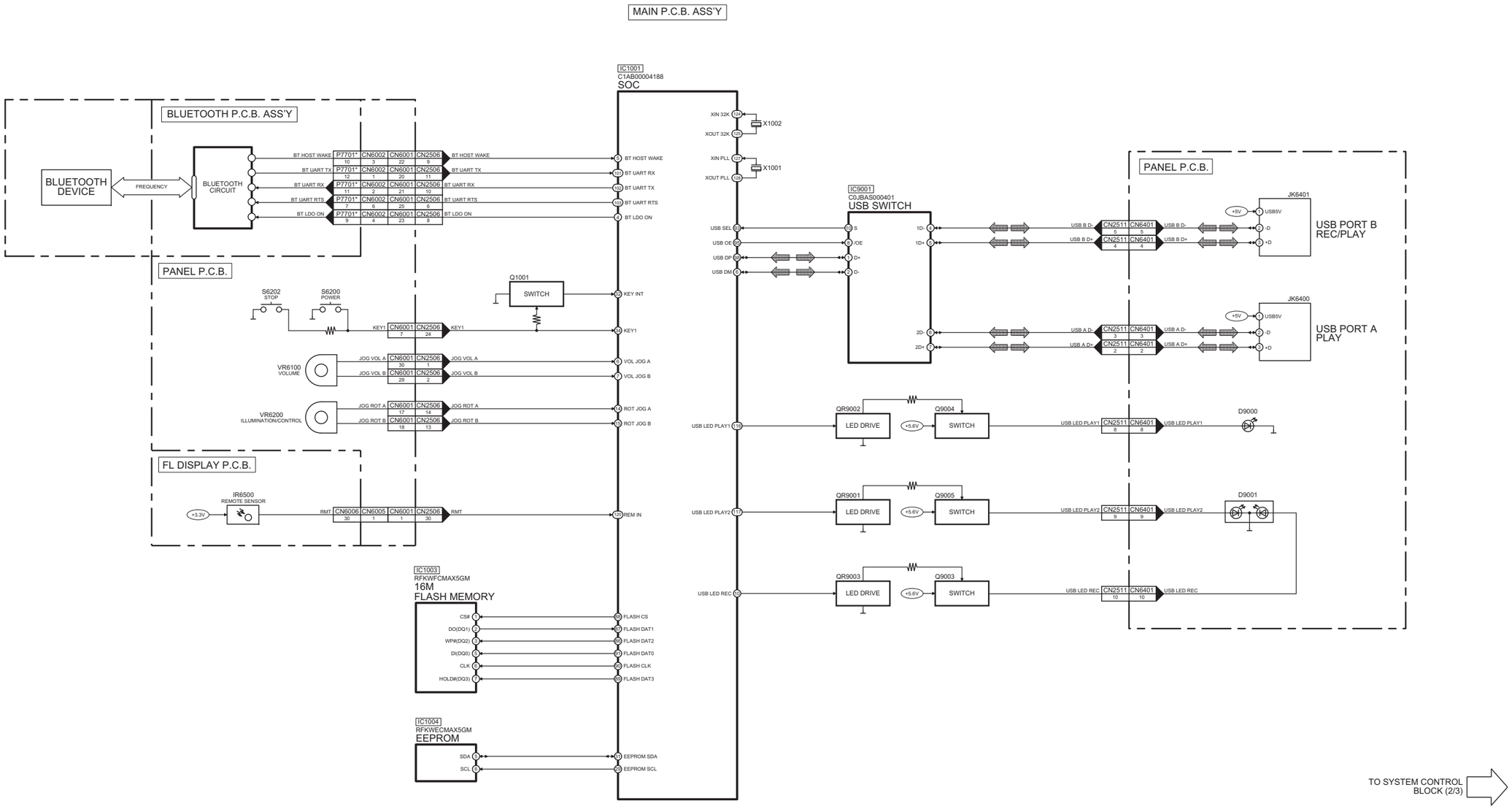

NOTE: " * " REF IS FOR INDICATION ONLY

SC-CMAX5GS/PH/PR SYSTEM CONTROL (1/3) BLOCK DIAGRAM

10.2. SYSTEM CONTROL (2/3) BLOCK DIAGRAM

: AUDIO OUTPUT SIGNAL LINE : USB SIGNAL LINE

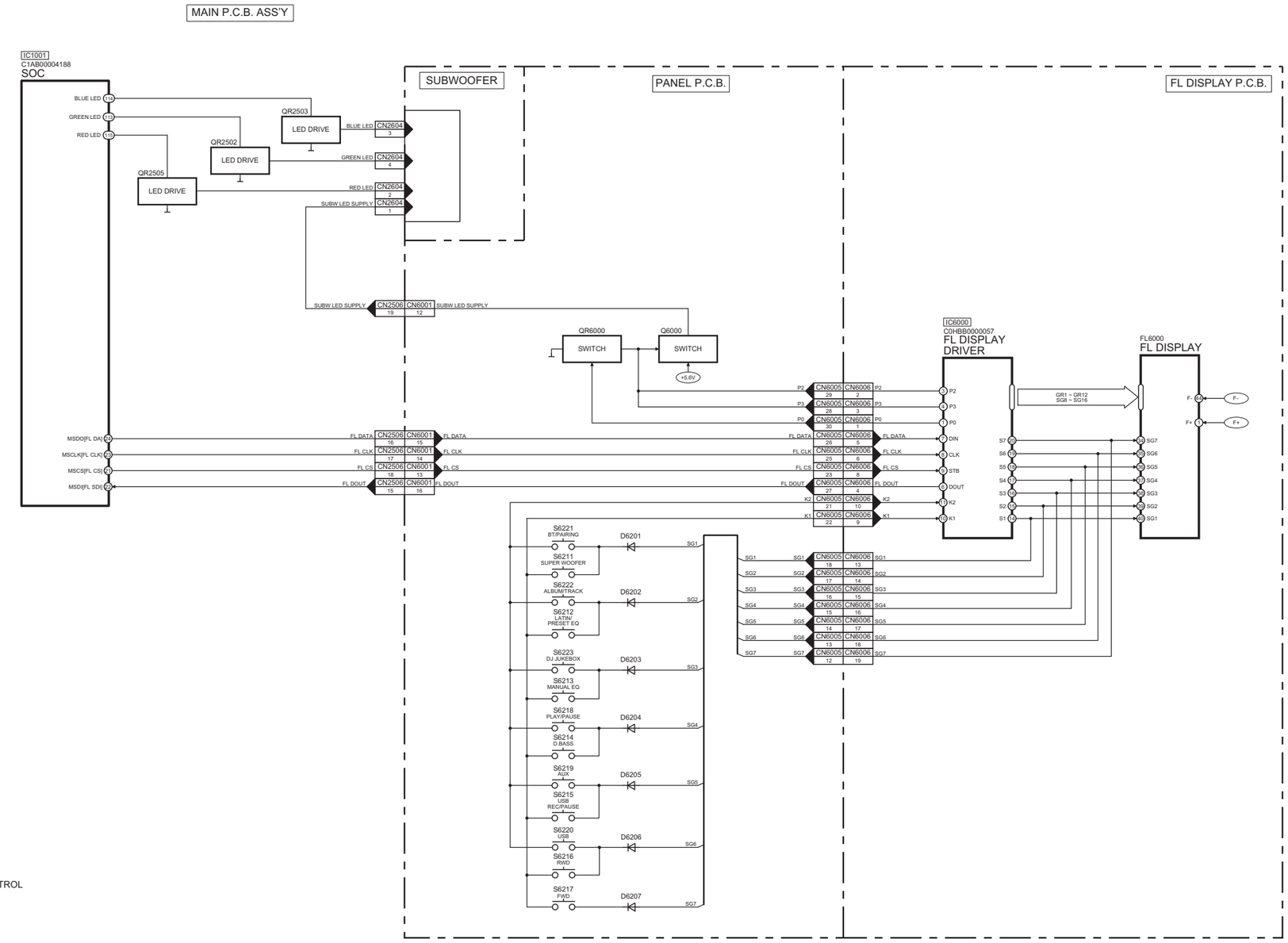

10.3. SYSTEM CONTROL (3/3) BLOCK DIAGRAM

: AUDIO OUTPUT SIGNAL LINE : USB SIGNAL LINE

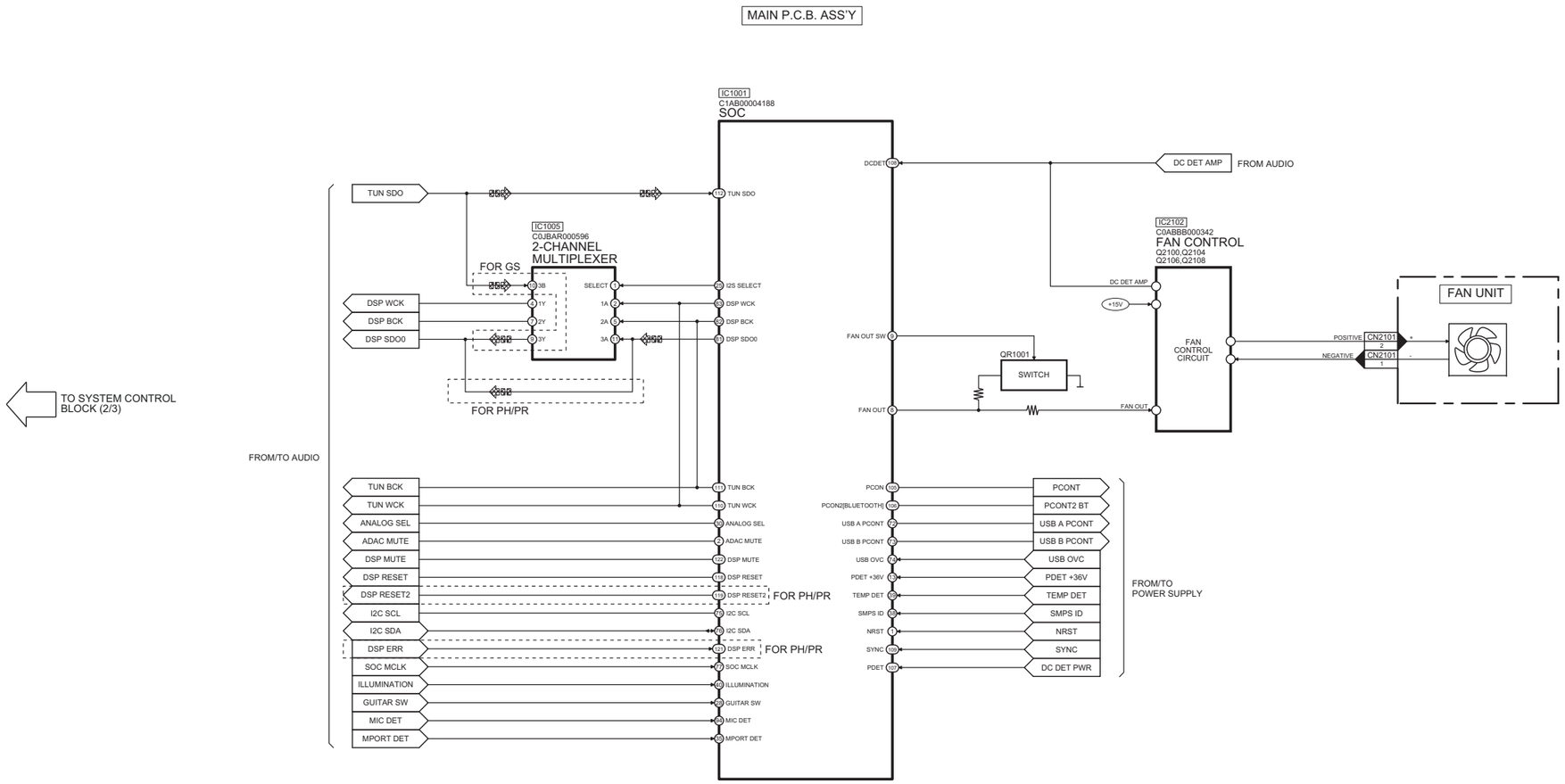

SC-CMAX5GS/PH/PR SYSTEM CONTROL (3/3) BLOCK DIAGRAM

10.4. AUDIO (1/3) BLOCK DIAGRAM

: AUX/MIC/GUITAR AUDIO INPUT SIGNAL LINE : AUDIO OUTPUT SIGNAL LINE

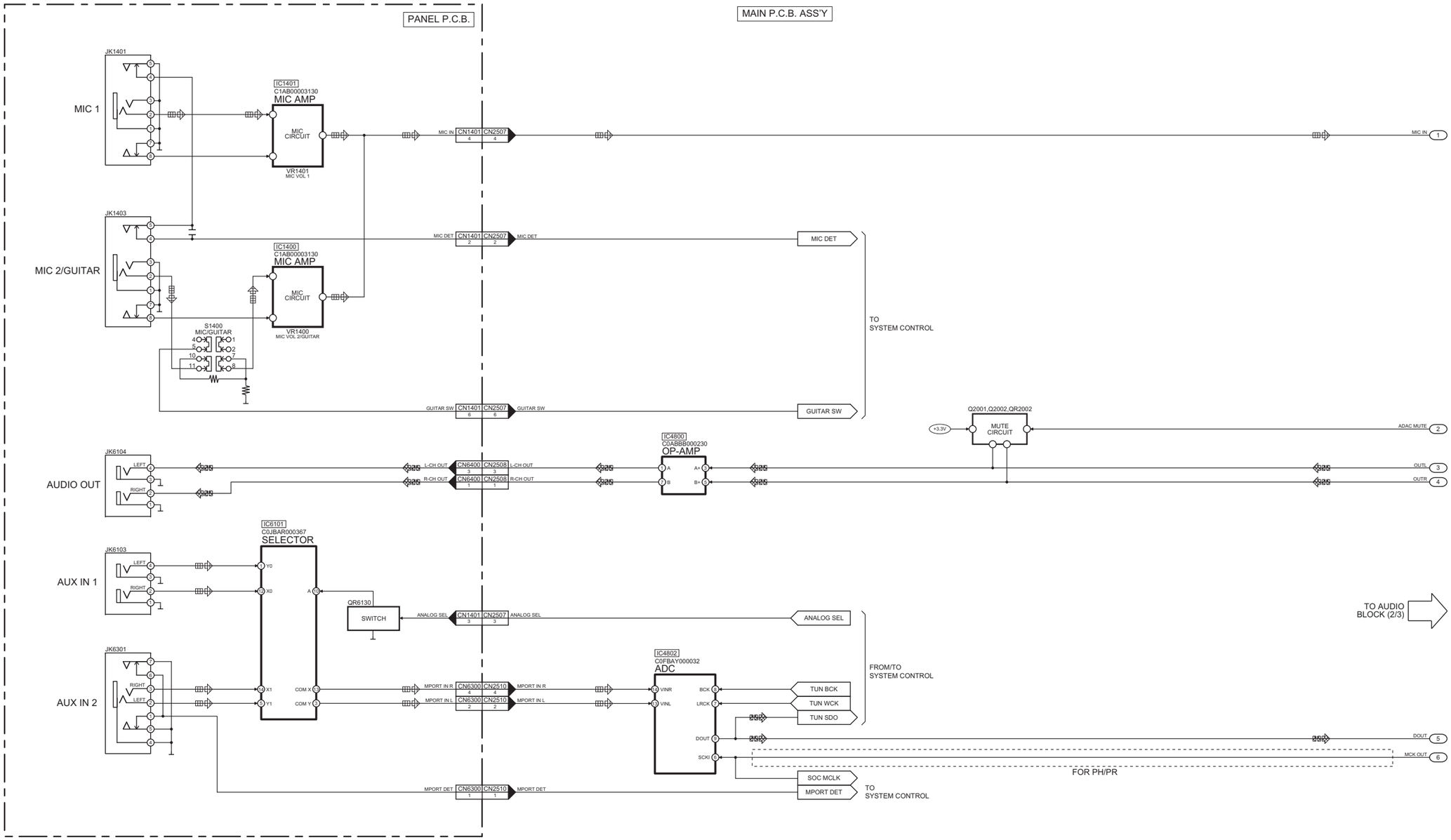

SC-CMAX5GS/PH/PR AUDIO (1/3) BLOCK DIAGRAM

10.5. AUDIO (2/3) BLOCK DIAGRAM

: AUX/MIC/GUITAR AUDIO INPUT SIGNAL LINE : AUDIO OUTPUT SIGNAL LINE

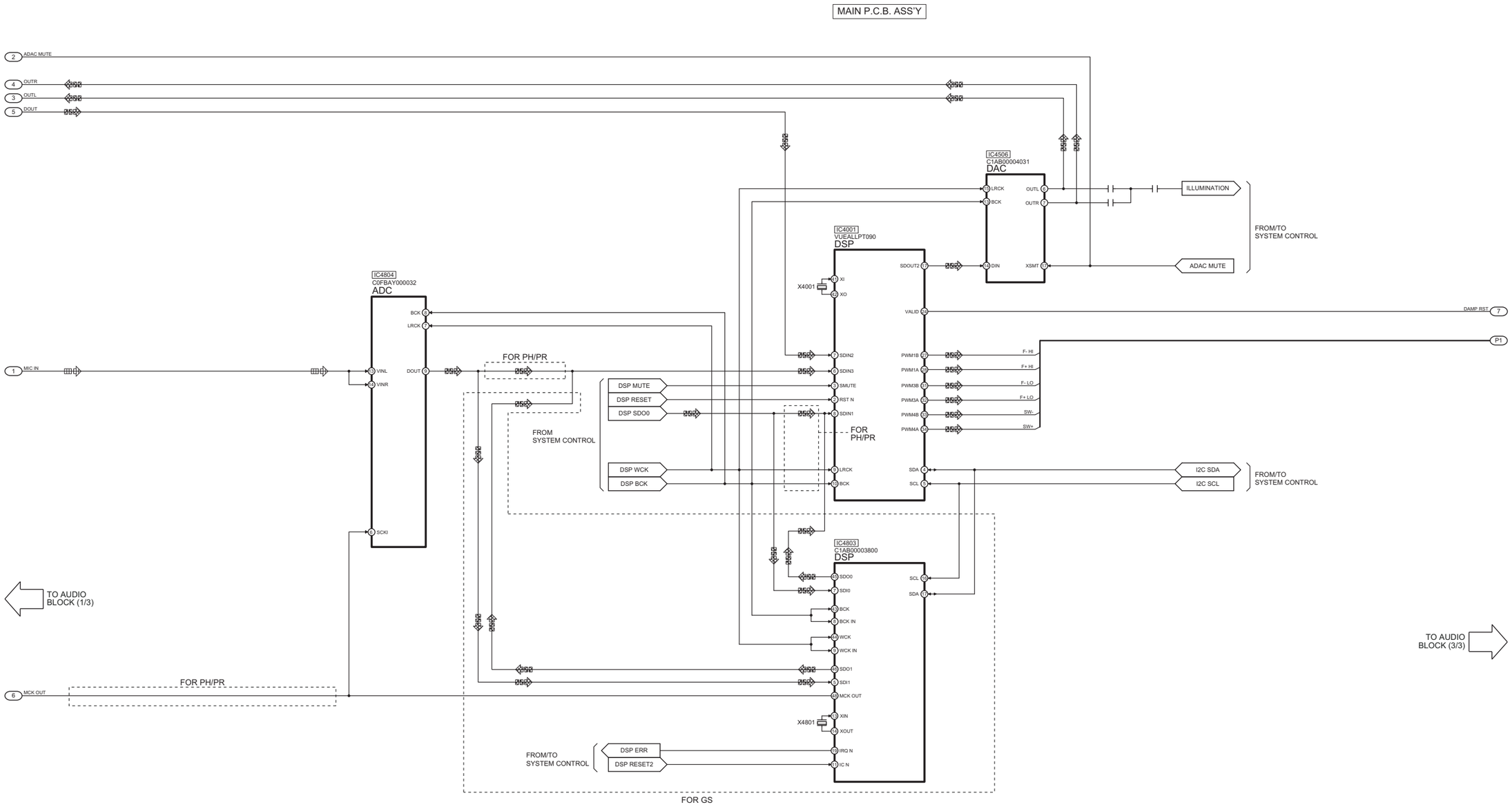

SC-CMAX5GS/PH/PR AUDIO (2/3) BLOCK DIAGRAM

10.6. AUDIO (3/3) BLOCK DIAGRAM

: AUX/MIC/GUITAR AUDIO INPUT SIGNAL LINE : AUDIO OUTPUT SIGNAL LINE

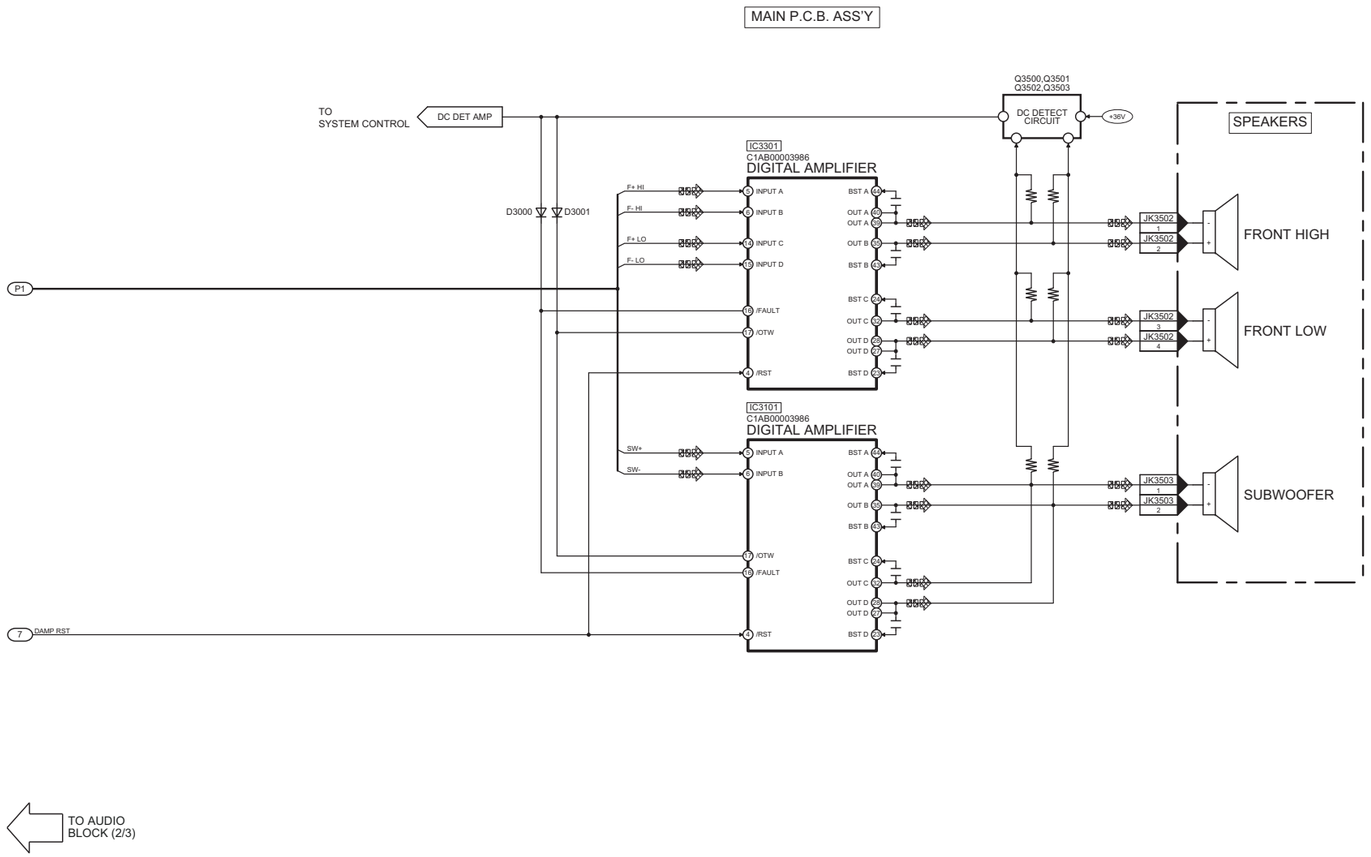

SC-CMAX5GS/PH/PR AUDIO (3/3) BLOCK DIAGRAM

10.7. POWER SUPPLY (1/2) BLOCK DIAGRAM

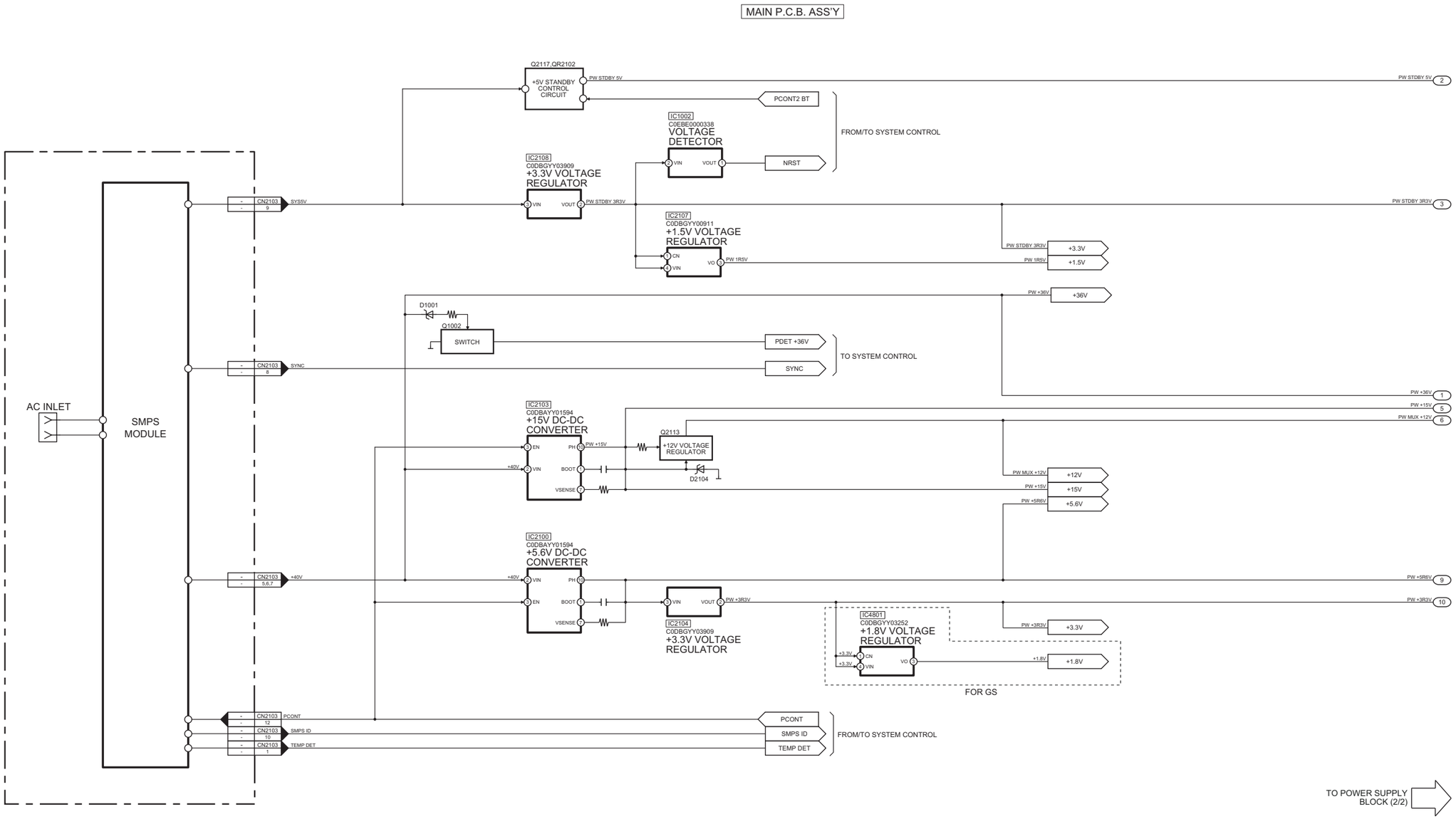

SC-CMAX5GS/PH/PR POWER SUPPLY (1/2) BLOCK DIAGRAM

10.8. POWER SUPPLY (2/2) BLOCK DIAGRAM

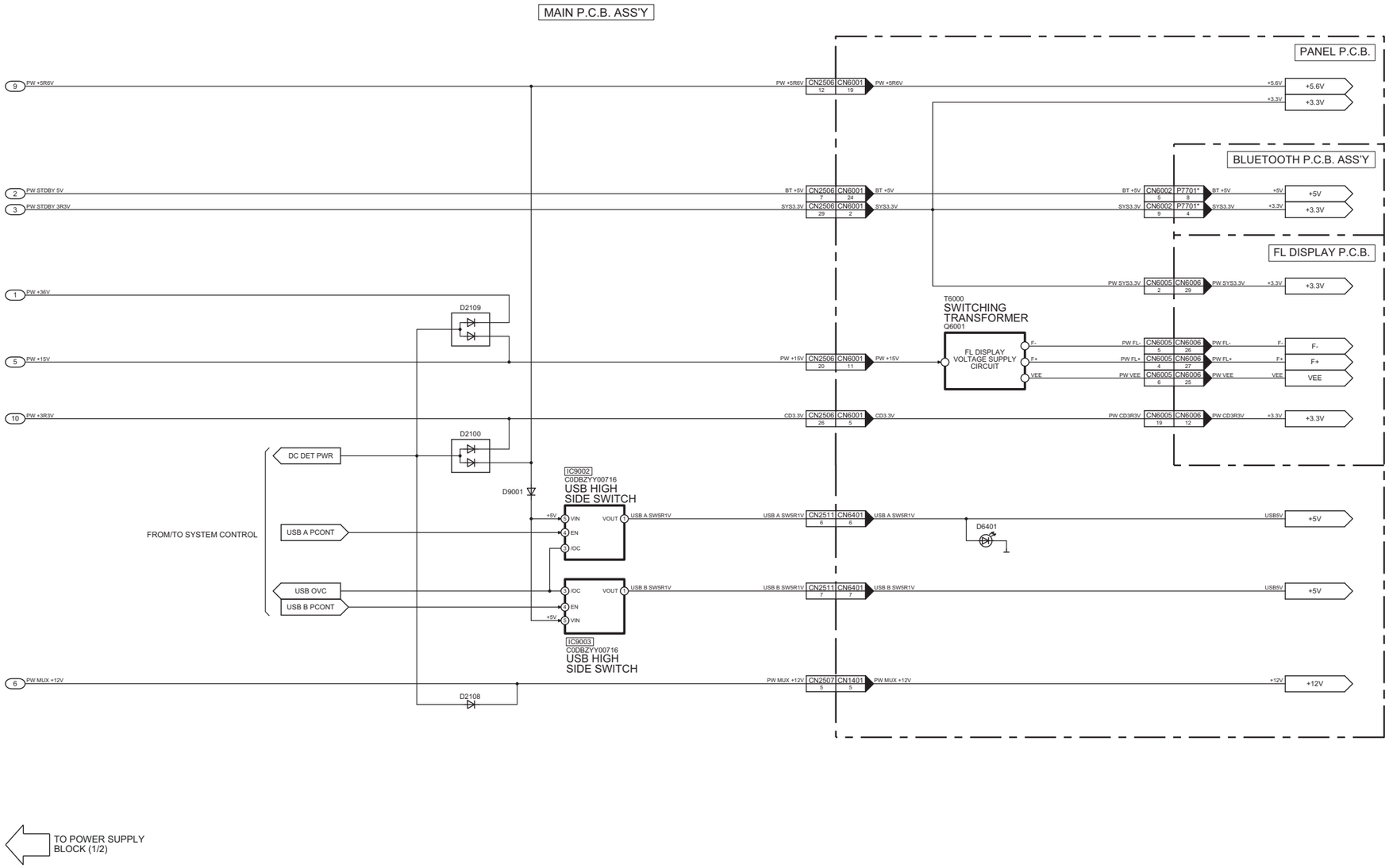

NOTE: " * " REF IS FOR INDICATION ONLY

SC-CMAX5GS/PH/PR POWER SUPPLY (2/2) BLOCK DIAGRAM

11 Wiring Connection Diagram

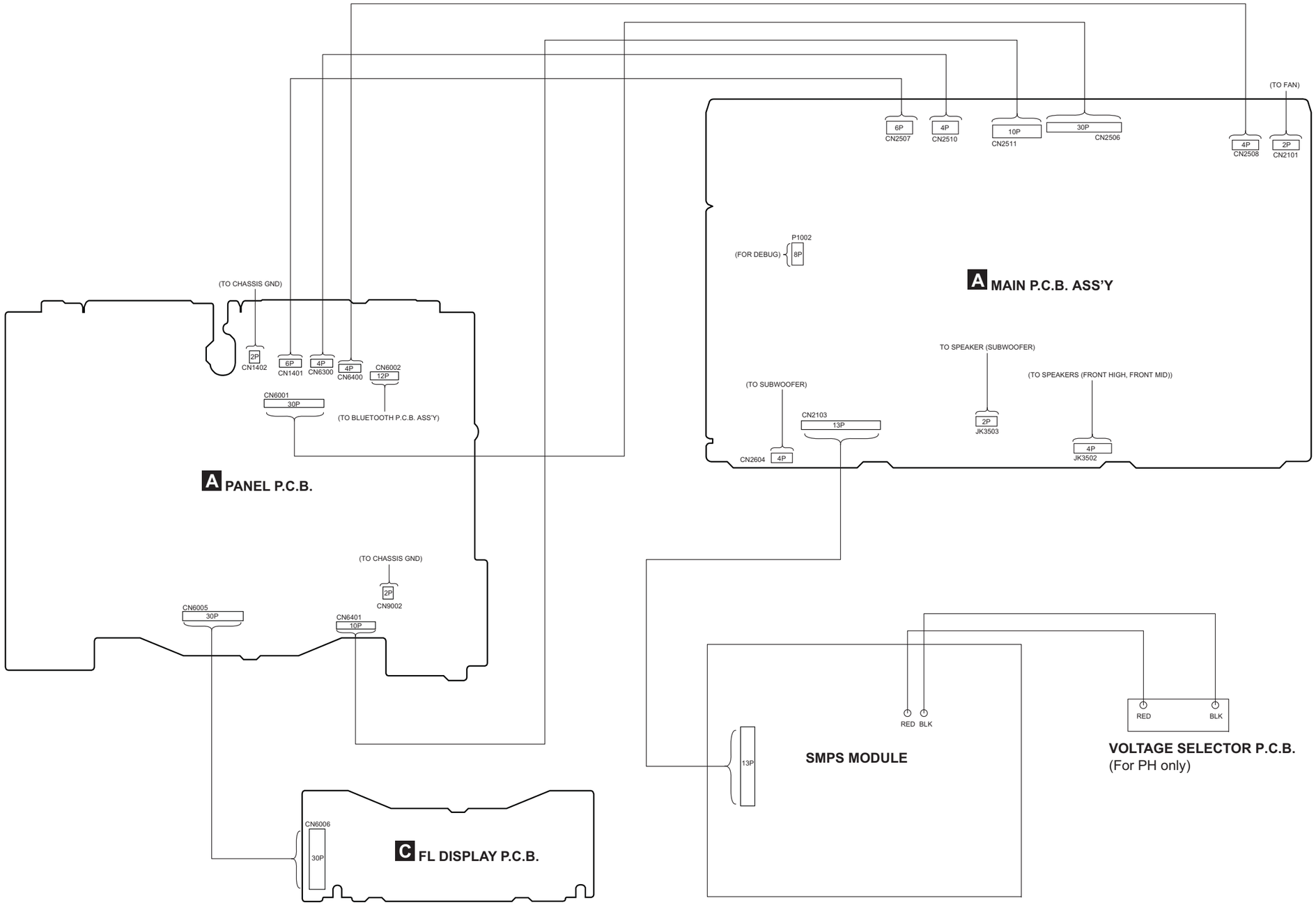

Note : " * " REF IS FOR INDICATION ONLY.

SC-CMAX5GS/PH/PR
WIRING CONNECTION DIAGRAM

12 Schematic Diagram

12.1. Schematic Diagram Notes

(All schematic diagrams may be modified at any time with the development of new technology)

Notes:

S1400:	MIC/GUITAR SWITCH.
S6200:	POWER SWITCH (⏻/I).
S6202:	STOP SWITCH (■).
S6211:	SUPER WOOFER SWITCH.
S6212:	LATIN/PRESET EQ SWITCH.
S6213:	MANUAL EQ SWITCH.
S6214:	D.BASS SWITCH.
S6215:	USB REC/PAUSE SWITCH.
S6216:	RWD SWITCH (⏮/◀◀).
S6217:	FWD SWITCH (▶▶/⏭).
S6218:	PLAY/PAUSE SWITCH (▶/❚❚).
S6219:	AUX SWITCH.
S6220:	USB SWITCH.
S6221:	BT/PAIRING SWITCH ().
S6222:	ALBUM/TRACK SWITCH.
S6223:	DJ JUKEBOX SWITCH.

- Important safety notice:

  Components identified by ⚠ mark have special characteristics important for safety.
  Furthermore, special parts which have purposes of fire-retardant (resistors), high quality sound (capacitors), low-noise (resistors), etc are used.
  When replacing any of components, be sure to use only manufacturer's specified parts shown in the parts list.

- **Resistor**

  Unit of resistance is OHM [Ω] (K=1,000, M=1,000,000).

- **Capacitor**

  Unit of capacitance is μF, unless otherwise noted. F=Farads, pF=pico-Farad.

- **Coil**

  Unit of inductance is H, unless otherwise noted.

- *****

  REF IS FOR INDICATION ONLY.

- Voltage and signal line

	: +B Signal Line
	: -B Signal Line
	: Audio Output Signal Line
	: USB Signal Line
	: Aux/Mic/Guitar Audio Input Signal Line

12.2. MAIN (SOC) CIRCUIT

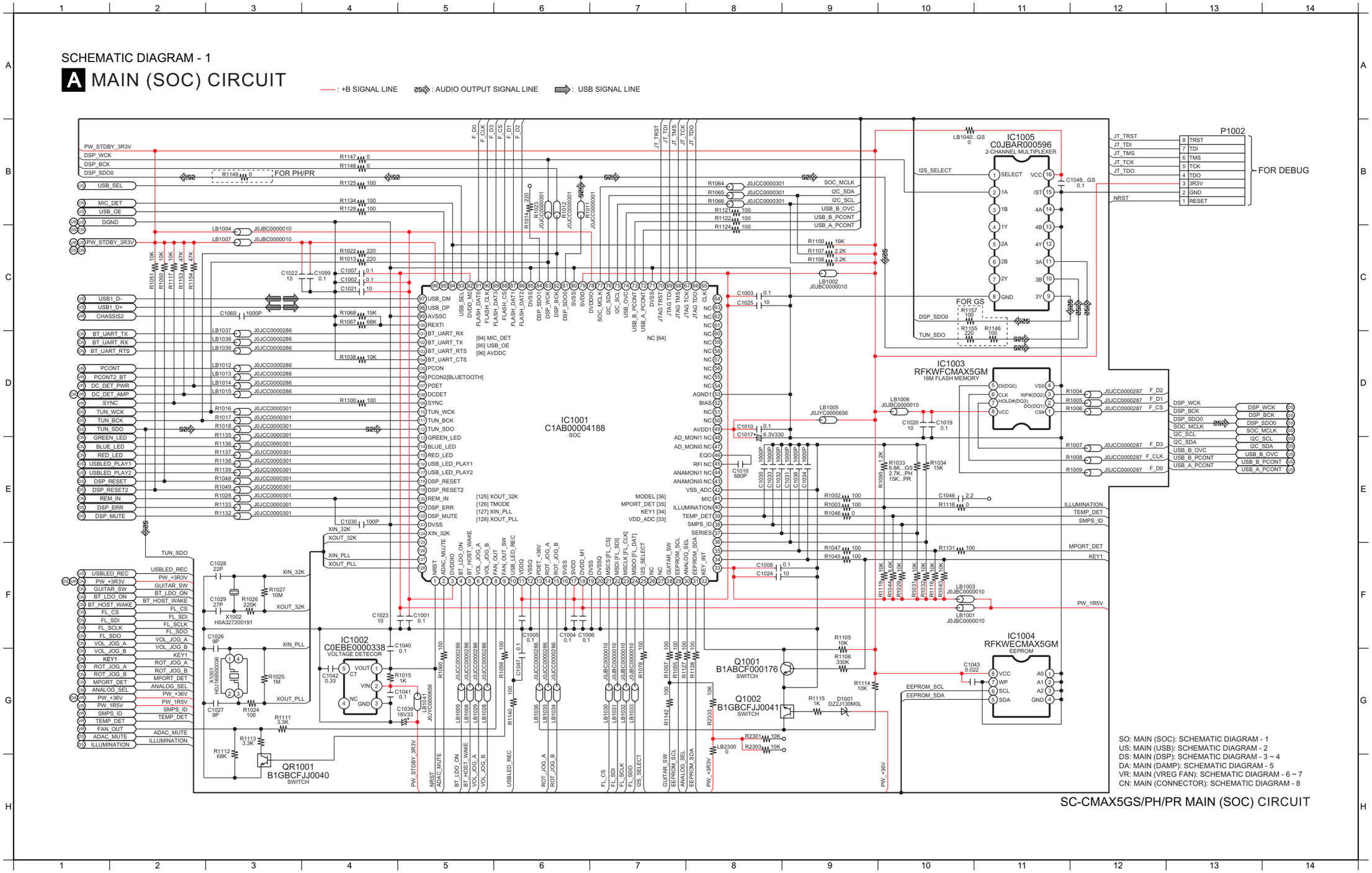

12.3. MAIN (USB) CIRCUIT

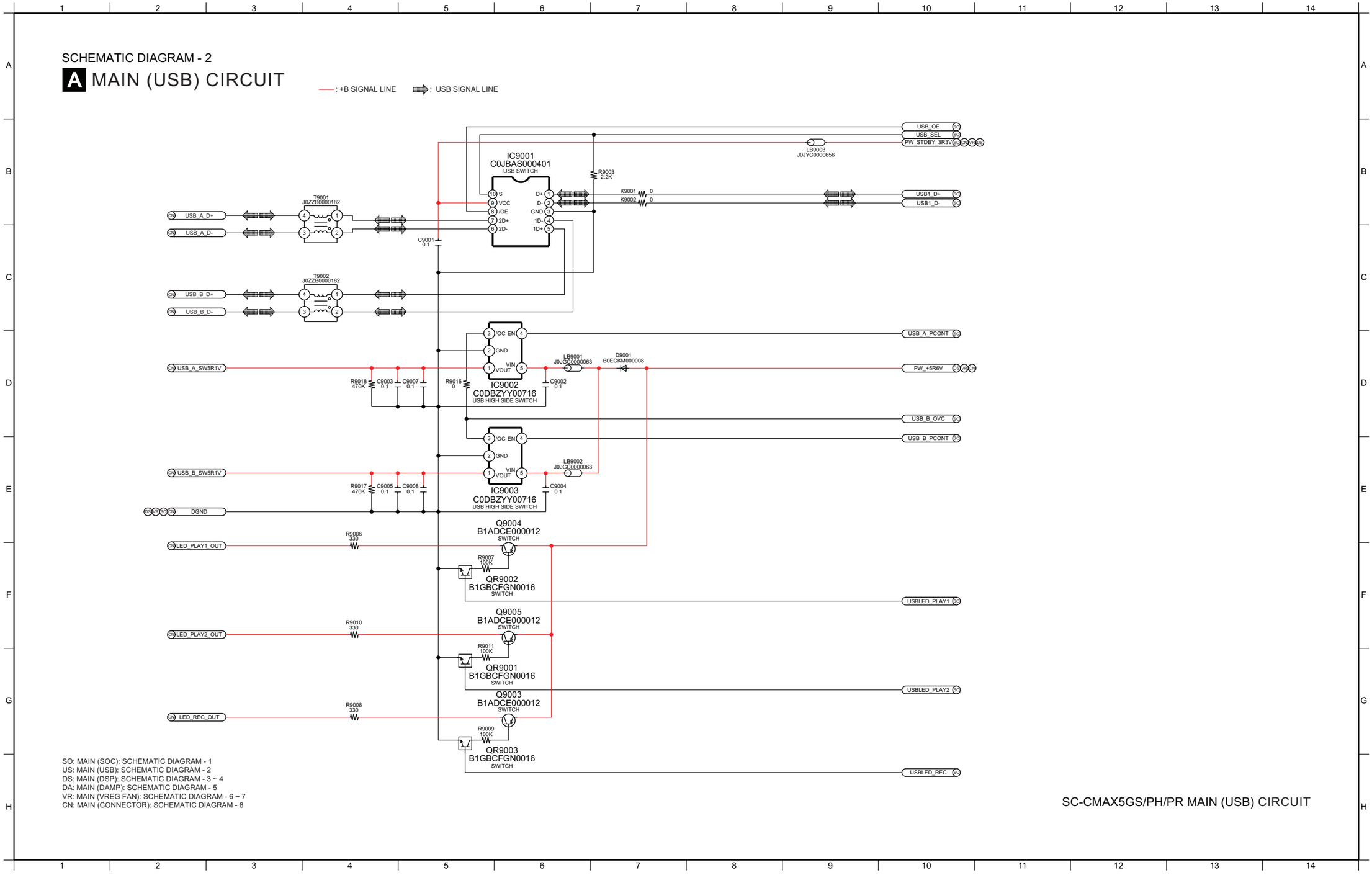

12.4. MAIN (DSP) CIRCUIT (1/2)

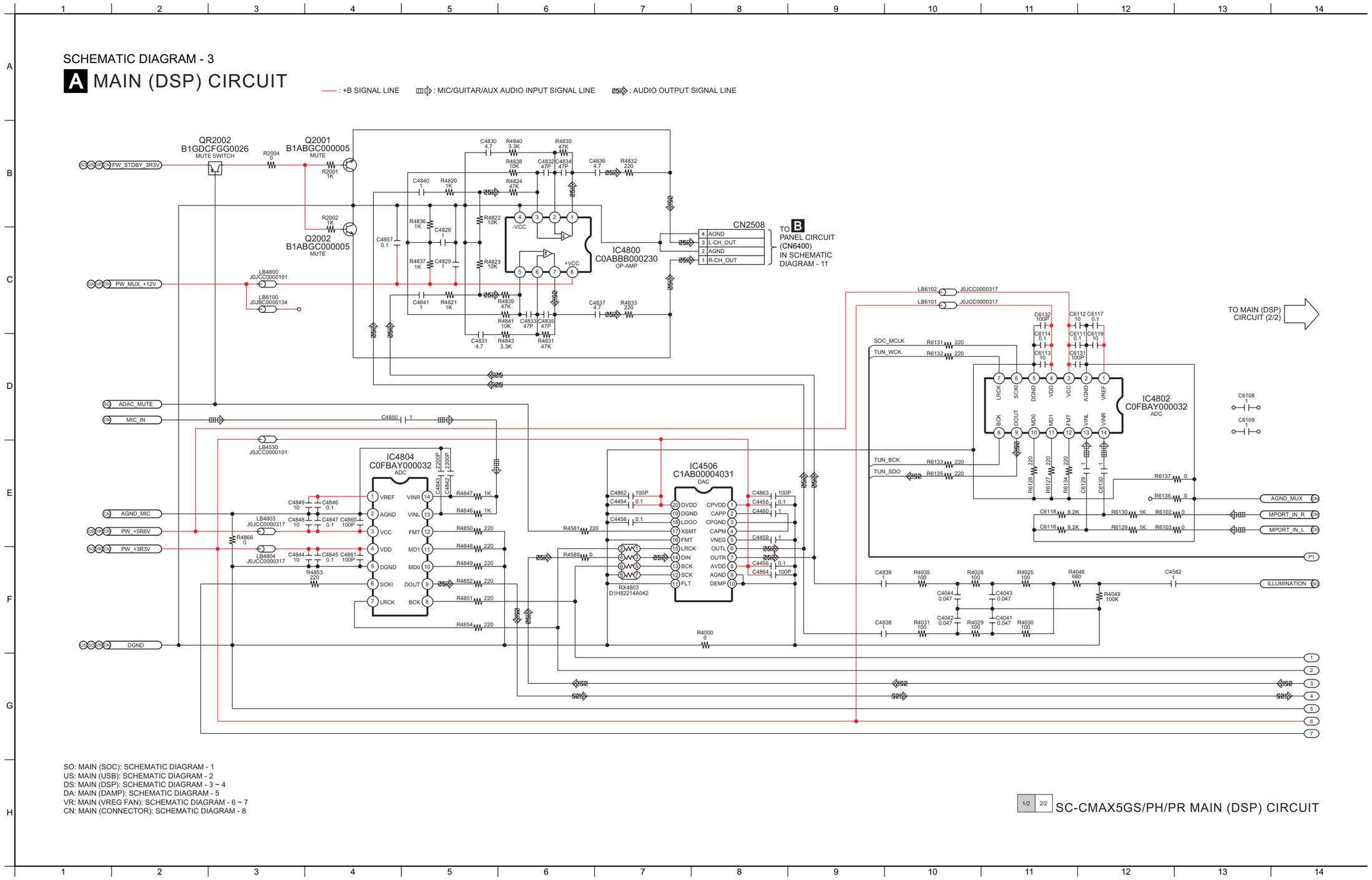

12.5. MAIN (DSP) CIRCUIT (2/2)

SCHEMATIC DIAGRAM - 4

A MAIN (DSP) CIRCUIT

—— : +B SIGNAL LINE : MIC/GUITAR/AUX AUDIO INPUT SIGNAL LINE : AUDIO OUTPUT SIGNAL LINE

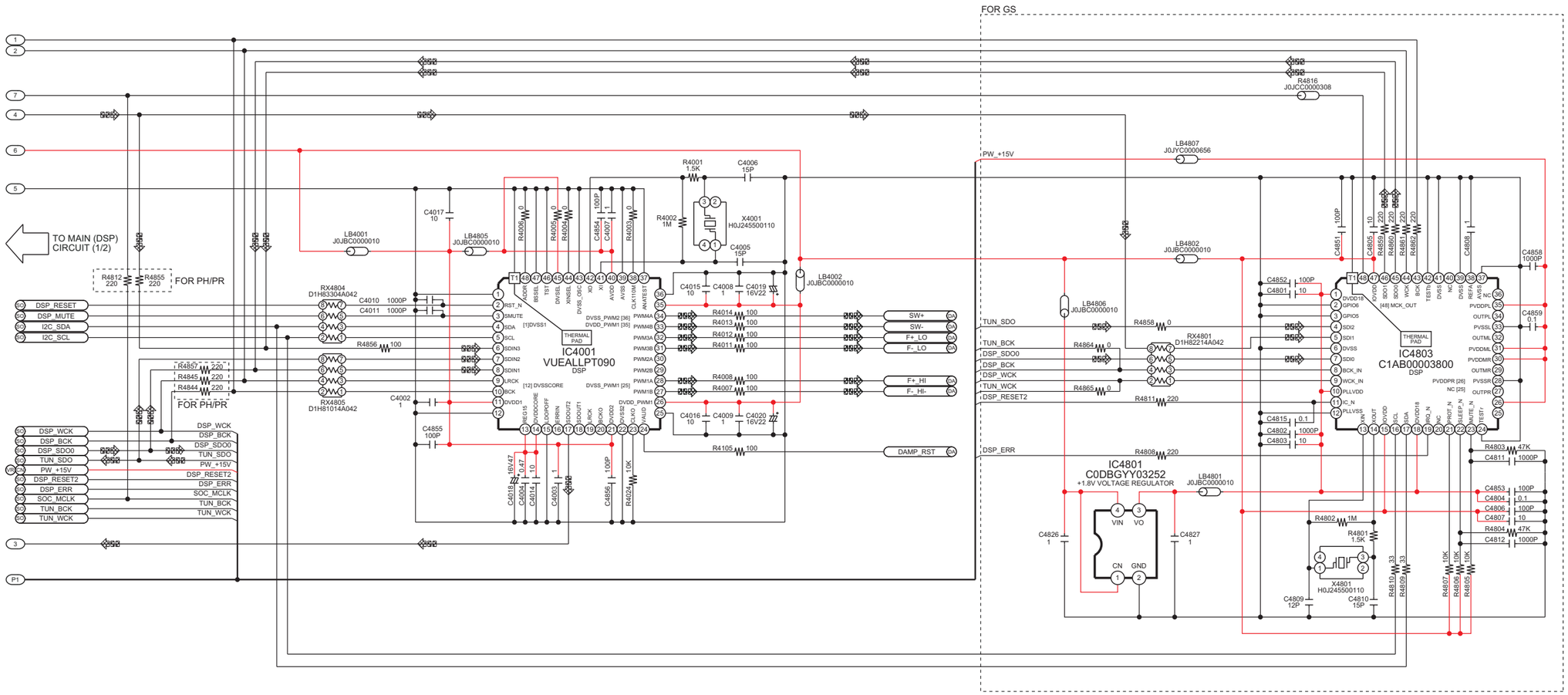

SO: MAIN (SOC): SCHEMATIC DIAGRAM - 1
US: MAIN (USB): SCHEMATIC DIAGRAM - 2
DS: MAIN (DSP): SCHEMATIC DIAGRAM - 3 ~ 4
DA: MAIN (DAMP): SCHEMATIC DIAGRAM - 5
VR: MAIN (VREG FAN): SCHEMATIC DIAGRAM - 6 ~ 7
CN: MAIN (CONNECTOR): SCHEMATIC DIAGRAM - 8

1/2 2/2 SC-CMAX5GS/PH/PR MAIN (DSP) CIRCUIT

12.6. MAIN (DAMP) CIRCUIT

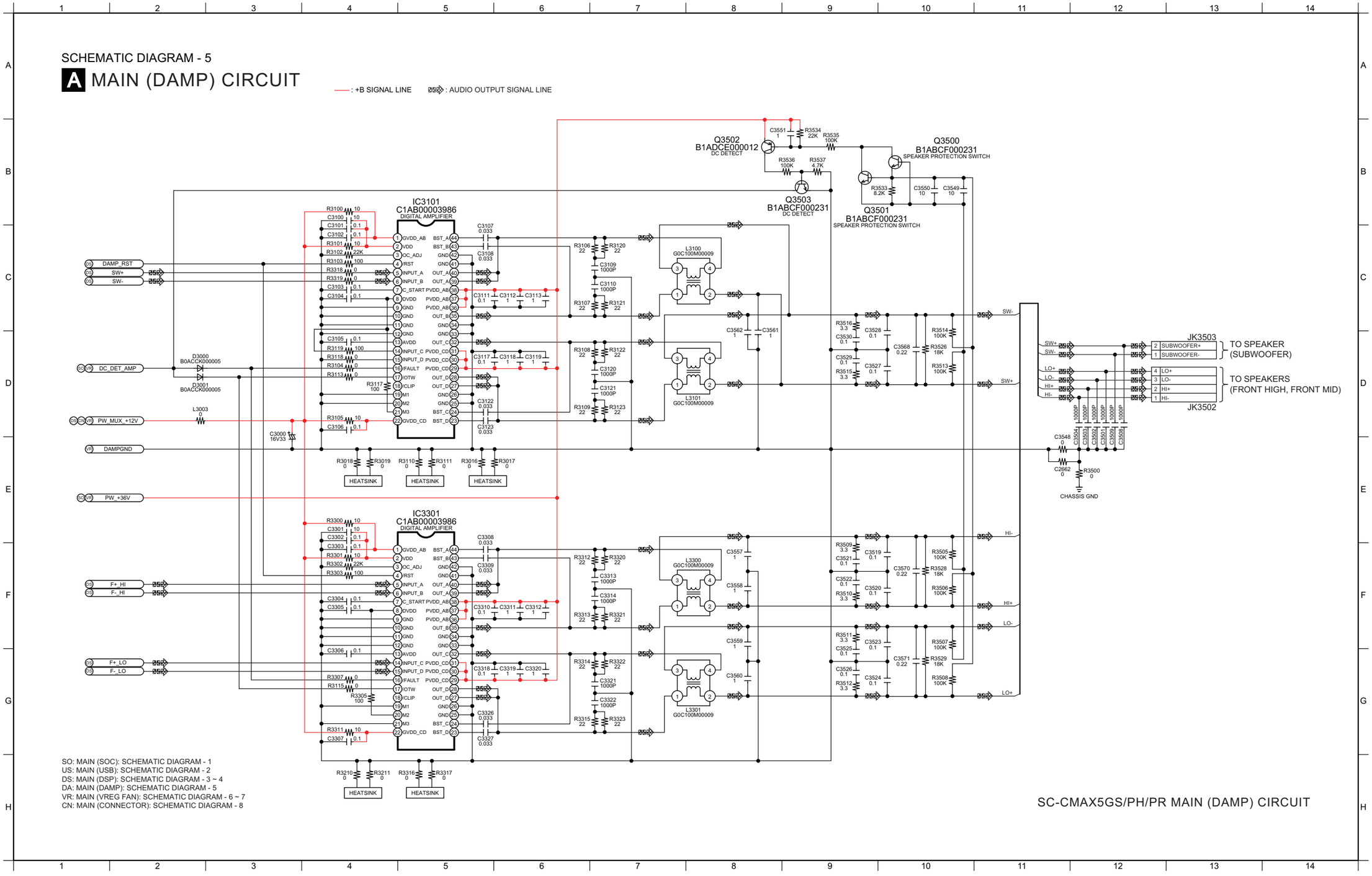

12.7. MAIN (VREG FAN) CIRCUIT (1/2)

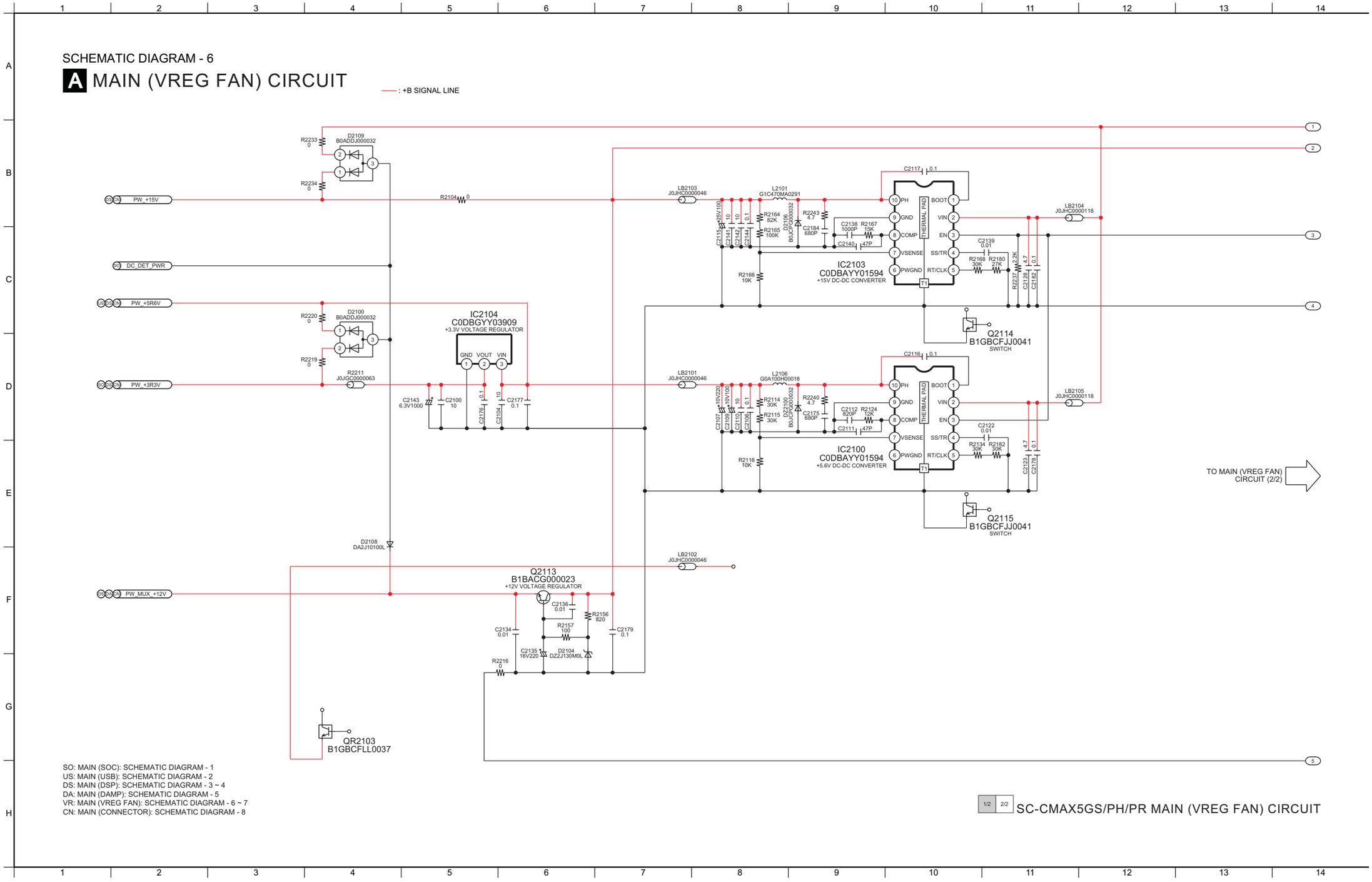

12.8. MAIN (VREG FAN) CIRCUIT (2/2)

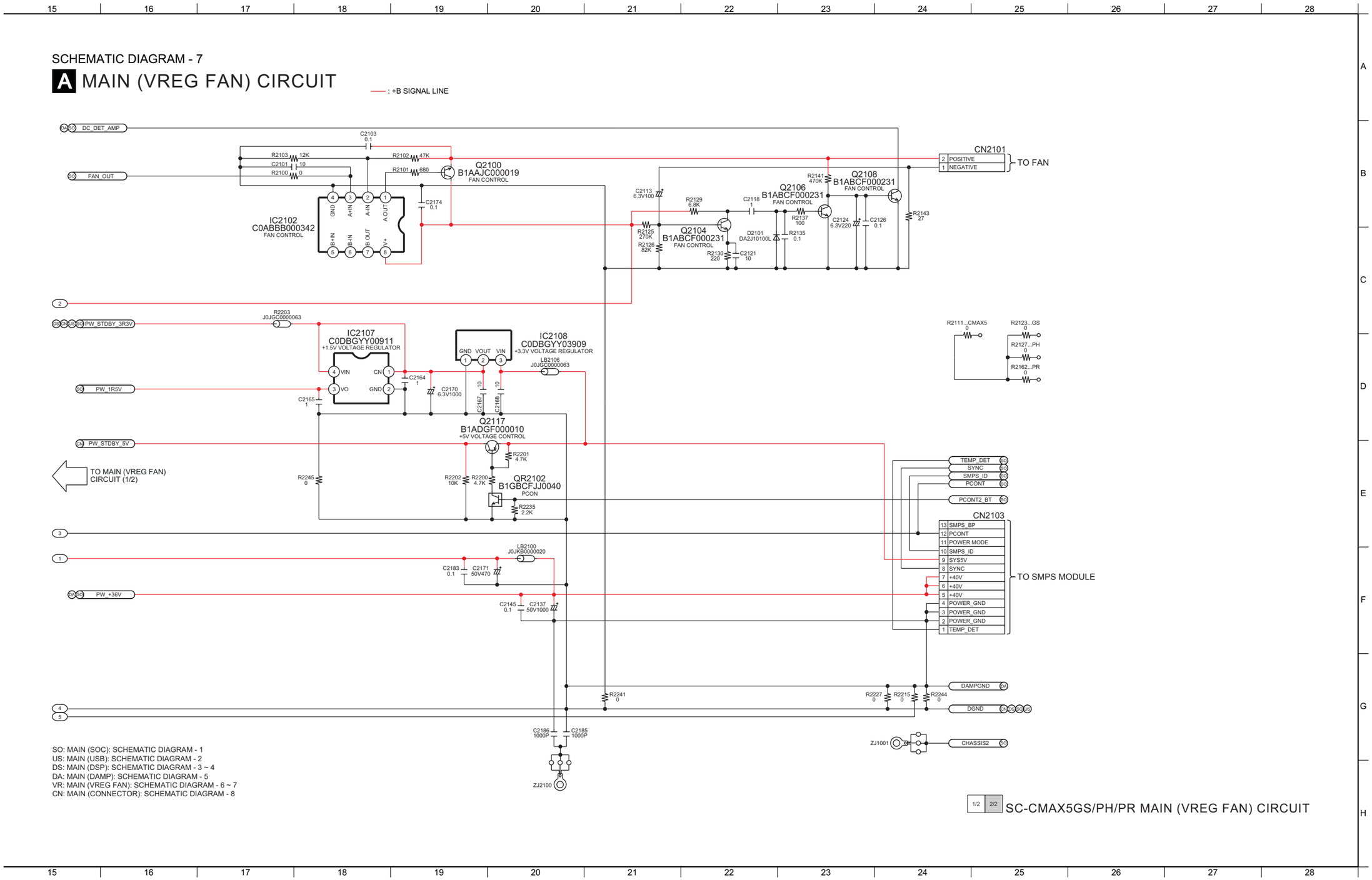

12.9. MAIN (CONNECTOR) CIRCUIT

SCHEMATIC DIAGRAM - 8

A MAIN (CONNECTOR) CIRCUIT

: +B SIGNAL LINE : AUX/MIC/GUITAR AUDIO INPUT SIGNAL LINE : USB SIGNAL LINE

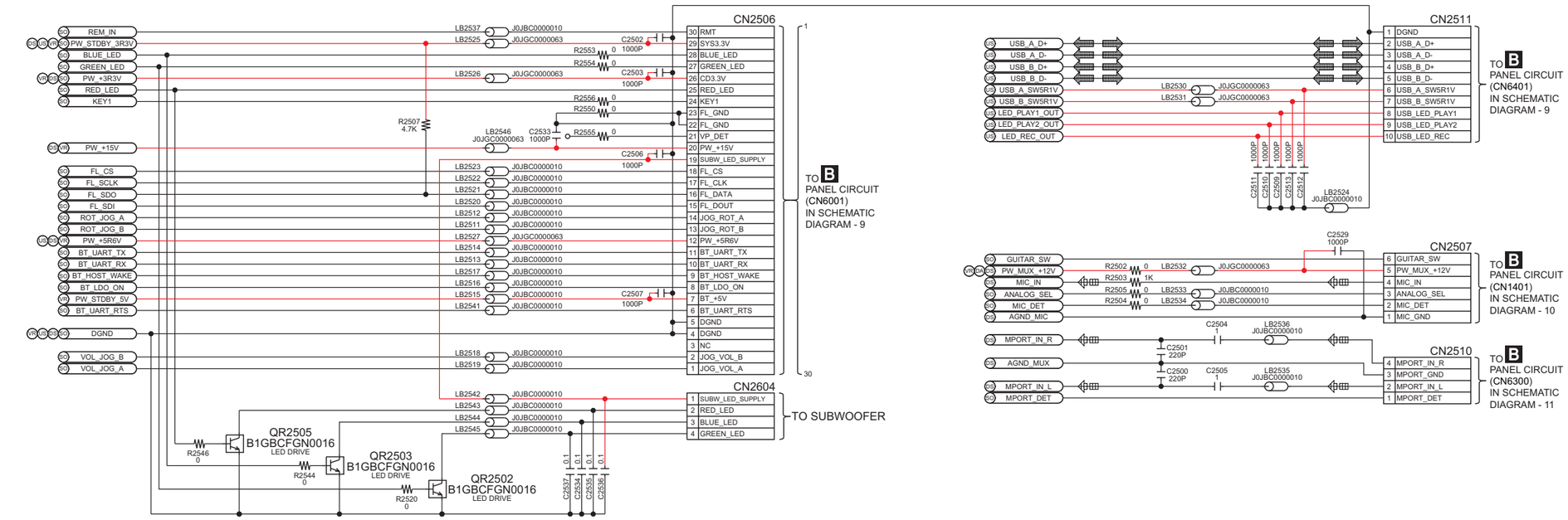

SO: MAIN (SOC): SCHEMATIC DIAGRAM - 1
US: MAIN (USB): SCHEMATIC DIAGRAM - 2
DS: MAIN (DSP): SCHEMATIC DIAGRAM - 3 ~ 4
DA: MAIN (DAMP): SCHEMATIC DIAGRAM - 5
VR: MAIN (VREG FAN): SCHEMATIC DIAGRAM - 6 ~ 7
CN: MAIN (CONNECTOR): SCHEMATIC DIAGRAM - 8

SC-CMAX5GS/PH/PR MAIN (CONNECTOR) CIRCUIT

12.10. PANEL CIRCUIT (1/3)

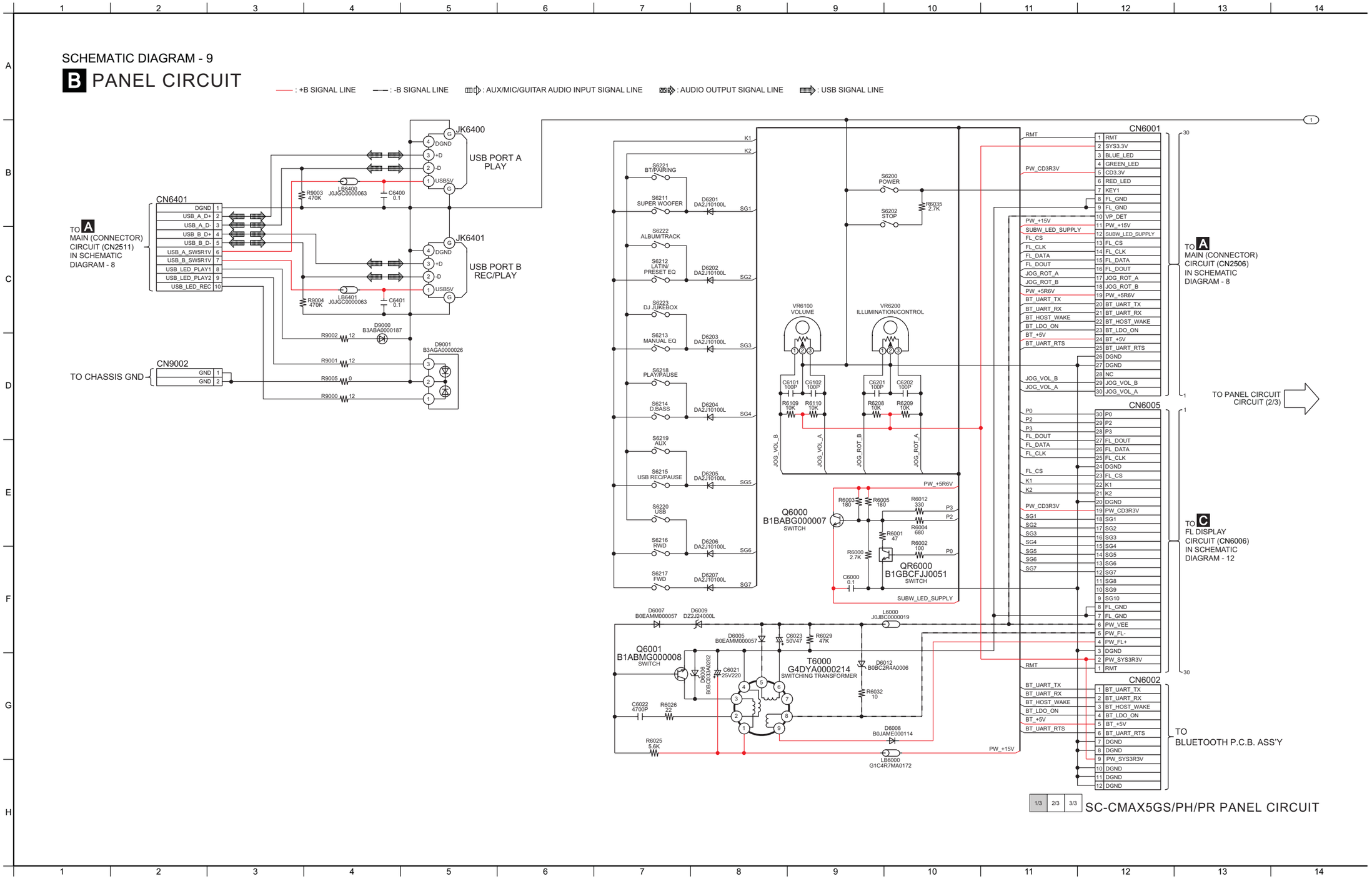

12.11. PANEL CIRCUIT (2/3)

15 16 17 18 19 20 21 22 23 24 25 26 27 28

SCHEMATIC DIAGRAM - 10

B PANEL CIRCUIT

: +B SIGNAL LINE : -B SIGNAL LINE : AUX/MIC/GUITAR AUDIO INPUT SIGNAL LINE : AUDIO OUTPUT SIGNAL LINE : USB SIGNAL LINE

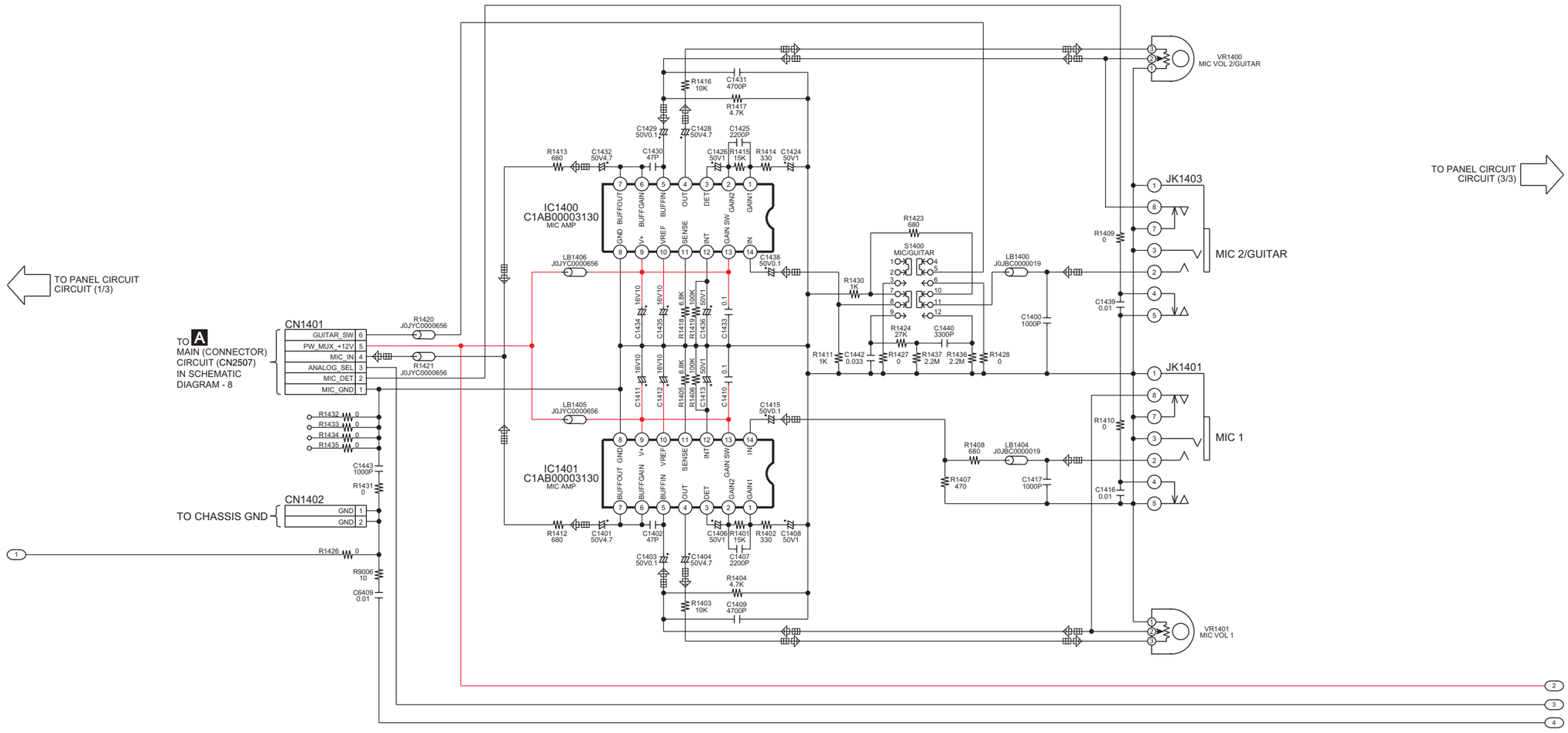

1/3 2/3 3/3 SC-CMAX5GS/PH/PR PANEL CIRCUIT

15 16 17 18 19 20 21 22 23 24 25 26 27 28

12.12. PANEL CIRCUIT (3/3)

SCHEMATIC DIAGRAM - 11

B PANEL CIRCUIT

—— : +B SIGNAL LINE —·— : -B SIGNAL LINE : AUX/MIC/GUITAR AUDIO INPUT SIGNAL LINE : AUDIO OUTPUT SIGNAL LINE : USB SIGNAL LINE

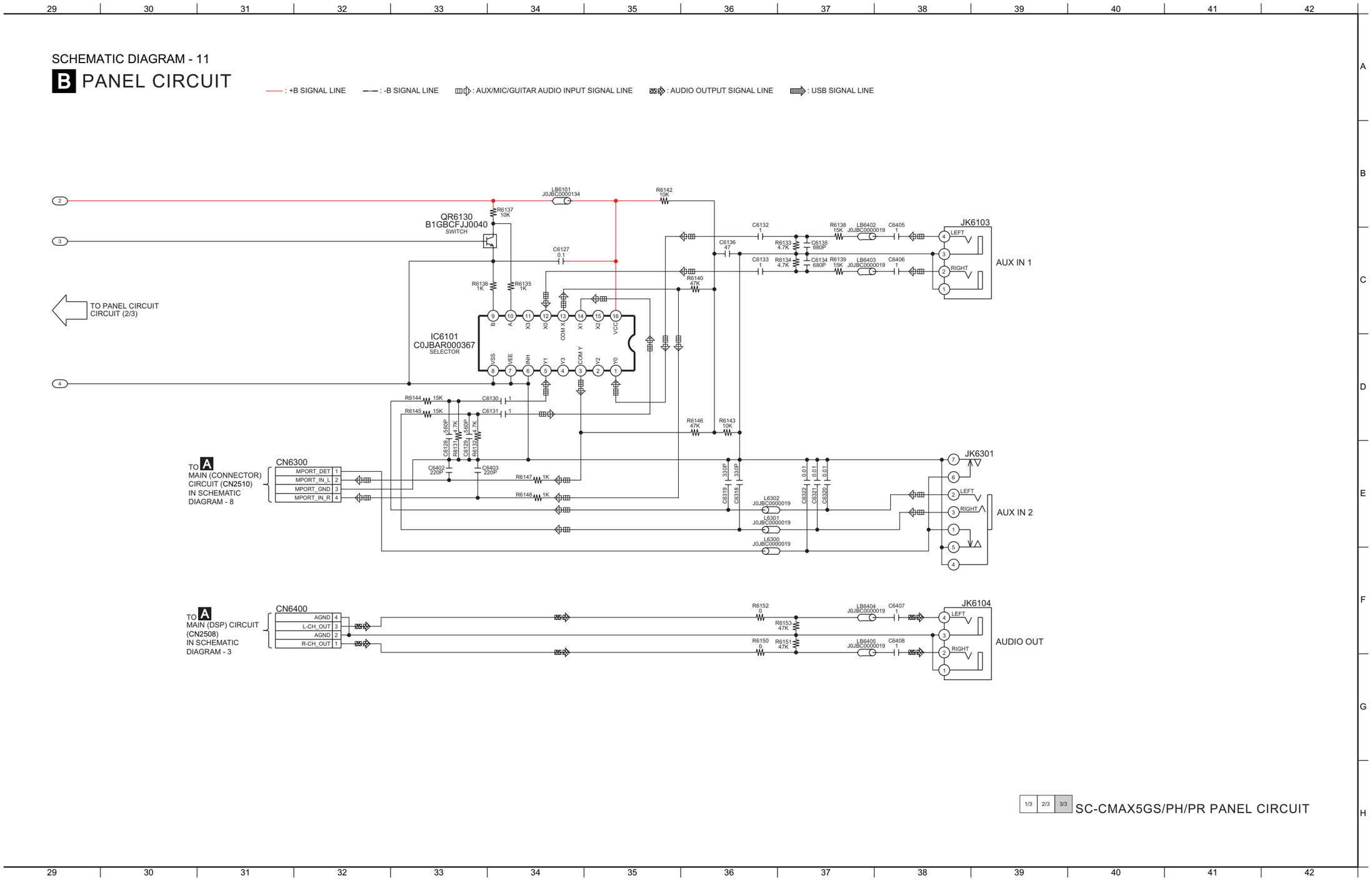

1/3 2/3 3/3 SC-CMAX5GS/PH/PR PANEL CIRCUIT

12.13. FL DISPLAY CIRCUIT

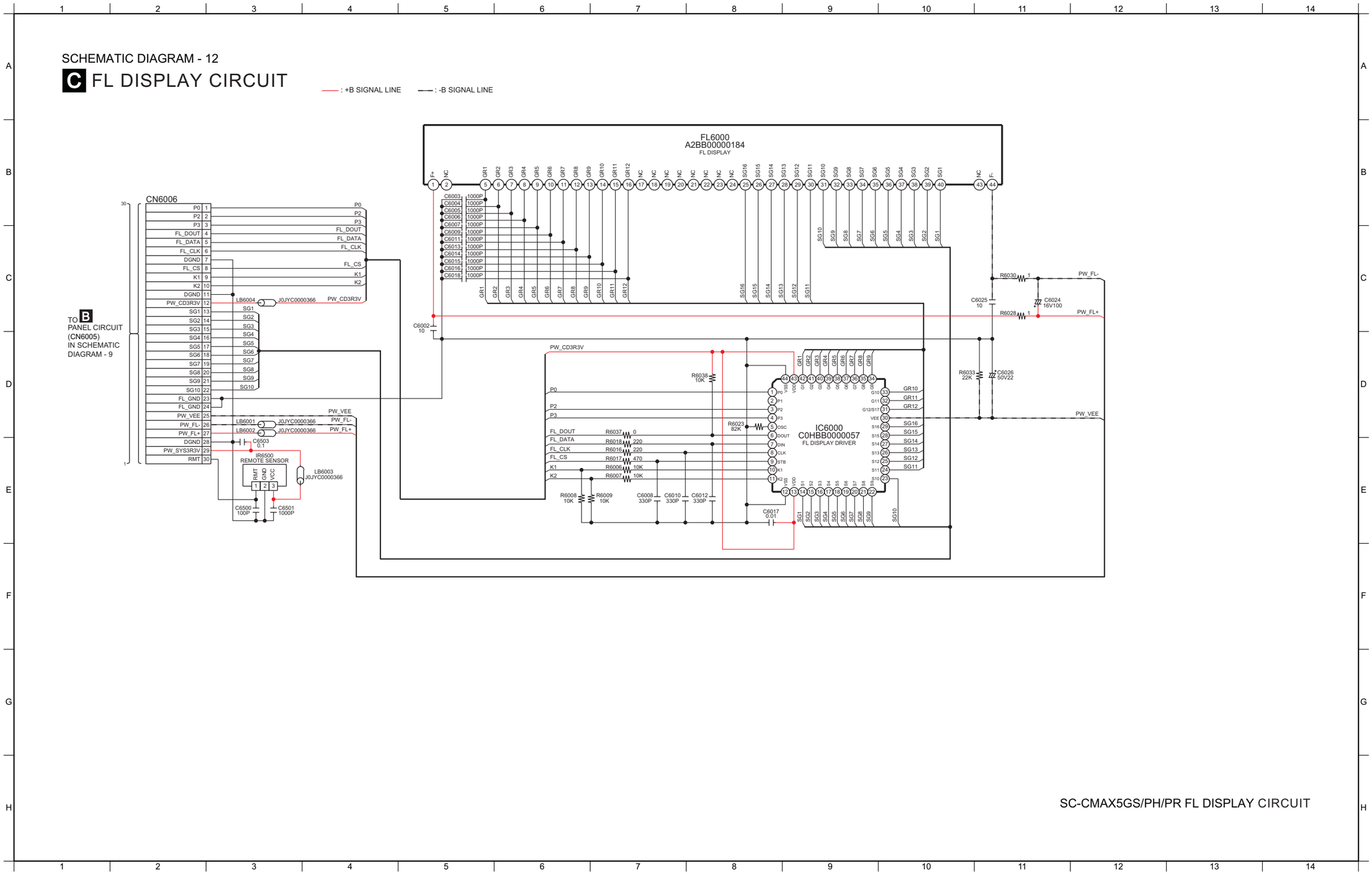

13 Printed Circuit Board

13.1. MAIN P.C.B. ASS'Y (Side A)

A MAIN P.C.B. ASS'Y (RFKB5105AA...PH)
(RFKB5105BA...PR)
(RFKB5105DA...GS)

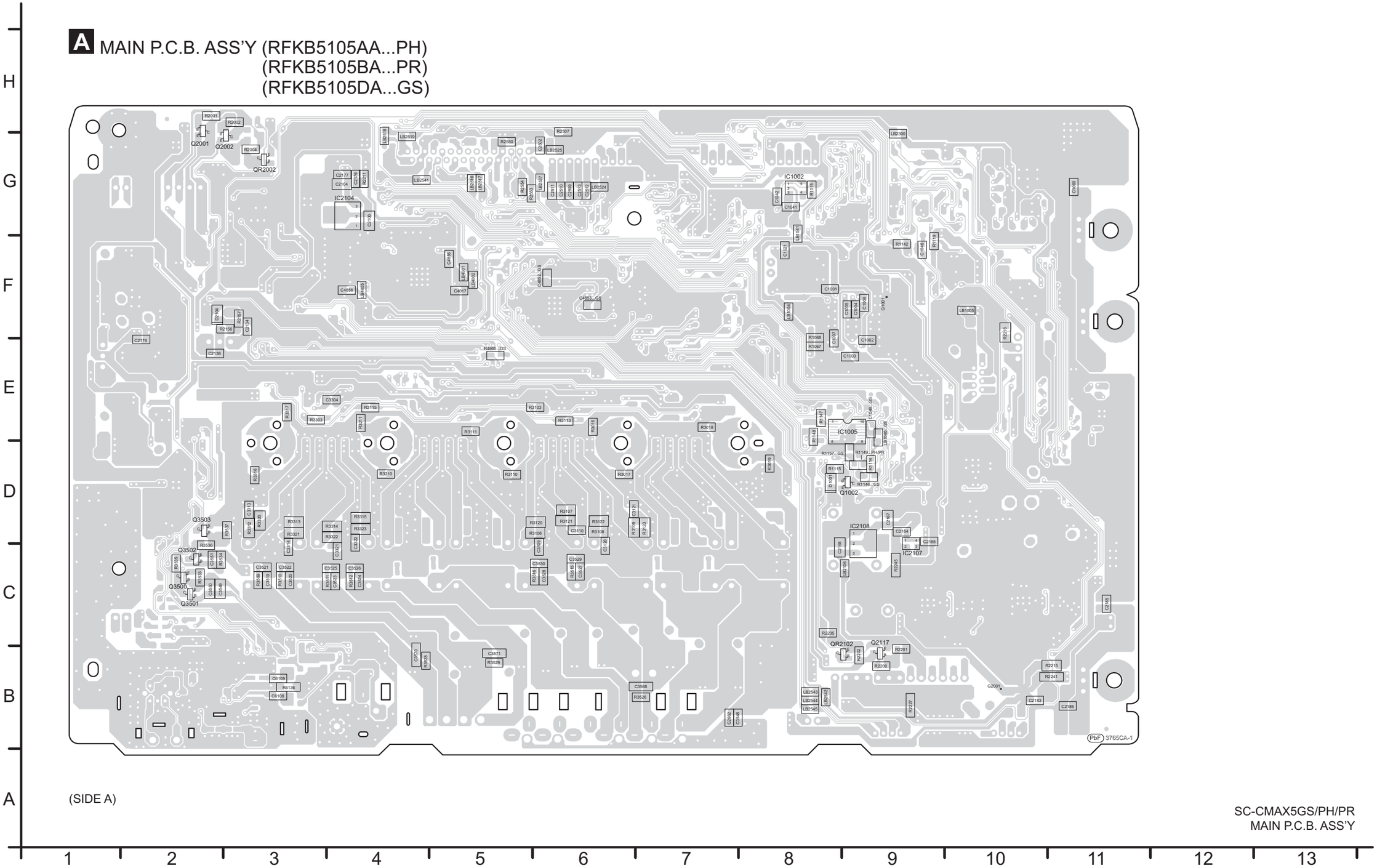

(SIDE A)

SC-CMAX5GS/PH/PR
MAIN P.C.B. ASS'Y

13.2. MAIN P.C.B. ASS'Y (Side B)

A MAIN P.C.B. ASS'Y (RFKB5105AA...PH)
(RFKB5105BA...PR)
(RFKB5105DA...GS)

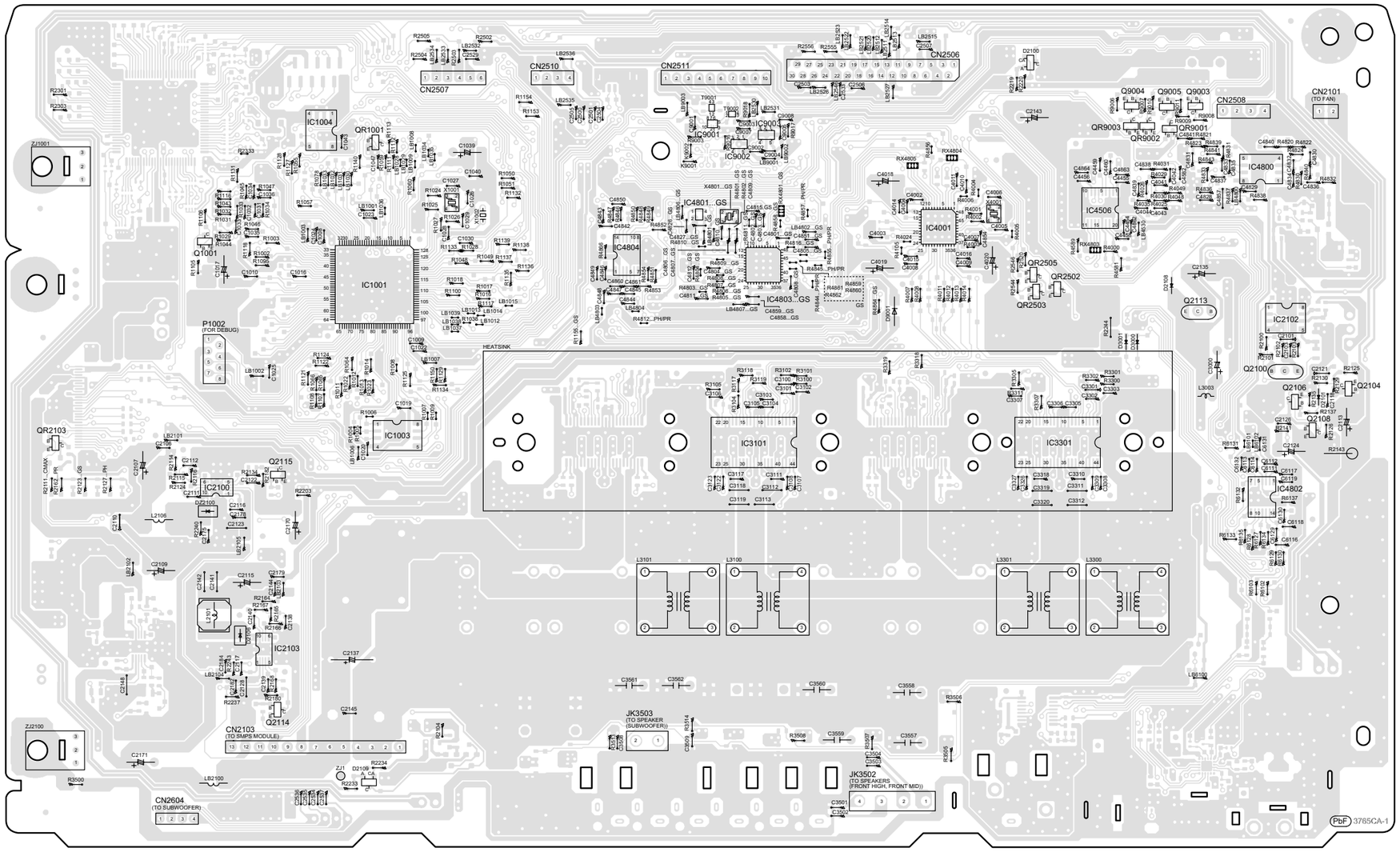

(SIDE B)

SC-CMAX5GS/PH/PR
MAIN P.C.B. ASS'Y

13.3. PANEL P.C.B.

B PANEL P.C.B. (REP5106AA)

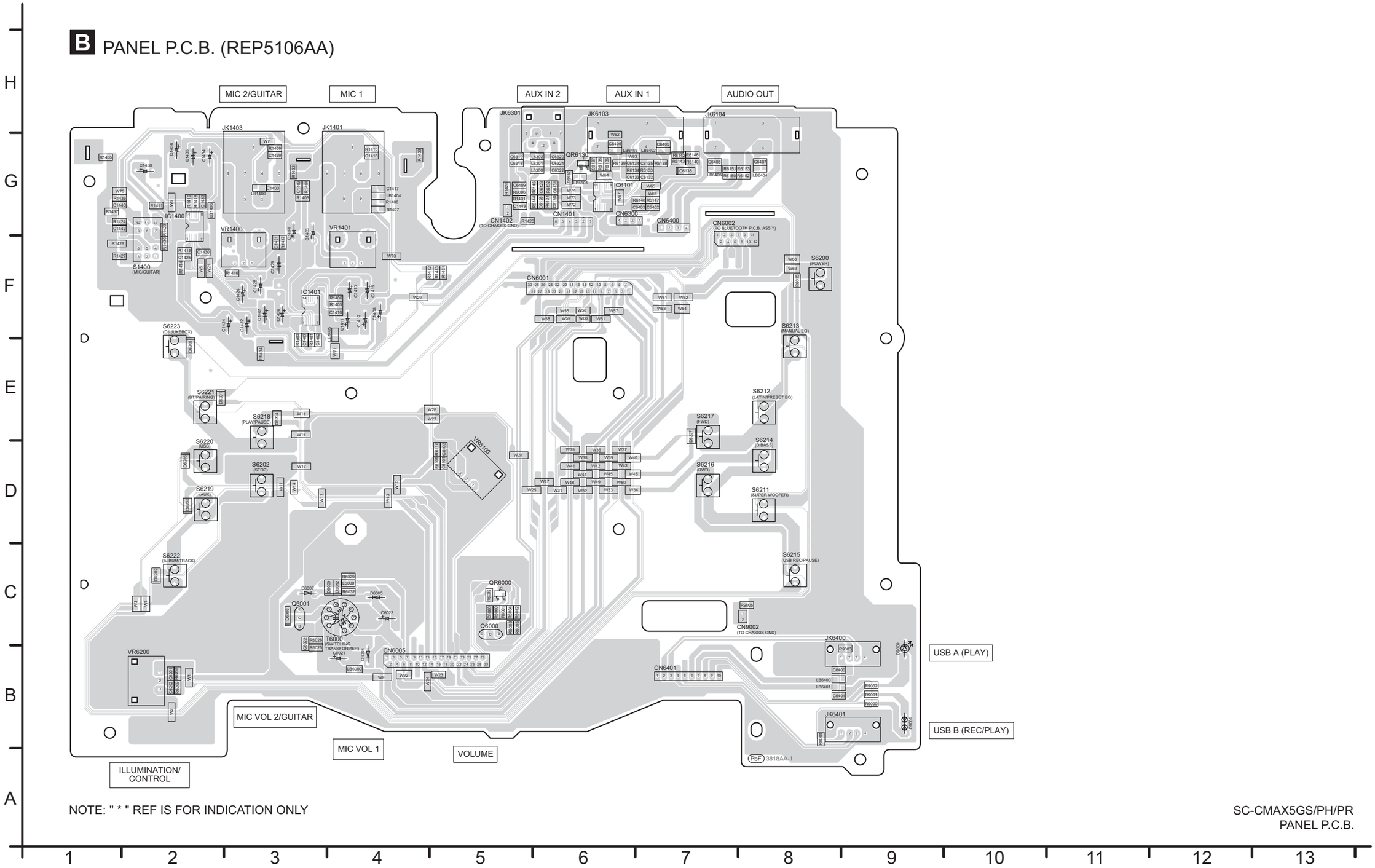

NOTE: " * " REF IS FOR INDICATION ONLY

SC-CMAX5GS/PH/PR
PANEL P.C.B.

13.4. FL DISPLAY P.C.B.

C FL DISPLAY P.C.B. (REP5106AB)

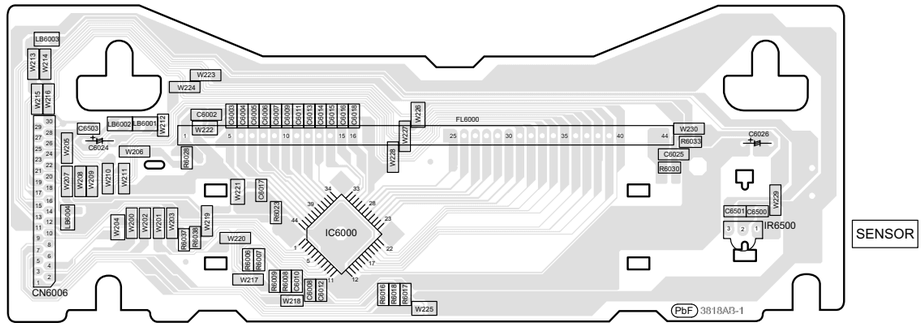

NOTE: " * " REF IS FOR INDICATION ONLY

SC-CMAX5GS/PH/PR
FL DISPLAY P.C.B.

14 Voltage and Waveform Measurement

14.1. Voltage Measurement

Note:

- Indicated voltage values are the standard values for the unit measured by the DC electronic circuit tester (high-impedance) with the chassis taken as standard.
  Therefore, there may exist some errors in the voltage values, depending on the internal impedance of the DC circuit tester.
- Circuit voltage and waveform described herein shall be regarded as reference information when probing defect point because it may differ from actual measuring value due to difference of Measuring instrument and its measuring condition and product itself.

14.1.1. MAIN P.C.B. ASS'Y (1/4)

REF NO.	IC1001																			
MODE	1	2	3	4	5	6	7	8	9	10	11	12	13	14	15	16	17	18	19	20
PLAY	3.3	3.3	3.3	3.3	1.4	3.3	0	3.3	3.3	0	3.3	0	0	3.3	0	0	3.3	1.6	0	0
STANDBY	3.3	3.3	3.3	3.3	1.4	3.3	0	3.3	3.3	0	3.3	0	0	3.3	0	0	3.3	1.6	0	0

REF NO.	IC1001																			
MODE	21	22	23	24	25	26	27	28	29	30	31	32	33	34	35	36	37	38	39	40
PLAY	3	3.3	0.1	3	0	0	0	2.2	3.3	0	3.3	0.1	1.6	1.6	0.9	0	0	1.3	1.3	0.2
STANDBY	3	3.3	0.1	3	0	0	0	2.2	3.3	0	3.3	0.1	1.6	1.6	0.9	0	0	1.3	1.3	0.2

REF NO.	IC1001																			
MODE	41	42	43	44	45	46	47	48	49	50	51	52	53	54	55	56	57	58	59	60
PLAY	0.7	0	3.3	3.3	1.1	1.1	3.3	3.3	3.3	1.7	1.7	1.7	0	1.6	1.6	1.4	1.4	0.1	0.5	1.6
STANDBY	0.7	0	3.3	3.3	1.1	1.1	3.3	3.3	3.3	1.7	1.7	1.7	0	1.6	1.6	1.4	1.4	0.1	0.5	1.6

REF NO.	IC1001																			
MODE	61	62	63	64	65	66	67	68	69	70	71	72	73	74	75	76	77	78	79	80
PLAY	1.7	1.7	1.7	1.7	1.7	0	1.5	1.5	1.5	1.5	0	0	3.3	3.3	3.3	3.3	1.7	3.3	3.3	0
STANDBY	1.7	1.7	1.7	1.7	1.7	0	1.5	1.5	1.5	1.5	0	0	3.3	3.3	3.3	3.3	1.7	3.3	3.3	0

REF NO.	IC1001																			
MODE	81	82	83	84	85	86	87	88	89	90	91	92	93	94	95	96	97	98	99	100
PLAY	0	1.7	1.7	0.9	0	3.3	1.4	3.3	3.3	0	0	1.6	0	3.2	0	3.3	0	0	0	0
STANDBY	0	1.7	1.7	0.9	0	3.3	1.4	3.3	3.3	0	0	1.6	0	3.2	0	3.3	0	0	0	0

REF NO.	IC1001																			
MODE	101	102	103	104	105	106	107	108	109	110	111	112	113	114	115	116	117	118	119	120
PLAY	1.6	3.3	3.3	0	3.1	3.1	3.3	3.3	2	1.7	1.7	1.5	3.3	0	0	3.3	3.3	3.3	3.3	3.3
STANDBY	1.6	3.3	3.3	0	3.1	3.1	3.3	3.3	2	1.7	1.7	1.5	3.3	0	0	3.3	3.3	3.3	3.3	3.3

REF NO.	IC1001																			
MODE	121	122	123	124	125	126	127	128												
PLAY	3.3	3.3	0	1.5	1.6	0	1.4	1.5												
STANDBY	3.3	3.3	0	1.5	1.6	0	1.4	1.5												

REF NO.	IC1002																			
MODE	1	2	3	4	5															
PLAY	3.3	3.3	0	0	1.9															
STANDBY	3.3	3.3	0	0	1.9															

REF NO.	IC1005																			
MODE	1	2	3	4	5	6	7	8	9	10	11	12	13	14	15	16				
PLAY	0	1.2	0.8	1.2	1.6	1.6	1.6	0	1.6	1.7	1.6	0	0	0	0	3.3				
STANDBY	0	1.2	0.8	1.2	1.6	1.6	1.6	0	1.6	1.7	1.6	0	0	0	0	3.3				

REF NO.	IC2100																			
MODE	1	2	3	4	5	6	7	8	9	10										
PLAY	10.9	39.5	3.1	2.1	0.5	0	0.8	0.7	0	4.7										
STANDBY	10.9	39.5	3.1	2.1	0.5	0	0.8	0.7	0	4.7										

SC-CMAX5PH/PR/GS MAIN P.C.B. ASS'Y

14.1.2. MAIN P.C.B. ASS'Y (2/4)

REF NO.	IC2102																			
MODE	1	2	3	4	5	6	7	8												
PLAY	8.6	1.6	1.6	0	1.6	1.6	8.6	15.3												
STANDBY	8.6	1.6	1.6	0	1.6	1.6	8.6	15.3												

REF NO.	IC2103																			
MODE	1	2	3	4	5	6	7	8	9	10										
PLAY	21.3	39.5	3.1	2.1	0.5	0	0.8	0.7	0	15.2										
STANDBY	21.3	39.5	3.1	2.1	0.5	0	0.8	0.7	0	15.2										

REF NO.	IC2104																			
MODE	1	2	3																	
PLAY	0	3.3	5.5																	
STANDBY	0	3.3	5.5																	

REF NO.	IC2107																			
MODE	1	2	3	4																
PLAY	3.3	0	1.6	3.3																
STANDBY	3.3	0	1.6	3.3																

REF NO.	IC2108																			
MODE	1	2	3																	
PLAY	0	3.3	5																	
STANDBY	0	3.3	5																	

REF NO.	IC3101																			
MODE	1	2	3	4	5	6	7	8	9	10	11	12	13	14	15	16	17	18	19	20
PLAY	12.2	12.1	1.2	0	1.7	1.7	3.3	0	0	0	0	0	7.8	3.3	0	3.3	3.3	0	0	0
STANDBY	12.2	12.1	1.2	0	1.7	1.7	3.3	0	0	0	0	0	7.8	3.3	0	3.3	3.3	0	0	0

REF NO.	IC3101																			
MODE	21	22	23	24	25	26	27	28	29	30	31	32	33	34	35	36	37	38	39	40
PLAY	3.3	12	30.1	30.1	0	0	19	19	39.5	39.5	39.5	19	0	0	19	39.5	39.5	39.5	19	19
STANDBY	3.3	12	30.1	30.1	0	0	19	19	39.5	39.5	39.5	19	0	0	19	39.5	39.5	39.5	19	19

REF NO.	IC3101																			
MODE	41	42	43	44																
PLAY	0	0	30.1	30																
STANDBY	0	0	30.1	30																

REF NO.	IC3301																			
MODE	1	2	3	4	5	6	7	8	9	10	11	12	13	14	15	16	17	18	19	20
PLAY	12.2	12.1	1.2	0	1.7	1.7	3.3	0	0	0	0	0	7.8	3.3	0	3.3	3.3	0	0	0
STANDBY	12.2	12.1	1.2	0	1.7	1.7	3.3	0	0	0	0	0	7.8	3.3	0	3.3	3.3	0	0	0

REF NO.	IC3301																			
MODE	21	22	23	24	25	26	27	28	29	30	31	32	33	34	35	36	37	38	39	40
PLAY	3.3	12	30.1	30.1	0	0	19	19	39.5	39.5	39.5	19	0	0	19	39.5	39.5	39.5	19	19
STANDBY	3.3	12	30.1	30.1	0	0	19	19	39.5	39.5	39.5	19	0	0	19	39.5	39.5	39.5	19	19

REF NO.	IC3301																			
MODE	41	42	43	44																
PLAY	0	0	30.1	30																
STANDBY	0	0	30.1	30																

REF NO.	IC4001																			
MODE	1	2	3	4	5	6	7	8	9	10	11	12	13	14	15	16	17	18	19	20
PLAY	0	3.3	3.3	3.3	3.3	0	1.4	1.3	1.7	1.6	3.3	3.3	1.5	1.5	0	1.4	0	0	1.7	1.6
STANDBY	0	3.3	3.3	3.3	3.3	0	1.4	1.3	1.7	1.6	3.3	3.3	1.5	1.5	0	1.4	0	0	1.7	1.6

SC-CMAX5PH/PR/GS MAIN P.C.B. ASS'Y

14.1.3. MAIN P.C.B. ASS'Y (3/4)

REF NO.	IC4001																			
MODE	21	22	23	24	25	26	27	28	29	30	31	32	33	34	35	36	37	38	39	40
PLAY	3.3	0	1.5	3.3	0	3.3	1.7	1.7	1.7	1.7	1.7	1.7	1.7	1.7	3.3	0	0	0	0	3.3
STANDBY	3.3	0	1.5	3.3	0	3.3	1.7	1.7	1.7	1.7	1.7	1.7	1.7	1.7	3.3	0	0	0	0	3.3

REF NO.	IC4001																			
MODE	41	42	43	44	45	46	47	48												
PLAY	1.5	1.5	0	0	3.3	0	0	0												
STANDBY	1.5	1.5	0	0	3.3	0	0	0												

REF NO.	IC4506																			
MODE	1	2	3	4	5	6	7	8	9	10	11	12	13	14	15	16	17	18	19	20
PLAY	3.3	1.7	0	-1.6	-3.2	0	0	3.3	0	0	0	0	1.6	1.3	1.7	0	3.3	1.9	0	3.3
STANDBY	3.3	1.7	0	-1.6	-3.2	0	0	3.3	0	0	0	0	1.6	1.3	1.7	0	3.3	1.9	0	3.3

REF NO.	IC4800																			
MODE	1	2	3	4	5	6	7	8												
PLAY																				
STANDBY																				

REF NO.	IC4801																			
MODE	1	2	3	4																
PLAY	3.3	0	1.8	3.3																
STANDBY	3.3	0	1.8	3.3																

REF NO.	IC4802																			
MODE	1	2	3	4	5	6	7	8	9	10	11	12	13	14						
PLAY	2.8	0	5.5	3.3	0	1.7	1.6	1.6	1.3	0	0	0	2.8	2.8						
STANDBY	2.8	0	5.5	3.3	0	1.7	1.6	1.6	1.3	0	0	0	2.8	2.8						

REF NO.	IC4803																			
MODE	1	2	3	4	5	6	7	8	9	10	11	12	13	14	15	16	17	18	19	20
PLAY	1.8	0	3	1.7	1.8	0	0.8	1.2	1.2	1.8	3.3	0	1.3	1.6	3.3	3.3	3.3	1.8	3.3	0
STANDBY	1.8	0	3	1.7	1.8	0	0.8	1.2	1.2	1.8	3.3	0	1.3	1.6	3.3	3.3	3.3	1.8	3.3	0

REF NO.	IC4803																			
MODE	21	22	23	24	25	26	27	28	29	30	31	32	33	34	35	36	37	38	39	40
PLAY	3.3	3.3	3.3	0	0	16.8	0	0	3	16.8	16.8	0.6	0	3	16.8	0	0	0.3	0	0
STANDBY	3.3	3.3	3.3	0	0	16.8	0	0	3	16.8	16.8	0.6	0	3	16.8	0	0	0.3	0	0

REF NO.	IC4803																			
MODE	41	42	43	44	45	46	47	48												
PLAY	0	0	0	0	0	1.5	3.3	1.6												
STANDBY	0	0	0	0	0	1.5	3.3	1.6												

REF NO.	IC4804																			
MODE	1	2	3	4	5	6	7	8	9	10	11	12	13	14						
PLAY	2.8	0	5.5	3.3	0	1.7	1.6	1.6	1.3	0	0	0	2.8	2.8						
STANDBY	2.8	0	5.5	3.3	0	1.7	1.6	1.6	1.3	0	0	0	2.8	2.8						

REF NO.	IC6100																			
MODE	1	2	3	4	5	6	7	8	9	10	11	12	13	14	15	16				
PLAY	0	0	0	0	0	0	0	0	12.5	12.5	0	0	0	0	0	12.5				
STANDBY	0	0	0	0	0	0	0	0	12.5	12.5	0	0	0	0	0	12.5				

REF NO.	IC9001																			
MODE	1	2	3	4	5	6	7	8	9	10										
PLAY	0	0	0	0	0	1	1.4	0	3.3	0										
STANDBY	0	0	0	0	0	1	1.4	0	3.3	0										

SC-CMAX5PH/PR/GS MAIN P.C.B. ASS'Y

14.1.4. MAIN P.C.B. ASS'Y (4/4)

REF NO.	IC9002																			
MODE	1	2	3	4	5															
PLAY	0	0	3.3	0	5.1															
STANDBY	0	0	3.3	0	5.1															

REF NO.	IC9003																			
MODE	1	2	3	4	5															
PLAY	5.1	0	3.3	3.3	5.1															
STANDBY	5.1	0	3.3	3.3	5.1															

REF NO.	Q1001				Q1002				Q2001				Q2002				Q2100			
MODE	E	C	B		E	C	B		E	C	B		E	C	B		E	C	B	
PLAY	0	0	0.6		0	0	23.9										7.9	15.3	8.5	
STANDBY	0	0	0.6		0	0	23.9										7.9	15.3	8.5	

REF NO.	Q2104				Q2106				Q2108				Q2113				Q2117			
MODE	E	C	B		E	C	B		E	C	B		E	C	B		E	C	B	
PLAY	0.2	11.1	0.2		0	0	0.7		0	3.2	0		12.5	15.3	13.1		5	4.9	4.3	
STANDBY	0.2	11.1	0.2		0	0	0.7		0	3.2	0		12.5	15.3	13.1		5	4.9	4.3	

REF NO.	Q3500				Q3501				Q3502				Q3503				Q9003			
MODE	E	C	B		E	C	B		E	C	B		E	C	B		E	C	B	
PLAY	19.7	39	19.7		19.7	39	19.7		39.5	0	39.4		0	3.2	0		5.5	0	5.1	
STANDBY	19.7	39	19.7		19.7	39	19.7		39.5	0	39.4		0	3.2	0		5.5	0	5.1	

REF NO.	Q9004				Q9005				QR1001				QR2002				QR2102			
MODE	E	C	B		E	C	B		E	C	B		E	C	B		E	C	B	
PLAY	5.5	0	5.1		5.5	0	5.1										0	0	3.1	
STANDBY	5.5	0	5.1		5.5	0	5.1										0	0	3.1	

REF NO.	QR2502				QR2503				QR2505				QR9001				QR9002			
MODE	E	C	B		E	C	B		E	C	B		E	C	B		E	C	B	
PLAY	0	0	0		0	0	3.2		0	0	0		0	6.2	0		0	6.2	0	
STANDBY	0	0	0		0	0	3.2		0	0	0		0	6.2	0		0	6.2	0	

REF NO.	QR9003																			
MODE	E	C	B																	
PLAY	0	6.2	0																	
STANDBY	0	6.2	0																	

SC-CMAX5PH/PR/GS MAIN P.C.B. ASS'Y

14.1.5. PANEL & FL DISPLAY P.C.B.

REF NO.	IC1400																			
MODE	1	2	3	4	5	6	7	8	9	10	11	12	13	14						
PLAY	6.2	6.2	6.2	6.2	6.2	6.3	6.3	0	12.3	6.1	0.2	0	12.3	6.2						
STANDBY	6.2	6.2	6.2	6.2	6.2	6.3	6.3	0	12.3	6.1	0.2	0	12.3	6.2						

REF NO.	IC1401																			
MODE	1	2	3	4	5	6	7	8	9	10	11	12	13	14						
PLAY	6.2	6.2	6.1	6.1	6.1	6.2	6.2	0	12.3	6.1	0.2	0	12.3	6.1						
STANDBY	6.2	6.2	6.1	6.1	6.1	6.2	6.2	0	12.3	6.1	0.2	0	12.3	6.1						

REF NO.	Q6000				Q6001				QR6000				QR6130							
MODE	E	C	B		E	C	B		E	C	B		E	C	B					
PLAY	1.7	4.8	2.1		0	15.5	-0.2		0	0.4	3.3		0	12.2	0					
STANDBY	1.7	4.8	2.1		0	15.5	-0.2		0	0.4	3.3		0	12.2	0					

SC-CMAX5PH/PR/GS PANEL P.C.B.

REF NO.	IC6000																			
MODE	1	2	3	4	5	6	7	8	9	10	11	12	13	14	15	16	17	18	19	20
PLAY	0	0	0	0	1.9	3.3	1.3	0	2.9	0	0	0	3.3	-15.9	-15.9	-19.6	-23.3	-21.4	-23.3	-21.4
STANDBY	0	0	0	0	1.9	3.3	1.3	0	2.9	0	0	0	3.3	-15.9	-15.9	-19.6	-23.3	-21.4	-23.3	-21.4

REF NO.	IC6000																			
MODE	21	22	23	24	25	26	27	28	29	30	31	32	33	34	35	36	37	38	39	40
PLAY	-23.3	-23.3	-21.4	-23.3	-15.9	-19.6	-15.9	-21.4	-23.3	-23.7	-22	-21.6	-21.4	-21.4	-21.4	-21.4	-21.4	-21.4	-21.4	-21.4
STANDBY	-23.3	-23.3	-21.4	-23.3	-15.9	-19.6	-15.9	-21.4	-23.3	-23.7	-22	-21.6	-21.4	-21.4	-21.4	-21.4	-21.4	-21.4	-21.4	-21.4

REF NO.	IC6000																			
MODE	41	42	43	44																
PLAY	-21.5	-21.8	3.3	0																
STANDBY	-21.5	-21.8	3.3	0																

SC-CMAX5PH/PR/GS FL DISPLAY P.C.B.

15 Exploded View and Replacement Parts List

15.1. Cabinet Parts Location (1/4)

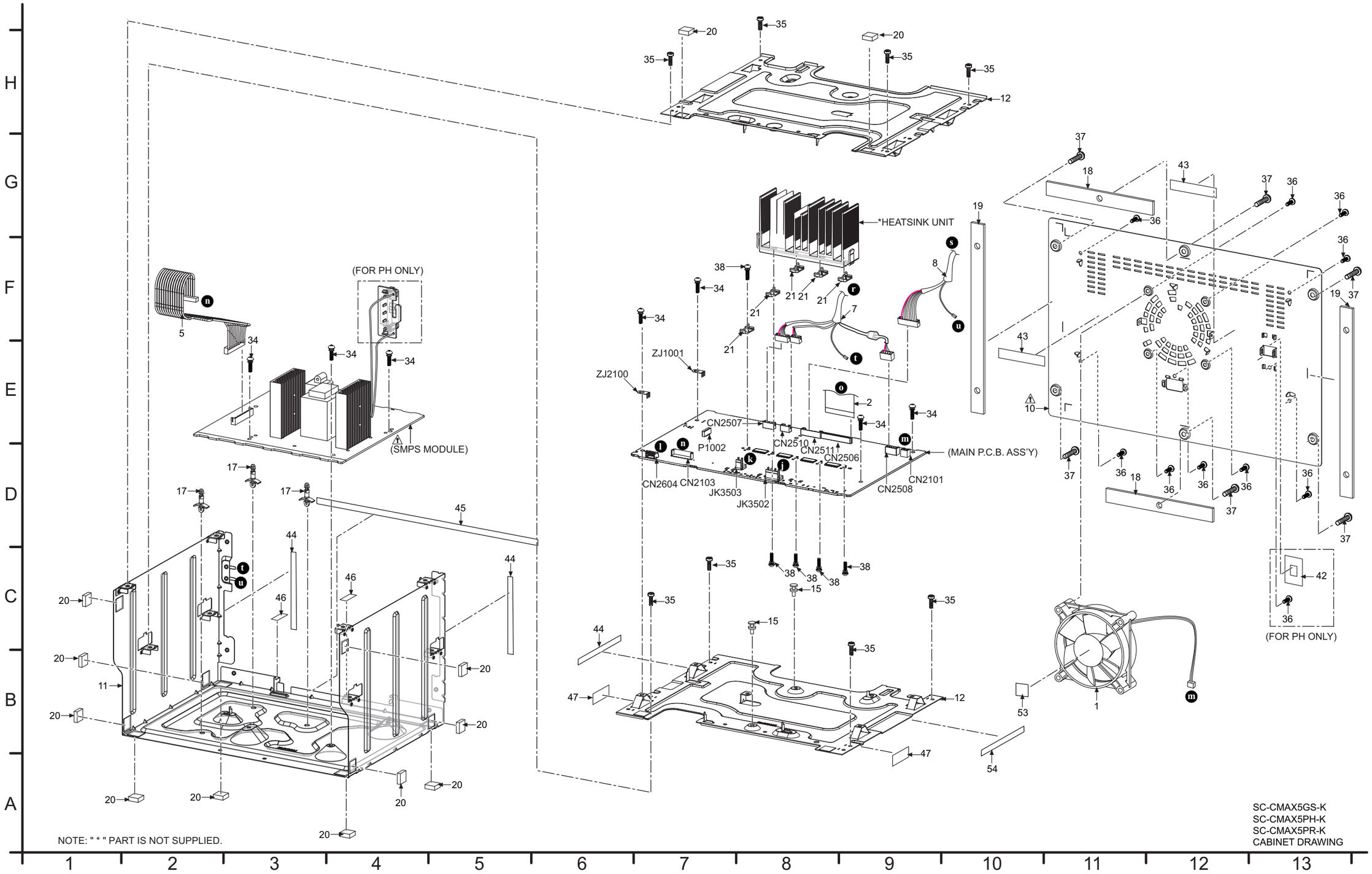

15.2. Cabinet Parts Location (2/4)

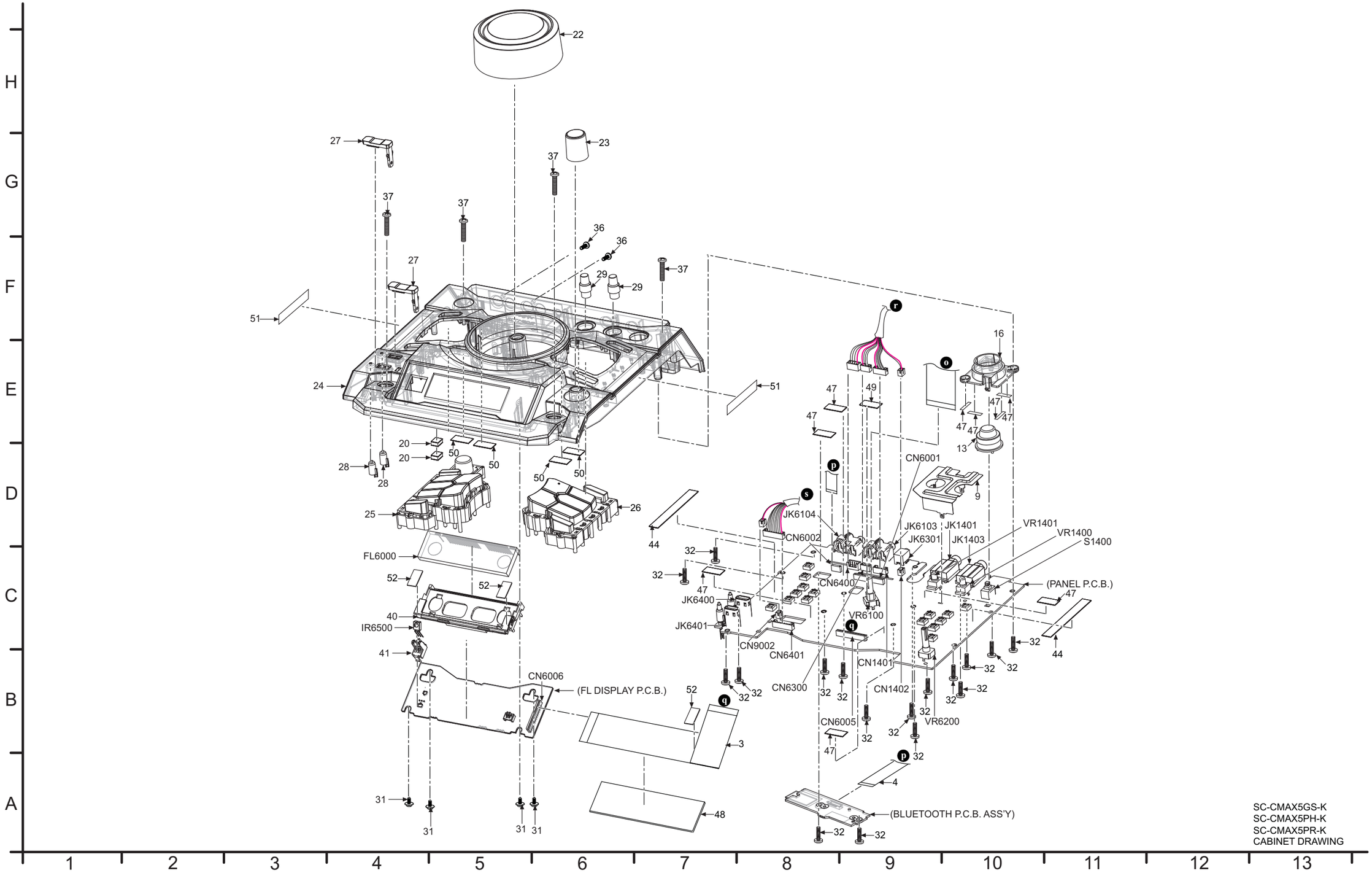

15.3. Cabinet Parts Location (3/4)

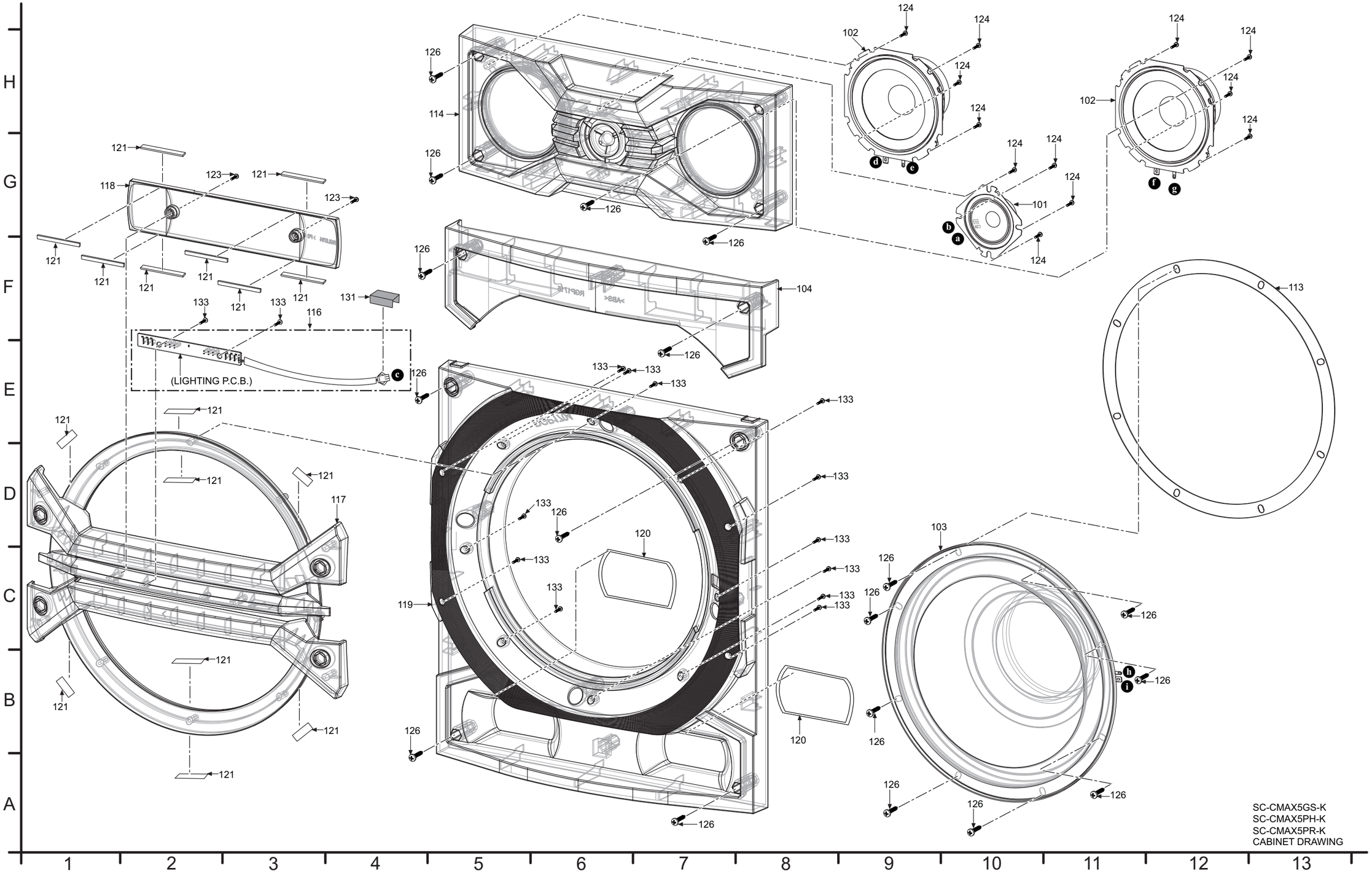

15.4. Cabinet Parts Location (4/4)

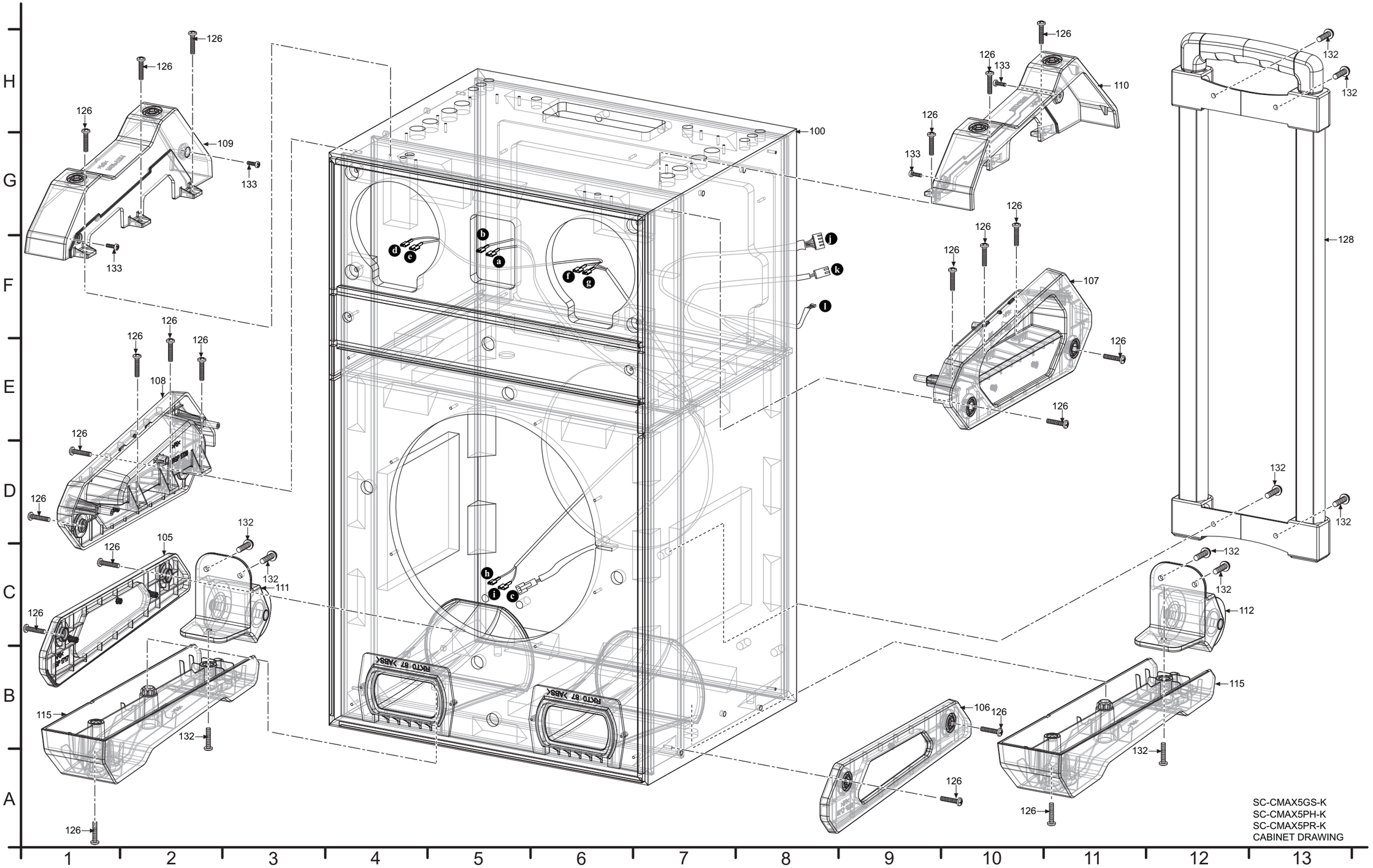

15.5. Packaging

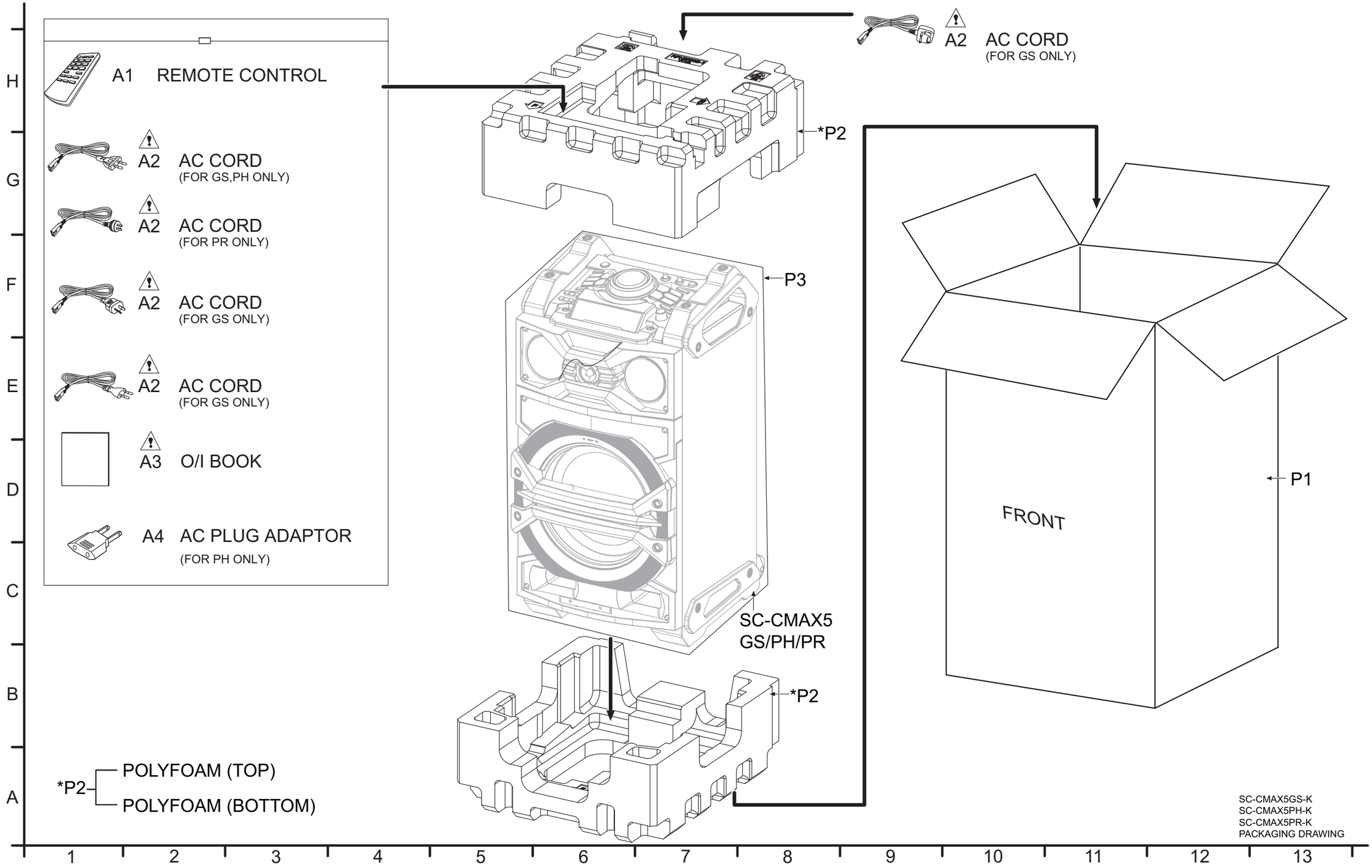

15.6. Mechanical Replacement Parts List

Important Safety Notice

Components identified by ⚠ mark have special characteristics important for safety.
When replacing any of these components, use only manufacturer's specified parts.

RTL (Retention Time Limited)

Note: The marking (RTL) indicates that the Retention Time is Limited for this item.
After the discontinuation of this assembly in production, the item will continue to be available for a specific period of time. The retention period of availability is dependant on the type of assembly, and in accordance with the laws governing part and product retention. After the end of this period, the assembly will no longer be available.

Note:

- When replacing any of these components, be sure to use only manufacturer's specified parts shown in the replacement part list.
- The parenthesized indications on the Remarks column specify the destination & product color (Refer to the cover page for the information).
- Parts without these indications shall be used for all areas.
- All parts mentioned are supplied by PAVCJM unless indicated likewise.
- Reference for O/I book languages are as follows:

Ar:	Arabic	Du:	Dutch	It:	Italian	Sp:	Spanish
Cf:	Canadian French	En:	English	Ko:	Korean	Sw:	Swedish
Cz:	Czech	Fr:	French	Po:	Polish	Co:	Traditional Chinese
Da:	Danish	Ge:	German	Ru:	Russian	Cn:	Simplified Chinese
Pe:	Persian	Ur:	Ukraine	Pr:	Portuguese	Fi:	Finnish

Safety	Ref. No.	Part No.	Part Name & Description	Qty	Remarks
			CABINET AND CHASSIS		
	1	L6FALEFH0030	FAN UNIT	1	
	2	REE2014	30P FFC (PANEL - MAIN)	1	
	3	REE2015	30P FFC (PANEL - FL)	1	
	4	REE2016	12P FFC (PANEL - BT)	1	
	5	REX1761	13P WIRE (SMPS - MAIN)	1	
	7	REX1831	4 BUNDLE WIRE WITH FERRITE CORE	1	
	8	REX1798	2 BUNDLE WIRE	1	
	9	RSC1301	MIC SHIELD PLATE	1	
⚠	10	RGR0468A-A	REAR PANEL	1	PH
⚠	10	RGR0468B-A	REAR PANEL	1	PR
⚠	10	RGR0468B-B	REAR PANEL	1	GS
	11	RMK0884	BOTTOM CHASSIS	1	
	12	RMK0885	SUPPORT PLATE	2	
	13	RGU2972-K	GUITAR BUTTON	1	
	15	RMX0444	PCB SPACER (D-AMP)	2	
	16	RMQ2373-1	GUITAR BUTTON HOLDER	1	
	17	RMX0510	SMPS PCB SPACER	3	
	18	RKA0334-K	CUSHION A	2	

Safety	Ref. No.	Part No.	Part Name & Description	Qty	Remarks
	19	RKA0335-K	CUSHION B	2	
	20	RKA0336-K	CHASSIS CUSHION	14	
	21	RMZX1022-1	PCB SPACER	5	
	22	RGW0428-1S	VOLUME KNOB	1	
	23	RGW0435-K	SKIP KNOB	1	
	24	RFKNCMAX5PHK	TOP PANEL ASS'Y	1	PH,PR
	24	RFKNCMAX5GSK	TOP PANEL ASS'Y	1	GS
	25	RGU2973-K	LEFT FUNCTION BUTTON	1	PH,PR
	25	RGU2973A-K	LEFT FUNCTION BUTTON	1	GS
	26	RGU2974-K	RIGHT FUNCTION BUTTON	1	
	27	RKF0983-H	USB COVER	2	
	28	RGL0787A-W	USB REC LIGHT PIECE	2	
	29	RGW0450-K	MIC VOLUME KNOB	2	
	31	RHD26016-1L	SCREW	4	
	32	RHD26046-L	SCREW	17	
	34	RHDX30005-J	SCREW	7	
	35	XTB3+10JFJ	SCREW	8	
	36	XTB3+10JFJK	SCREW	12	PH
	36	XTB3+10JFJK	SCREW	11	GS,PR
	37	XTB4+20AFJK	SCREW	10	
	38	RHD26043-1	SCREW	5	
	40	RMNV0079-1	FL HOLDER	1	
	41	RMN1085	IR HOLDER	1	
	42	RMN1079	VOLTAGE SELECTOR COVER PC SHEET	1	PH
	43	RMF0734	EVA	2	
	44	RMFX0099	HIMELON	5	

Safety	Ref. No.	Part No.	Part Name & Description	Qty	Remarks
	45	RMF0737	HIMELON	1	
	46	RMF0738	HIMELON	2	
	47	RMF0739	HIMELON	11	
	48	RMF0730	HIMELON	1	
	49	RMQ2420	EPT SEALER	1	
	50	RMQ2421	EPT SEALER	4	
	51	RMF0736	EVA	2	
	52	RMF0731	EVA	3	
	53	RMF0735	EVA	1	
	54	RMF0740	HIMELON	1	
	100	RYQ1458-K	SPEAKER BOX ASS'Y	1	
	101	EAS6PH134C	TWEETER SPEAKER (6CM)	1	
	102	L0AA10A00044	WOOFER SPEAKER (10CM)	2	
	103	L0AA25A00032	WOOFER SPEAKER (25CM)	1	
	104	RGP1715-K	CENTER PANEL	1	
	105	RGP1717-K	SIDE COVER LEFT	1	
	106	RGP1718-K	SIDE COVER RIGHT	1	
	107	RGP1719-K	HANDLE RIGHT	1	
	108	RGP1720-K	HANDLE LEFT	1	
	109	RGP1721-K	HANDLE COVER LEFT	1	
	110	RGP1722-K	HANDLE COVER RIGHT	1	
	111	RKL0007	CASTER WHEEL (L)	1	
	112	RKL0008	CASTER WHEEL (R)	1	
	113	RMQ2208	EVA PACKING	1	
	114	RYP1977-K	FRONT PANEL ASS'Y	1	
	115	RYP2023-K	BOTTOM STAND ASS'Y	2	
	116	REE1844	LIGHTING WIRE PCB ASSY	1	
	117	RGK2558A-S	FRONT ORNAMENT	1	
	118	RGL0784-Q	PCB COVER	1	
	119	RGP1704-K	FRONT PANEL	1	
	120	RMF0688A	HIMELON (INNER PORT)	2	
	121	RMQ2223	EVA	16	
	123	XTB3+16GFJK	SCREW	2	
	124	XTB4+10GFJ	SCREW	12	
	126	XTB4+20AFJK	SCREW	40	
	128	RYH0024-K	HANDLE BAR UNIT	1	
	131	RMQ2070	EVA	1	
	132	XYN5+J20FJK	SCREW	10	
	133	XTB3+10GFJ	SCREW	18	
			PACKING MATERI-ALS		
	P1	RPG0N61-2	PACKING CASE	1	PH
	P1	RPG0N62	PACKING CASE	1	PR
	P1	RPG0N63	PACKING CASE	1	GS
	P2	RPN2696-1	POLYFOAM	1	
	P3	RPF0736	MIRAMAT BAG	1	
			ACCESSORIES		
	A1	N2QAYB001000	REMOTE CONTROL	1	
⚠	A2	K2CA2YY00039	AC CORD	1	PR
⚠	A2	K2CJ2YY00101	AC CORD	1	GS
⚠	A2	K2CP2YY00061	AC CORD	1	GS
⚠	A2	K2CQ2YY00119	AC CORD	1	GS,PH
⚠	A2	K2CT2YY00097	AC CORD	1	GS
⚠	A3	RQT9960-M	O/I BOOK (En/Sp)	1	PH,PR
⚠	A3	RQT9961-G	O/I BOOK (En/Cn)	1	GS
⚠	A4	K2DAYYY00002	AC PLUG ADAPTOR	1	PH

15.7. Electrical Replacement Parts List

Important Safety Notice

Components identified by ⚠ mark have special characteristics important for safety.
When replacing any of these components, use only manufacturer's specified parts.

RTL (Retention Time Limited)

Note: The marking (RTL) indicates that the Retention Time is Limited for this item.
After the discontinuation of this assembly in production, the item will continue to be available for a specific period of time. The retention period of availability is dependant on the type of assembly, and in accordance with the laws governing part and product retention. After the end of this period, the assembly will no longer be available.

Note:

- When replacing any of these components, be sure to use only manufacturer's specified parts shown in the replacement part list.
- The parenthesized indications on the Remarks column specify the destination & product color (Refer to the cover page for the information).
- Parts without these indications shall be used for all areas.
- Capacitor value are in microfarads (uF) unless specified otherwise, P=Pico-farads (pF), F=Farads.
- Resistance values are in ohms, unless specified otherwise, 1K=1000 (OHM).
- All parts mentioned are supplied by PAVCJM unless indicated likewise.
- Parts mentioned [SPG] in the Remarks column are supplied by JAPAN.

E.S.D. standards for Electrostatically Sensitive Devices, refer to "PREVENTION OF ELECTROSTATIC DISCHARGE (ESD) TO ELECTROSTATIC SENSITIVE (ES) DEVICES" section.

Safety	Ref. No.	Part No.	Part Name & Description	Qty	Remarks
			PRINTED CIRUIT BOARDS		
	PCB1	RFKB5105AA	MAIN P.C.B. ASS'Y	1	(E.S.D) (RTL) PH
	PCB1	RFKB5105BA	MAIN P.C.B. ASS'Y	1	(E.S.D) (RTL) PR
	PCB1	RFKB5105DA	MAIN P.C.B. ASS'Y	1	(E.S.D) (RTL) GS
	PCB2	RFKV5105AB	BLUETOOTH P.C.B. ASS'Y	1	(E.S.D) PH
	PCB2	RFKV5105BB	BLUETOOTH P.C.B. ASS'Y	1	(E.S.D) PR
	PCB2	RFKV5105DB	BLUETOOTH P.C.B. ASS'Y	1	(E.S.D) GS
	PCB3	REP5106AA	PANEL P.C.B.	1	(RTL)
	PCB4	REP5106AB	FL DISPLAY P.C.B.	1	(RTL)
⚠	PCB5	N0AC2GP00001	SMPS MODULE	1	GS,PR
⚠	PCB5	N0AD2GP00002	SMPS MODULE	1	PH
			INTEGRATED CIRCUITS		
	IC1001	C1AB00004188	IC	1	(E.S.D) JIGS & ADJ
	IC1002	C0EBE0000338	IC	1	(E.S.D)
	IC1003	RFKWFCMAX5GM	IC	1	(E.S.D) JIGS & ADJ
	IC1004	RFKWECMAX5GM	IC	1	(E.S.D) JIGS & ADJ
	IC1005	C0JBAR000596	IC	1	(E.S.D)
	IC1400	C1AB00003130	IC	1	(E.S.D)
	IC1401	C1AB00003130	IC	1	(E.S.D)
	IC2100	C0DBAYY01594	IC	1	(E.S.D)
	IC2102	C0ABBB000342	IC	1	(E.S.D)
	IC2103	C0DBAYY01594	IC	1	(E.S.D)
	IC2104	C0DBGYY03909	IC	1	(E.S.D)
	IC2107	C0DBGYY00911	IC	1	(E.S.D)
	IC2108	C0DBGYY03909	IC	1	(E.S.D)
	IC3101	C1AB00003986	IC	1	(E.S.D)
	IC3301	C1AB00003986	IC	1	(E.S.D)
	IC4001	VUEALLPT090	IC	1	(E.S.D)
	IC4506	C1AB00004031	IC	1	(E.S.D)
	IC4800	C0ABBB000230	IC	1	(E.S.D)
	IC4801	C0DBGYY03252	IC	1	(E.S.D) GS
	IC4802	C0FBAY000032	IC	1	(E.S.D)
	IC4803	C1AB00003800	IC	1	(E.S.D) GS
	IC4804	C0FBAY000032	IC	1	(E.S.D)
	IC6000	C0HBB0000057	IC	1	(E.S.D)
	IC6101	C0JBAR000367	IC	1	(E.S.D)
	IC9001	C0JBAS000401	IC	1	(E.S.D)
	IC9002	C0DBZYY00716	IC	1	(E.S.D)
	IC9003	C0DBZYY00716	IC	1	(E.S.D)
			TRANSISTORS		
	Q1001	B1ABCF000176	TRANSISTOR	1	(E.S.D)
	Q1002	B1GBCFJJ0041	TRANSISTOR	1	(E.S.D)
	Q2001	B1ABGC000005	TRANSISTOR	1	(E.S.D)
	Q2002	B1ABGC000005	TRANSISTOR	1	(E.S.D)
	Q2100	B1AAJC000019	TRANSISTOR	1	(E.S.D)

Safety	Ref. No.	Part No.	Part Name & Description	Qty	Remarks
	Q2104	B1ABCF000231	TRANSISTOR	1	(E.S.D)
	Q2106	B1ABCF000231	TRANSISTOR	1	(E.S.D)
	Q2108	B1ABCF000231	TRANSISTOR	1	(E.S.D)
	Q2113	B1BACG000023	TRANSISTOR	1	(E.S.D)
	Q2114	B1GBCFJJ0041	TRANSISTOR	1	(E.S.D)
	Q2115	B1GBCFJJ0041	TRANSISTOR	1	(E.S.D)
	Q2117	B1ADGF000010	TRANSISTOR	1	(E.S.D)
	Q3500	B1ABCF000231	TRANSISTOR	1	(E.S.D)
	Q3501	B1ABCF000231	TRANSISTOR	1	(E.S.D)
	Q3502	B1ADCE000012	TRANSISTOR	1	(E.S.D)
	Q3503	B1ABCF000231	TRANSISTOR	1	(E.S.D)
	Q6000	B1BABG000007	TRANSISTOR	1	(E.S.D)
	Q6001	B1ABMG000008	TRANSISTOR	1	(E.S.D)
	Q9003	B1ADCE000012	TRANSISTOR	1	(E.S.D)
	Q9004	B1ADCE000012	TRANSISTOR	1	(E.S.D)
	Q9005	B1ADCE000012	TRANSISTOR	1	(E.S.D)
	QR1001	B1GBCFJJ0040	TRANSISTOR	1	(E.S.D)
	QR2002	B1GDCFGG0026	TRANSISTOR	1	(E.S.D)
	QR2102	B1GBCFJJ0040	TRANSISTOR	1	(E.S.D)
	QR2103	B1GBCFLL0037	TRANSISTOR	1	(E.S.D)
	QR2502	B1GBCFGN0016	TRANSISTOR	1	(E.S.D)
	QR2503	B1GBCFGN0016	TRANSISTOR	1	(E.S.D)
	QR2505	B1GBCFGN0016	TRANSISTOR	1	(E.S.D)
	QR6000	B1GBCFJJ0051	TRANSISTOR	1	(E.S.D)
	QR6130	B1GBCFJJ0040	TRANSISTOR	1	(E.S.D)
	QR9001	B1GBCFGN0016	TRANSISTOR	1	(E.S.D)
	QR9002	B1GBCFGN0016	TRANSISTOR	1	(E.S.D)
	QR9003	B1GBCFGN0016	TRANSISTOR	1	(E.S.D)
			DIODES		
	D1001	DZ2J130M0L	DIODE	1	(E.S.D)
	D2100	B0ADDJ000032	DIODE	1	(E.S.D)
	D2101	DA2J10100L	DIODE	1	(E.S.D)
	D2104	DZ2J130M0L	DIODE	1	(E.S.D)
	D2106	B0JCPG000032	DIODE	1	(E.S.D)
	D2108	DA2J10100L	DIODE	1	(E.S.D)
	D2109	B0ADDJ000032	DIODE	1	(E.S.D)
	D3000	B0ACCK000005	DIODE	1	(E.S.D)
	D3001	B0ACCK000005	DIODE	1	(E.S.D)
	D6005	B0EAMM000057	DIODE	1	(E.S.D)
	D6006	B0BC033A0282	DIODE	1	(E.S.D)
	D6007	B0EAMM000057	DIODE	1	(E.S.D)
	D6008	B0JAME000114	DIODE	1	(E.S.D)
	D6009	DZ2J24000L	DIODE	1	(E.S.D)
	D6012	B0BC2R4A0006	DIODE	1	(E.S.D)
	D6201	DA2J10100L	DIODE	1	(E.S.D)
	D6202	DA2J10100L	DIODE	1	(E.S.D)
	D6203	DA2J10100L	DIODE	1	(E.S.D)
	D6204	DA2J10100L	DIODE	1	(E.S.D)
	D6205	DA2J10100L	DIODE	1	(E.S.D)
	D6206	DA2J10100L	DIODE	1	(E.S.D)
	D6207	DA2J10100L	DIODE	1	(E.S.D)
	D9000	B3ABA0000187	DIODE	1	(E.S.D)
	D9001	B0ECKM000008	DIODE	1	(E.S.D)
	D9001	B3AGA0000026	DIODE	1	(E.S.D)
	DZ2100	B0JCPG000032	DIODE	1	(E.S.D)
			VARIABLE RESIS-TORS		
	VR1400	EVUF2AF15B14	MIC VOL2/GUITAR	1	
	VR1401	EVUF2AF15B14	MIC VOL1	1	
	VR6100	EVEKE2F3024B	VOLUME	1	
	VR6200	K9AA012Y0012	ILLUMINATION/ CONTROL JOG	1	
			SWITCHES		
	S1400	K0F142A00004	SW MIC/GUITAR	1	
	S6200	EVQ21405RJ	SW POWER	1	
	S6202	EVQ21405RJ	SW STOP	1	
	S6211	EVQ21405RJ	SW SUPER WOOFER	1	

Safety	Ref. No.	Part No.	Part Name & Description	Qty	Remarks
	S6212	EVQ21405RJ	SW LATIN/PRESET EQ	1	
	S6213	EVQ21405RJ	SW MANUAL EQ	1	
	S6214	EVQ21405RJ	SW D.BASS	1	
	S6215	EVQ21405RJ	SW USB REC/PAUSE	1	
	S6216	EVQ21405RJ	SW RWD	1	
	S6217	EVQ21405RJ	SW FWD	1	
	S6218	EVQ21405RJ	SW PLAY/PAUSE	1	
	S6219	EVQ21405RJ	SW AUX	1	
	S6220	EVQ21405RJ	SW USB	1	
	S6221	EVQ21405RJ	SW BT/PAIRING	1	
	S6222	EVQ21405RJ	SW ALBUM/TRACK	1	
	S6223	EVQ21405RJ	SW DJ JUKEBOX	1	
			CONNECTORS		
	CN1401	K1KA06A00452	6P CONNECTOR	1	
	CN1402	K1KA02AA0193	2P CONNECTOR	1	
	CN2101	K1KA02AA0186	2P CONNECTOR	1	
	CN2103	K1KA13AA0181	13P CONNECTOR	1	
	CN2506	K1MN30A00019	30P CONNECTOR	1	
	CN2507	K1KA06A00452	6P CONNECTOR	1	
	CN2508	K1KA04AA0186	4P CONNECTOR	1	
	CN2510	K1KA04AA0193	4P CONNECTOR	1	
	CN2511	K1KA10AA0194	10P CONNECTOR	1	
	CN2604	K1KA04BA0061	4P CONNECTOR	1	
	CN6001	K1MN30A00019	30P CONNECTOR	1	
	CN6002	K1MY12AA0267	12P CONNECTOR	1	
	CN6005	K1MN30A00019	30P CONNECTOR	1	
	CN6006	K1MN30A00019	30P CONNECTOR	1	
	CN6300	K1KA04AA0193	4P CONNECTOR	1	
	CN6400	K1KA04AA0186	4P CONNECTOR	1	
	CN6401	K1KA10AA0194	10P CONNECTOR	1	
	CN9002	K1KA02AA0193	2P CONNECTOR	1	
	P1002	K1MN08A00048	8P CONNECTOR	1	
	JK3502	K1KA04A00629	4P CONNECTOR	1	
	JK3503	K1KA02A00735	2P CONNECTOR	1	
			COILS AND INDUC-TORS		
	L2101	G1C470MA0291	INDUCTOR	1	
	L2106	G0A100H00018	CHOKE COIL	1	
	L3100	G0C100M00009	INDUCTOR	1	
	L3101	G0C100M00009	INDUCTOR	1	
	L3300	G0C100M00009	INDUCTOR	1	
	L3301	G0C100M00009	INDUCTOR	1	
	L6000	J0JBC0000019	INDUCTOR	1	
	L6300	J0JBC0000019	INDUCTOR	1	
	L6301	J0JBC0000019	INDUCTOR	1	
	L6302	J0JBC0000019	INDUCTOR	1	
	LB1001	J0JBC0000010	INDUCTOR	1	
	LB1002	J0JBC0000010	INDUCTOR	1	
	LB1003	J0JBC0000010	INDUCTOR	1	
	LB1004	J0JBC0000010	INDUCTOR	1	
	LB1005	J0JYC0000656	INDUCTOR	1	
	LB1006	J0JBC0000010	INDUCTOR	1	
	LB1007	J0JBC0000010	INDUCTOR	1	
	LB1008	J0JCC0000286	INDUCTOR	1	
	LB1009	J0JCC0000286	INDUCTOR	1	
	LB1012	J0JCC0000286	INDUCTOR	1	
	LB1013	J0JCC0000286	INDUCTOR	1	
	LB1014	J0JCC0000286	INDUCTOR	1	
	LB1015	J0JCC0000286	INDUCTOR	1	
	LB1028	J0JCC0000286	INDUCTOR	1	
	LB1029	J0JCC0000286	INDUCTOR	1	
	LB1030	J0JBC0000010	INDUCTOR	1	
	LB1031	J0JBC0000010	INDUCTOR	1	
	LB1032	J0JBC0000010	INDUCTOR	1	
	LB1033	J0JBC0000010	INDUCTOR	1	
	LB1034	J0JCC0000286	INDUCTOR	1	
	LB1035	J0JCC0000286	INDUCTOR	1	
	LB1036	J0JCC0000286	INDUCTOR	1	
	LB1037	J0JCC0000286	INDUCTOR	1	

Safety	Ref. No.	Part No.	Part Name & Description	Qty	Remarks
	LB1038	J0JCC0000286	INDUCTOR	1	
	LB1039	J0JCC0000286	INDUCTOR	1	
	LB1041	J0JYC0000656	INDUCTOR	1	
	LB1400	J0JBC0000019	INDUCTOR	1	
	LB1404	J0JBC0000019	INDUCTOR	1	
	LB1405	J0JYC0000656	INDUCTOR	1	
	LB1406	J0JYC0000656	INDUCTOR	1	
	LB2100	J0JKB0000020	INDUCTOR	1	
	LB2101	J0JHC0000046	INDUCTOR	1	
	LB2102	J0JHC0000046	INDUCTOR	1	
	LB2103	J0JHC0000046	INDUCTOR	1	
	LB2104	J0JHC0000118	INDUCTOR	1	
	LB2105	J0JHC0000118	INDUCTOR	1	
	LB2106	J0JGC0000063	INDUCTOR	1	
	LB2511	J0JBC0000010	INDUCTOR	1	
	LB2512	J0JBC0000010	INDUCTOR	1	
	LB2513	J0JBC0000010	INDUCTOR	1	
	LB2514	J0JBC0000010	INDUCTOR	1	
	LB2515	J0JBC0000010	INDUCTOR	1	
	LB2516	J0JBC0000010	INDUCTOR	1	
	LB2517	J0JBC0000010	INDUCTOR	1	
	LB2518	J0JBC0000010	INDUCTOR	1	
	LB2519	J0JBC0000010	INDUCTOR	1	
	LB2520	J0JBC0000010	INDUCTOR	1	
	LB2521	J0JBC0000010	INDUCTOR	1	
	LB2522	J0JBC0000010	INDUCTOR	1	
	LB2523	J0JBC0000010	INDUCTOR	1	
	LB2524	J0JBC0000010	INDUCTOR	1	
	LB2525	J0JGC0000063	INDUCTOR	1	
	LB2526	J0JGC0000063	INDUCTOR	1	
	LB2527	J0JGC0000063	INDUCTOR	1	
	LB2530	J0JGC0000063	INDUCTOR	1	
	LB2531	J0JGC0000063	INDUCTOR	1	
	LB2532	J0JGC0000063	INDUCTOR	1	
	LB2533	J0JBC0000010	INDUCTOR	1	
	LB2534	J0JBC0000010	INDUCTOR	1	
	LB2535	J0JBC0000010	INDUCTOR	1	
	LB2536	J0JBC0000010	INDUCTOR	1	
	LB2537	J0JBC0000010	INDUCTOR	1	
	LB2541	J0JBC0000010	INDUCTOR	1	
	LB2542	J0JBC0000010	INDUCTOR	1	
	LB2543	J0JBC0000010	INDUCTOR	1	
	LB2544	J0JBC0000010	INDUCTOR	1	
	LB2545	J0JBC0000010	INDUCTOR	1	
	LB2546	J0JGC0000063	INDUCTOR	1	
	LB4001	J0JBC0000010	INDUCTOR	1	
	LB4002	J0JBC0000010	INDUCTOR	1	
	LB4530	J0JCC0000101	INDUCTOR	1	
	LB4800	D0GB101JA065	INDUCTOR	1	
	LB4801	J0JBC0000010	INDUCTOR	1	GS
	LB4802	J0JBC0000010	INDUCTOR	1	GS
	LB4803	J0JCC0000317	INDUCTOR	1	
	LB4804	J0JCC0000317	INDUCTOR	1	
	LB4805	J0JBC0000010	INDUCTOR	1	
	LB4806	J0JBC0000010	INDUCTOR	1	GS
	LB4807	J0JYC0000656	INDUCTOR	1	GS
	LB6000	G1C4R7MA0172	INDUCTOR	1	
	LB6001	J0JYC0000366	INDUCTOR	1	
	LB6002	J0JYC0000366	INDUCTOR	1	
	LB6003	J0JYC0000366	INDUCTOR	1	
	LB6004	J0JYC0000366	INDUCTOR	1	
	LB6100	J0JBC0000134	INDUCTOR	1	
	LB6101	J0JBC0000134	INDUCTOR	1	
	LB6101	J0JCC0000317	INDUCTOR	1	
	LB6102	J0JCC0000317	INDUCTOR	1	
	LB6400	J0JGC0000063	INDUCTOR	1	
	LB6401	J0JGC0000063	INDUCTOR	1	
	LB6402	J0JBC0000019	INDUCTOR	1	
	LB6403	J0JBC0000019	INDUCTOR	1	
	LB6404	J0JBC0000019	INDUCTOR	1	
	LB6405	J0JBC0000019	INDUCTOR	1	
	LB9001	J0JGC0000063	INDUCTOR	1	
	LB9002	J0JGC0000063	INDUCTOR	1	

Safety	Ref. No.	Part No.	Part Name & Description	Qty	Remarks
	LB9003	J0JYC0000656	INDUCTOR	1	
	R1004	J0JCC0000287	INDUCTOR	1	
	R1005	J0JCC0000287	INDUCTOR	1	
	R1006	J0JCC0000287	INDUCTOR	1	
	R1007	J0JCC0000287	INDUCTOR	1	
	R1008	J0JCC0000287	INDUCTOR	1	
	R1009	J0JCC0000287	INDUCTOR	1	
	R1011	J0JCC0000301	INDUCTOR	1	
	R1012	J0JCC0000301	INDUCTOR	1	
	R1016	J0JCC0000301	INDUCTOR	1	
	R1017	J0JCC0000301	INDUCTOR	1	
	R1018	J0JCC0000301	INDUCTOR	1	
	R1023	J0JCC0000301	INDUCTOR	1	
	R1028	J0JCC0000301	INDUCTOR	1	
	R1048	J0JCC0000301	INDUCTOR	1	
	R1049	J0JCC0000301	INDUCTOR	1	
	R1064	J0JCC0000301	INDUCTOR	1	
	R1065	J0JCC0000301	INDUCTOR	1	
	R1066	J0JCC0000301	INDUCTOR	1	
	R1132	J0JCC0000301	INDUCTOR	1	
	R1133	J0JCC0000301	INDUCTOR	1	
	R1135	J0JCC0000301	INDUCTOR	1	
	R1136	J0JCC0000301	INDUCTOR	1	
	R1137	J0JCC0000301	INDUCTOR	1	
	R1138	J0JCC0000301	INDUCTOR	1	
	R1139	J0JCC0000301	INDUCTOR	1	
	R1420	J0JYC0000656	INDUCTOR	1	
	R1421	J0JYC0000656	INDUCTOR	1	
	R2203	J0JGC0000063	INDUCTOR	1	
	R2211	J0JGC0000063	INDUCTOR	1	
	R4816	J0JCC0000308	INDUCTOR	1	GS
			TRANSFORMER		
	T6000	G4DYA0000214	SWITCHING TRANS-FORMER	1	
			FILTERS		
	T9001	J0ZZB0000182	FILTER	1	
	T9002	J0ZZB0000182	FILTER	1	
			TERMINALS		
	ZJ1001	K9ZZ00001279	EARTH PLATE	1	
	ZJ2100	K9ZZ00001279	EARTH PLATE	1	
			OSCILLATORS		
	X1001	H0J169500036	OSCILLATOR	1	
	X1002	H0A327200191	OSCILLATOR	1	
	X4001	H0J245500110	OSCILLATOR	1	
	X4801	H0J245500110	OSCILLATOR	1	GS
			FL DISPLAY		
	FL6000	A2BB00000184	FL DISPLAY	1	
			JACKS		
	JK1401	K2HB107B0001	JK MIC 1	1	
	JK1403	K2HB107B0001	JK MIC 2/GUITAR	1	
	JK6103	K2HA2YYA0006	JK AUX IN 1	1	
	JK6104	K2HA2YYA0006	JK AUDIO OUT	1	
	JK6301	K2HC1YYB0033	JK AUX IN 2	1	
	JK6400	K1FY104A0042	USB A (PLAY)	1	
	JK6401	K1FY104A0042	USB B (REC/PLAY)	1	
			CHIP JUMPERS		
	K9001	D0GBR00J0004	0 1/10W	1	
	K9002	D0GBR00J0004	0 1/10W	1	
	L3003	D0GFR00J0005	0 1/4W	1	

Safety	Ref. No.	Part No.	Part Name & Description	Qty	Remarks
	LB1040	D0GBR00J0004	0 1/10W	1	GS
	LB2300	D0GBR00J0004	0 1/10W	1	
	W1	ERJ8GEY0R00V	0 1/4W	1	
	W2	ERJ8GEY0R00V	0 1/4W	1	
	W3	ERJ6GEY0R00V	0 1/8W	1	
	W4	ERJ6GEY0R00V	0 1/8W	1	
	W5	ERJ8GEY0R00V	0 1/4W	1	
	W6	ERJ8GEY0R00V	0 1/4W	1	
	W7	ERJ3GEY0R00V	0 1/10W	1	
	W9	ERJ8GEY0R00V	0 1/4W	1	
	W10	ERJ8GEY0R00V	0 1/4W	1	
	W11	ERJ8GEY0R00V	0 1/4W	1	
	W12	ERJ8GEY0R00V	0 1/4W	1	
	W13	ERJ8GEY0R00V	0 1/4W	1	
	W14	ERJ3GEY0R00V	0 1/10W	1	
	W15	ERJ6GEY0R00V	0 1/8W	1	
	W16	ERJ8GEY0R00V	0 1/4W	1	
	W17	ERJ8GEY0R00V	0 1/4W	1	
	W21	ERJ8GEY0R00V	0 1/4W	1	
	W22	ERJ6GEY0R00V	0 1/8W	1	
	W23	ERJ3GEY0R00V	0 1/10W	1	
	W24	ERJ8GEY0R00V	0 1/4W	1	
	W25	ERJ8GEY0R00V	0 1/4W	1	
	W26	ERJ6GEY0R00V	0 1/8W	1	
	W27	ERJ6GEY0R00V	0 1/8W	1	
	W28	ERJ8GEY0R00V	0 1/4W	1	
	W29	ERJ8GEY0R00V	0 1/4W	1	
	W31	ERJ8GEY0R00V	0 1/4W	1	
	W32	ERJ8GEY0R00V	0 1/4W	1	
	W33	ERJ8GEY0R00V	0 1/4W	1	
	W34	ERJ6GEY0R00V	0 1/8W	1	
	W35	ERJ8GEY0R00V	0 1/4W	1	
	W36	ERJ8GEY0R00V	0 1/4W	1	
	W37	ERJ8GEY0R00V	0 1/4W	1	
	W38	ERJ8GEY0R00V	0 1/4W	1	
	W39	ERJ8GEY0R00V	0 1/4W	1	
	W40	ERJ6GEY0R00V	0 1/8W	1	
	W41	ERJ8GEY0R00V	0 1/4W	1	
	W42	ERJ8GEY0R00V	0 1/4W	1	
	W43	ERJ8GEY0R00V	0 1/4W	1	
	W44	ERJ8GEY0R00V	0 1/4W	1	
	W45	ERJ8GEY0R00V	0 1/4W	1	
	W46	ERJ6GEY0R00V	0 1/8W	1	
	W47	ERJ8GEY0R00V	0 1/4W	1	
	W48	ERJ8GEY0R00V	0 1/4W	1	
	W49	ERJ8GEY0R00V	0 1/4W	1	
	W50	ERJ8GEY0R00V	0 1/4W	1	
	W51	ERJ8GEY0R00V	0 1/4W	1	
	W52	ERJ8GEY0R00V	0 1/4W	1	
	W53	ERJ8GEY0R00V	0 1/4W	1	
	W54	ERJ6GEY0R00V	0 1/8W	1	
	W55	ERJ8GEY0R00V	0 1/4W	1	
	W56	ERJ3GEY0R00V	0 1/10W	1	
	W57	ERJ8GEY0R00V	0 1/4W	1	
	W58	ERJ8GEY0R00V	0 1/4W	1	
	W59	ERJ8GEY0R00V	0 1/4W	1	
	W60	ERJ3GEY0R00V	0 1/10W	1	
	W61	ERJ8GEY0R00V	0 1/4W	1	
	W62	ERJ3GEY0R00V	0 1/10W	1	
	W63	ERJ3GEY0R00V	0 1/10W	1	
	W64	ERJ6GEY0R00V	0 1/8W	1	
	W65	ERJ8GEY0R00V	0 1/4W	1	
	W66	ERJ3GEY0R00V	0 1/10W	1	
	W67	ERJ6GEY0R00V	0 1/8W	1	
	W68	ERJ6GEY0R00V	0 1/8W	1	
	W69	ERJ6GEY0R00V	0 1/8W	1	
	W70	ERJ8GEY0R00V	0 1/4W	1	
	W71	ERJ6GEY0R00V	0 1/8W	1	
	W72	ERJ8GEY0R00V	0 1/4W	1	
	W73	ERJ8GEY0R00V	0 1/4W	1	
	W74	ERJ8GEY0R00V	0 1/4W	1	
	W75	ERJ3GEY0R00V	0 1/10W	1	
	W200	ERJ8GEY0R00V	0 1/4W	1	

Safety	Ref. No.	Part No.	Part Name & Description	Qty	Remarks
	W201	ERJ8GEY0R00V	0 1/4W	1	
	W202	ERJ8GEY0R00V	0 1/4W	1	
	W203	ERJ8GEY0R00V	0 1/4W	1	
	W204	ERJ6GEY0R00V	0 1/8W	1	
	W205	ERJ8GEY0R00V	0 1/4W	1	
	W206	ERJ8GEY0R00V	0 1/4W	1	
	W207	ERJ8GEY0R00V	0 1/4W	1	
	W208	ERJ8GEY0R00V	0 1/4W	1	
	W209	ERJ8GEY0R00V	0 1/4W	1	
	W210	ERJ8GEY0R00V	0 1/4W	1	
	W211	ERJ8GEY0R00V	0 1/4W	1	
	W212	ERJ3GEY0R00V	0 1/10W	1	
	W213	ERJ8GEY0R00V	0 1/4W	1	
	W214	ERJ8GEY0R00V	0 1/4W	1	
	W215	ERJ8GEY0R00V	0 1/4W	1	
	W216	ERJ8GEY0R00V	0 1/4W	1	
	W217	ERJ8GEY0R00V	0 1/4W	1	
	W218	ERJ3GEY0R00V	0 1/10W	1	
	W219	ERJ8GEY0R00V	0 1/4W	1	
	W220	ERJ8GEY0R00V	0 1/4W	1	
	W221	ERJ6GEY0R00V	0 1/8W	1	
	W222	ERJ6GEY0R00V	0 1/8W	1	
	W223	ERJ8GEY0R00V	0 1/4W	1	
	W224	ERJ8GEY0R00V	0 1/4W	1	
	W225	ERJ6GEY0R00V	0 1/8W	1	
	W226	ERJ6GEY0R00V	0 1/8W	1	
	W227	ERJ8GEY0R00V	0 1/4W	1	
	W228	ERJ8GEY0R00V	0 1/4W	1	
	W229	ERJ8GEY0R00V	0 1/4W	1	
	W230	ERJ8GEY0R00V	0 1/4W	1	
			REMOTE SENSOR		
	IR6500	B3RAD0000220	REMOTE SENSOR	1	
			RESISTORS		
	R1002	D0GB101JA065	100 1/10W	1	
	R1003	D0GB101JA065	100 1/10W	1	
	R1013	D0GB221JA065	220 1/10W	1	
	R1014	D0GB221JA065	220 1/10W	1	
	R1015	D0GB102JA065	1K 1/10W	1	
	R1022	D0GB221JA065	220 1/10W	1	
	R1024	D0GB101JA065	100 1/10W	1	
	R1025	D0GB105JA065	1M 1/10W	1	
	R1026	D0GB224JA065	220K 1/10W	1	
	R1027	D0GB106JA065	10M 1/10W	1	
	R1029	D0GB103JA065	10K 1/10W	1	
	R1031	D0GB103JA065	10K 1/10W	1	
	R1032	D0GB103JA065	10K 1/10W	1	
	R1033	D0GB153JA065	15K 1/10W	1	PR
	R1033	D0GB272JA065	2.7K 1/10W	1	PH
	R1033	D0GB682JA065	6.8K 1/10W	1	GS
	R1034	D0GB153JA065	15K 1/10W	1	
	R1038	D0GA103JA023	10K 1/16W	1	
	R1043	D0GB103JA065	10K 1/10W	1	
	R1044	D0GB562JA065	5.6K 1/10W	1	
	R1045	D0GB101JA065	100 1/10W	1	
	R1046	D0GBR00J0004	0 1/10W	1	
	R1047	D0GB101JA065	100 1/10W	1	
	R1050	D0GB103JA065	10K 1/10W	1	
	R1051	D0GB103JA065	10K 1/10W	1	
	R1055	D0GB101JA065	100 1/10W	1	
	R1057	D0GB101JA065	100 1/10W	1	
	R1059	D0GB101JA065	100 1/10W	1	
	R1060	D0GB101JA065	100 1/10W	1	
	R1067	ERJ3RBD683V	68K 1/16W	1	
	R1068	ERJ3RBD153V	15K 1/16W	1	
	R1078	D0GB101JA065	100 1/10W	1	
	R1095	D0GB122JA065	1.2K 1/10W	1	
	R1100	D0GB101JA065	100 1/10W	1	
	R1105	D0GB103JA065	10K 1/10W	1	
	R1106	D0GB334JA065	330K 1/10W	1	

Safety	Ref. No.	Part No.	Part Name & Description	Qty	Remarks
	R1107	D0GB222JA065	2.2K 1/10W	1	
	R1108	D0GB222JA065	2.2K 1/10W	1	
	R1111	D0GB332JA065	3.3K 1/10W	1	
	R1112	D0GB683JA065	68K 1/10W	1	
	R1113	D0GB332JA065	3.3K 1/10W	1	
	R1114	D0GB103JA065	10K 1/10W	1	
	R1115	D0GB102JA065	1K 1/10W	1	
	R1116	D0GB103JA065	10K 1/10W	1	
	R1117	D0GB103JA065	10K 1/10W	1	
	R1118	D0GBR00J0004	0 1/10W	1	
	R1119	D0GB103JA065	10K 1/10W	1	
	R1121	D0GB101JA065	100 1/10W	1	
	R1122	D0GB101JA065	100 1/10W	1	
	R1124	D0GB101JA065	100 1/10W	1	
	R1125	D0GB101JA065	100 1/10W	1	
	R1127	D0GB101JA065	100 1/10W	1	
	R1128	D0GB101JA065	100 1/10W	1	
	R1129	D0GB101JA065	100 1/10W	1	
	R1131	D0GB101JA065	100 1/10W	1	
	R1134	D0GB101JA065	100 1/10W	1	
	R1140	D0GB101JA065	100 1/10W	1	
	R1142	D0GB101JA065	100 1/10W	1	
	R1146	D0GB101JA065	100 1/10W	1	GS
	R1147	D0GBR00J0004	0 1/10W	1	
	R1148	D0GBR00J0004	0 1/10W	1	
	R1149	D0GBR00J0004	0 1/10W	1	PH,PR
	R1150	D0GB103JA065	10K 1/10W	1	
	R1153	D0GB473JA065	47K 1/10W	1	
	R1154	D0GB473JA065	47K 1/10W	1	
	R1155	D0GB221JA065	220 1/10W	1	GS
	R1157	D0GB101JA065	100 1/10W	1	GS
	R1401	D0GB153JA065	15K 1/10W	1	
	R1402	D0GB331JA065	330 1/10W	1	
	R1403	D0GB103JA065	10K 1/10W	1	
	R1404	D0GB472JA065	4.7K 1/10W	1	
	R1405	D0GB682JA065	6.8K 1/10W	1	
	R1406	D0GB104JA065	100K 1/10W	1	
	R1407	D0GB471JA065	470 1/10W	1	
	R1408	D0GB681JA065	680 1/10W	1	
	R1409	D0GBR00J0004	0 1/10W	1	
	R1410	D0GBR00J0004	0 1/10W	1	
	R1411	D0GB102JA065	1K 1/10W	1	
	R1412	D0GB681JA065	680 1/10W	1	
	R1413	D0GB681JA065	680 1/10W	1	
	R1414	D0GB331JA065	330 1/10W	1	
	R1415	D0GB153JA065	15K 1/10W	1	
	R1416	D0GB103JA065	10K 1/10W	1	
	R1417	D0GB472JA065	4.7K 1/10W	1	
	R1418	D0GB682JA065	6.8K 1/10W	1	
	R1419	D0GB104JA065	100K 1/10W	1	
	R1423	D0GB681JA065	680 1/10W	1	
	R1424	D0GB273JA065	27K 1/10W	1	
	R1426	D0GBR00J0004	0 1/10W	1	
	R1427	D0GBR00J0004	0 1/10W	1	
	R1428	D0GFR00J0005	0 1/4W	1	
	R1430	D0GB102JA065	1K 1/10W	1	
	R1431	D0GBR00J0004	0 1/10W	1	
	R1432	D0GBR00J0004	0 1/10W	1	
	R1433	D0GBR00J0004	0 1/10W	1	
	R1434	D0GBR00J0004	0 1/10W	1	
	R1435	D0GBR00J0004	0 1/10W	1	
	R1436	D0GB225JA065	2.2M 1/10W	1	
	R1437	D0GB225JA065	2.2M 1/10W	1	
	R2001	D0GB102JA065	1K 1/10W	1	
	R2002	D0GB102JA065	1K 1/10W	1	
	R2004	D0GBR00J0004	0 1/10W	1	
	R2100	D0GBR00J0004	0 1/10W	1	
	R2101	D0GB681JA065	680 1/10W	1	
	R2102	D0GB473JA065	47K 1/10W	1	
	R2103	D0GB123JA065	12K 1/10W	1	
	R2104	D0GBR00J0004	0 1/10W	1	
	R2111	D0GBR00J0004	0 1/10W	1	
	R2114	D1BB3002A074	30K 1/10W	1	

Safety	Ref. No.	Part No.	Part Name & Description	Qty	Remarks
	R2115	D1BB3002A074	30K 1/10W	1	
	R2116	D1BB1002A074	10K 1/10W	1	
	R2123	D0GBR00J0004	0 1/10W	1	GS
	R2124	D0GB123JA065	12K 1/10W	1	
	R2125	D0GB274JA065	270K 1/10W	1	
	R2126	D0GB823JA065	82K 1/10W	1	
	R2127	D0GBR00J0004	0 1/10W	1	PH
	R2129	D0GB682JA065	6.8K 1/10W	1	
	R2130	D0GB221JA065	220 1/10W	1	
	R2134	D1BB3002A074	30K 1/10W	1	
	R2135	F1H1H104B047	0.1uF 50V	1	
	R2137	D0GB101JA065	100 1/10W	1	
	R2141	D0GB474JA065	470K 1/10W	1	
	R2143	D0AF270JA039	27	1	
	R2156	D0GB821JA065	820 1/10W	1	
	R2157	D0GB101JA065	100 1/10W	1	
	R2162	D0GBR00J0004	0 1/10W	1	PR
	R2164	D1BB8202A074	82K 1/10W	1	
	R2165	D1BB1003A074	100K 1/10W	1	
	R2166	D1BB1002A074	10K 1/10W	1	
	R2167	D0GB153JA065	15K 1/10W	1	
	R2168	D1BB3002A074	30K 1/10W	1	
	R2180	D1BB2702A074	27K 1/10W	1	
	R2182	D1BB3002A074	30K 1/10W	1	
	R2200	D0GB472JA065	4.7K 1/10W	1	
	R2201	D0GB472JA065	4.7K 1/10W	1	
	R2202	D0GB103JA065	10K 1/10W	1	
	R2215	D0GDR00J0004	0 1/8W	1	
	R2216	D0GDR00J0004	0 1/8W	1	
	R2219	D0GBR00J0004	0 1/10W	1	
	R2220	D0GBR00J0004	0 1/10W	1	
	R2227	D0GFR00J0005	0 1/4W	1	
	R2233	D0GBR00J0004	0 1/10W	1	
	R2234	D0GBR00J0004	0 1/10W	1	
	R2235	D0GB222JA065	2.2K 1/10W	1	
	R2237	D0GB222JA065	2.2K 1/10W	1	
	R2240	D0GB4R7JA065	4.7 1/10W	1	
	R2241	D0GFR00J0005	0 1/4W	1	
	R2243	D0GB4R7JA065	4.7 1/10W	1	
	R2244	D0GFR00J0005	0 1/4W	1	
	R2245	D0GFR00J0005	0 1/4W	1	
	R2301	D0GB103JA065	10K 1/10W	1	
	R2303	D0GB103JA065	10K 1/10W	1	
	R2333	D0GA103JA023	10K 1/16W	1	
	R2502	D0GBR00J0004	0 1/10W	1	
	R2503	D0GB102JA065	1K 1/10W	1	
	R2504	D0GBR00J0004	0 1/10W	1	
	R2505	D0GBR00J0004	0 1/10W	1	
	R2507	D0GB472JA065	4.7K 1/10W	1	
	R2520	D0GBR00J0004	0 1/10W	1	
	R2544	D0GBR00J0004	0 1/10W	1	
	R2546	D0GBR00J0004	0 1/10W	1	
	R2550	D0GBR00J0004	0 1/10W	1	
	R2553	D0GBR00J0004	0 1/10W	1	
	R2554	D0GBR00J0004	0 1/10W	1	
	R2555	D0GBR00J0004	0 1/10W	1	
	R2556	D0GBR00J0004	0 1/10W	1	
	R3016	D0GBR00J0004	0 1/10W	1	
	R3017	D0GBR00J0004	0 1/10W	1	
	R3018	D0GBR00J0004	0 1/10W	1	
	R3019	D0GBR00J0004	0 1/10W	1	
	R3100	D0GB100JA065	10 1/10W	1	
	R3101	D0GB100JA065	10 1/10W	1	
	R3102	D0GB223JA065	22K 1/10W	1	
	R3103	D0GB101JA065	100 1/10W	1	
	R3104	D0GBR00J0004	0 1/10W	1	
	R3105	D0GB100JA065	10 1/10W	1	
	R3106	D0GD220JA052	22 1/8W	1	
	R3107	D0GD220JA052	22 1/8W	1	
	R3108	D0GD220JA052	22 1/8W	1	
	R3109	D0GD220JA052	22 1/8W	1	
	R3110	D0GBR00J0004	0 1/10W	1	
	R3111	D0GBR00J0004	0 1/10W	1	

Safety	Ref. No.	Part No.	Part Name & Description		Qty	Remarks
	R3113	D0GBR00J0004	0	1/10W	1	
	R3115	D0GBR00J0004	0	1/10W	1	
	R3117	D0GB101JA065	100	1/10W	1	
	R3118	D0GBR00J0004	0	1/10W	1	
	R3119	D0GB101JA065	100	1/10W	1	
	R3120	D0GD220JA052	22	1/8W	1	
	R3121	D0GD220JA052	22	1/8W	1	
	R3122	D0GD220JA052	22	1/8W	1	
	R3123	D0GD220JA052	22	1/8W	1	
	R3210	D0GBR00J0004	0	1/10W	1	
	R3211	D0GBR00J0004	0	1/10W	1	
	R3300	D0GB100JA065	10	1/10W	1	
	R3301	D0GB100JA065	10	1/10W	1	
	R3302	D0GB223JA065	22K	1/10W	1	
	R3303	D0GB101JA065	100	1/10W	1	
	R3305	D0GB101JA065	100	1/10W	1	
	R3307	D0GBR00J0004	0	1/10W	1	
	R3311	D0GB100JA065	10	1/10W	1	
	R3312	D0GD220JA052	22	1/8W	1	
	R3313	D0GD220JA052	22	1/8W	1	
	R3314	D0GD220JA052	22	1/8W	1	
	R3315	D0GD220JA052	22	1/8W	1	
	R3316	D0GBR00J0004	0	1/10W	1	
	R3317	D0GBR00J0004	0	1/10W	1	
	R3318	D0GBR00J0004	0	1/10W	1	
	R3319	D0GBR00J0004	0	1/10W	1	
	R3320	D0GD220JA052	22	1/8W	1	
	R3321	D0GD220JA052	22	1/8W	1	
	R3322	D0GD220JA052	22	1/8W	1	
	R3323	D0GD220JA052	22	1/8W	1	
	R3500	D0GBR00J0004	0	1/10W	1	
	R3505	D0GB104JA065	100K	1/10W	1	
	R3506	D0GB104JA065	100K	1/10W	1	
	R3507	D0GB104JA065	100K	1/10W	1	
	R3508	D0GB104JA065	100K	1/10W	1	
	R3509	D0GB3R3JA065	3.3	1/10W	1	
	R3510	D0GB3R3JA065	3.3	1/10W	1	
	R3511	D0GB3R3JA065	3.3	1/10W	1	
	R3512	D0GB3R3JA065	3.3	1/10W	1	
	R3513	D0GB104JA065	100K	1/10W	1	
	R3514	D0GB104JA065	100K	1/10W	1	
	R3515	D0GB3R3JA065	3.3	1/10W	1	
	R3516	D0GB3R3JA065	3.3	1/10W	1	
	R3526	D0GB183JA065	18K	1/10W	1	
	R3528	D0GB183JA065	18K	1/10W	1	
	R3529	D0GB183JA065	18K	1/10W	1	
	R3533	D0GB822JA065	8.2K	1/10W	1	
	R3534	D0GB223JA065	22K	1/10W	1	
	R3535	D0GB104JA065	100K	1/10W	1	
	R3536	D0GB104JA065	100K	1/10W	1	
	R3537	D0GB472JA065	4.7K	1/10W	1	
	R4000	D0GBR00J0004	0	1/10W	1	
	R4001	D0GB152JA065	1.5K	1/10W	1	
	R4002	D0GB105JA065	1M	1/10W	1	
	R4003	D0GAR00J0005	0	1/16W	1	
	R4004	D0GAR00J0005	0	1/16W	1	
	R4005	D0GAR00J0005	0	1/16W	1	
	R4006	D0GAR00J0005	0	1/16W	1	
	R4007	D0GB101JA065	100	1/10W	1	
	R4008	D0GB101JA065	100	1/10W	1	
	R4011	D0GB101JA065	100	1/10W	1	
	R4012	D0GB101JA065	100	1/10W	1	
	R4013	D0GB101JA065	100	1/10W	1	
	R4014	D0GB101JA065	100	1/10W	1	
	R4024	D0GA103JA023	10K	1/16W	1	
	R4025	D0GB101JA065	100	1/10W	1	
	R4026	D0GB101JA065	100	1/10W	1	
	R4029	D0GB101JA065	100	1/10W	1	
	R4030	D0GB101JA065	100	1/10W	1	
	R4031	D0GB101JA065	100	1/10W	1	
	R4035	D0GB101JA065	100	1/10W	1	
	R4048	D0GB681JA065	680	1/10W	1	
	R4049	D0GB104JA065	100K	1/10W	1	

Safety	Ref. No.	Part No.	Part Name & Description		Qty	Remarks
	R4105	D0GA101JA023	100	1/16W	1	
	R4581	D0GB221JA065	220	1/10W	1	
	R4589	D0GBR00J0004	0	1/10W	1	
	R4801	D0GB152JA065	1.5K	1/10W	1	GS
	R4802	D0GB105JA065	1M	1/10W	1	GS
	R4803	D0GA473JA023	47K	1/16W	1	GS
	R4804	D0GA473JA023	47K	1/16W	1	GS
	R4805	D0GA103JA023	10K	1/16W	1	GS
	R4806	D0GA103JA023	10K	1/16W	1	GS
	R4807	D0GA103JA023	10K	1/16W	1	GS
	R4808	D0GA221JA023	220	1/16W	1	GS
	R4809	D0GA330JA023	33	1/16W	1	GS
	R4810	D0GA330JA023	33	1/16W	1	GS
	R4811	D0GA221JA023	220	1/16W	1	GS
	R4812	D0GA221JA023	220	1/16W	1	PH,PR
	R4820	D0GB102JA065	1K	1/10W	1	
	R4821	D0GB102JA065	1K	1/10W	1	
	R4822	D0GB103JA065	10K	1/10W	1	
	R4823	D0GB103JA065	10K	1/10W	1	
	R4824	D0GB473JA065	47K	1/10W	1	
	R4830	D0GB473JA065	47K	1/10W	1	
	R4831	D0GB473JA065	47K	1/10W	1	
	R4832	D0GB221JA065	220	1/10W	1	
	R4833	D0GB221JA065	220	1/10W	1	
	R4836	D0GB102JA065	1K	1/10W	1	
	R4837	D0GB102JA065	1K	1/10W	1	
	R4838	D0GB103JA065	10K	1/10W	1	
	R4839	D0GB473JA065	47K	1/10W	1	
	R4840	D0GB332JA065	3.3K	1/10W	1	
	R4841	D0GB103JA065	10K	1/10W	1	
	R4843	D0GB332JA065	3.3K	1/10W	1	
	R4844	D0GA221JA023	220	1/16W	1	PH,PR
	R4845	D0GA221JA023	220	1/16W	1	PH,PR
	R4846	D0GB102JA065	1K	1/10W	1	
	R4847	D0GB102JA065	1K	1/10W	1	
	R4848	D0GB221JA065	220	1/10W	1	
	R4849	D0GB221JA065	220	1/10W	1	
	R4850	D0GB221JA065	220	1/10W	1	
	R4851	D0GB221JA065	220	1/10W	1	
	R4852	D0GB221JA065	220	1/10W	1	
	R4853	D0GB221JA065	220	1/10W	1	
	R4854	D0GB221JA065	220	1/10W	1	
	R4855	D0GA221JA023	220	1/16W	1	PH,PR
	R4856	D0GA101JA023	100	1/16W	1	
	R4857	D0GA221JA023	220	1/16W	1	PH,PR
	R4858	D0GAR00J0005	0	1/16W	1	GS
	R4859	D0GA221JA023	220	1/16W	1	GS
	R4860	D0GA221JA023	220	1/16W	1	GS
	R4861	D0GA221JA023	220	1/16W	1	GS
	R4862	D0GA221JA023	220	1/16W	1	GS
	R4864	D0GBR00J0004	0	1/10W	1	GS
	R4865	D0GBR00J0004	0	1/10W	1	GS
	R4866	D0GBR00J0004	0	1/10W	1	
	R6000	D0GB272JA065	2.7K	1/10W	1	
	R6001	D0GB470JA065	47	1/10W	1	
	R6002	D0GB101JA065	100	1/10W	1	
	R6003	D0GB181JA065	180	1/10W	1	
	R6004	D0GB681JA065	680	1/10W	1	
	R6005	D0GB181JA065	180	1/10W	1	
	R6006	D0GB103JA065	10K	1/10W	1	
	R6007	D0GB103JA065	10K	1/10W	1	
	R6008	D0GB103JA065	10K	1/10W	1	
	R6009	D0GB103JA065	10K	1/10W	1	
	R6012	D0GB331JA065	330	1/10W	1	
	R6016	D0GB221JA065	220	1/10W	1	
	R6017	D0GB471JA065	470	1/10W	1	
	R6018	D0GB221JA065	220	1/10W	1	
	R6023	D0GB823JA065	82K	1/10W	1	
	R6025	D0GB562JA065	5.6K	1/10W	1	
	R6026	D0GB220JA065	22	1/10W	1	
	R6028	D0GB1R0JA065	1.0	1/10W	1	
	R6029	D0GB473JA065	47K	1/10W	1	
	R6030	D0GB1R0JA065	1.0	1/10W	1	

Safety	Ref. No.	Part No.	Part Name & Description	Qty	Remarks
	R6032	D0GB100JA065	10 1/10W	1	
	R6033	D0GB223JA065	22K 1/10W	1	
	R6035	D0GB272JA065	2.7K 1/10W	1	
	R6037	D0GBR00J0004	0 1/10W	1	
	R6038	D0GB103JA065	10K 1/10W	1	
	R6102	D0GBR00J0004	0 1/10W	1	
	R6103	D0GBR00J0004	0 1/10W	1	
	R6109	D0GB103JA065	10K 1/10W	1	
	R6110	D0GB103JA065	10K 1/10W	1	
	R6127	D0GB221JA065	220 1/10W	1	
	R6128	D0GB221JA065	220 1/10W	1	
	R6129	D0GB102JA065	1K 1/10W	1	
	R6130	D0GB102JA065	1K 1/10W	1	
	R6131	D0GB221JA065	220 1/10W	1	
	R6131	D0GB472JA065	4.7K 1/10W	1	
	R6132	D0GB221JA065	220 1/10W	1	
	R6132	D0GB472JA065	4.7K 1/10W	1	
	R6133	D0GB221JA065	220 1/10W	1	
	R6133	D0GB472JA065	4.7K 1/10W	1	
	R6134	D0GB221JA065	220 1/10W	1	
	R6134	D0GB472JA065	4.7K 1/10W	1	
	R6135	D0GB102JA065	1K 1/10W	1	
	R6135	D0GB221JA065	220 1/10W	1	
	R6136	D0GB102JA065	1K 1/10W	1	
	R6136	D0GFR00J0005	0 1/4W	1	
	R6137	D0GB103JA065	10K 1/10W	1	
	R6137	D0GBR00J0004	0 1/10W	1	
	R6138	D0GB153JA065	15K 1/10W	1	
	R6139	D0GB153JA065	15K 1/10W	1	
	R6140	D0GB473JA065	47K 1/10W	1	
	R6142	D0GB103JA065	10K 1/10W	1	
	R6143	D0GB103JA065	10K 1/10W	1	
	R6144	D0GB153JA065	15K 1/10W	1	
	R6145	D0GB153JA065	15K 1/10W	1	
	R6146	D0GB473JA065	47K 1/10W	1	
	R6147	D0GB102JA065	1K 1/10W	1	
	R6148	D0GB102JA065	1K 1/10W	1	
	R6150	D0GBR00J0004	0 1/10W	1	
	R6151	D0GB473JA065	47K 1/10W	1	
	R6152	D0GBR00J0004	0 1/10W	1	
	R6153	D0GB473JA065	47K 1/10W	1	
	R6208	D0GB103JA065	10K 1/10W	1	
	R6209	D0GB103JA065	10K 1/10W	1	
	R9000	D0GB120JA065	12 1/10W	1	
	R9001	D0GB120JA065	12 1/10W	1	
	R9002	D0GB120JA065	12 1/10W	1	
	R9003	D0GB222JA065	2.2K 1/10W	1	
	R9003	D0GB474JA065	470K 1/10W	1	
	R9004	D0GB474JA065	470K 1/10W	1	
	R9005	D0GBR00J0004	0 1/10W	1	
	R9006	D0GB100JA065	10 1/10W	1	
	R9006	D0GB331JA065	330 1/10W	1	
	R9007	D0GB104JA065	100K 1/10W	1	
	R9008	D0GB331JA065	330 1/10W	1	
	R9009	D0GB104JA065	100K 1/10W	1	
	R9010	D0GB331JA065	330 1/10W	1	
	R9011	D0GB104JA065	100K 1/10W	1	
	R9016	D0GBR00J0004	0 1/10W	1	
	R9017	D0GB474JA065	470K 1/10W	1	
	R9018	D0GB474JA065	470K 1/10W	1	
			RESISTOR NET-WORKS		
	RX4801	D1H82214A042	RESISTOR NETWORK	1	GS
	RX4803	D1H82214A042	RESISTOR NETWORK	1	
	RX4804	D1H83304A042	RESISTOR NETWORK	1	
	RX4805	D1H81014A042	RESISTOR NETWORK	1	
			CAPACITORS		
	C1001	F1H1C104A178	0.1uF 16V	1	
	C1002	F1H1C104A178	0.1uF 16V	1	

Safety	Ref. No.	Part No.	Part Name & Description	Qty	Remarks
	C1003	F1H1C104A178	0.1uF 16V	1	
	C1004	F1H1C104A178	0.1uF 16V	1	
	C1005	F1H1C104A178	0.1uF 16V	1	
	C1006	F1H1C104A178	0.1uF 16V	1	
	C1007	F1H1C104A178	0.1uF 16V	1	
	C1008	F1H1C104A178	0.1uF 16V	1	
	C1009	F1H1C104A178	0.1uF 16V	1	
	C1010	F1H1C104A178	0.1uF 16V	1	
	C1016	F1H1H681B052	680pF 50V	1	
	C1017	F2A0J331A183	330uF 6.3V	1	
	C1019	F1H1C104A178	0.1uF 16V	1	
	C1020	F1H0J1060006	10uF 6.3V	1	
	C1021	F1H0J1060006	10uF 6.3V	1	
	C1022	F1H0J1060006	10uF 6.3V	1	
	C1023	F1H0J1060006	10uF 6.3V	1	
	C1024	F1H0J1060006	10uF 6.3V	1	
	C1025	F1H0J1060012	10uF 6.3V	1	
	C1026	F1H1H9R0A920	9pF 50V	1	
	C1027	F1H1H9R0A920	9pF 50V	1	
	C1028	F1H1H220B052	22pF 50V	1	
	C1029	F1H1H270B052	27pF 50V	1	
	C1030	F1H1H101B052	100pF 50V	1	
	C1031	F1H1H102B047	1000pF 50V	1	
	C1032	F1H1H102B047	1000pF 50V	1	
	C1033	F1H1H102B047	1000pF 50V	1	
	C1034	F1H1H102B047	1000pF 50V	1	
	C1035	F1H1H102B047	1000pF 50V	1	
	C1036	F1H1H102B047	1000pF 50V	1	
	C1039	F2A1C330A243	33uF 16V	1	
	C1040	F1H1C104A178	0.1uF 16V	1	
	C1041	F1H1C104A178	0.1uF 16V	1	
	C1042	F1H1A334A036	0.33uF 10V	1	
	C1043	F1H1E223A161	0.022uF 25V	1	
	C1046	F1H1A225A051	2.2uF 10V	1	
	C1047	F1H1C104A178	0.1uF 16V	1	
	C1048	F1H1C104A178	0.1uF 16V	1	GS
	C1060	F1H1H102A219	1000pF 50V	1	
	C1400	F1H1H102B047	1000pF 50V	1	
	C1401	F2A1H4R7A213	4.7uF 50V	1	
	C1402	F1H1H470B052	47pF 50V	1	
	C1403	F2A1HR10A015	0.10uF 50V	1	
	C1404	F2A1H4R7A218	4.7uF 50V	1	
	C1406	F2A1H1R0A213	1.0uF 50V	1	
	C1407	F1H1H222B047	2200pF 50V	1	
	C1408	F2A1H1R0A213	1.0uF 50V	1	
	C1409	F1H1H472A219	4700pF 50V	1	
	C1410	F1H1H104B047	0.1uF 50V	1	
	C1411	F2A1C100A207	10uF 16V	1	
	C1412	F2A1C100A234	10uF 16V	1	
	C1413	F2A1H1R0A213	1.0uF 50V	1	
	C1415	F2A1HR10A015	0.10uF 50V	1	
	C1416	F1H1H103B047	0.01uF 50V	1	
	C1417	F1H1H102B047	1000pF 50V	1	
	C1424	F2A1H1R0A213	1.0uF 50V	1	
	C1425	F1H1H222B047	2200pF 50V	1	
	C1426	F2A1H1R0A213	1.0uF 50V	1	
	C1428	F2A1H4R7A218	4.7uF 50V	1	
	C1429	F2A1HR10A015	0.10uF 50V	1	
	C1430	F1H1H470B052	47pF 50V	1	
	C1431	F1H1H472A219	4700pF 50V	1	
	C1432	F2A1H4R7A213	4.7uF 50V	1	
	C1433	F1H1H104B047	0.1uF 50V	1	
	C1434	F2A1C100A207	10uF 16V	1	
	C1435	F2A1C100A234	10uF 16V	1	
	C1436	F2A1H1R0A213	1.0uF 50V	1	
	C1438	F2A1HR10A015	0.10uF 50V	1	
	C1439	F1H1H103B047	0.01uF 50V	1	
	C1440	F1H1H332B047	3300pF 50V	1	
	C1442	F1H1H333B047	0.033uF 50V	1	
	C1443	F1H1H102B047	1000pF 50V	1	
	C2100	F1J1A106A024	10uF 10V	1	
	C2101	F1J1A106A024	10uF 10V	1	
	C2103	F1H1H104B047	0.1uF 50V	1	

Safety	Ref. No.	Part No.	Part Name & Description	Qty	Remarks
	C2104	F1J1A106A024	10uF 10V	1	
	C2106	F1H1H104B047	0.1uF 50V	1	
	C2107	F2A1A221B161	220uF 10V	1	
	C2109	F2A1A101B138	100uF 10V	1	
	C2110	F1J1A106A024	10uF 10V	1	
	C2111	F1H1H470B052	47pF 50V	1	
	C2112	F1H1H821B052	820pF 50V	1	
	C2113	F2A0J101A181	100uF 6.3V	1	
	C2115	F2A1E101B416	100uF 25V	1	
	C2116	F1H1H104B047	0.1uF 50V	1	
	C2117	F1H1H104B047	0.1uF 50V	1	
	C2118	F1H1E105A153	1uF 25V	1	
	C2121	F1J1A106A024	10uF 10V	1	
	C2122	F1H1H103B047	0.01uF 50V	1	
	C2123	F1K1H475A256	4.7uF 50V	1	
	C2124	F2A0J221B034	220uF 6.3V	1	
	C2126	F1H1H104B047	0.1uF 50V	1	
	C2128	F1K1H475A256	4.7uF 50V	1	
	C2134	F1H1H103B047	0.01uF 50V	1	
	C2135	F2A1C221B456	220uF 16V	1	
	C2136	F1H1H103B047	0.01uF 50V	1	
	C2137	F2A1H1020067	1000uF 50V	1	
	C2138	F1H1H102B047	1000pF 50V	1	
	C2139	F1H1H103B047	0.01uF 50V	1	
	C2140	F1H1H470B052	47pF 50V	1	
	C2141	F1K1E1060009	10uF 25V	1	
	C2142	F1K1E1060009	10uF 25V	1	
	C2143	F2A0J102A247	1000uF 6.3V	1	
	C2144	F1H1H104B047	0.1uF 50V	1	
	C2145	F1H1H104B047	0.1uF 50V	1	
	C2164	F1H1A105A113	1uF 10V	1	
	C2165	F1H1A105A113	1uF 10V	1	
	C2167	F1J1A106A024	10uF 10V	1	
	C2168	F1J1A106A024	10uF 10V	1	
	C2170	F2A0J102A247	1000uF 6.3V	1	
	C2171	F2A1H4710072	470uF 50V	1	
	C2174	F1H1H104B047	0.1uF 50V	1	
	C2175	F1H1H681B052	680pF 50V	1	
	C2176	F1H1H104B047	0.1uF 50V	1	
	C2177	F1H1H104B047	0.1uF 50V	1	
	C2178	F1H1H104B047	0.1uF 50V	1	
	C2179	F1H1H104B047	0.1uF 50V	1	
	C2182	F1H1H104B047	0.1uF 50V	1	
	C2183	F1H1H104B047	0.1uF 50V	1	
	C2184	F1H1H681B052	680pF 50V	1	
	C2185	F1H1H102A219	1000pF 50V	1	
	C2186	F1H1H102A219	1000pF 50V	1	
	C2500	F1H1H221B047	220pF 50V	1	
	C2501	F1H1H221B047	220pF 50V	1	
	C2502	F1H1H102B047	1000pF 50V	1	
	C2503	F1H1H102B047	1000pF 50V	1	
	C2504	F1H1A105A113	1uF 10V	1	
	C2505	F1H1A105A113	1uF 10V	1	
	C2506	F1H1H102B047	1000pF 50V	1	
	C2507	F1H1H102B047	1000pF 50V	1	
	C2509	F1H1H102A831	1000pF 50V	1	
	C2510	F1H1H102A831	1000pF 50V	1	
	C2511	F1H1H102A831	1000pF 50V	1	
	C2512	F1H1H102A831	1000pF 50V	1	
	C2513	F1H1H102A831	1000pF 50V	1	
	C2529	F1H1H102B047	1000pF 50V	1	
	C2533	F1H1H102B047	1000pF 50V	1	
	C2534	F1H1H104B047	0.1uF 50V	1	
	C2535	F1H1H104B047	0.1uF 50V	1	
	C2536	F1H1H104B047	0.1uF 50V	1	
	C2537	F1H1H104B047	0.1uF 50V	1	
	C2662	D0GBR00J0004	0 1/10W	1	
	C3000	F2A1C330B453	33uF 16V	1	
	C3100	F1J1C1060006	10uF 16V	1	
	C3101	F1H1H104B047	0.1uF 50V	1	
	C3102	F1H1H104B047	0.1uF 50V	1	
	C3103	F1H1H104B047	0.1uF 50V	1	
	C3104	F1H1H104B047	0.1uF 50V	1	

Safety	Ref. No.	Part No.	Part Name & Description	Qty	Remarks
	C3105	F1H1H104B047	0.1uF 50V	1	
	C3106	F1H1H104B047	0.1uF 50V	1	
	C3107	F1H1H333B055	0.033uF 50V	1	
	C3108	F1H1H333B055	0.033uF 50V	1	
	C3109	F1H1H102B047	1000pF 50V	1	
	C3110	F1H1H102B047	1000pF 50V	1	
	C3111	F1H1H104B047	0.1uF 50V	1	
	C3112	F1K1H105A250	1uF 50V	1	
	C3113	F1K1H105A250	1uF 50V	1	
	C3117	F1H1H104B047	0.1uF 50V	1	
	C3118	F1K1H105A250	1uF 50V	1	
	C3119	F1K1H105A250	1uF 50V	1	
	C3120	F1H1H102B047	1000pF 50V	1	
	C3121	F1H1H102B047	1000pF 50V	1	
	C3122	F1H1H333B055	0.033uF 50V	1	
	C3123	F1H1H333B055	0.033uF 50V	1	
	C3301	F1J1C106A059	10uF 16V	1	
	C3302	F1H1H104B047	0.1uF 50V	1	
	C3303	F1H1H104B047	0.1uF 50V	1	
	C3304	F1H1H104B047	0.1uF 50V	1	
	C3305	F1H1H104B047	0.1uF 50V	1	
	C3306	F1H1H104B047	0.1uF 50V	1	
	C3307	F1H1H104B047	0.1uF 50V	1	
	C3308	F1H1H333B055	0.033uF 50V	1	
	C3309	F1H1H333B055	0.033uF 50V	1	
	C3310	F1H1H104B047	0.1uF 50V	1	
	C3311	F1K1H105A250	1uF 50V	1	
	C3312	F1K1H105A250	1uF 50V	1	
	C3313	F1H1H102B047	1000pF 50V	1	
	C3314	F1H1H102B047	1000pF 50V	1	
	C3318	F1H1H104B047	0.1uF 50V	1	
	C3319	F1K1H105A250	1uF 50V	1	
	C3320	F1K1H105A250	1uF 50V	1	
	C3321	F1H1H102B047	1000pF 50V	1	
	C3322	F1H1H102B047	1000pF 50V	1	
	C3326	F1H1H333B055	0.033uF 50V	1	
	C3327	F1H1H333B055	0.033uF 50V	1	
	C3501	F1H1H102B047	1000pF 50V	1	
	C3502	F1H1H102B047	1000pF 50V	1	
	C3503	F1H1H102B047	1000pF 50V	1	
	C3504	F1H1H102B047	1000pF 50V	1	
	C3508	F1H1H102B047	1000pF 50V	1	
	C3509	F1H1H102B047	1000pF 50V	1	
	C3519	F1H1H104B047	0.1uF 50V	1	
	C3520	F1H1H104B047	0.1uF 50V	1	
	C3521	F1H1H104B047	0.1uF 50V	1	
	C3522	F1H1H104B047	0.1uF 50V	1	
	C3523	F1H1H104B047	0.1uF 50V	1	
	C3524	F1H1H104B047	0.1uF 50V	1	
	C3525	F1H1H104B047	0.1uF 50V	1	
	C3526	F1H1H104B047	0.1uF 50V	1	
	C3527	F1H1H104B047	0.1uF 50V	1	
	C3528	F1H1H104B047	0.1uF 50V	1	
	C3529	F1H1H104B047	0.1uF 50V	1	
	C3530	F1H1H104B047	0.1uF 50V	1	
	C3548	D0GBR00J0004	0 1/10W	1	
	C3549	F1J1A106A043	10uF 10V	1	
	C3550	F1J1A106A043	10uF 10V	1	
	C3551	F1H1E105A153	1uF 25V	1	
	C3557	ECQV1H105JL3	1uF 50V	1	
	C3558	ECQV1H105JL3	1uF 50V	1	
	C3559	ECQV1H105JL3	1uF 50V	1	
	C3560	ECQV1H105JL3	1uF 50V	1	
	C3561	ECQV1H105JL3	1uF 50V	1	
	C3562	ECQV1H105JL3	1uF 50V	1	
	C3568	F1K2A224A016	0.22uF 100V	1	
	C3570	F1K2A224A016	0.22uF 100V	1	
	C3571	F1K2A224A016	0.22uF 100V	1	
	C4002	F1H0J105A051	1uF 6.3V	1	
	C4003	F1H0J105A051	1uF 6.3V	1	
	C4004	F1H1C474A178	0.47uF 16V	1	
	C4005	F1H1H150B052	15pF 50V	1	
	C4006	F1H1H150B052	15pF 50V	1	

Safety	Ref. No.	Part No.	Part Name & Description	Qty	Remarks
	C4007	F1H0J105A051	1uF 6.3V	1	
	C4008	F1H0J105A051	1uF 6.3V	1	
	C4009	F1H0J105A051	1uF 6.3V	1	
	C4010	F1H1H102B047	1000pF 50V	1	
	C4011	F1H1H102B047	1000pF 50V	1	
	C4014	F1H0J1060012	10uF 6.3V	1	
	C4015	F1H0J1060012	10uF 6.3V	1	
	C4016	F1H0J1060012	10uF 6.3V	1	
	C4017	F1H0J1060012	10uF 6.3V	1	
	C4018	F2A1C470A155	47uF 16V	1	
	C4019	F2A1C220A243	22uF 16V	1	
	C4020	F2A1C220A243	22uF 16V	1	
	C4041	F1H1H473A748	0.047uF 50V	1	
	C4042	F1H1H473A748	0.047uF 50V	1	
	C4043	F1H1H473A748	0.047uF 50V	1	
	C4044	F1H1H473A748	0.047uF 50V	1	
	C4454	F1H1H104B047	0.1uF 50V	1	
	C4455	F1H1H104B047	0.1uF 50V	1	
	C4456	F1H1H104B047	0.1uF 50V	1	
	C4458	F1H1H104B047	0.1uF 50V	1	
	C4459	F1H1A105A113	1uF 10V	1	
	C4460	F1H1A105A113	1uF 10V	1	
	C4582	F1H1A105A113	1uF 10V	1	
	C4801	F1H0J1060006	10uF 6.3V	1	GS
	C4802	F1H1H102B047	1000pF 50V	1	GS
	C4803	F1H0J1060006	10uF 6.3V	1	GS
	C4804	F1H1C104A041	0.1uF 16V	1	GS
	C4805	F1H0J1060006	10uF 6.3V	1	GS
	C4806	F1H1H101B052	100pF 50V	1	GS
	C4807	F1H0J1060006	10uF 6.3V	1	GS
	C4808	F1H1A105A028	1uF 10V	1	GS
	C4809	F1H1H1200004	12pF 50V	1	GS
	C4810	F1H1H1500009	15pF 50V	1	GS
	C4811	F1H1H102B047	1000pF 50V	1	GS
	C4812	F1H1H102B047	1000pF 50V	1	GS
	C4815	F1H1C104A041	0.1uF 16V	1	GS
	C4826	F1H1A105A028	1uF 10V	1	GS
	C4827	F1H1A105A028	1uF 10V	1	GS
	C4828	F1H1A105A113	1uF 10V	1	
	C4829	F1H1E105A153	1uF 25V	1	
	C4830	F1H1A4750001	4.7uF 10V	1	
	C4831	F1H1A4750001	4.7uF 10V	1	
	C4832	F1H1H470B052	47pF 50V	1	
	C4833	F1H1H470B052	47pF 50V	1	
	C4834	F1H1H470B052	47pF 50V	1	
	C4835	F1H1H470B052	47pF 50V	1	
	C4836	F1H1A4750001	4.7uF 10V	1	
	C4837	F1H1A4750001	4.7uF 10V	1	
	C4838	F1H1A105A113	1uF 10V	1	
	C4839	F1H1A105A113	1uF 10V	1	
	C4840	F1H1A105A113	1uF 10V	1	
	C4841	F1H1A105A113	1uF 10V	1	
	C4842	F1H1H222B047	2200pF 50V	1	
	C4843	F1H1H222B047	2200pF 50V	1	
	C4844	F1H0J1060006	10uF 6.3V	1	
	C4845	F1H1H104B047	0.1uF 50V	1	
	C4846	F1H1H104B047	0.1uF 50V	1	
	C4847	F1H1H104B047	0.1uF 50V	1	
	C4848	F1H0J1060006	10uF 6.3V	1	
	C4849	F1H0J1060006	10uF 6.3V	1	
	C4850	F1H1A105A113	1uF 10V	1	
	C4851	F1H1H101B052	100pF 50V	1	GS
	C4852	F1H1H101B052	100pF 50V	1	GS
	C4853	F1H1H101B052	100pF 50V	1	GS
	C4854	F1H1H101B052	100pF 50V	1	
	C4855	F1H1H101B052	100pF 50V	1	
	C4856	F1H1H101B052	100pF 50V	1	
	C4857	F1K1E1060001	0.1uF 25V	1	
	C4858	F1H1H102B047	1000pF 50V	1	GS
	C4859	F1H1H104B047	0.1uF 50V	1	GS
	C4860	F1H1H101B052	100pF 50V	1	
	C4861	F1H1H101B052	100pF 50V	1	
	C4862	F1H1H101B052	100pF 50V	1	

Safety	Ref. No.	Part No.	Part Name & Description	Qty	Remarks
	C4863	F1H1H101B052	100pF 50V	1	
	C4864	F1H1H101B052	100pF 50V	1	
	C6000	F1H1H104B047	0.1uF 50V	1	
	C6002	F1K1E1060009	10uF 25V	1	
	C6003	F1H1H102B047	1000pF 50V	1	
	C6004	F1H1H102B047	1000pF 50V	1	
	C6005	F1H1H102B047	1000pF 50V	1	
	C6006	F1H1H102B047	1000pF 50V	1	
	C6007	F1H1H102B047	1000pF 50V	1	
	C6008	F1H1H331B052	330pF 50V	1	
	C6009	F1H1H102B047	1000pF 50V	1	
	C6010	F1H1H331B052	330pF 50V	1	
	C6011	F1H1H102A219	1000pF 50V	1	
	C6012	F1H1H331B052	330pF 50V	1	
	C6013	F1H1H102B047	1000pF 50V	1	
	C6014	F1H1H102B047	1000pF 50V	1	
	C6015	F1H1H102B047	1000pF 50V	1	
	C6016	F1H1H102B047	1000pF 50V	1	
	C6017	F1H1H103A219	0.01uF 50V	1	
	C6018	F1H1H102B047	1000pF 50V	1	
	C6021	F2A1E221B422	220uF 25V	1	
	C6022	F1H1H472A219	4700pF 50V	1	
	C6023	F2A1H470B412	47uF 50V	1	
	C6024	F2A1C101A115	100uF 16V	1	
	C6025	F1K1E1060009	10uF 25V	1	
	C6026	F2A1H220B411	22uF 50V	1	
	C6101	F1H1H101B052	100pF 50V	1	
	C6102	F1H1H101B052	100pF 50V	1	
	C6108	F1H1A105A113	1uF 10V	1	
	C6109	F1H1A105A113	1uF 10V	1	
	C6111	F1H1C104A041	0.1uF 16V	1	
	C6112	F1H0J1060006	10uF 6.3V	1	
	C6113	F1H0J1060006	10uF 6.3V	1	
	C6114	F1H1C104A041	0.1uF 16V	1	
	C6116	D0GB822JA065	8.2K 1/10W	1	
	C6117	F1H1C104A041	0.1uF 16V	1	
	C6118	D0GB822JA065	8.2K 1/10W	1	
	C6119	F1H0J1060006	10uF 6.3V	1	
	C6127	F1H1C104A178	0.1uF 16V	1	
	C6128	F1H1H561B052	560pF 50V	1	
	C6129	F1H1A105A113	1uF 10V	1	
	C6129	F1H1H561B052	560pF 50V	1	
	C6130	F1H1A105A113	1uF 10V	2	
	C6131	F1H1A105A113	1uF 10V	1	
	C6131	F1H1H101B052	100pF 50V	1	
	C6132	F1H1A105A113	1uF 10V	1	
	C6132	F1H1H101B052	100pF 50V	1	
	C6133	F1H1A105A113	1uF 10V	1	
	C6134	F1H1H681B052	680pF 50V	1	
	C6135	F1H1H681B052	680pF 50V	1	
	C6136	F1L1C476A098	47uF 16V	1	
	C6201	F1H1H101B052	100pF 50V	1	
	C6202	F1H1H101B052	100pF 50V	1	
	C6318	F1H1H331B052	330pF 50V	1	
	C6319	F1H1H331B052	330pF 50V	1	
	C6320	F1H1H103B047	0.01uF 50V	1	
	C6321	F1H1H103B047	0.01uF 50V	1	
	C6322	F1H1H103B047	0.01uF 50V	1	
	C6400	F1H1H104B047	0.1uF 50V	1	
	C6401	F1H1H104B047	0.1uF 50V	1	
	C6402	F1H1H221B047	220pF 50V	1	
	C6403	F1H1H221B047	220pF 50V	1	
	C6405	F1H1A105A113	1uF 10V	1	
	C6406	F1H1A105A113	1uF 10V	1	
	C6407	F1H1A105A113	1uF 10V	1	
	C6408	F1H1A105A113	1uF 10V	1	
	C6409	F1H1H103B047	0.01uF 50V	1	
	C6500	F1H1H101B052	100pF 50V	1	
	C6501	F1H1H102A219	1000pF 50V	1	
	C6503	F1H1H104B047	0.1uF 50V	1	
	C9001	F1H1C104A178	0.1uF 16V	1	
	C9002	F1H1C104A178	0.1uF 16V	1	
	C9003	F1H1C104A178	0.1uF 16V	1	

Safety	Ref. No.	Part No.	Part Name & Description	Qty	Remarks
	C9004	F1H1C104A178	0.1uF 16V	1	
	C9005	F1H1C104A178	0.1uF 16V	1	
	C9007	F1H1H104B047	0.1uF 50V	1	
	C9008	F1H1H104B047	0.1uF 50V	1	

IPSG1408