ORDER NO. MD0807009CE

# Service Manual

## AV Control Receiver

HDMI™ HIGH-DEFINITION MULTIMEDIA INTERFACE

VIERA ink

## SA-BX500EB
## SA-BX500EE
## SA-BX500EG

Colour

(K).....Black Type

## Specifications

**Main unit SA-BX500EB/EE/EG**

**●GENERAL**

| | |
|---|---|
| **Power supply:** | AC 220V to 240V, 50 Hz |
| **Power consumption:** | This unit 150 W |
| **Power consumption in standby mode:** | approx. 0.8 W |
| **Power consumption in HDMI off mode:** | approx. 0.4 W |
| **Dimensions (W×H×D):** | 430 mm×158.5 mm×339 mm |
| **Mass:** | This unit 5 kg |
| **Operating temperature range:** | +0 °C to +40 °C |
| **Operating humidity range:** | 20% to 80% RH (no condensation) |

**●AMPLIFIER SECTION**

**Power output (at AC220 to 240 V)**

**1 kHz (T.D.H. 1%) each channel driven**

Front (L/R): 150 W per channel (6 Ω)

Center: 150 W per channel (6 Ω)

Surround (L/R): 150 W per channel (6 Ω)

Surround Back (L/R): 150 W per channel (6 Ω)

Total Harmonic distortion at 1 kHz power: 0.3% W

**Load impedance**

Front (L/R)

A or B: 4 to 16 Ω

A and B: 6 to 16 Ω

BI-WIRE: 4 to 16 Ω

Center: 6 to 16 Ω

Surround (L/R): 6 to 16 Ω

Surround Back (L/R): 6 to 16 Ω

**Frequency Response**

CD, AUX, TV, GAME, CABLE/SAT, VCR, DVD RECORDER, BD/DVD PLAYER/ ANALOG 8CH IN, OPTION

4 Hz to 40 kHz, ±2 dB

Panasonic®

© 2008 Matsushita Electric Industrial Co. Ltd.. All rights reserved. Unauthorized copying and distribution is a violation of law.

**Subwoofer frequency response (-6 dB)**

7 Hz to 200 Hz

**Input sensitivity and impedance**

CD, AUX, TV, GAME, CABLE/SAT, VCR, DVD RECORDER, BD/DVD PLAYER/ ANALOG 8CH IN, OPTION

200 mV/22 kΩ

**S/N at rated power (6 Ω)**

CD, TV, BD/DVD PLAYER, DVD RECORDER (Digital Input)

97 dB

**Tone controls**

| | |
|---|---|
| BASS: | 50 Hz, +10 to -10 dB |
| TREBLE: | 20 kHz, +10 to -10 dB |

**Output Voltage**

| | |
|---|---|
| DVD RECORDER: | 200 mV |

**Channel balance (250 Hz to 6.3 kHz)**

±1 dB

**Channel separation**

55dB

Digital input (OPTICAL):

3

Digital input (COAXIAL):

1

HDMI Input (Corresponding Deep Colour)

3

HDMI Output (Corresponding Deep Colour)

1

**●FM TUNER, TERMINALS SECTION**

**Frequency Modulation (FM)**

Frequency range:

87.50-108.00 MHz (50-kHz step)

Sensitivity

| | |
|---|---|
| S/N 30 dB | 1.5 µV / 75 Ω |
| S/N 26 dB | 1.3 µV / 75 Ω |
| S/N 20 dB | 1.2 µV / 75 Ω |

Total harmonic distortion

| | |
|---|---|
| MONO | 0.2% |
| STEREO | 0.3% |

S/N

| | |
|---|---|
| MONO | 60 dB |
| STEREO | 58 dB |

**Frequency response**

20 Hz to 15 kHz, +1 dB, -2 dB

Antenna terminal

75 Ω (unbalanced)

**●AM TUNER SECTION**

Frequency range:

522 to 1629 kHz (9 kHz steps)

520 to 1630 kHz (10 kHz steps)

**●D-Port SECTION**

An exclusive terminal for SH-PD10 (option)

1

**●VIDEO SECTION**

**Output voltage at 1 V input (unbalanced)**

1 ± 0.1 Vp-p

**Maximum input voltage**

1.5 Vp-p

**Input/output impedance**

75 Ω (unbalanced)

**Composite Video (Input)**

BD/DVD PLAYER, DVD RECORDER, VCR, CABLE/SAT, GAME, AUX

**Composite Video (Output)**

DVD RECORDER, TV MONITOR

**S-Video (Input)**

BD/DVD PLAYER, DVD RECORDER, VCR, CABLE/SAT, GAME, AUX

**S-Video (Output)**

DVD RECORDER, TV MONITOR

**Component Video (Input)**

BD/DVD PLAYER, DVD RECORDER, CABLE/SAT

**Component Video (Output)**

TV MONITOR

**Note:**

1. Specifications are subject to change without notice.
   Mass and dimensions are approximate.
2. Total harmonic distortion is measured by the digital spectrum analyzer.

**Solder:**

This model uses lead free solder (PbF).

Manufactured under license from Dolby Laboratories. Dolby, Pro Logic, and the double-D symbol are trademarks of Dolby Laboratories.

Manufactured under license under U.S. Patent #'s: 5,451,942; 5,956,674; 5,974,380; 5,978,762; 6,226,616; 6,487,535 & other U.S. and worldwide patents issued & pending. DTS is a registered trademark and the DTS logos, Symbol, DTS-HD and DTS-HD Master Audio are trademarks of DTS, Inc. © 1996-2007 DTS, Inc. All Rights Reserved.

HDMI, the HDMI logo and High-Definition Multimedia Interface are trademarks or registered trademarks of HDMI Licensing LLC.

HDAVI Control™ is a trademark of Matsushita Electric Industrial Co., Ltd.

■ **Built-in decoders**
You can play discs with these symbols.

## ⚠ WARNING

This service information is designed for experienced repair technicians only and is not designed for use by the general public.
It does not contain warnings or cautions to advise non-technical individuals or potential dangers in attempting to service a product.
Products powered by electricity should be serviced or repaired only by experienced professional technicians. Any attempt to service or repair the product or products dealt with in this service information by anyone else could result in serious injury or death.

# CONTENTS


Page

**1 Safety Precautions ..... 5**
1.1. GENERAL GUIDELINES ..... 5
1.2. Before Repair and Adjustment ..... 5
1.3. Protection Circuitry ..... 5
1.4. Safety Parts Information ..... 6
1.5. Caution for AC Cord ..... 7
**2 Prevention of Electrostatic Discharge (ESD) to Electrostatically Sensitive (ES) Devices ..... 8**
**3 About Lead Free Solder (PbF) ..... 9**
3.1. Service caution based on legal restrictions ..... 9
**4 Accessories ..... 10**
**5 Operation Procedures ..... 11**
5.1. Remote Control Key Buttons Operations ..... 11
5.2. Main Unit Key Buttons Operations ..... 12
5.3. Using the VIERA Link “HDAVI Control™” ..... 13
5.4. Main Unit Connections ..... 14
**6 Self-Diagnosis and Display Function ..... 22**
6.1. Automatically Displayed Error Codes ..... 22
6.2. Display Details ..... 22
6.3. Overload/Shutdown Detection internal Condition ..... 23
6.4. Overload/Thermal Detection Display ..... 23
6.5. Activating Self Diagnosis Function (Service Mode) ..... 23
6.6. Returning to Normal Display ..... 24
6.7. Activating Self Diagnosis Function (Doctor Mode) ..... 24
6.8. Wireless Link ..... 25
**7 Assembling and Disassembling ..... 27**
7.1. Disassembly Flow Chart ..... 28
7.2. Main Components and P.C.B. Locations ..... 29
7.3. Disassembly of Top Cabinet ..... 30
7.4. Disassembly and checking of DSP (Side A/B) P.C.B. ..... 30
7.5. Disassembly and checking of Speaker P.C.B. ..... 31
7.6. Disassembly and checking of D-Amp B (3CH) & Fan P.C.B. ..... 31
7.7. Replacement of Digital Amp IC (IC5000) of D-Amp B (3CH) P.C.B. ..... 33
7.8. Disassembly and checking of SMPS & AC Inlet P.C.B. ..... 34
7.9. Replacement of Switch Regulator IC (IC5701) ..... 35
7.10. Replacement of Switch Regulator Diode (D5702) ..... 36
7.11. Replacement of Regulator Diode (D5801) ..... 38
7.12. Replacement of Regulator Diode (D5802) ..... 38
7.13. Replacement of Regulator Diode (D5803) ..... 39
7.14. Disassembly and checking of D-Amp A (4CH) P.C.B. ..... 40
7.15. Replacement of Digital Amp IC (IC5000) of D-Amp A (4CH) P.C.B. ..... 41
7.16. Disassembly and checking of HDMI side (A) and side (B) ..... 42
7.17. Disassembly and Checking of S-Video & Video P.C.B. ..... 43
7.18. Disassembly and checking of Wireless Adapter, Digital & D-Port P.C.B. ..... 43
7.19. Disassembly and Checking of Main (Side A/B) P.C.B. ..... 45
7.20. Disassembly of Front Panel ..... 46
7.21. Disassembly and checking of Panel, Headphone, Volume P.C.B. ..... 47
**8 Voltage and Waveform Chart ..... 49**
8.1. HDMI P.C.B. ..... 49
8.2. DSP P.C.B. ..... 51
8.3. D-Amp A (4CH) P.C.B. ..... 54
8.4. D-Amp B (3CH) P.C.B. ..... 55
8.5. Main P.C.B. ..... 56
8.6. Panel P.C.B. ..... 59
8.7. Digital, Speaker & Fan P.C.B. ..... 59
8.8. Video P.C.B. ..... 60
8.9. S-Video P.C.B. ..... 60
8.10. SMPS P.C.B. ..... 60
8.11. Waveform Chart ..... 61
**9 Illustration of IC’s, Transistors and Diodes ..... 63**
**10 Wiring Connection Diagram ..... 65**
**11 Block Diagram ..... 67**
11.1. System Control ..... 67
11.2. HDMI ..... 68
11.3. IC Terminal (HDMI) Chart ..... 69
11.4. DSP ..... 70
11.5. IC Terminal (DSP) Chart ..... 72
11.6. Audio ..... 74
11.7. Digital Audio Amp (4CH) ..... 76
11.8. Digital Audio Amp (3CH) ..... 77
11.9. Speaker Channel ..... 78
11.10. Video (component & composite video) ..... 79
11.11. Video (S-video) ..... 80
11.12. Power ..... 81
**12 Schematic Diagram Notes ..... 83**
**13 Schematic Diagram ..... 85**
13.1. HDMI Circuit ..... 85
13.2. DSP Circuit ..... 89
13.3. Main Circuit ..... 95
13.4. Panel Circuit ..... 103
13.5. S-Video Circuit ..... 105
13.6. Speaker Circuit ..... 106
13.7. Video Circuit ..... 107

13.8. D-Port, Headphone, Digital, Volume, Wireless Adapter, Fan Circuit ---- 108
13.9. D-Amp A (4CH) Circuit ---- 109
13.10. D-Amp B (3CH) Circuit ---- 111
13.11. SMPS Circuit ---- 113
13.12. AC Inlet Circuit ---- 115
**14 Printed Circuit Board ---- 117**
14.1. HDMI P.C.B. ---- 117
14.2. DSP P.C.B. ---- 118
14.3. Main P.C.B. ---- 119
14.4. D-Port, Panel, S-Video P.C.B. ---- 120
14.5. Headphone, Speaker, Digital, Video, Volume P.C.B. ---- 121
14.6. Wireless, Fan, AC Inlet P.C.B. ---- 122
14.7. D-Amp A (4CH) P.C.B. ---- 123
14.8. D-Amp B (3CH) P.C.B. ---- 124
14.9. SMPS P.C.B. ---- 125
**15 Basic Troubleshooting Guide ---- 127**
15.1. Troubleshooting Guide for F61 and/or F76 ---- 127
**16 Overall Simplified Block for BX500 ---- 135**
**17 Terminal Function of IC's ---- 137**
17.1. IC8001 (RFXWBX500EBK): Micro-processor ---- 137
17.2. IC501 (C0HBB0000057): IC FL Driver ---- 137
**18 Exploded Views ---- 139**
18.1. Cabinet Parts Location ---- 139
18.2. Packaging ---- 142
**19 Replacement Parts List ---- 145**
19.1. Component Parts List ---- 146
**20 Schematic Diagram for printing with letter size ---- 169**

# 1 Safety Precautions

## 1.1. GENERAL GUIDELINES

1. When servicing, observe the original lead dress. If a short circuit is found, replace all parts which have been overheated or damaged by the short circuit.
2. After servicing, see to it that all the protective devices such as insulation barriers, insulation papers shields are properly installed.
3. After servicing, carry out the following leakage current checks to prevent the customer from being exposed to shock hazards.

### 1.1.1. LEAKAGE CURRENT COLD CHECK

1. Unplug the AC cord and connect a jumper between the two prongs on the plug.
2. Measure the resistance value, with an ohmmeter, between the jumpered AC plug and each exposed metallic cabinet part on the equipment such as screwheads, connectors, control shafts, etc. When the exposed metallic part has a return path to the chassis, the reading should be between 1MΩ and 5.2MΩ.
   When the exposed metal does not have a return path to the chassis, the reading must be ∞

### 1.1.2. LEAKAGE CURRENT HOT CHECK

1. Plug the AC cord directly into the AC outlet. Do not use an isolation transformer for this check.
2. Connect a 1.5kΩ, 10 watts resistor, in parallel with a 0.15µF capacitors, between each exposed metallic part on the set and a good earth ground such as a water pipe, as shown in **Figure 1**.
3. Use an AC voltmeter, with 1000 ohms/volt or more sensitivity, to measure the potential across the resistor.
4. Check each exposed metallic part, and measure the voltage at each point.
5. Reverse the AC plug in the AC outlet and repeat each of the above measurements.
6. The potential at any point should not exceed 0.75 volts RMS. A leakage current tester (Simpson Model 229 or equivalent) may be used to make the hot checks, leakage current must not exceed 1/2 milliamp. In case a measurement is outside of the limits specified, there is a possibility of a shock hazard, and the equipment should be repaired and rechecked before it is returned to the customer.

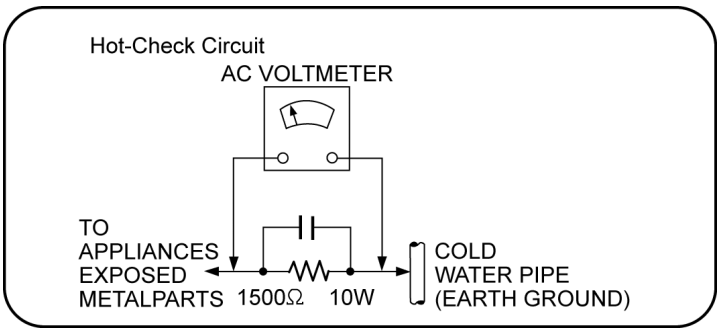


Figure 1

## 1.2. Before Repair and Adjustment

Disconnect AC power to discharge unit AC Capacitors as such (C5700, C5701, C5702, C5703, C5704) through a 10 Ω, 10 W resistor to ground.

**Caution:**

DO NOT SHORT-CIRCUIT DIRECTLY (with a screwdriver blade, for instance), as this may destroy solid state devices.

After repairs are completed, restore power gradually using a variac, to avoid overcurrent.

Current consumption at AC 230 V~240 V, 50 Hz in NO SIGNAL mode volume minimal should be ~ 600 mA.

## 1.3. Protection Circuitry

The protection circuitry may have operated if either of the following conditions are noticed:

- No sound is heard when the power is turned on.
- Sound stops during a performance.

The function of this circuitry is to prevent circuitry damage if, for example, the positive and negative speaker connection wires are

“shorted”, or if speaker systems with an impedance less than the indicated rated impedance of the amplifier are used.

If this occurs, follow the procedure outlines below:

1. Turn off the power.
2. Determine the cause of the problem and correct it.
3. Turn on the power once again after one minute.

**Note:**

When the protection circuitry functions, the unit will not operate unless the power is first turned off and then on again.

## 1.4. Safety Parts Information

**Safety Parts List:**

There are special components used in this equipment which are important for safety.
These parts are marked by ⚠ in the Schematic Diagrams & Replacement Parts List. It is essential that these critical parts should be replaced with manufacturer’s specified parts to prevent shock, fire or other hazards. Do not modify the original design without permission of manufacturer.

**Table 1**

| Ref. No. | Part No. | Part Name & Description | Remarks |
|---|---|---|---|
| 14 | REXX0640-J | BLACK WIRE (SMPS-AC) | [M] ⚠ |
| 15 | REXX0641-J | RED WIRE (SMPS-AC) | [M] ⚠ |
| 19 | RGR0385A-A | REAR PANEL | [M]EB/EG ⚠ |
| 19 | RGR0385A-B | REAR PANEL | [M] EE ⚠ |
| 30 | RKM0603-K | TOP CABINET | [M] ⚠ |
| A2 | K2CQ2CA00007 | AC CORD | [M] EG/EE ⚠ |
| A2 | K2CT3CA00004 | AC CORD | [M] EB ⚠ |
| PCB18 | REPX0622R | SMPS P.C.B | [M] (RTL) ⚠ |
| PCB19 | REPX0622R | AC INLET P.C.B. | [M] (RTL) ⚠ |
| DZ5701 | ERZV10V511CS | ZNR | [M] ⚠ |
| L5701 | ELF15N035AN | LINE FILTER | [M] ⚠ |
| L5702 | ELF22V020E | LINE FILTER | [M] ⚠ |
| L5703 | ELF21N024E | LINE FILTER | [M] ⚠ |
| T5701 | ETS42BM1B6AC | TRANSFORMER | [M] ⚠ |
| T5751 | ETS19AB281AG | BACKUP TRANSFORMER | [M] ⚠ |
| T7001 | G4D1A0000094 | SWITCHING TRANSFORMER | [M] ⚠ |
| PC5701 | B3PBA0000402 | PHOTO COUPLER | [M] ⚠ |
| PC5702 | B3PBA0000402 | PHOTO COUPLER | [M] ⚠ |
| PC5720 | B3PBA0000402 | PHOTO COUPLER | [M] ⚠ |
| PC5799 | B3PBA0000402 | PHOTO COUPLER | [M] ⚠ |
| F1 | K5D402BK0007 | FUSE | [M] ⚠ |
| IP7001 | K5H7512A0010 | IC PROTECTOR | [M] ⚠ |
| TH5701 | D4CAA5R10001 | THERMISTOR | [M] ⚠ |
| TH5860 | D4CC11040013 | THERMISTOR | [M] ⚠ |
| P5701 | K2AA2B000017 | AC INLET | [M] ⚠ |
| C5700 | F1BAF1020020 | 1000pF | [M] ⚠ |
| C5701 | ECQU2A104MLC | 0.1uF | [M] ⚠ |
| C5702 | ECQU2A104MLC | 0.1uF | [M] ⚠ |
| C5703 | ECQU2A104MLC | 0.1uF | [M] ⚠ |
| C5704 | F1BAF1020020 | 1000pF | [M] ⚠ |

## 1.5. Caution for AC Cord

**(For the United Kingdom and Republic of Ireland)**
**( EB area code model only)**

For your safety, please read the following text carefully.

This appliance is supplied with a moulded three pin mains plug for your safety and convenience.
A 5-ampere fuse is fitted in this plug.
Should the fuse need to be replaced please ensure that the replacement fuse has a rating of 5-ampere and that it is approved by ASTA or BSI to BS1362.
Check for the ASTA mark or the BSI mark on the body of the fuse.

If the plug contains a removable fuse cover you must ensure that it is refitted when the fuse is replaced.
If you lose the fuse cover the plug must not be used until a replacement cover is obtained.
A replacement fuse cover can be purchased from your local dealer.

**CAUTION!**
IF THE FITTED MOULDED PLUG IS UNSUITABLE FOR THE SOCKET OUTLET IN YOUR HOME THEN THE FUSE SHOULD BE REMOVED AND THE PLUG CUT OFF AND DISPOSED OF SAFELY.
THERE IS A DANGER OF SEVERE ELECTRICAL SHOCK IF THE CUT OFF PLUG IS INSERTED INTO ANY 13-AMPERE SOCKET.

If a new plug is to be fitted please observe the wiring code as stated below.
If in any doubt please consult a qualified electrician.

**IMPORTANT**
The wires in this mains lead are coloured in accordance with the following code:
Blue: Neutral, Brown: Live.
As these colours may not correspond with the coloured markings identifying the terminals in your plug, proceed as follows:
The wire which is coloured Blue must be connected to the terminal which is marked with the letter N or coloured Black or Blue.
The wire which is coloured Brown must be connected to the terminal which is marked with the letter L or coloured Brown or Red.

**WARNING: DO NOT CONNECT EITHER WIRE TO THE EARTH TERMINAL WHICH IS MARKED WITH THE LETTER E, BY THE EARTH SYMBOL ⏚ OR COLOURED GREEN OR GREEN/ YELLOW.**

**THIS PLUG IS NOT WATERPROOF KEEP DR Y.**

**Before use**
Remove the connector cover.

**How to replace the fuse**
The location of the fuse differ according to the type of AC mains plug (figures A and B). Confirm the AC mains plug fitted and follow the instructions below. Illustrations may differ from actual AC mains plug.

1. Open the fuse cover with a screwdriver.

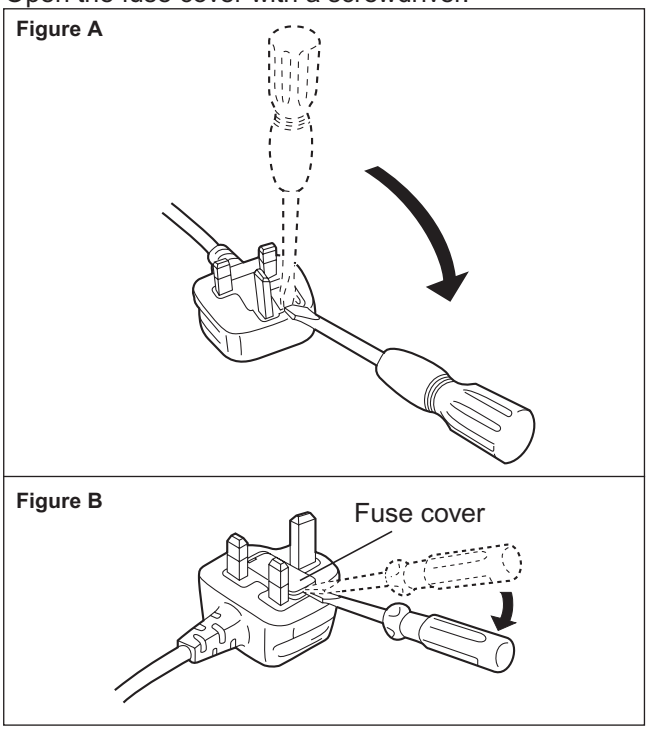


2. Replace the fuse and close or attach the fuse cover.

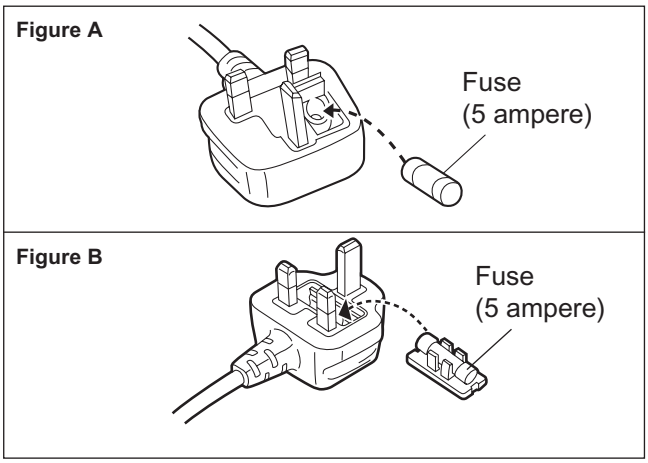

# 2 Prevention of Electrostatic Discharge (ESD) to Electrostatically Sensitive (ES) Devices

Some semiconductor (solid state) devices can be damaged easily by static electricity. Such components commonly are called Electrostatically Sensitive (ES) Devices. Examples of typical ES devices are integrated circuits and some field-effect transistors and semiconductor “chip” components. The following techniques should be used to help reduce the incidence of component damage caused by electrostatic discharge (ESD).

1. Immediately before handling any semiconductor component or semiconductor-equipped assembly, drain off any ESD on your body by touching a known earth ground. Alternatively, obtain and wear a commercially available discharging ESD wrist strap, which should be removed for potential shock reasons prior to applying power to the unit under test.
2. After removing an electrical assembly equipped with ES devices, place the assembly on a conductive surface such as aluminum foil, to prevent electrostatic charge buildup or exposure of the assembly.
3. Use only a grounded-tip soldering iron to solder or unsolder ES devices.
4. Use only an anti-static solder removal device. Some solder removal devices not classified as “anti-static (ESD protected)” can generate electrical charge sufficient to damage ES devices.
5. Do not use freon-propelled chemicals. These can generate electrical charges sufficient to damage ES devices.
6. Do not remove a replacement ES device from its protective package until immediately before you are ready to install it. (Most replacement ES devices are packaged with leads electrically shorted together by conductive foam, aluminum foil or comparable conductive material).
7. Immediately before removing the protective material from the leads of a replacement ES device, touch the protective material to the chassis or circuit assembly into which the device will be installed.

   **Caution:**

   Be sure no power is applied to the chassis or circuit, and observe all other safety precautions.
8. Minimize bodily motions when handling unpackaged replacement ES devices. (Otherwise harmless motion such as the brushing together of your clothes fabric or the lifting of your foot from a carpeted floor can generate static electricity (ESD) sufficient to damage an ES device).

# 3 About Lead Free Solder (PbF)

## 3.1. Service caution based on legal restrictions

### 3.1.1. General description about Lead Free Solder (PbF)

The lead free solder has been used in the mounting process of all electrical components on the printed circuit boards used for this equipment in considering the globally environmental conservation.

The normal solder is the alloy of tin (Sn) and lead (Pb). On the other hand, the lead free solder is the alloy mainly consists of tin (Sn), silver (Ag) and Copper (Cu), and the melting point of the lead free solder is higher approx.30 degrees C (86°F) more than that of the normal solder.

**Definition of PCB Lead Free Solder being used**

| | |
|---|---|
| The letter of “PbF” is printed either foil side or components side on the PCB using the lead free solder. (See right figure) | PbF |

**Service caution for repair work using Lead Free Solder (PbF)**

- The lead free solder has to be used when repairing the equipment for which the lead free solder is used.
  (Definition: The letter of “PbF” is printed on the PCB using the lead free solder.)
- To put lead free solder, it should be well molten and mixed with the original lead free solder.
- Remove the remaining lead free solder on the PCB cleanly for soldering of the new IC.
- Since the melting point of the lead free solder is higher than that of the normal lead solder, it takes the longer time to melt the lead free solder.
- Use the soldering iron (more than 70W) equipped with the temperature control after setting the temperature at 350±30 degrees C (662±86°F).

**Recommended Lead Free Solder (Service Parts Route.)**

- The following 3 types of lead free solder are available through the service parts route.
  RFKZ03D01K----------(0.3mm 100g Reel)
  RFKZ06D01K----------(0.6mm 100g Reel)
  RFKZ10D01K----------(1.0mm 100g Reel)

**Note**

* Ingredient: tin (Sn), 96.5%, silver (Ag) 3.0%, Copper (Cu) 0.5%, Cobalt (Co) / Germanium (Ge) 0.1 to 0.3%

# 4 Accessories

- **Note: Refer to “Replacement Parts List” (Section 25) for the part number.**

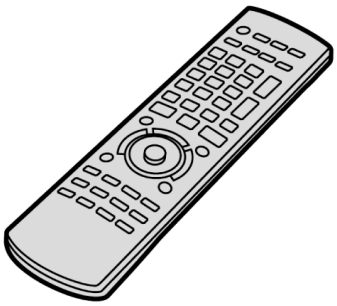

Remote control

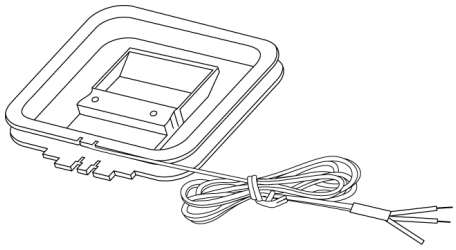

AM loop antenna

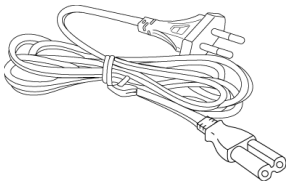

AC cord
(EE/EG only)

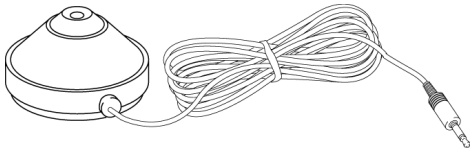

Setup microphone

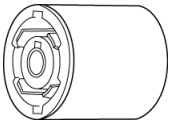

Antenna plug
adapter
(EB only)

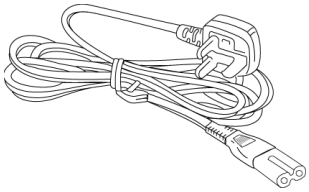

AC cord
(EB only)

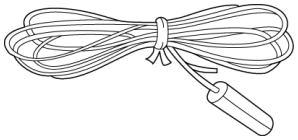

FM indoor antenna

# 5 Operation Procedures

## 5.1. Remote Control Key Buttons Operations

### Remote control

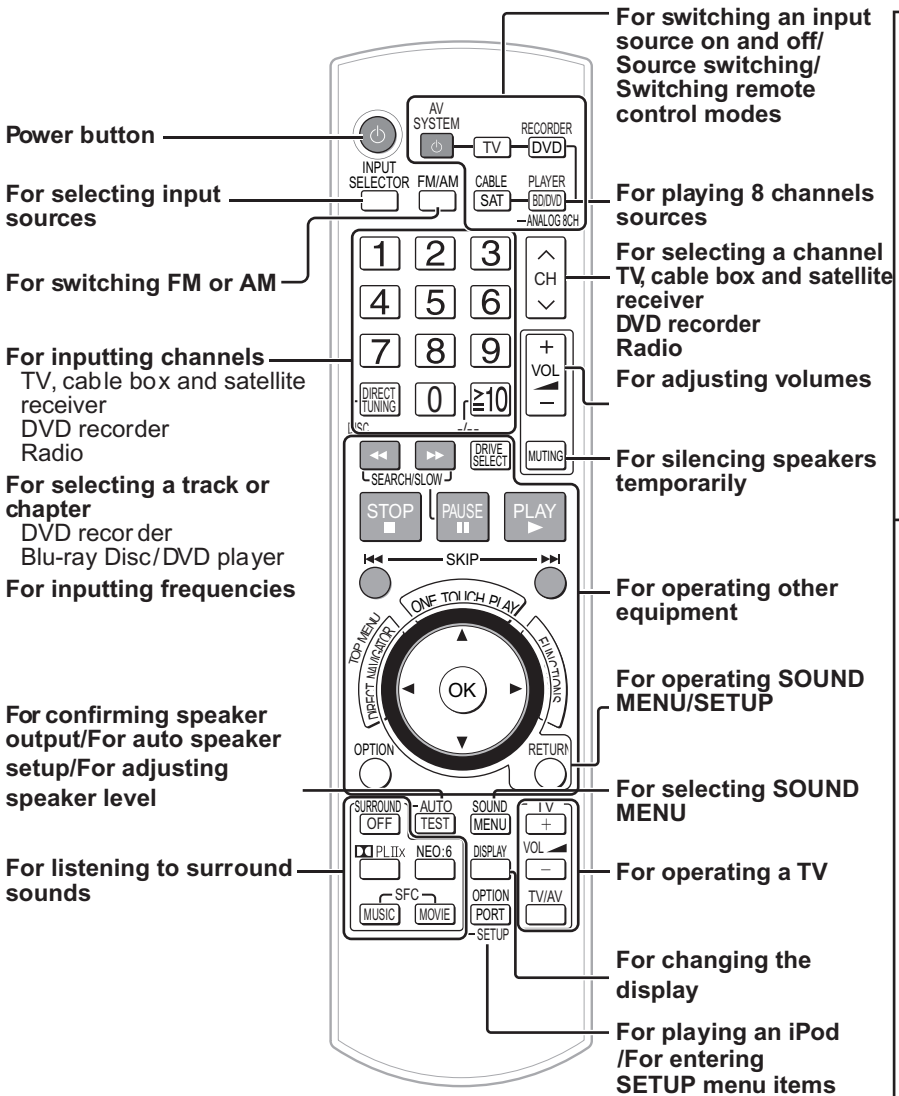


**Batteries**

**Press on the tab to open.**

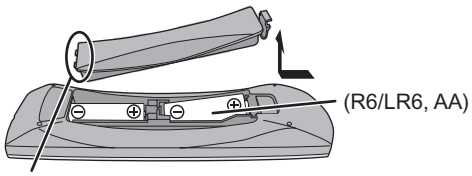


Place this side in before the other side when you close.

- Insert so the poles (⊕ and ⊖) match those in the remote control.
- Do not use rechargeable type batteries.
- Do not heat or expose to.
- Do not leave the batteries in an automobile exposed to direct sunlight for a long period of time with doors and windows closed.

**Use**

Remote control signal sensor

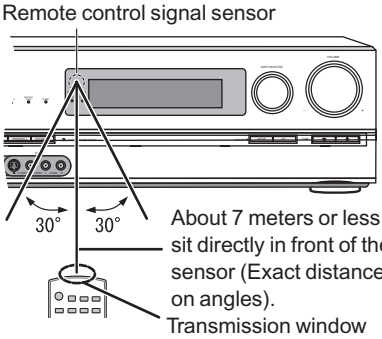


**Caution**

- Do not place an object between the signal sensor and the remote control.
- Do not place the signal sensor under direct sunlight or the strong light of an inverter fluorescent lamp.
- Keep the transmission window and the unit s sensor free from dust.

**When you set the unit in a cabinet**

The remote controlling range may decrease depending on the thickness or colours of glass cabinet doors.

## 5.2. Main Unit Key Buttons Operations

### This unit

**Lights on when playing a disc using multi-channel LPCM format**

**Lights on when playing a disc using high definition format such as Blu-ray Disc**

**Lights on when the following multi-channel playback settings are used**
- When playing multi-channel sources
- When using surround effects for two-channel sources, etc.

**Standby indicator [⏻]**
When the unit is connected to the AC mains supply, this indicator lights up in standby mode and goes out when the unit is turned on.

**Standby/on switch [⏻/|]**
Press to switch the unit from on to standby mode or vice versa.In standby mode, the unit is still consuming a small amount of power.

**For connecting headphones**

**For connecting the setup microphone**

**For connecting a video camera etc.**

**Lights on when BI-AMP is on**

**For switching the surround playback on and off (The indicator lights up when the surround playback is on.)**

**Lights up under the condition that using the digital transmitter (SH-FX67) is possible**

**For selecting input sources**

**For adjusting volumes**

**For tuning the radio**

**For SETUP operations**

**Lights on during the auto speaker setup**

**For selecting front speakers**

### Display

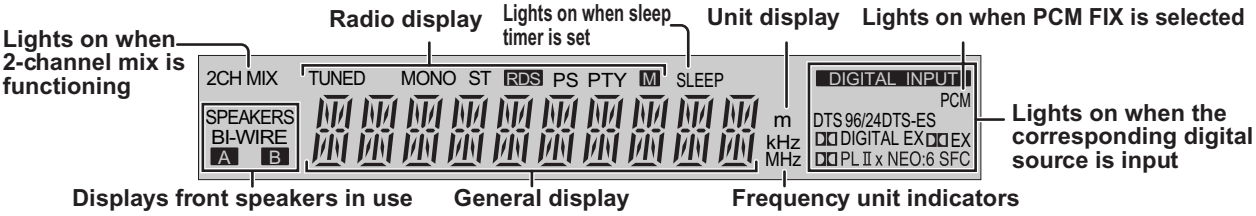

## 5.3. Using the VIERA Link "HDAVI Control™"

# Using the VIERA Link HDAVI Control™

**What is VIERA Link HD AVI Control ?**
**VIERA Link HD AVI Control is a convenient function that offers linked operations of this unit, and a Panasonic TV (VIERA) or DVD recorder (DIGA) under HD AVI Control . You can use this function by connecting the equipment with the HDMI cable. See the operating instructions for connected equipment for operational details.**

- VIERA Link HDAVI Control , based on the control functions provided by HDMI which is an industry standard known as HDMI CEC (Consumer Electronics Control), is a unique function that we have developed and added. As such, its operation with other manufacturers equipment that supports HDMI CEC cannot be guaranteed.
- **This unit supports HD AVI Control 1 function.**
  This standard is compatible with Panasonic s conventional HDAVI equipment.
- Please refer to individual manuals for other manufacturers equipment supporting VIERA Link function.

### You can enjoy the followings by using the remote control of TV (VIERA)

1 **You can select Speaker Selection ( Home Cinema or TV ).**
**Home Cinema:** This unit will be automatically turned on if it is in standby mode and the sound is from the speakers connected to this unit. You can also adjust the volume level by using the volume control buttons.
**TV:** TV speakers are active.

2 **When you switch off the TV (VIERA), this unit automatically turns off .**
(This operation is unavailable when you set the input source as ***FM*** , A***M*** , ***CD*** or ***OPTION P.*** on this unit.)
When VIERA Link HDAVI Control compatible recorder (DIGA) is connected with HDMI cable, the recorder (DIGA) also turns off.

**Note**

- When you operate the TV (VIERA) such as selecting a channel this unit s input selector will automatically switch to ***TV*** .
- When you operate DIGA DVD recorder, this unit s input selector will automatically switch to ***DVD R.*** .
- To operate other functions, use this unit s remote control.

### Connection

**Connect your home theater equipment (VIERA Link HD AVI Control compatible VIERA television and DIGA DVD recorder) with an HDMI cable.**

- It is recommended that you use Panasonic s HDMI cable.
  Recommended part number: RP-CDHG10 (1.0 m), RP-CDHG15 (1.5 m), RP-CDHG20 (2.0 m), RP-CDHG30 (3.0 m), RP-CDHG50 (5.0 m), etc.
- This unit incorporates HDMI (V .1.3 with Deep Colour) technology.
- Non-HDMI-compliant cables cannot be utilized.
- Please use High Speed HDMI Cables that have the HDMI logo (as shown on the cover).
- When outputting 1080p signal, please use the HDMI cables 5.0 meters or less.
- Only with HDMI cable connection, you cannot enjoy TV sounds on this unit. Connect TV to this unit with the optical cable to enjoy TV sound.

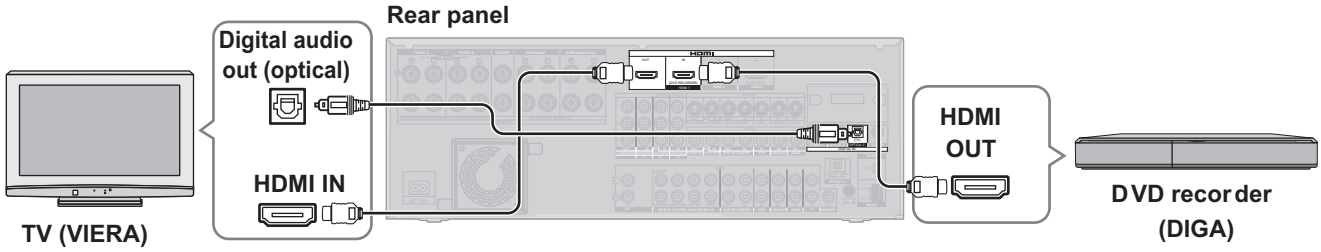

# 5.4. Main Unit Connections

## 5.4.1. Video & Audio Terminals

### Basic connections

**Connecting cables to video and audio terminals (Connecting equipment without HDMI terminal)**

| Video cable | Audio cable | |
|---|---|---|
| **Video connection cable** (not included) | **Optical fibre cable** (not included) | **Stereo phono cable** (not included) White (L) Red (R) |

**To enjoy TV with surround sound, make connection Ⓐ or Ⓑ instructed below according to your equipment.**

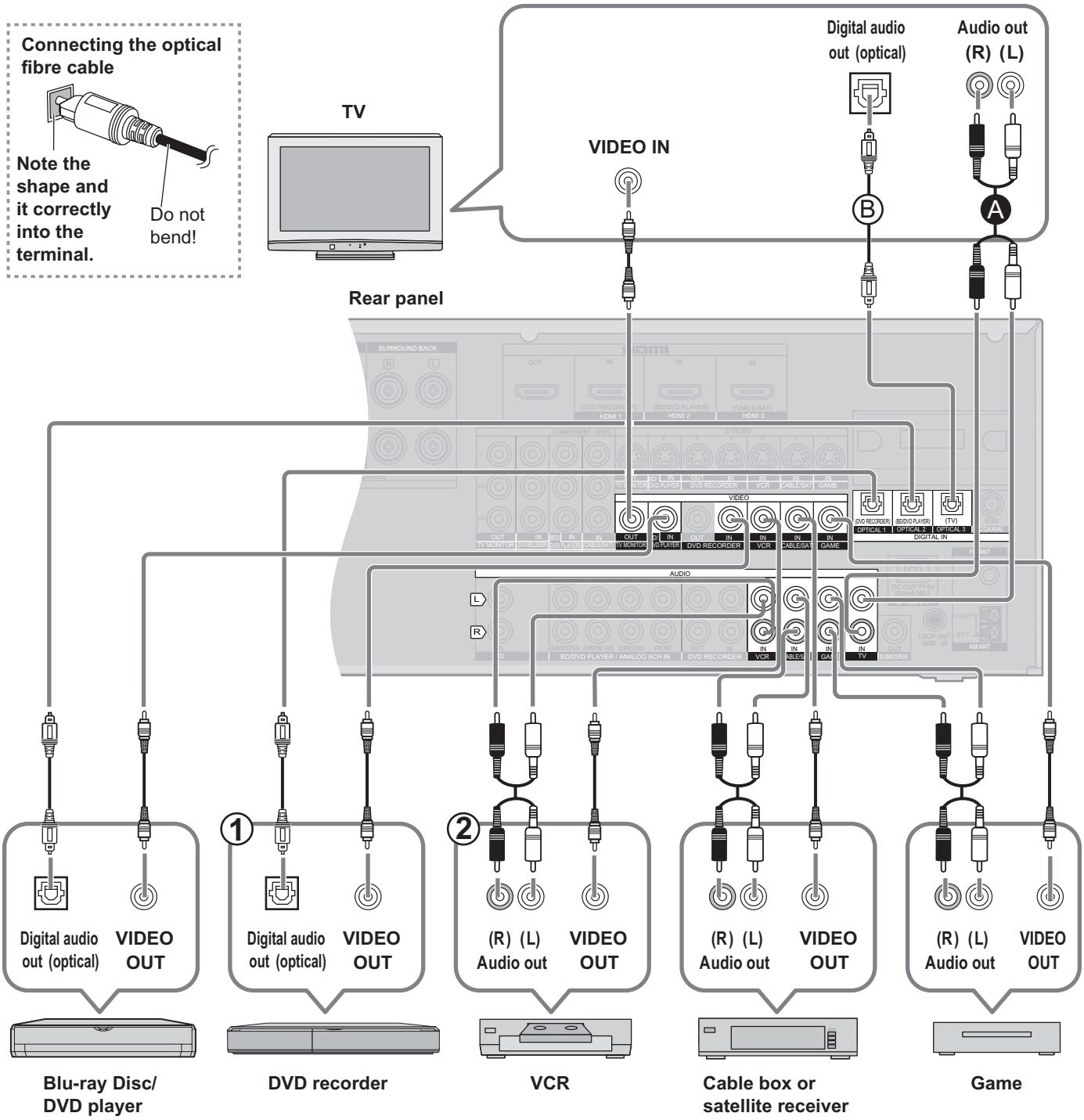

## 5.4.2. Connecting equipment with HDMI Terminal

### Basic connections

**Connecting equipment with HDMI terminal**

**Connection cable**

| Video and Audio cable |
|---|
| **HDMI cable** (not included)<br>Recommended part number:<br>RP-CDHG10 (1.0 m), RP-CDHG15 (1.5 m), RP-CDHG20 (2.0 m), RP-CDHG30 (3.0 m), RP-CDHG50 (5.0 m), etc. |

**HDMI cable notes**

- It is recommended that you use Panasonic s HDMI cable.
- This unit incorporates HDMI (V .1.3 with Deep Colour) technology.
- Please use High Speed HDMI Cables that have the HDMI logo (as shown on the cover).
- When outputting 1080p signal, please use the HDMI cables 5.0 meters or less.

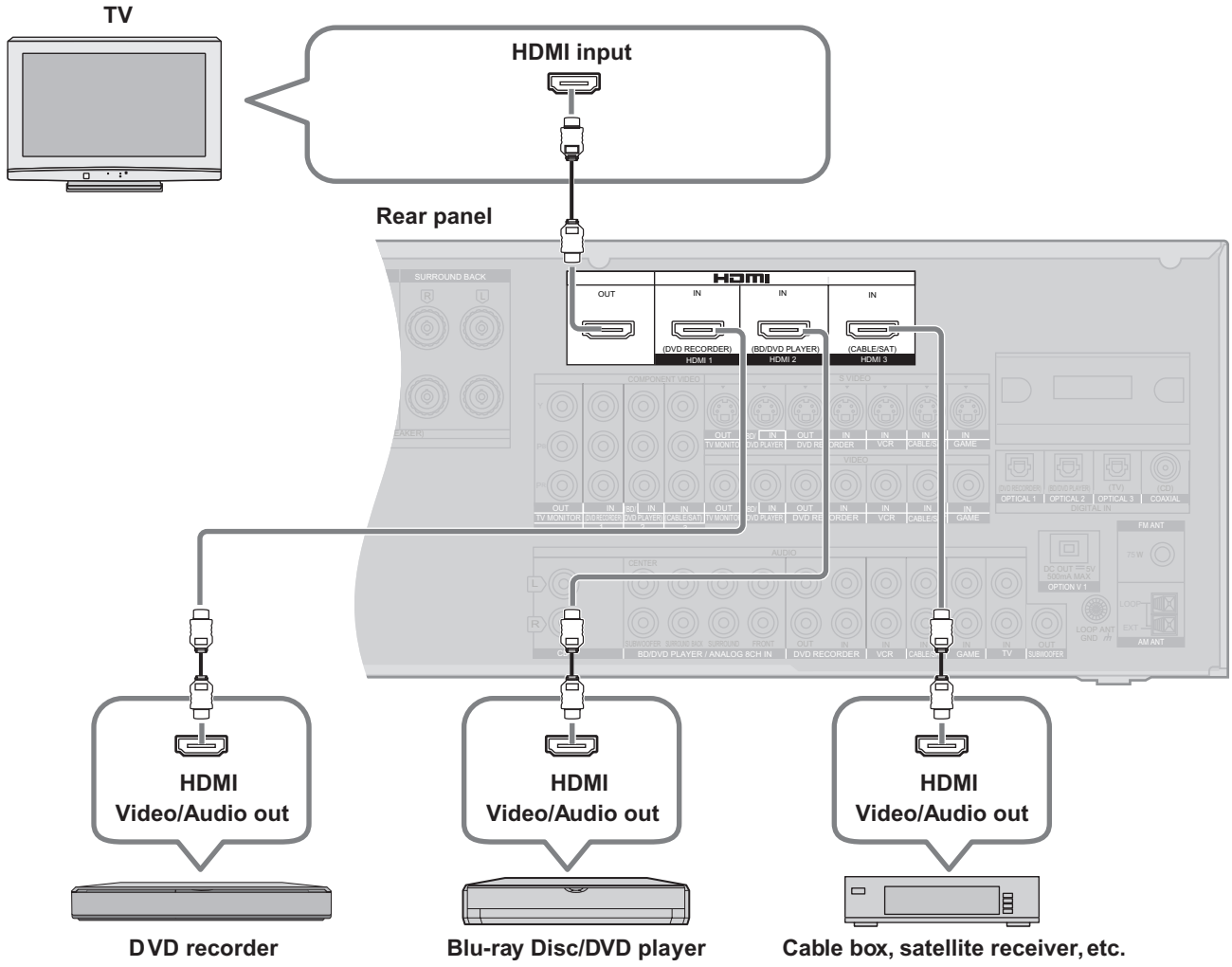

## 5.4.3. S Video and audio Terminals

### Connecting cables to S video and audio terminals

**Connection cable**

| Video cable | |
|---|---|
| **S VIDEO connection cable** (not included) | |
| **Audio cable** | |
| **Optical fibre cable** (not included) | **Stereo phono cable** (not included) White (L) Red (R) |

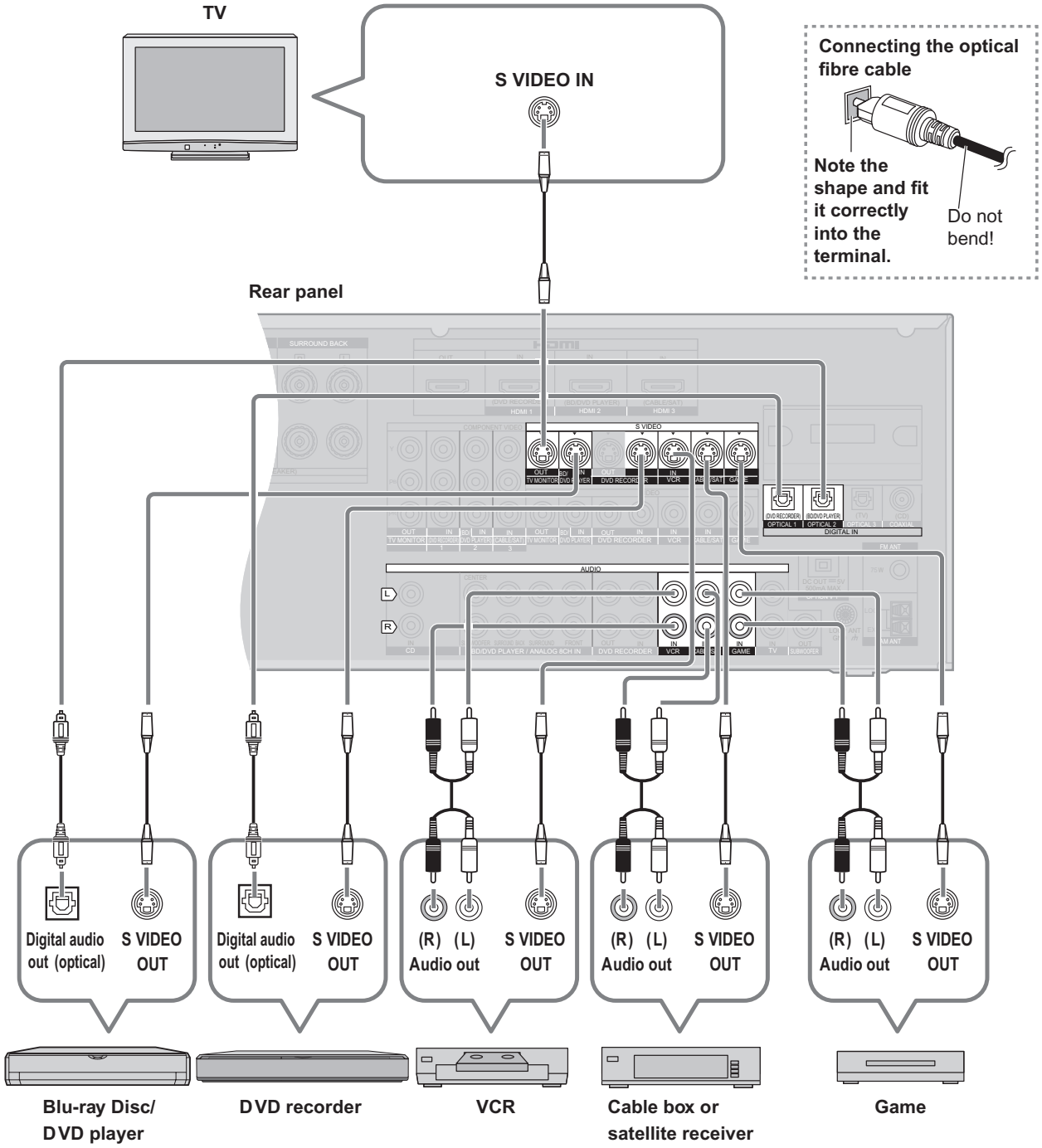

## 5.4.4. Component and audio terminals

### Connecting cables to component and audio terminals

The component video terminals can produce more accurate colours than the S video terminals.

**Connection cable**

| Video cable | Audio cable | |
|---|---|---|
| **Video connection cable** (not included) | **Optical fibre cable** (not included) | **Stereo phono cable** (not included) White (L) Red (R) |

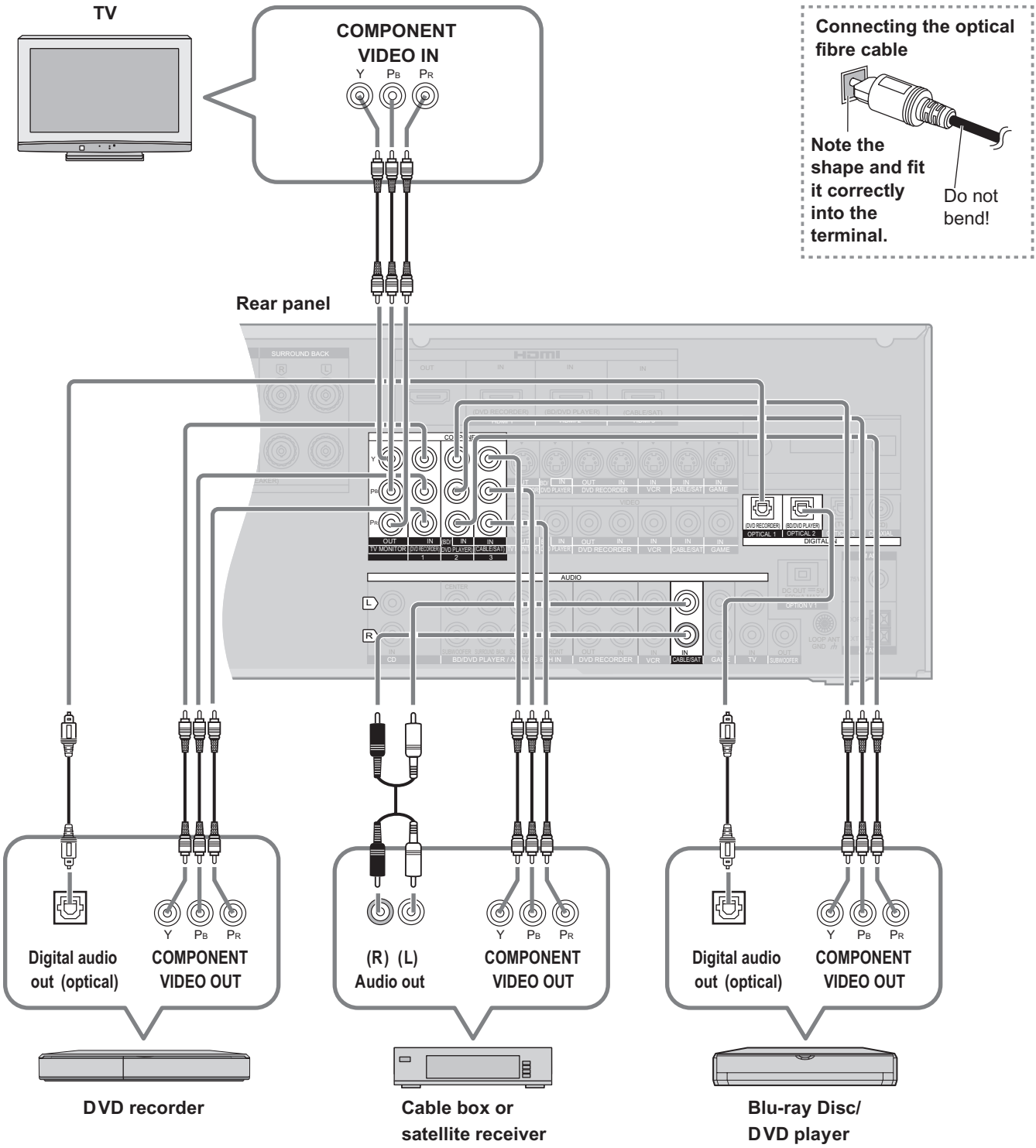

## 5.4.5. Other connections

### Other connections

**Connection cable**

| Video cable | |
|---|---|
| **Video connection cable** (not included) | **S VIDEO connection cable** (not included) |
| **Audio cable** | |
| **Coaxial cable** (not included) | **Stereo phono cable** (not included) White (L) Red (R) |

**To enjoy analogue sounds**

**Rear panel**

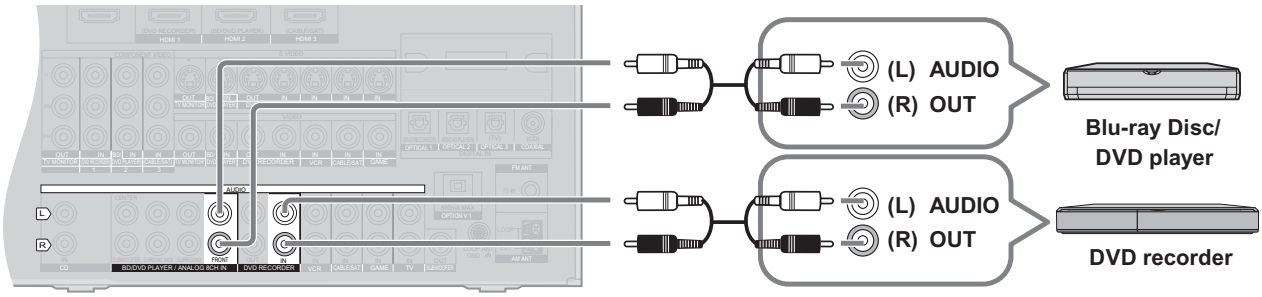


**To enjoy high-quality analogue sounds (Analogue 8-channel connections)**

**Rear panel**

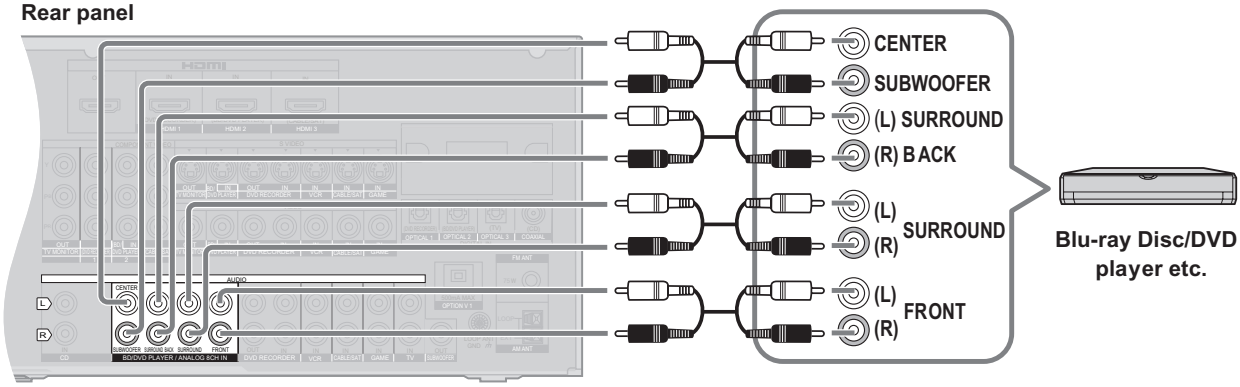


**To connect the unit to a CD player**

Make either digital audio (COAXIAL) output connections (Ⓐ) or analogue audio output connections (Ⓑ) according to your equipment and preference.

**Rear panel**

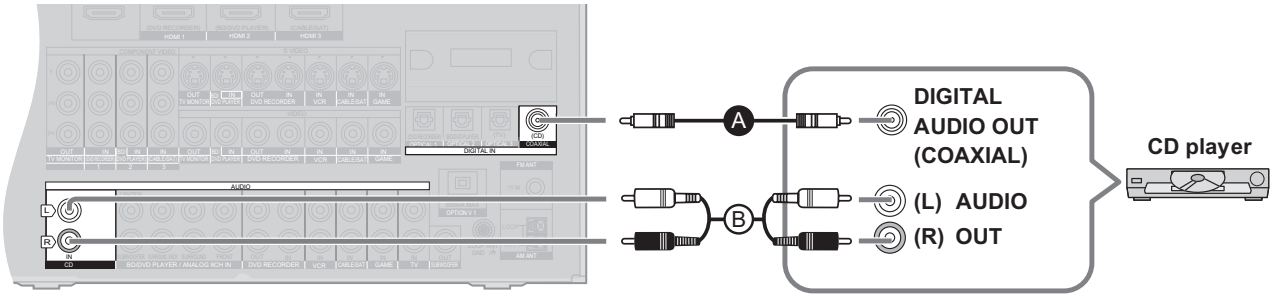

# Other connections

## To connect the unit for audio or picture recording

You can record audio or pictures to the equipment connected to DVD recorder output terminal (AUDIO, VIDEO, S VIDEO).

**Rear panel**

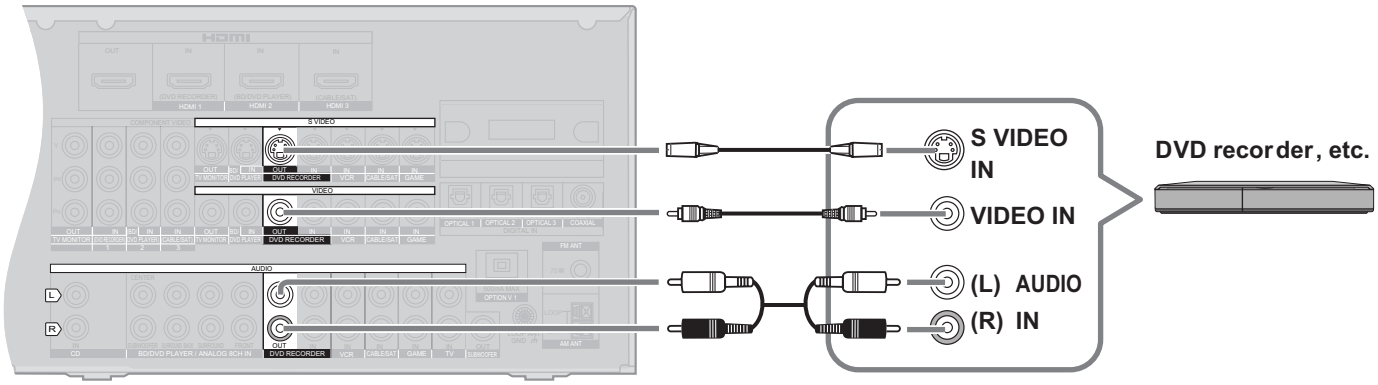


**Note**

• Connect the recording unit and source unit using the same cable.

## To connect the unit to a video camera etc.

These terminals are convenient for equipment you want to connect only temporarily.

**Note**

• Use a cable, or that belongs to the same type as the video cable you used for connecting the unit to your TV.

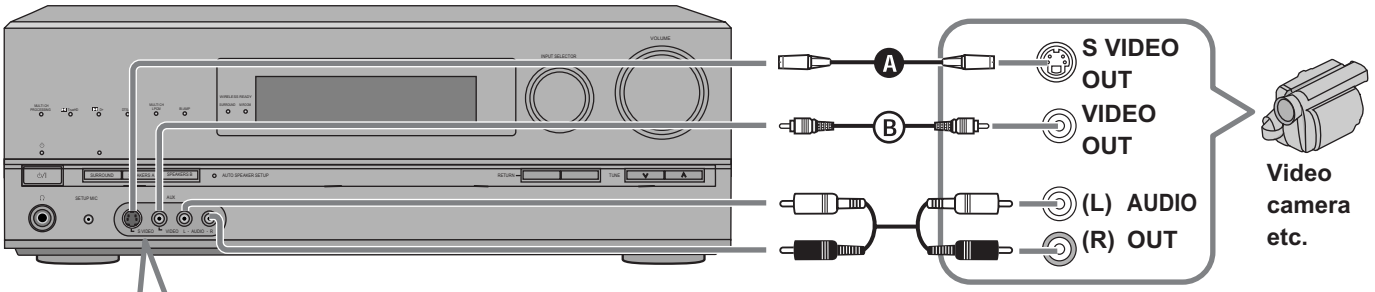


### How to attach or remove the front terminal cover

• Attaching the cover is recommended to protect terminals when not in use.

**• To attach**

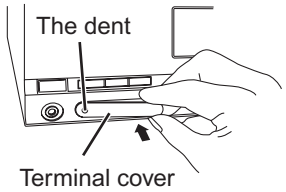


Place the dent on the left to insert.

**• To remove**

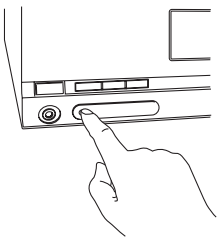

Press the dent.

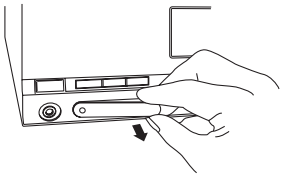

Hold the protrusion to remove.

## 5.4.6. For speakers

# Connecting other speakers

### To connect bi-wire speakers

Make sure to select YES in Making bi-wire setting below when you connect the unit to bi-wire speakers. The speakers do not produce adequate sounds unless you make this setting.

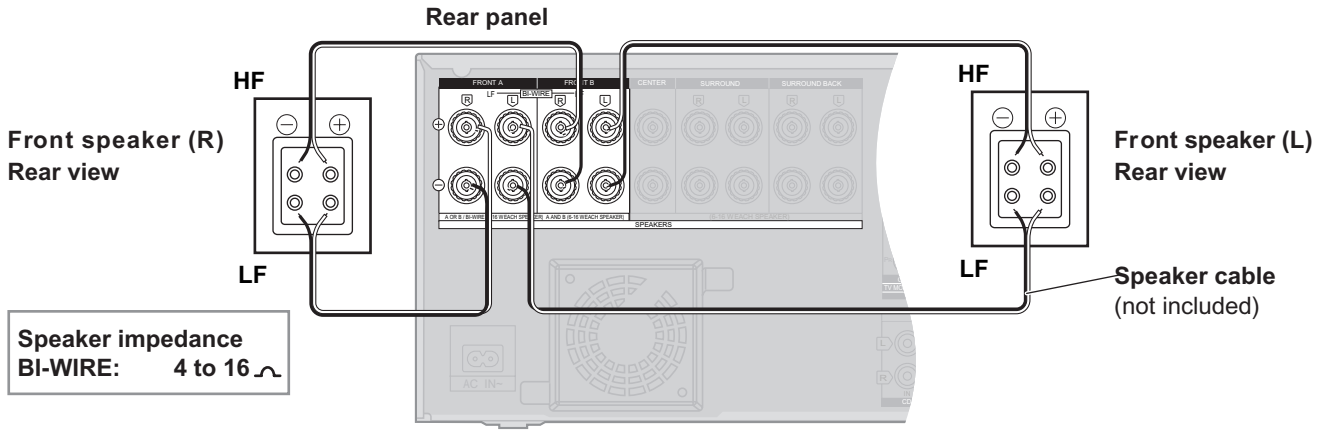


**Note**

- Make sure to connect speakers HF terminals with the unit s FRONT B terminals, and speakers LF terminals with the unit s FRONT A terminals.
- Different amps for high frequency and low frequency signals produce BI-AMP stereo sounds that are clearer and higher in audio quality when you play on 2 channels sources containing analogue audio and 2-channel PCM signals.

# Making bi-wire setting

Make sure to select YES when you connect the unit to bi-wire speakers. The speakers do not produce adequate sounds unless you make this setting.

1. **To enter the SETUP**
2. **Press [▲][▼] to select *LR BI-WIRE* , and press [OK] to confirm.**
3. **Press [▲][▼] to select *YES* , and press [OK] to confirm.**

   ***YES*** : When bi-wire speakers are connected
   ***NO*** : When bi-wire speakers are not connected
   Factory setting: ***NO***
4. **To finish the setting**

### To connect a second pair of front speakers (SPEAKERS B)

Make the following connections when you wish to install a second pair of speakers in another room and enjoy music there.

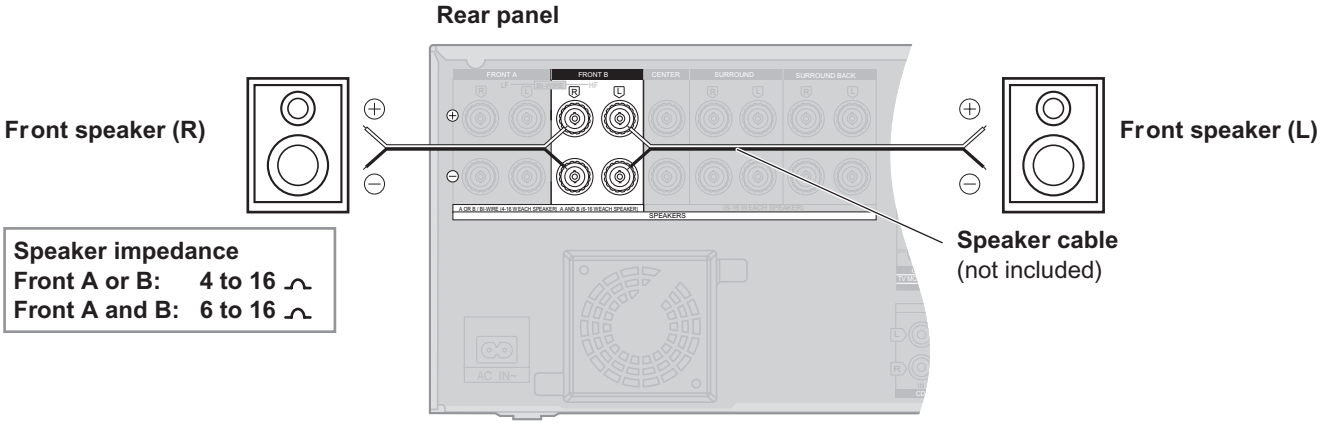

### To enjoy wireless audio with SH-FX67

You can connect left and right surround speakers wirelessly by using Panasonic SH-FX67 (a set consisted of a digital transmitter and a wireless system sold separately) with the unit.
To use these options, insert the digital transmitter into the unit s digital transmitter terminal and connect surround speakers to SH-FX67 s wireless system. See SH-FX67 s operating instructions for details.

**Rear panel**

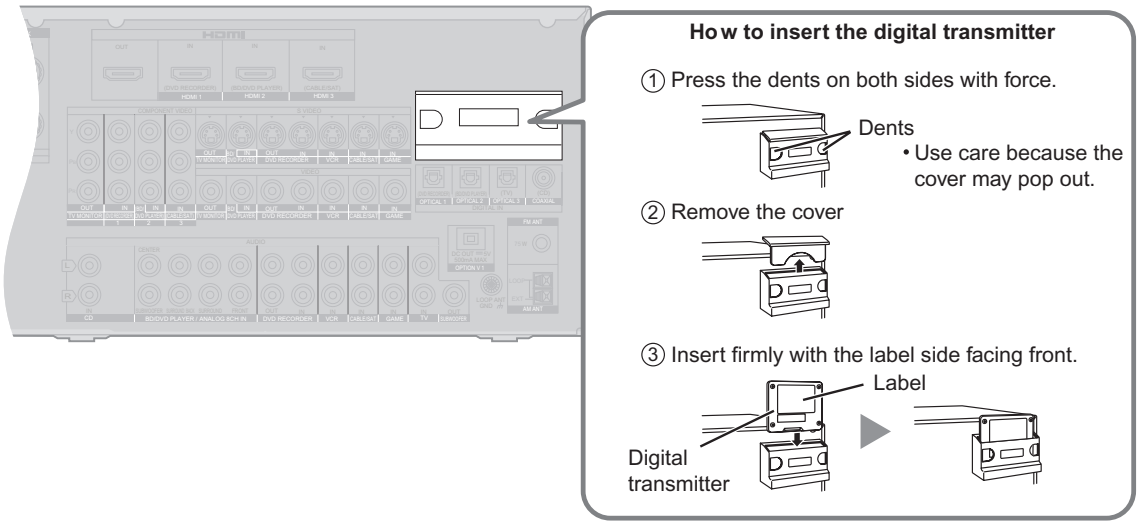


**Note**

- You can enjoy wireless speakers in another room (MULTI ROOM). To use multi room function, make sure to select ***MULTI ROOM*** in Setting wireless speakers .
- When ***MULTI ROOM*** is set, the surround speakers cannot be used wirelessly.
  When the surround speakers are used wirelessly, you cannot set ***MULTI ROOM .***
- By using 2 sets of SH-FX67, you can enjoy 7.1 channel playback, making the surround speakers and surround back speakers wireless. In that case, make ID number setting.
- Setting of the surround selector on SH-FX67 is necessary for 7.1 channel playback. See SH-FX67 s operating instructions for more information.

## Connecting antennas

When finished connecting antennas, tune the radio station once and fix the antennas where reception is best

**Rear panel**

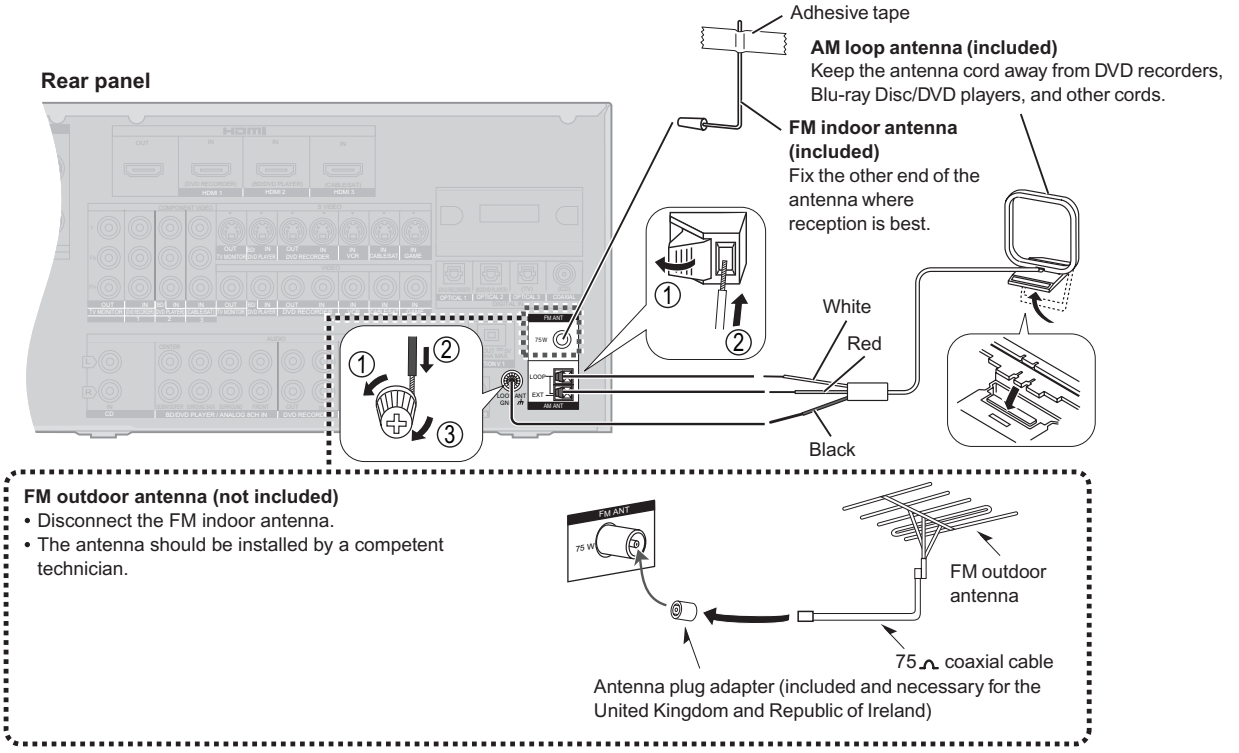

# 6 Self-Diagnosis and Display Function

This unit is equipped with the self diagnosis display function, which alarms faulty operation with error code. Use this function during servicing.

## 6.1. Automatically Displayed Error Codes

An error code automatically appears on the display (FL Display) when faulty operation is detected. Refer to Fig. 6.1.

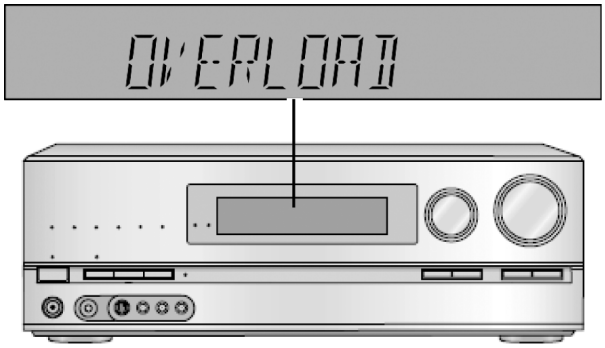


Fig 6.1

## 6.2. Display Details

### 6.2.1. Display Details Table 1

Refer to the following table.

| LCD Display | Symptom | Cause and Remedy |
|---|---|---|
| Overload | Speaker short, amplifier failure | Speaker short and failure in power amplifier, pre-amplifier circuit. Check for faulty parts and replace with new parts if necessary. |
| | Temperature protection activated | |
| F61 | The abnormalities in an output or power supply circuit of POWER AMP | In normal operation, when DCDET2 goes to “L” (Low) (Not during POWER OFF condition), F61 appears on FLDisplay for 1 second and PCONT goes to “L” (Low). This is due to speaker output has DC voltage or fan is not working. |
| F70 | Communication error between sub microprocessor and its peripheral LSI | Failure sub microprocessor and its peripherals LSI. Check for faulty parts and replace with new parts if necessary. |
| F76 | When the power is turned on, the unit power automatically turns off; the power cannot be turned on | Failure in the power circuit system of unit. This may happen when the direct current electricity is supplied to speaker terminals. Check for the above and replace with new parts if necessary. |

### 6.2.2. Display Details Table 2

Refer to the following table.

| Message | Cause/countermeasure |
|---|---|
| U701 | The equipment connected by the HDMI cable is not compatible with the unit’s copyright protection technology. |
| U704 | The unit has received a signal for a picture format that is incompatible with the HDMI connection. Check the settings of the connected equipment. |
| U703 | Should anything unusual happen using an HDMI connection:<br>Consult your dealer if the sign remains on the display after these steps.<br>●Turn the connected equipment off and on again.<br>●Pull out the HDMI cable then reinsert it.<br>●Reduce the number of equipment connected in series to the HDMI terminal if exceeding 2 units. |
| REMOTE 1 or REMOTE 2 | Match the modes on the main unit and the remote control. |
| CANCEL MUTING FUNCTION | Muting is on.<br>Press [MUTING] on the remote control to cancel the function. |
| NO C AND LS/RS SPEAKERS | Center and surround speakers are set as absent. Change their setting to present. |

| Message | Cause/countermeasure |
|---|---|
| NO LS/RS SPEAKERS | Surround speakers are set as absent. Change their setting to present. |
| NO LS/RS AND SBL/SBR SPEAKERS | Surround and surround back speakers are set as absent. Change their setting to present. |
| NO SBL/SBR SPEAKERS | Surround back speakers are set as absent. Change their setting to present. |
| NOT POSSIBLE FOR ANALOG 8CH INPUT | You are trying to use the effect unavailable for analogue 8-channel playback. |
| NOT POSSIBLE FOR THIS INPUT SOURCE | You are trying to use the effect unavailable for the current input source. |
| PCM FIX (flashing) | The unit is in the “PCM FIX” mode. Cancel this mode. |
| SELECT SPEAKER A | “SPEAKERS A” is off. Select “SPEAKERS A”. |
| SPEAKER ARE OFF | “SPEAKERS A” and “SPEAKERS B” are off. Select “SPEAKERS A” or “SPEAKERS B”. |
| NOT SUPPORT FOR THIS WIRELESS SYSTEM | Not compatible with this wireless system. |

## 6.3. Overload/Shutdown Detection internal Condition

It detects OVERLOAD, POWER MALFUNCTION with [THRM_DET], [SHORT_DET] and [DC_DET] input port. It detects the following condition depending on the input of the port as below table.

(H: DC around 5V / L: DC around 0V)

| PROT | | | Detection of malfunction | Display and operation |
|---|---|---|---|---|
| SHORT_DET | THRM_DET | DC_DET | | |
| H | L | H | Normal | ---- |
| H | H | H | High Temp | Refer to ‘THERMAL PROTECTION’ |
| L | L | H | Speaker short Malfunction of Amplifier | [OVERLOAD] / POWER OFF |
| L | H | H | Detection of THERMAL PROTECTION | |
| - | - | L | Detection of POWER MALFUNCTION | [_ _ _F76_ _ _] / POWER OFF |

## 6.4. Overload/Thermal Detection Display

When overload is detected, automatic POWER OFF will our. But if any key on the remote control other than the [POWER] key is pressed before that, the scroll display will show [SWITCH_OFF_POWER]/ Then, 1 second after display of message, [OVERLOAD] will be shown on the scroll display.

## 6.5. Activating Self Diagnosis Function (Service Mode)

This mode can be used during servicing.

1. Plug the AC cord to the power source. Press and hold down the [OK] button and the [SPEAKER A] button, and then press the [POWER] button at the same time.

2. The Message, [SERVICE] appears on the display for three seconds, and then it will display the following. Refer to Fig.6.2.

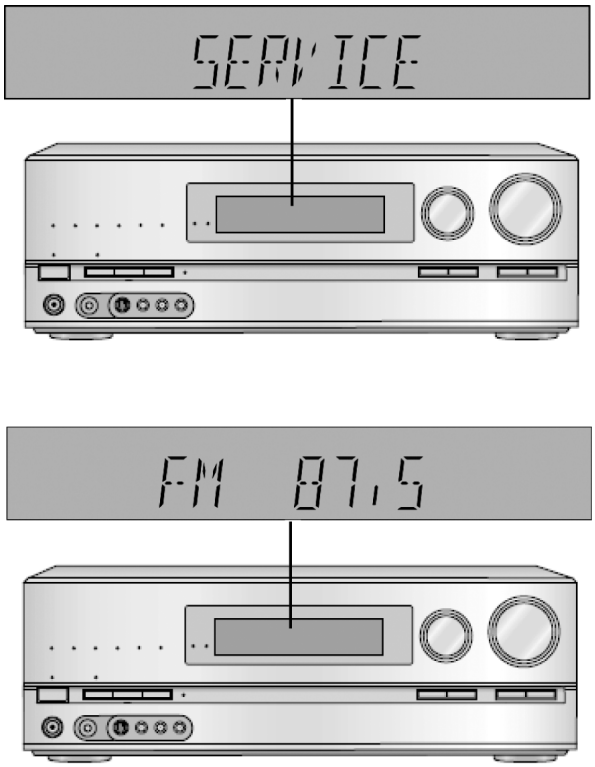


Fig 6.2

3. When the [SPEAKER A] button is pressed, the current program filing number [M45_XXXX] appears. The XXXX digit indicates the ROM checksum used for ROM collection, and if the unit is not loaded with ROM, “NO” appears.

To Confirm the HDMI µP software version: When [SPEAKER B] button is pressed, [H21_XXXX] is displayed.

To confirm the DSP firmware version: When ‘SURROUND’ button is pressed, like ‘D1.02/2.20’ is displayed for 3 seconds.

## 6.6. Returning to Normal Display

Press the [POWER] button on the unit to exit the function. The power is turned off

## 6.7. Activating Self Diagnosis Function (Doctor Mode)

This mode can be used during servicing.

1. Plug the AC adapter to the power source. Press and Hold down the [SETUP] button and the [SPEAKER A] button, and then press the [POWER] button at the same time.
2. Initialize all the setting and set the frequency “93.4MHz” to Tuner.
   The message, “_DOCTOR_” appears on the display for three seconds, and then it will display the following. Refer to Fig. 6.3.

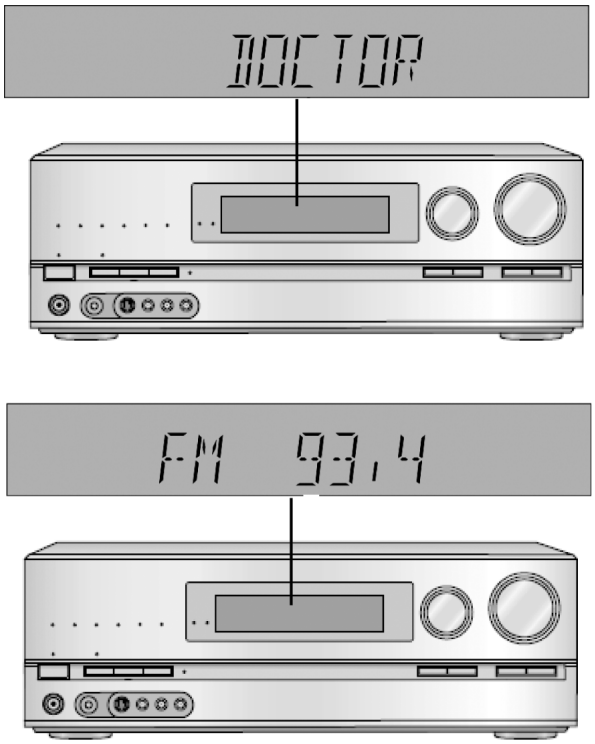


Fig 6.3

3. Doctor mode function at some remote control codes as below table.

| Remote Control | Test Mode Function and settings | | | |
|---|---|---|---|---|
| | Selector | Surround | Other settings | Vol/Tone |
| CH 1 | TUNER | OFF | Frequency: FM min. | -48dB/0dB |
| CH 2 | TUNER | OFF | Frequency: FM max. | -48dB/0dB |
| CH 3 | TUNER | OFF | FM 98.3MHz | -18dB/0dB |
| CH 4 | TUNER | OFF | Frequency: AM min. | -48dB/0dB |
| CH 5 | TUNER | OFF | Frequency: AM max. | -48dB/0dB |
| CH 6 | TUNER | OFF | AM 765kHz (9kHz/step) | -18dB/0dB |
| CH 7 | TUNER | OFF | AM 770kHz (10kHz/step) | -18dB/0dB |
| CH 8 | If the input selector is TUNER, auto tuning function is started to upward on current frequency. | | | |
| CH 9 | If the input selector is TUNER, auto tuning function is started to downward on current frequency. | | | |
| CH 10 | All indicators of FL and LED are lit.<br>Note: After the setting, only 'POWER' button to 'Checker Command' code by the remote control can be entered. | | | |
| CH UP | Check Main uP software version. | | | |
| CH DOWN | Sub uP software version and HDMI uP software version are displayed at each time pressing. | | | |
| ≧10 | BD/DVD P. | ----- | All CH Output Mode | -18dB/0dB |
| MUTING | BD P. 8CH | ----- | | -18dB/0dB |
| INPUT SELECTOR | AUX | OFF | Analog | -18dB/0dB |
| PLIIx | CD | OFF | Analog | -18dB/0dB |
| NEO:6 | TV | OFF | Analog | -18dB/0dB |
| SOUND | BD/DVD P. | OFF | Analog | -18dB/0dB |
| DVD R. | DVD R. | OFF | Analog | -18dB/0dB |
| CABLE/SAT | CABLE/SAT | OFF | Analog | -18dB/0dB |
| BD/DVD P. | GAME | OFF | Analog | -18dB/0dB |
| OFF | BD/DVD R. | OFF | Digital (OPT 1) | -48dB/0dB |
| SFC MOVIE | BD/DVD P. | OFF | Digital (OPT 2) | -48dB/0dB |
| TV | TV | OFF | Digital (OPT 3) | -48dB/0dB |
| SFC MUSIC | CD | OFF | Digital (COAX) | -48dB/0dB |
| TEST | No change | SURROUND | If MIC is not inserted, scan the test noise out put channel with 500ms intervals | -18dB/0dB |
| | AUX | STEREO | If MIC is inserted, mic input is selected and it is output to speaker in analog mode | -18dB/0dB |
| DISPLAY | If the input selector is TUNER in E2 mode, Display Mode (PS/PTY/RT) is changed | | | |

## 6.8. Wireless Link

When [^^P^^^^^^] displaying. Power off, Except Pressing Main unit [TUNE ⋀] +Remote control [3] at the same time. All operation

is not function. (Volume adjustment or Mute also unfunction)

<FX67 Common frequency fixed method>

Preparation: Beforehand, press remote control [FM/AM], remote control side, will appear FM/AM code stage.

Below is operation of wireless frequency fixed method.

| Function | Button | Condition | Display |
|---|---|---|---|
| RF ch1 Fix<br>(Claim measure) | Main unit [TUNE ∨]<br>+Remote Control [4] (0xA00413) | When P-ON, Press 5sec above at the same time. | FL [^RF^^^CH1^] 3sec event display |
| RF ch2 Fix<br>(Claim measure) | Main unit [TUNE ∨]<br>+Remote Control [5] (0xA00414) | When P-ON, Press 5sec above at the same time. | FL [^RF^^^CH2^] 3sec event display |
| RF ch3 Fix<br>(Claim measure) | Main unit [TUNE ∨]<br>+Remote Control [6] (0xA00415) | When P-ON, Press 5sec above at the same time. | FL [^RF^^^CH3^] 3sec event display |
| RF ch AUTO | Main unit [TUNE ∨]<br>+Remote Control [7] (0xA00416) | When P-ON, Press 5sec above at the same time. | FL [^RF^^^AUTO^] 3sec event display |

# 7 Assembling and Disassembling

**“ATTENTION SERVICER”**

Be careful when disassembling and servicing.

Some chassis components may have sharp edges.

**Special Note:**

1. **This section describes the disassembly procedures for all the major printed circuit boards and main components.**
2. **Before the disassembly process was carried out, do take special note that all safety precautions are to be carried out. (Ensure that no AC power supply is connected during disassembling.)**
3. **For assembly after operation checks or replacement, reverse the respective procedures. Special reassembly procedures are described only when required.**
4. **Do take note of the locators on each printed circuit board during reassembling procedures.**
5. **The Switch Regulator IC may have high temperature after prolonged use.**
6. **Use caution when removing the top cabinet and avoid touching heat sinks located in the unit.**

**CAUTION: HOT!!**
**PLEASE DO NOT**
**TOUCH THE HEAT SINK**

7. **Select items from the following index when checks or replacement are required.**

- Disassembly of Top Cabinet
- Disassembly and Checking of DSP P.C.B.
- Disassembly and Checking of Speaker P.C.B.
- Disassembly and Checking of D-Amp B (3CH)/ Fan P.C.B.
- Disassembly and Checking of SMPS/ AC Inlet P.C.B.
- Disassembly and Checking of D-Amp A (4CH) P.C.B.
- Disassembly and Checking of HDMI P.C.B.
- Disassembly and Checking of S-Video/ Video P.C.B.
- Disassembly and Checking of Wireless Adapter/ Digital/ D-Port P.C.B.
- Disassembly and Checking of Main P.C.B.
- Disassembly of Front P.C.B.
- Disassembly and Checking of Panel/ Headphone/ Volume P.C.B.

**CAUTION NOTE:**
Please use original screw and at correct locations.

Below shown is part no. of different screw types used:

| | |
|---|---|
| a :RHD30007-K2J | e :RHD30111-31 |
| b :RHD30119-K | f :RHN90001-1 |
| c :XYN3+C8FJK | g :XTW3+8TFJ |
| d :RHD26046-L | h :XTB3+10JFJ |

# 7.1. Disassembly Flow Chart

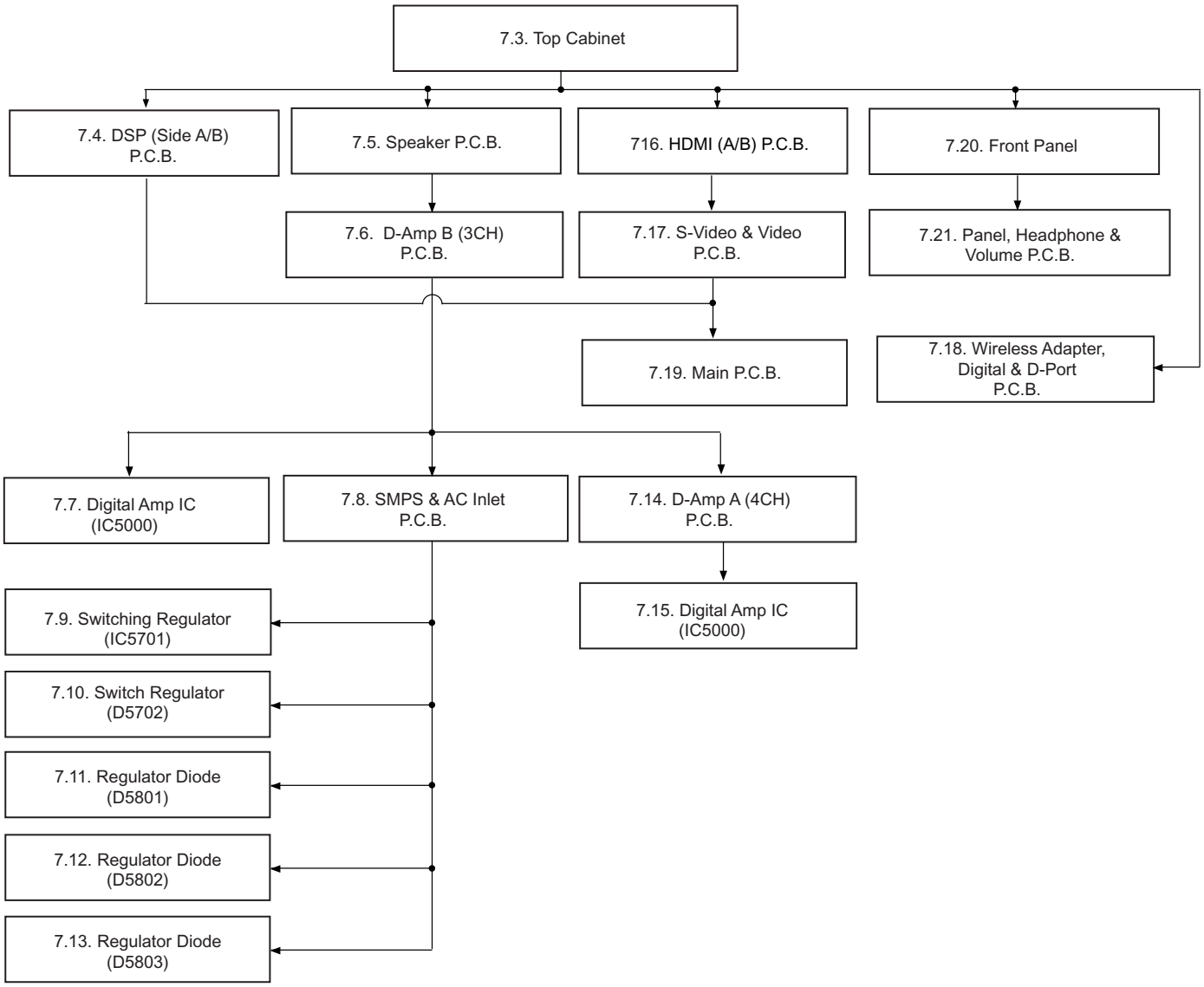

## 7.2. Main Components and P.C.B. Locations

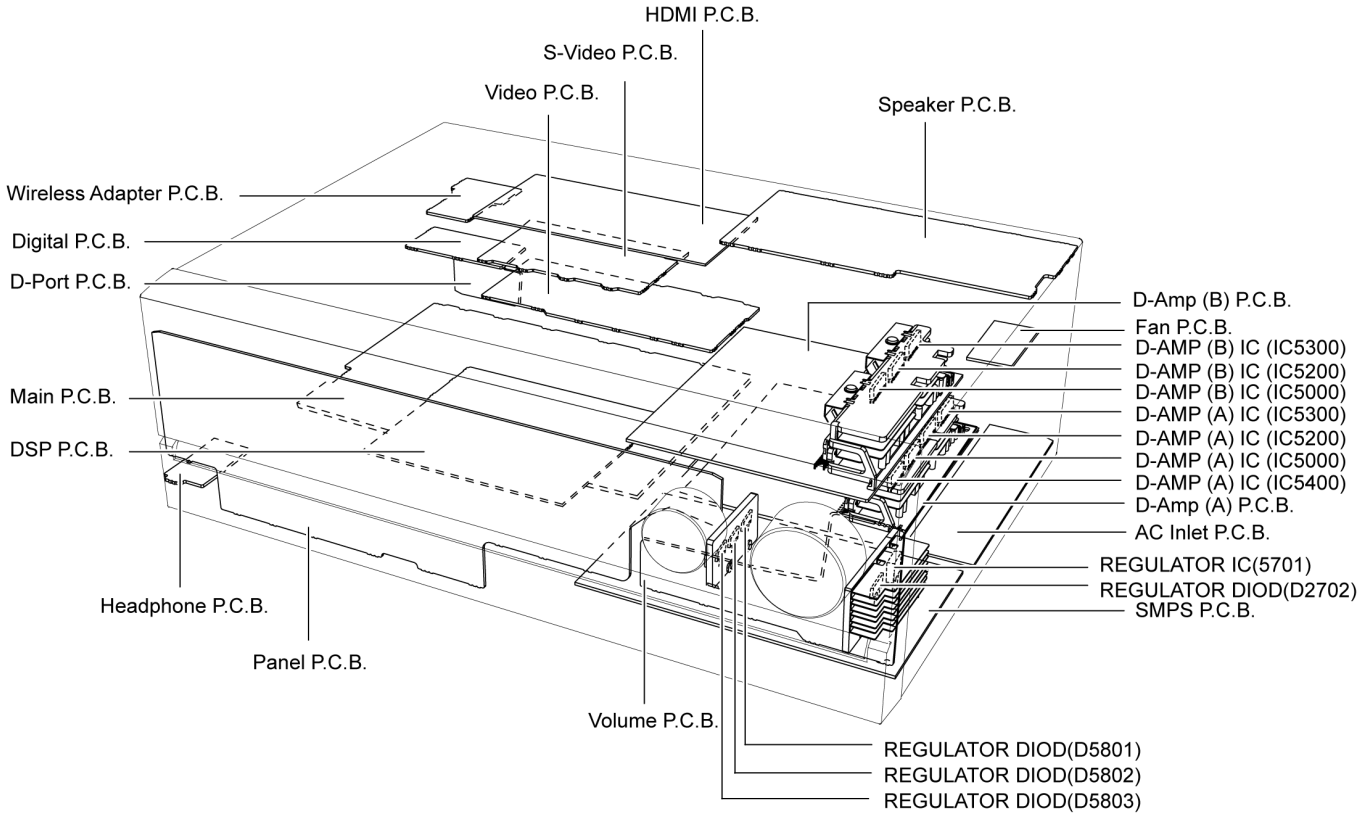

## 7.3. Disassembly of Top Cabinet

**Step 1** Remove 4 screws at the sides of the top cabinet.

**Step 2** Remove 5 screws at the rear of the top cabinet.

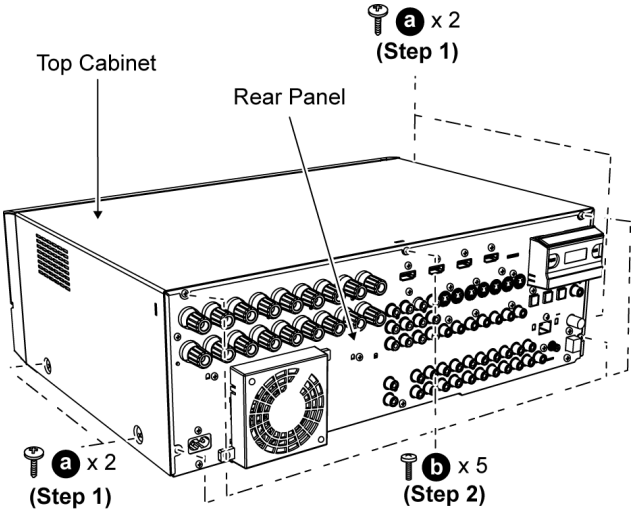


**Step 3** Lift up the top cabinet as arrow shown.

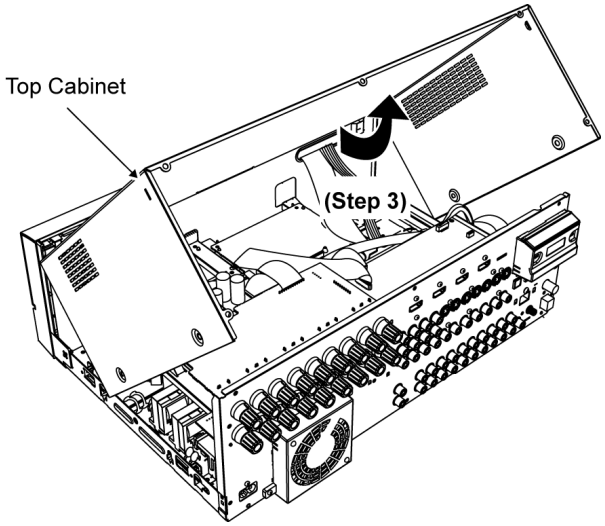


**Step 4** Remove the top cabinet.

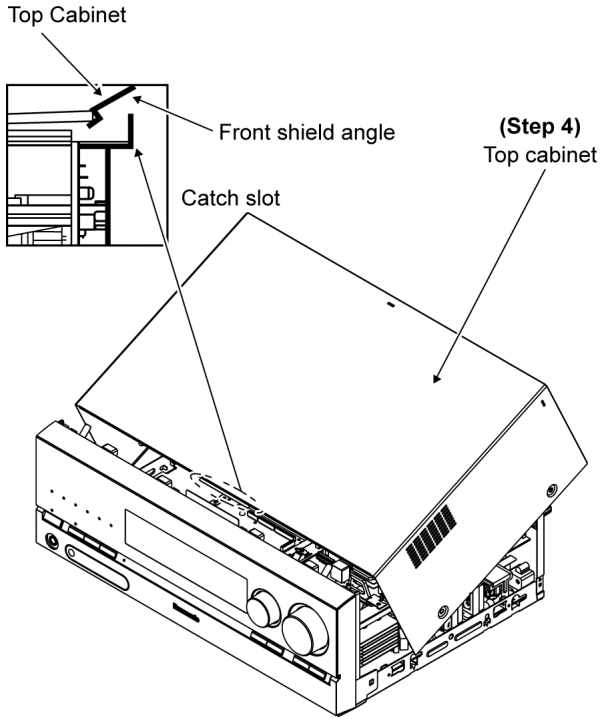


**NOTE:**
Be careful of the catch slot between front shield angle and front panel when removing the top cabinet from the unit.

## 7.4. Disassembly and checking of DSP (Side A/B) P.C.B.

- Follow (Step 1) to (Step 4) of Item 7.3.

- Checking Side A of DSP P.C.B.

**Step 1** Proceed to check Side A of DSP P.C.B..

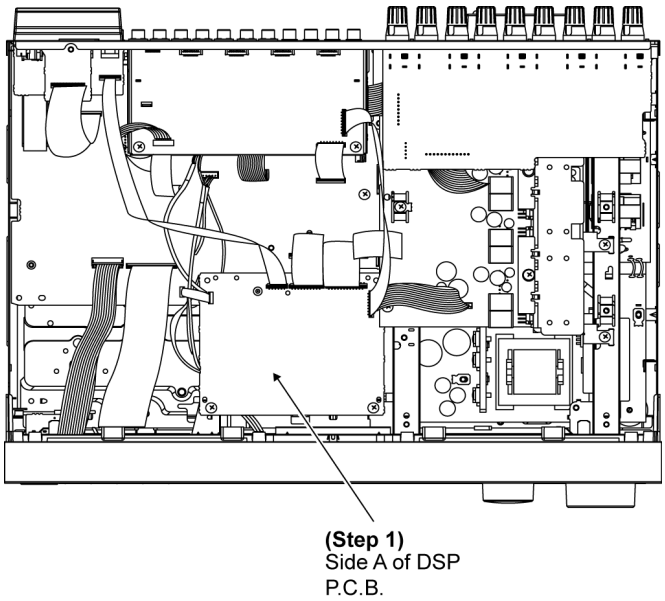


- Checking Side B of DSP P.C.B.

**Step 2** Remove 2 screws on DSP P.C.B..

**Step 3** Release DSP P.C.B. support on DSP P.C.B..

**Step 4** Flip the DSP P.C.B. as arrow shown.

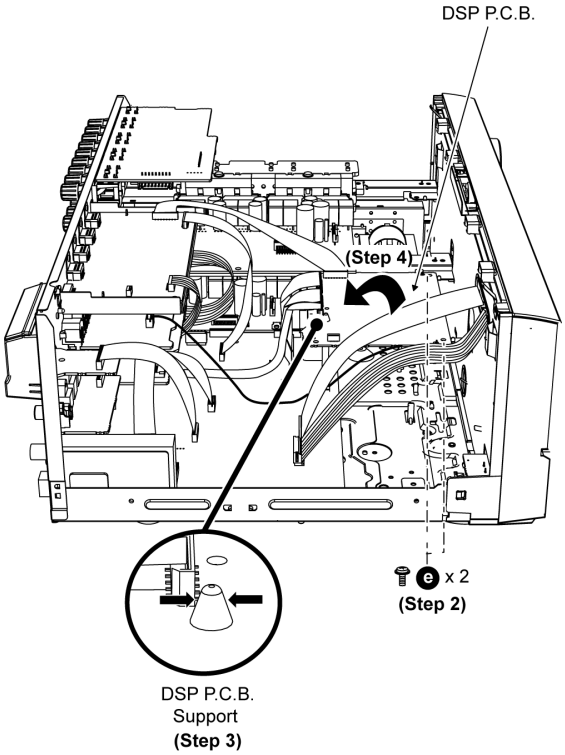


**Step 5** Proceed to check Side B of DSP P.C.B..

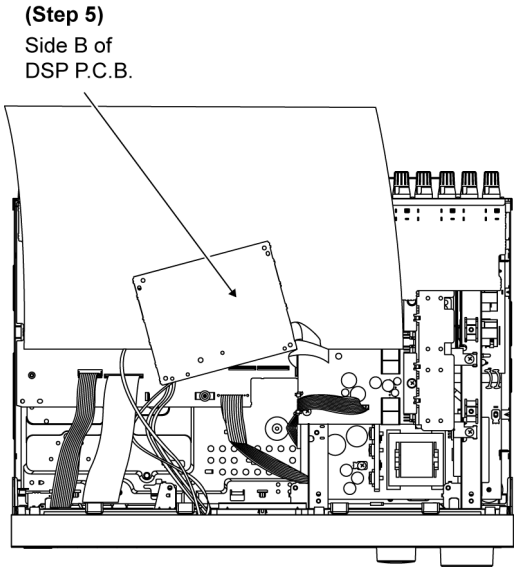


## 7.5. Disassembly and checking of Speaker P.C.B.

- Follow (Step 1) to (Step 4) of Item 7.3.

**Step 1** Remove 5 screws at rear panel.

**Step 2** Move the Speaker P.C.B. as arrow shown.

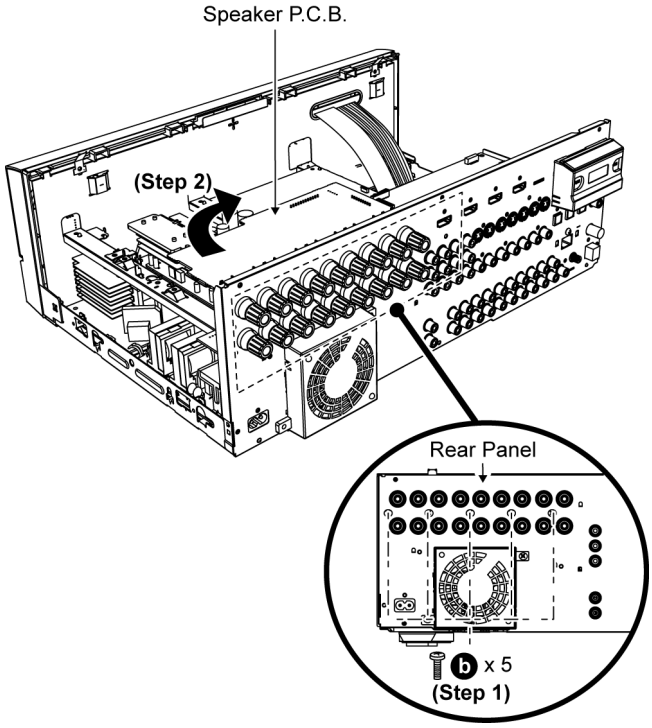


**Step 3** Proceed to check the Speaker P.C.B.

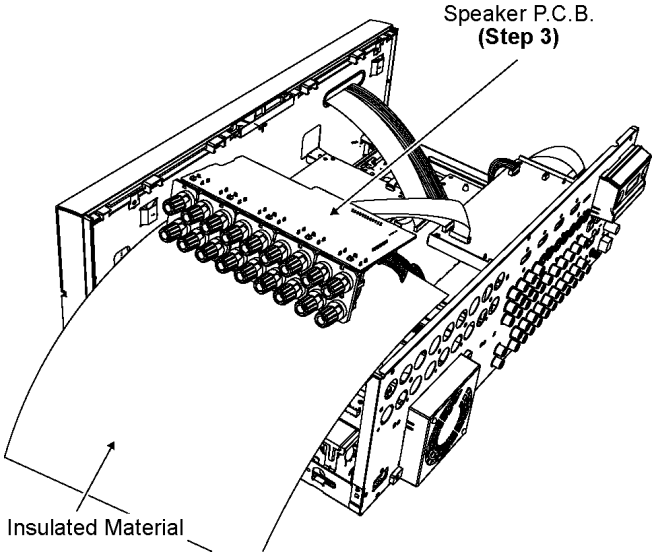


Caution: Insulate Speaker P.C.B. from other parts by insulating material (e.g.: plastic).

## 7.6. Disassembly and checking of D-Amp B (3CH) & Fan P.C.B.

- Follow (Step 1) to (Step 4) of Item 7.3.
- Follow (Step 1) to (Step 3) of Item 7.5.

**Step 1** Detach 12P cable at the connector (JW4602) on Speaker P.C.B..

**Step 2** Detach 9P cable at the connector (JW4603) on Speaker P.C.B..

**Step 3** Flip Speaker P.C.B. as arrow shown

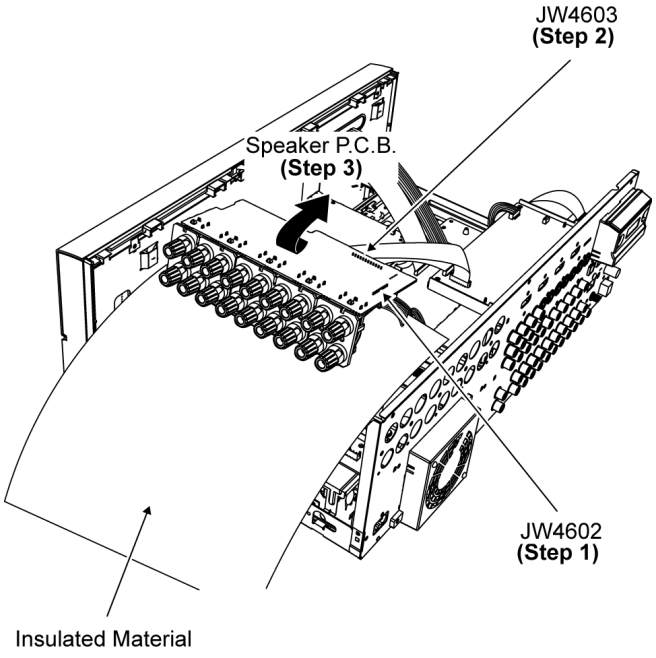


**Step 4** Cut 3 tie wraps.

**Note: During assembling it is necessary to use tie wraps.**

**Step 5** Attach 12P cable to the connector (JW4602) on Speaker P.C.B..

**Step 6** Attach 9P cable to the connector (JW4603) on Speaker P.C.B..

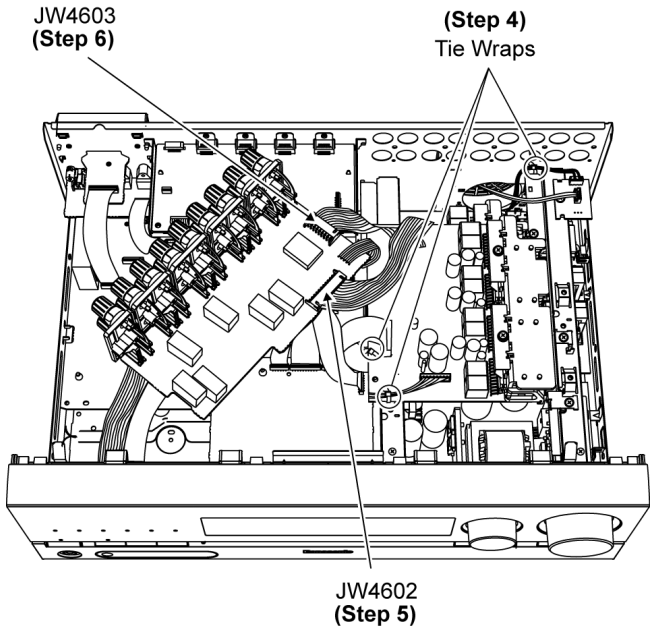


**Step 7** Remove 6 screws on D-Amp B (3CH) and Fan P.C.B.

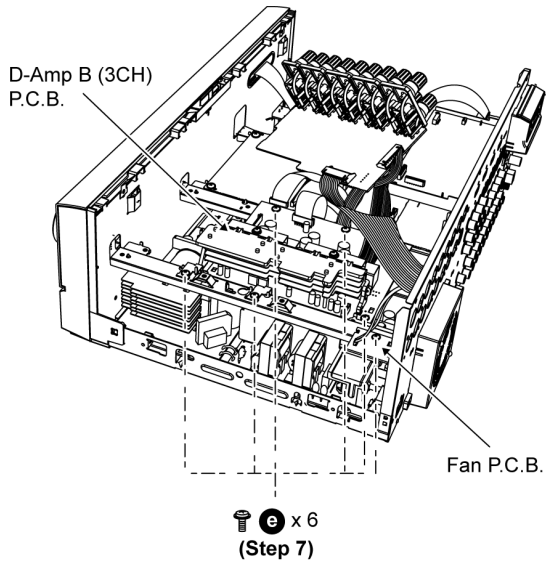


**Step 8** Remove 2 P.C.B. bracket on D-Amp B (3CH) P.C.B.

**Step 9** Flip D-Amp B (3CH) and Fan P.C.B. as arrow shown.

**Step 10** Move Speaker P.C.B. as arrow shown.

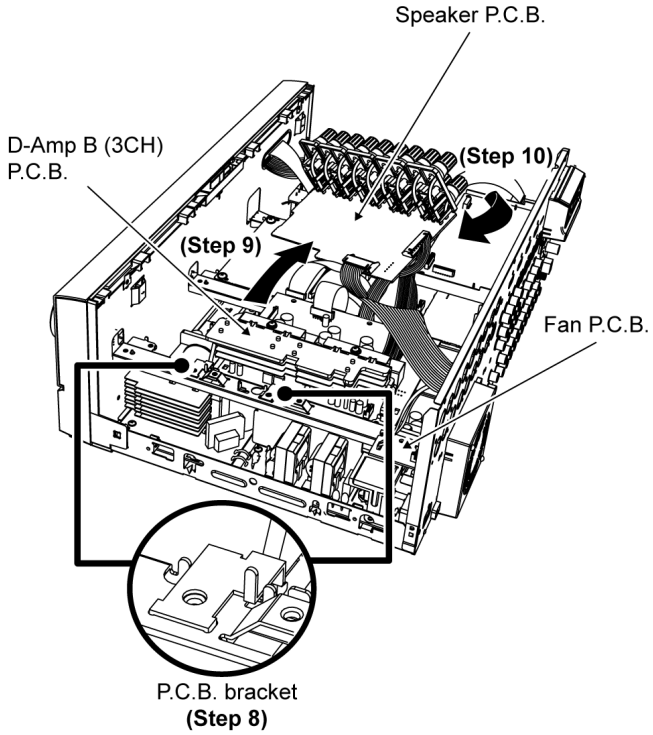


**Step 11** Proceed to check D-Amp B (3CH) and Fan P.C.B.

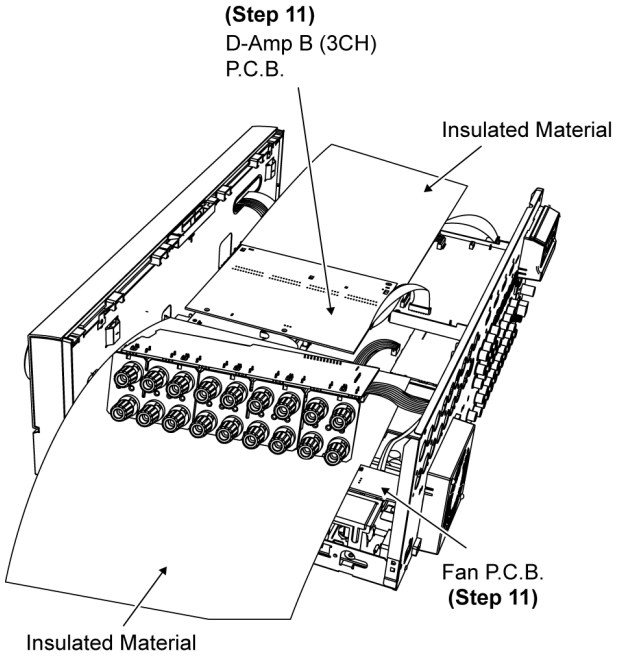


Caution: Insulate Speaker P.C.B. from other parts insulating material (e.g.: plastic).

**Special Note: During reassembling procedures, ensure the P.C.B. is seated properly at the locators.**

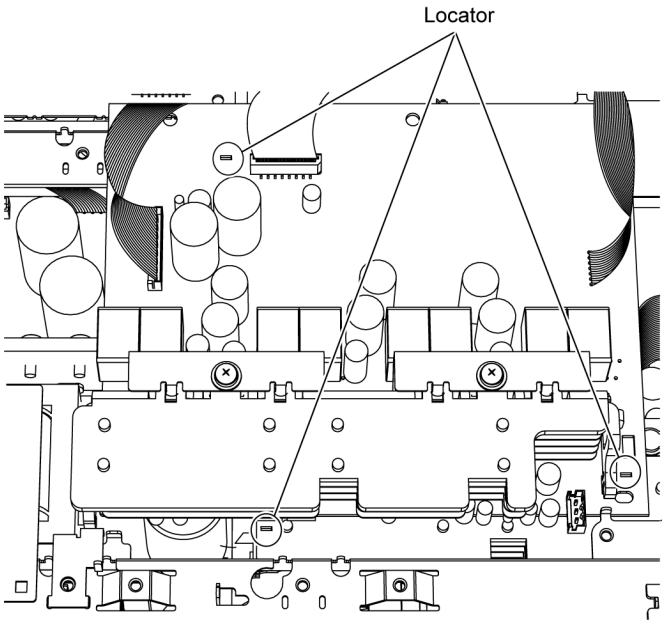


## 7.7. Replacement of Digital Amp IC (IC5000) of D-Amp B (3CH) P.C.B.

- Follow (Step 1) to (Step 4) of Item 7.3.
- Follow (Step 1) to (Step 3) of Item 7.5.
- Follow (Step 1) to (Step 8) of Item 7.6.

**Step 1** Detach 8P cable at the connector (CN5500) on D-Amp B (3CH) P.C.B.

**Step 2** Detach 17P FFC cable at the connector (CN5050) on D-Amp B (3CH) P.C.B.

**Step 3** Detach 9P cable at the connector (JW4603) on Speaker P.C.B.

**Step 4** Remove the D-Amp B (3CH) P.C.B. as arrow shown.

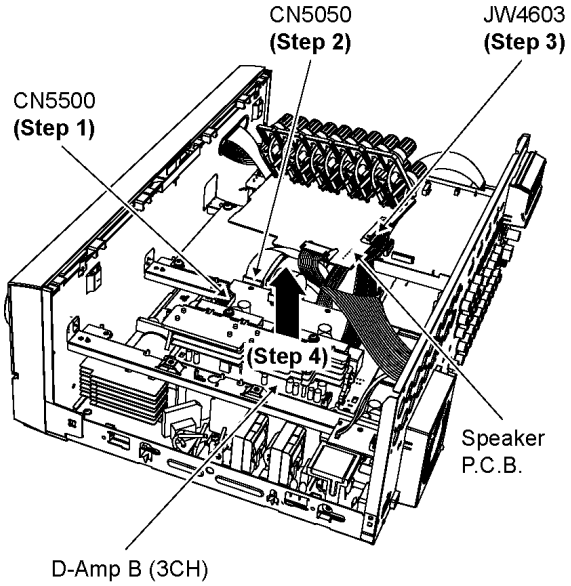


**Step 5** Desolder pins of the digital amp IC (IC5000) on the back side of D-Amp P.C.B.

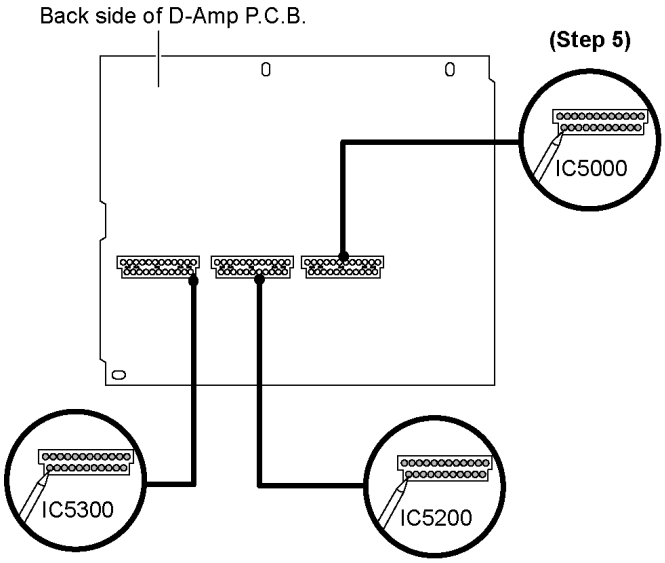


**Step 6** Remove 1 screw from the top of the heatsink unit A.

**Step 7** Remove the TR spring in the direction of the arrow.

**Step 8** Remove the digital amp IC (IC5000) from the heatsink unit A.

**Caution:** Handle the heatsink unit A with caution due to its high temperature after prolonged use. Touching it may lead to injuries.

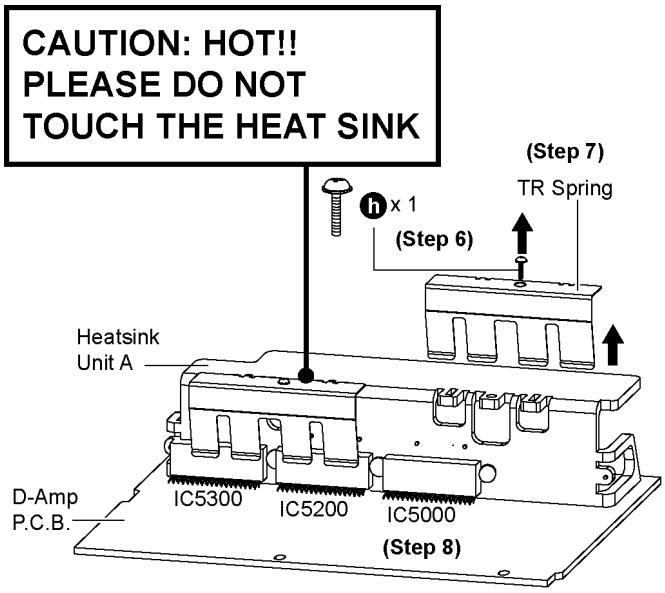


**Special Note:** For replacement of IC5200, IC5300, repeat the (Step 1) to (Step 8). Refer to the diagrams of D-Amp B (3CH) P.C.B. (Item 14.8) for location of the parts.

## 7.8. Disassembly and checking of SMPS & AC Inlet P.C.B.

- Follow (Step 1) to (Step 4) of Item 7.3.
- Follow (Step 1) to (Step 3) of Item 7.5.
- Follow (Step 1) to (Step 10) of Item 7.6.

**Step 1** Remove 2 screws on DSP P.C.B.

**Step 2** Move aside DSP P.C.B. as arrow shown.

**Step 3** Flip D-Amp P.C.B. as arrow shown.

**Step 4** Connect extension cable REEX0815 (17P cable from CN2808 to CN5050).

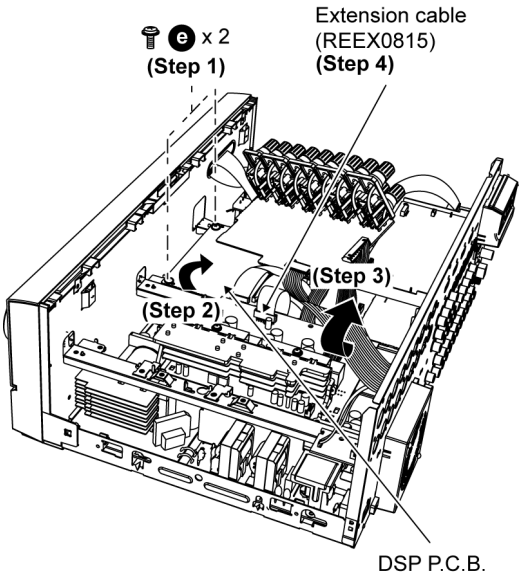


**Step 5** Remove 5 screws.

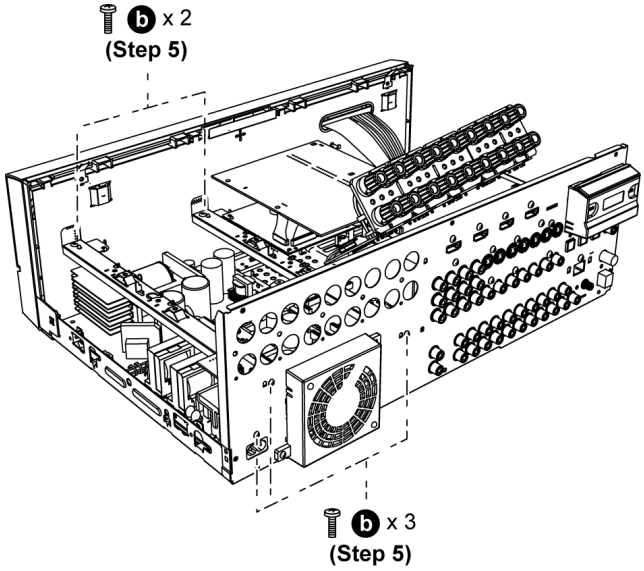


**Step 6** Move up the support bar as arrow shown and beware of the catches.

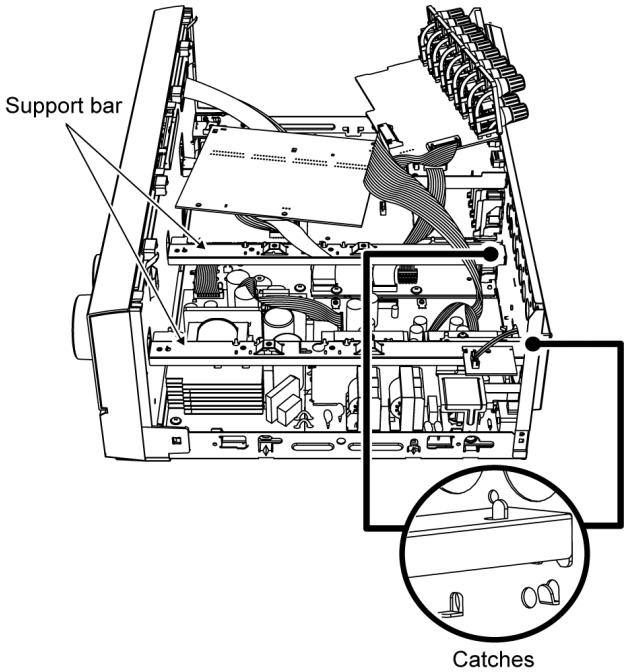


**Step 7** Remove 6 screws on SMPS and AC Inlet P.C.B..

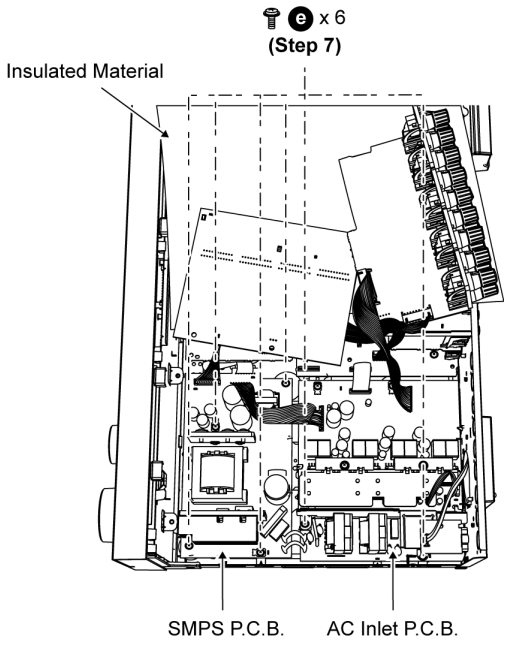


**Step 8** Connect extension cable REXX0651 (8P cable from H5801 to CN5500).

**Step 9** Remove AC Inlet shield plate unit.

**Step 10** Remove P.C.B. bracket.

**Step 11** Remove SMPS and AC Inlet P.C.B. as arrow shown.

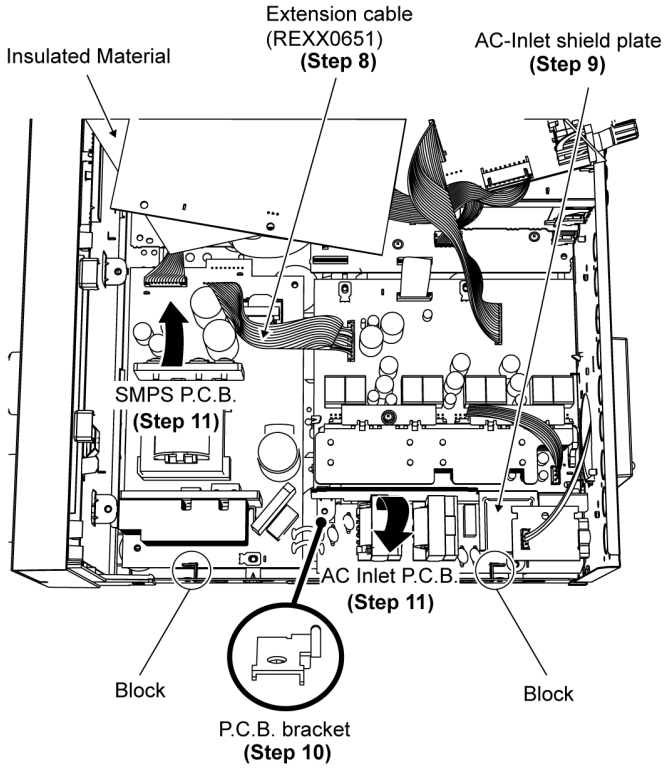


**Caution: During reassembling procedures, ensure the SMPS and AC Inlet P.C.B. is seated properly under the blocks.**

**Step 12** Proceed to check the SMPS and AC Inlet P.C.B.

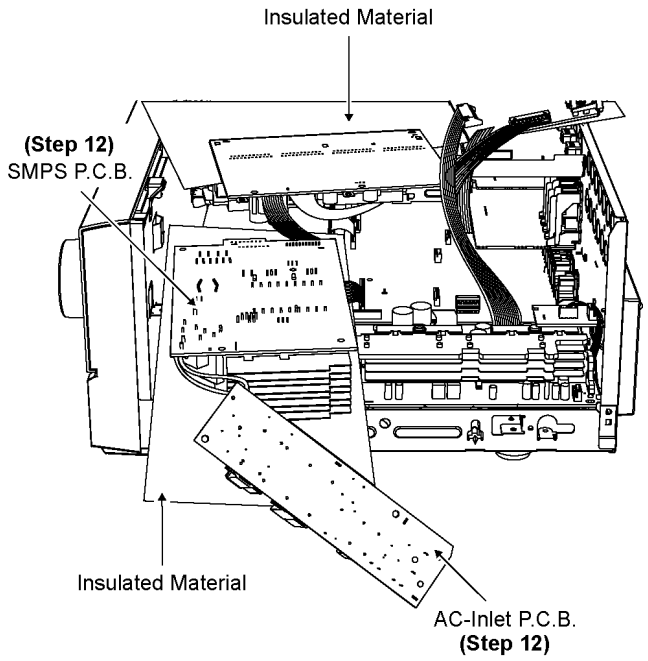


**Special Note: During reassembling procedures, ensure the P.C.B. is seated properly at the locators.**

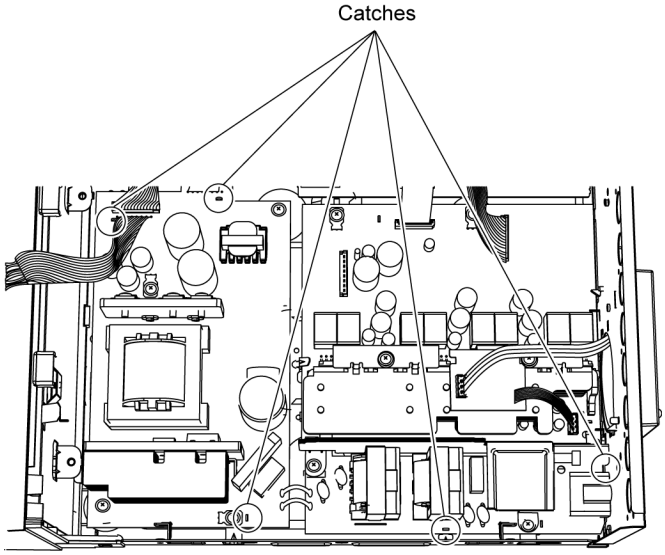


## 7.9. Replacement of Switch Regulator IC (IC5701)

- Follow (Step 1) to (Step 4) of Item 7.3.
- Follow (Step 1) to (Step 3) of Item 7.5.
- Follow (Step 1) to (Step 10) of Item 7.6.
- Follow (Step 1) to (Step 6) of Item 7.8.
- Follow (Step 9) to (Step 11) of Item 7.8.

**Step 1** Desolder pins of the switch regulator IC (IC5701) on the reverse side of SMPS P.C.B.

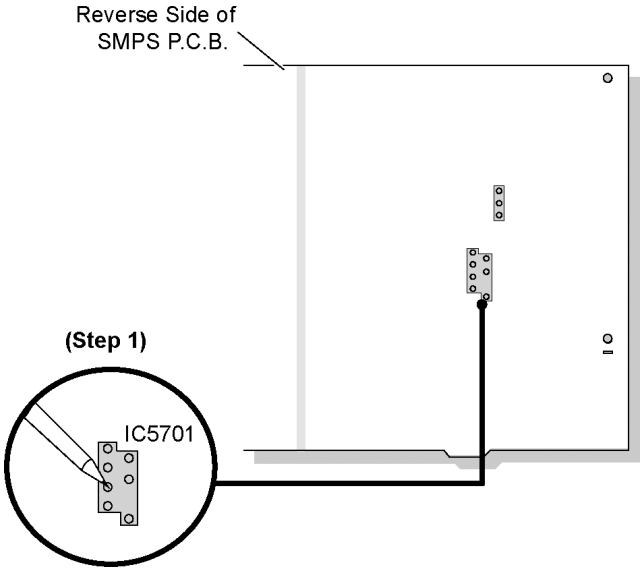


**Step 2** Remove 1 screw from the switch regulator IC (IC5701).

**Step 3** Remove the switch regulator IC (IC5701) from the heatsink unit B.

**Caution: Handle the heatsink unit B with caution due to its high temperature after prolonged use. Touching it may lead to injuries.**

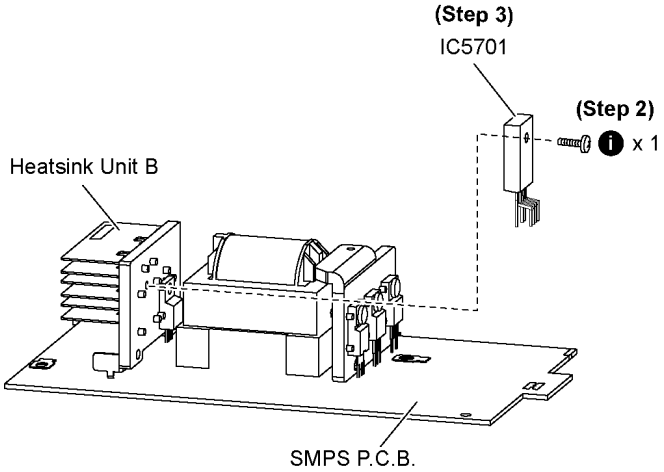


**Note:** Refer to the diagrams of SMPS P.C.B. (Item 20.7.) for location of the part.

### 7.9.1. Assembly of Switch Regulator IC (IC5701)

**Step 1** Apply grease to the heatsink unit B.

**Step 2** Fix and screw the switch regulator IC (IC5701) to the heatsink unit B.

**Special Note:** Ensure the switch regulator IC (IC5701) is tightly screwed to the heatsink unit B.

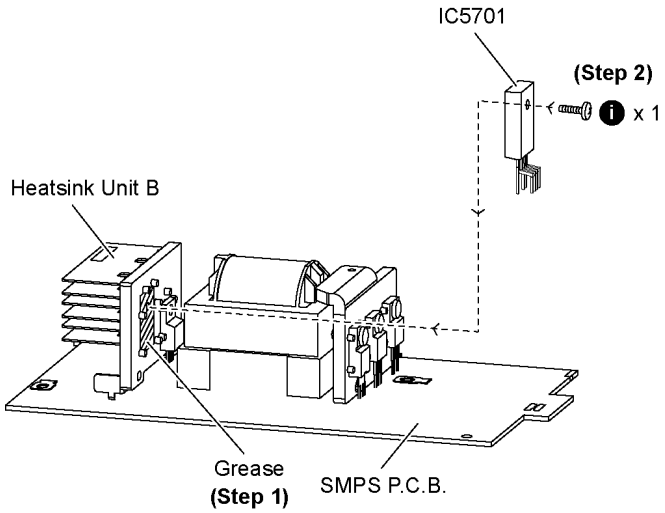


**Step 3** Solder pins of the switch regulator IC (IC5701) on the reverse side of SMPS P.C.B.

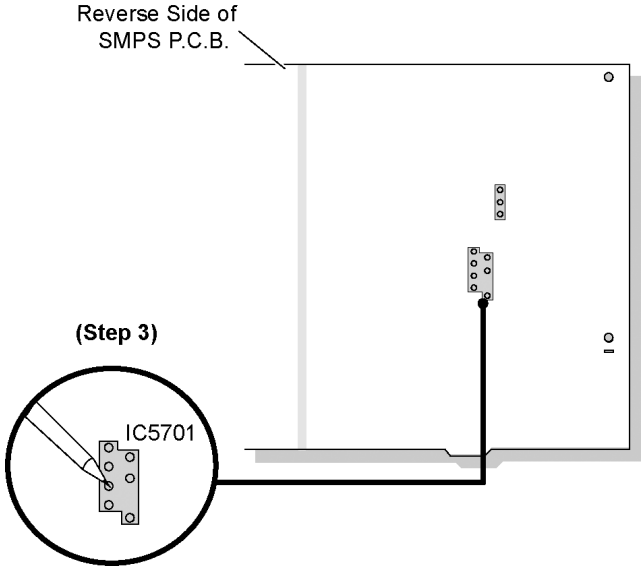


**Special Note:** Ensure pins of the switch regulator IC (IC5701) are properly seated and soldered on SMPS P.C.B.

## 7.10. Replacement of Switch Regulator Diode (D5702)

- Follow (Step 1) to (Step 4) of Item 7.3.
- Follow (Step 1) to (Step 3) of Item 7.5.
- Follow (Step 1) to (Step 10) of Item 7.6.
- Follow (Step 1) to (Step 6) of Item 7.8.
- Follow (Step 9) to (Step 11) of Item 7.8.

**Step 1** Desolder pins of the switch regulator diode (D5702) on the reverse side of SMPS P.C.B.

**Step 2** Desolder pins of the heatsink unit B.

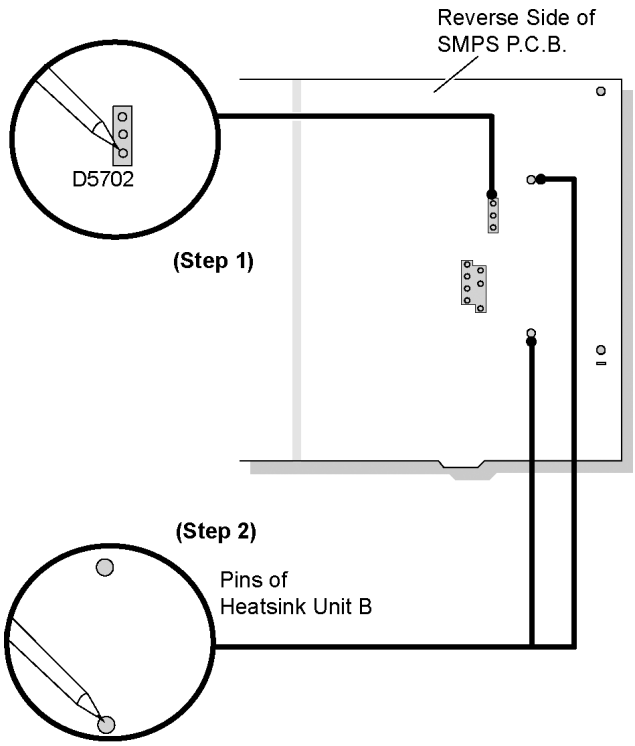


**Step 3** Remove 1 screw from the switch regulator IC (IC5701).

**Step 4** Remove the heatsink unit B in the direction of arrows.

**Step 5** Remove 1 screw from the switch regulator diode. (D5702).

**Step 6** Remove the switch regulator diode (D5702) from the heatsink unit B.

**Caution: Handle the heatsink unit B with caution due to its high temperature after prolonged use. Touching it may lead to injuries.**

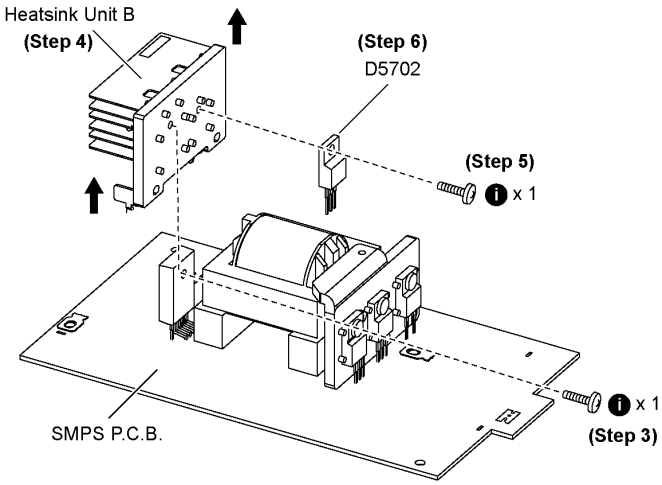


**Note:** Refer to the diagrams of SMPS P.C.B. (Item 20.7.) for location of the part.

## 7.10.1. Assembly of Switch Regulator Diode (D5702)

**Step 1** Apply grease to the heatsink unit B.

**Step 2** Fix and screw the switch regulator diode (D5702) to the heatsink unit B.

**Special Note:** Ensure the switch regulator diode (D5702) is tightly screwed to the heatsink unit B.

**Step 3** Fix the heatsink unit B on SMPS P.C.B. in the direction of arrows.

**Step 4** Fix and screw the switch regulator IC (IC5701) to the heatsink unit B

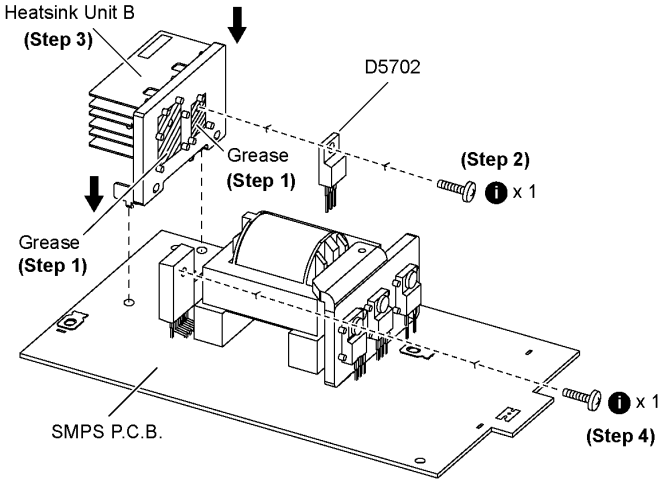


**Special Note:** Ensure the heatsink unit B is properly seated on SMPS P.C.B.

**Step 5** Solder pins of the switch regulator diode (D5702) on the reverse side of SMPS P.C.B.

**Step 6** Solder pins of the heatsink unit B on the reverse side of SMPS P.C.B.

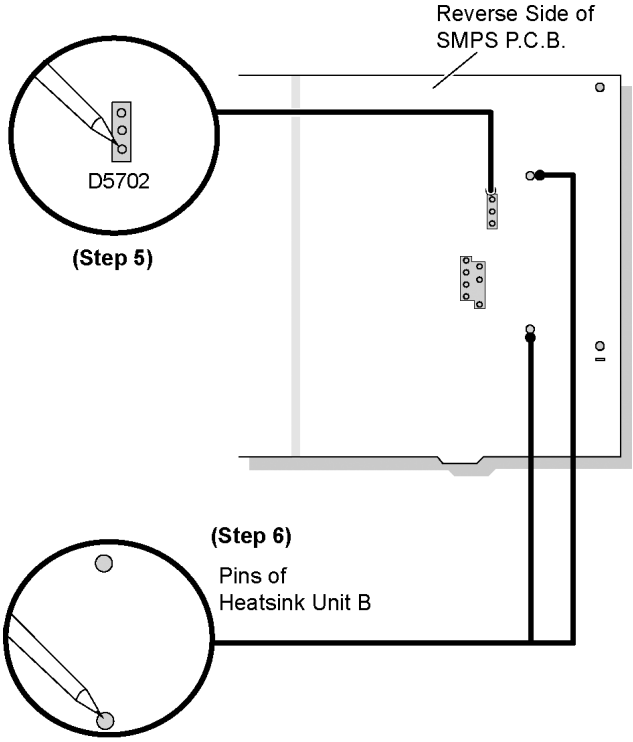


**Special Note:** Ensure pins of the switch regulator diode (D5702) are properly seated and soldered on SMPS P.C.B.

## 7.11. Replacement of Regulator Diode (D5801)

- Follow (Step 1) to (Step 4) of Item 7.3.
- Follow (Step 1) to (Step 3) of Item 7.5.
- Follow (Step 1) to (Step 10) of Item 7.6.
- Follow (Step 1) to (Step 6) of Item 7.8.
- Follow (Step 9) to (Step 11) of Item 7.8.

**Step 1** Desolder pins of the regulator diode (D5801) on the reverse side of SMPS P.C.B.

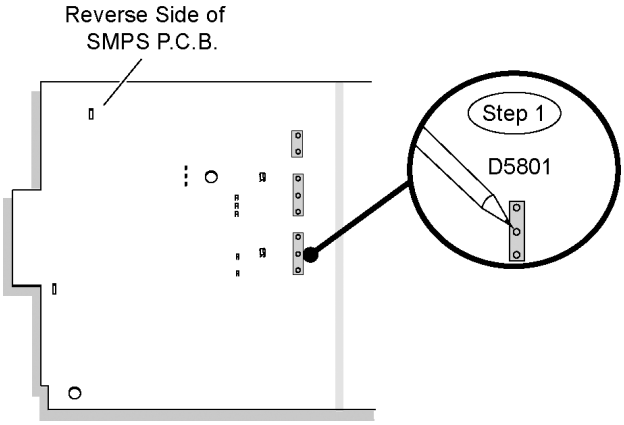


**Step 2** Remove 1 screw from the regulator diode (D5801).

**Step 3** Remove the regulator diode (D5801) from the heatsink unit C.

**Caution: Handle the heatsink unit C with caution due to its high temperature after prolonged use. Touching it may lead to injuries.**

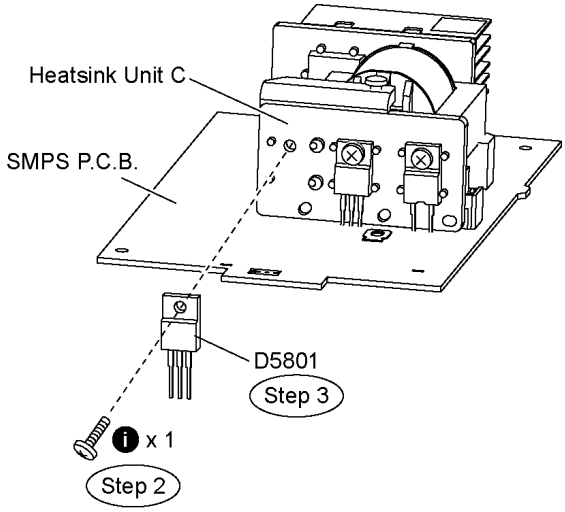


**Note:** Refer to the diagrams of SMPS P.C.B. (Item 20.7.) for location of the part.

### 7.11.1. Assembly of Regulator Diode (D5801)

**Step 1** Apply grease to the heatsink unit C.

**Step 2** Fix and screw the regulator diode (D5801) to the heatsink unit C.

**Special Note:** Ensure the regulator diode (D5801) is tightly screwed to the heatsink unit C.

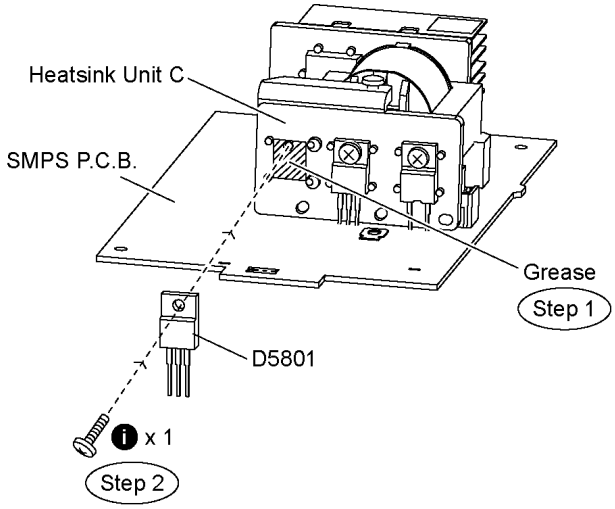


**Step 3** Solder pins of the regulator diode (D5801) on the reverse side of SMPS P.C.B.

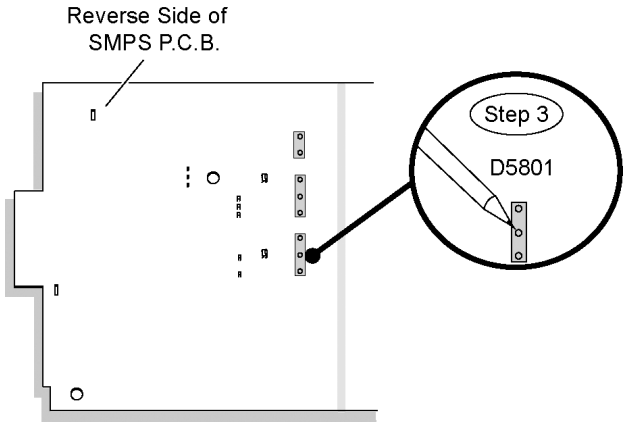


**Special Note:** Ensure pins of the regulator diode (D5801) are properly seated and soldered on SMPS P.C.B.

## 7.12. Replacement of Regulator Diode (D5802)

- Follow (Step 1) to (Step 4) of Item 7.3.
- Follow (Step 1) to (Step 3) of Item 7.5.
- Follow (Step 1) to (Step 10) of Item 7.6.
- Follow (Step 1) to (Step 6) of Item 7.8.
- Follow (Step 9) to (Step 11) of Item 7.8.

**Step 1** Desolder pins of the regulator diode (D5802) on the reverse side of SMPS P.C.B.

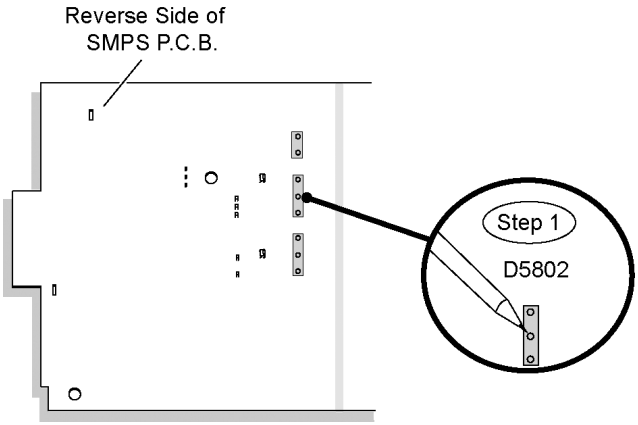


**Step 2** Remove 1 screw from the regulator diode (D5802).

**Step 3** Remove the regulator diode (D5802) from the heatsink unit C.

**Caution: Handle the heatsink unit C with caution due to its high temperature after prolonged use. Touching it may lead to injuries.**

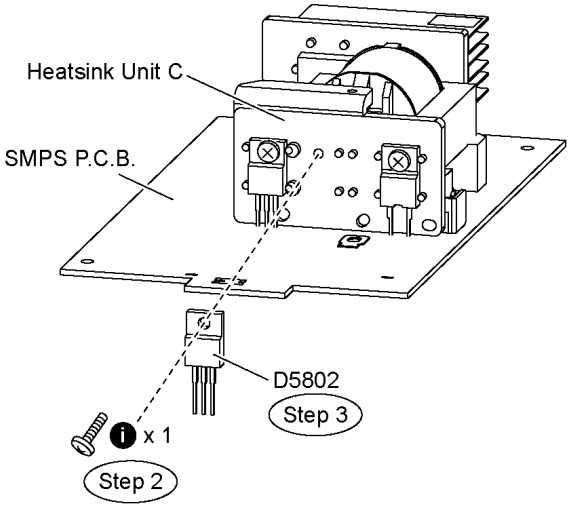


**Note:** Refer to the diagrams of SMPS P.C.B. (Item 20.7) for location of the part.

### 7.12.1. Assembly of Regulator Diode (D5802)

**Step 1** Apply grease to the heatsink unit C.

**Step 2** Fix and screw the regulator diode (D5802) to the heatsink unit C.

**Special Note:** Ensure the regulator diode (D5802) is tightly screwed to the heatsink unit C.

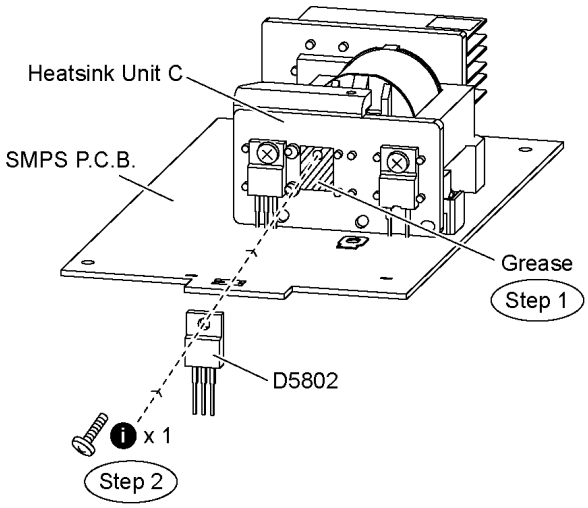


**Step 3** Solder pins of the regulator diode (D5802) on the reverse side of SMPS P.C.B.

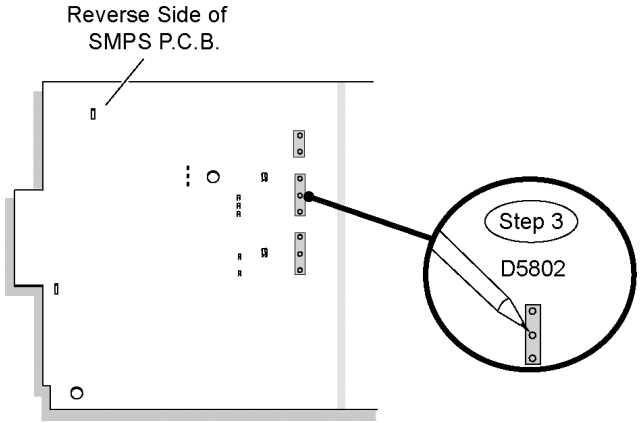


**Special Note:** Ensure pins of the regulator diode (D5802) are properly seated and soldered on SMPS P.C.B.

## 7.13. Replacement of Regulator Diode (D5803)

- Follow (Step 1) to (Step 4) of Item 7.3.
- Follow (Step 1) to (Step 3) of Item 7.5.
- Follow (Step 1) to (Step 10) of Item 7.6.
- Follow (Step 1) to (Step 6) of Item 7.8.
- Follow (Step 9) to (Step 11) of Item 7.8.

**Step 1** Desolder pins of the regulator diode (D5803) on the reverse side of SMPS P.C.B.

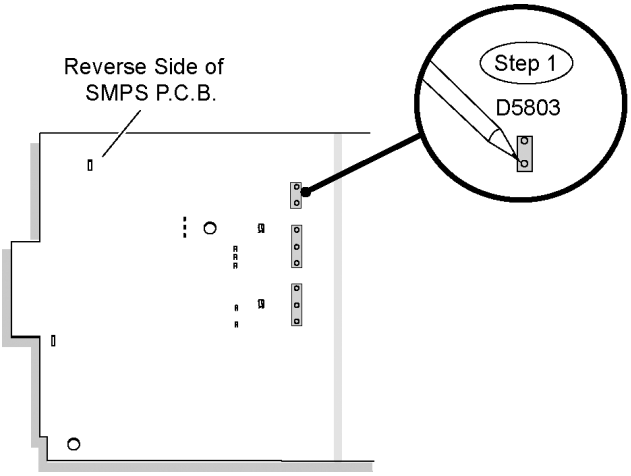


**Step 2** Remove 1 screw from the regulator diode (D5803).

**Step 3** Remove the regulator diode (D5803) from the heatsink unit C.

**Caution: Handle the heatsink unit C with caution due to its high temperature after prolonged use. Touching it may lead to injuries.**

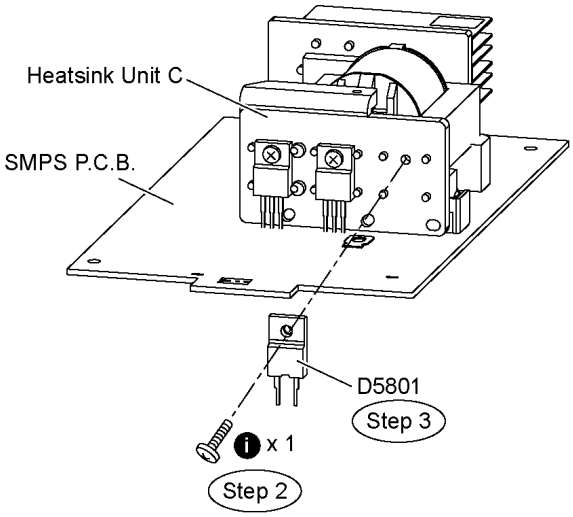


**Note:** Refer to the diagrams of SMPS P.C.B. (Item 20.7) for location of the part.

### 7.13.1. Assembly of Regulator Diode (D5803)

**Step 1** Apply grease to the heatsink unit C.

**Step 2** Fix and screw the regulator diode (D5803) to the heatsink unit C.

**Special Note:** Ensure the regulator diode (D5803) is tightly screwed to the heatsink unit C.

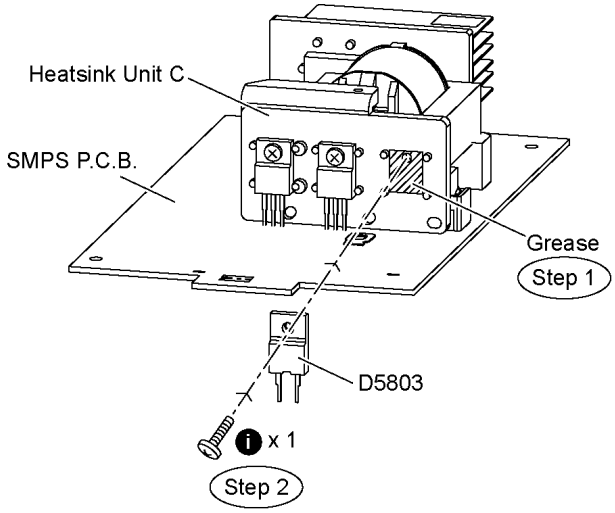


**Step 3** Solder pins of the regulator diode (D5803) on the reverse side of SMPS P.C.B.

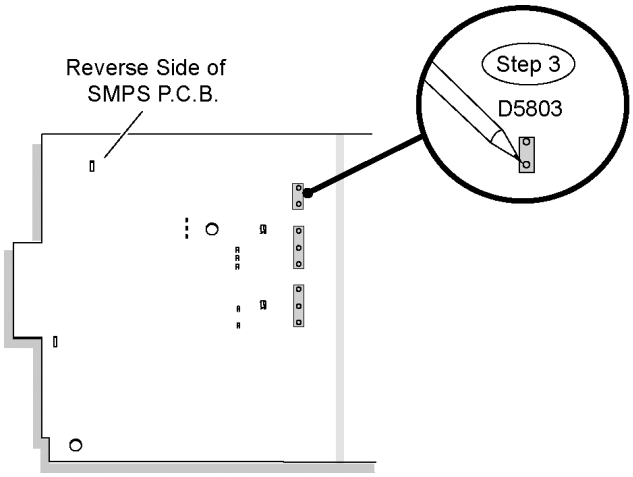


**Special Note:** Ensure pins of the regulator diode (D5803) are properly seated and soldered on SMPS P.C.B.

## 7.14. Disassembly and checking of D-Amp A (4CH) P.C.B.

- Follow (Step 1) to (Step 4) of Item 7.3.
- Follow (Step 1) to (Step 3) of Item 7.5.
- Follow (Step 1) to (Step 10) of Item 7.6.
- Follow (Step 1) to (Step 10) of Item 7.8.

**Step 1** Slightly detach the tab of rear panel as diagram shown.

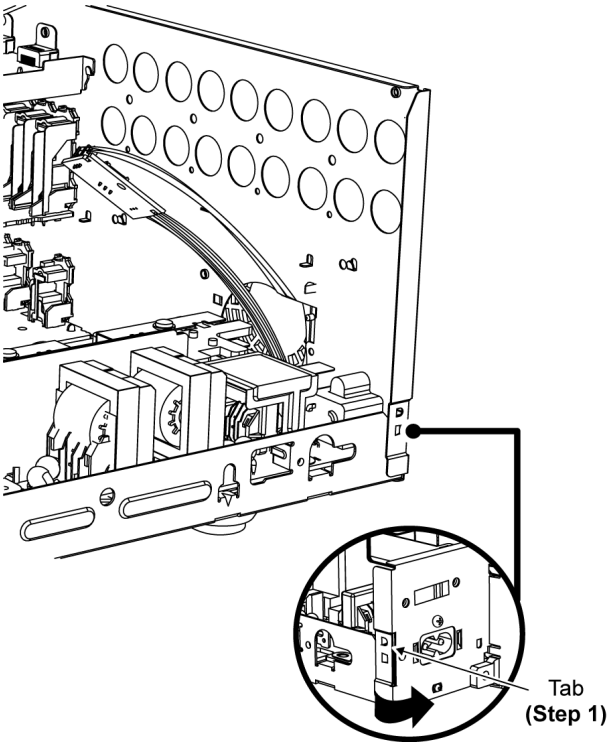


**Step 2** Remove 2 screws on D-Amp (4CH) P.C.B..

**Step 3** Attach original cable with extension cable REXX0651 (8P cable from H5801 to CN5500).

**Step 4** Connect extension cable REEX0815 (17P cable from CN2802 to CN5050).

**Step 5** Remove the D-Amp A (4CH) P.C.B. as arrow shown.

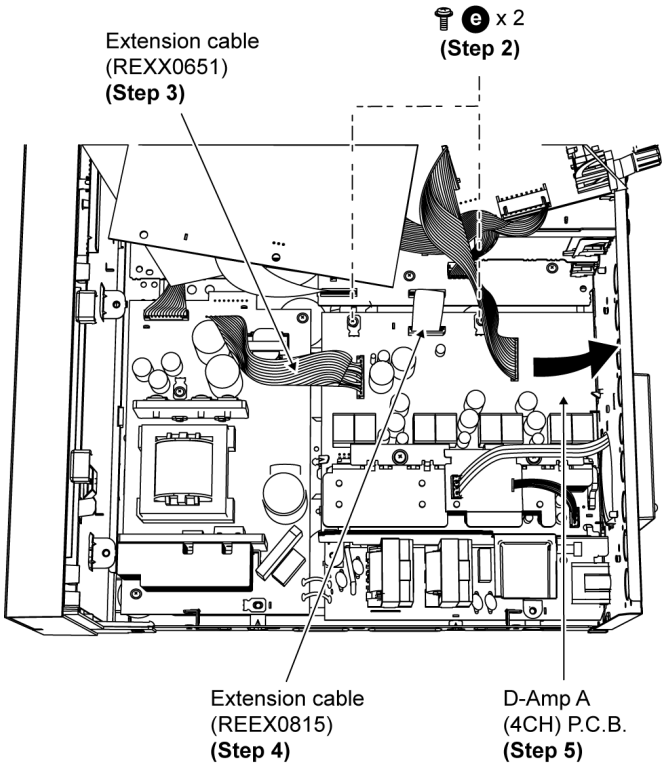


**Step 6** Position D-Amp A (4CH) P.C.B. according to the diagram shown.

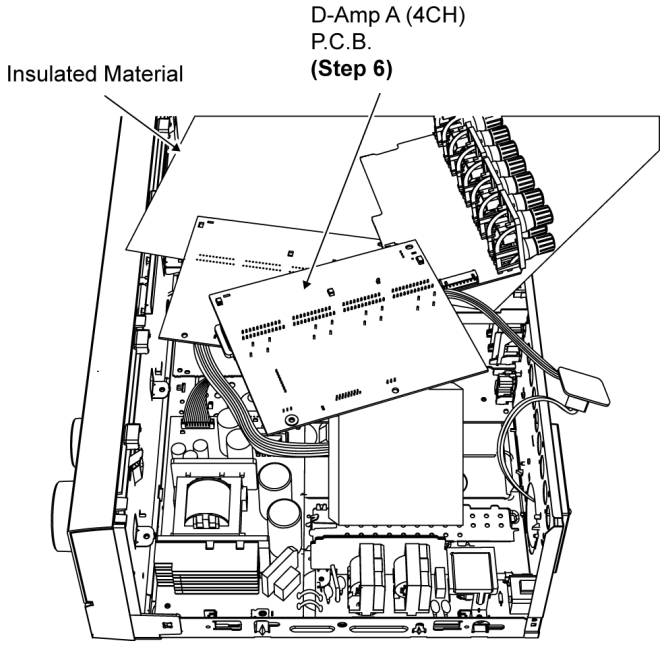


**Caution: Lay an Insulated material to support the D-Amp A (4CH) P.C.B.**

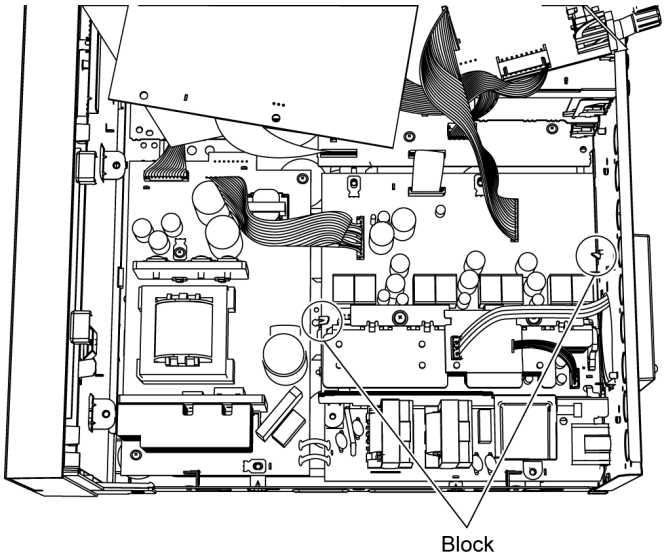


**Caution: During reassembling procedures, ensure the SMPS and AC Inlet P.C.B. is seated properly under the blocks.**

## 7.15. Replacement of Digital Amp IC (IC5000) of D-Amp A (4CH) P.C.B.

- Follow (Step 1) to (Step 4) of Item 7.3.
- Follow (Step 1) to (Step 3) of Item 7.5.
- Follow (Step 1) to (Step 10) of Item 7.6.
- Follow (Step 1) to (Step 10) of Item 7.8.

**Step 1** Detach 8P cable at the connector (CN5500) on D-Amp A (4CH) P.C.B.

**Step 2** Detach 17P FFC cable at the connector (CN5050) on D-Amp (4CH) P.C.B.

**Step 3** Twist wire clamper to detach 3P cable at the connector

(CN5501) on D-Amp A (4CH) P.C.B.

**Step 4** Detach 12P cable at the connector (JW4602) on Speaker P.C.B.

**Step 5** Remove the D-Amp A (4CH) P.C.B. as arrow shown.

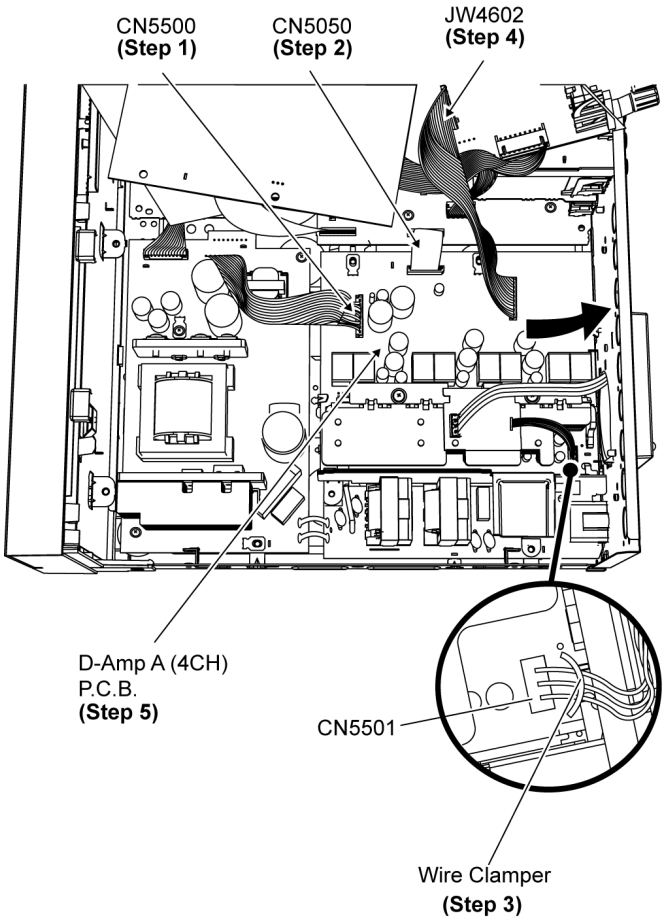


**Step 6** Desolder pins of the digital amp IC (IC5000) on the back side of D-Amp P.C.B.

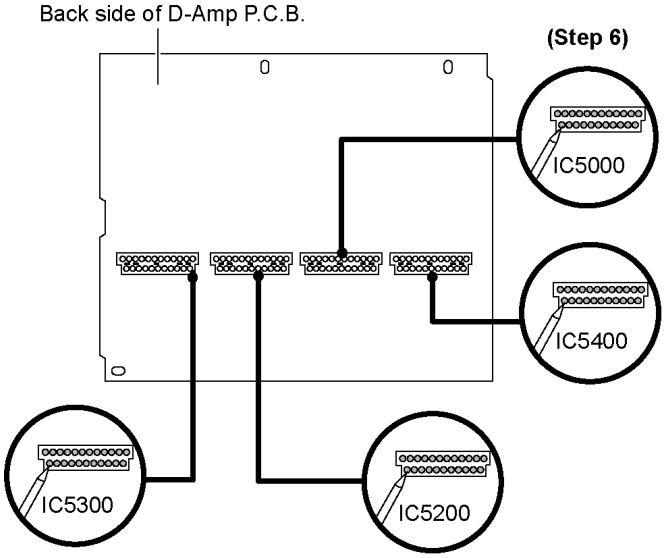


**Step 7** Remove 1 screw from the top of the heatsink unit A.

**Step 8** Remove the TR spring in the direction of the arrow.

**Step 9** Remove the digital amp IC (IC5000) from the heatsink unit A.

**Caution:** Handle the heatsink unit A with caution due to its high temperature after prolonged use. Touching it may lead to injuries.

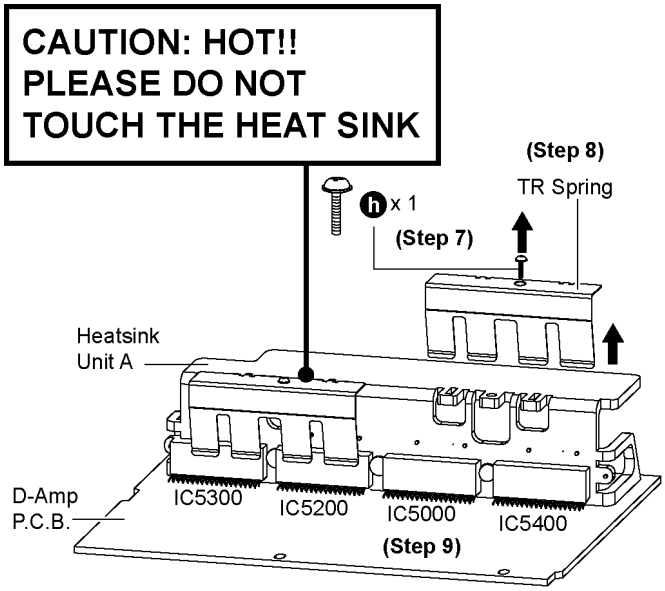


**Special Note:** For replacement of IC5200, IC5300 & IC5400, repeat the (Step 1) to (Step 8). Refer to the diagrams of D-Amp P.C.B. (Item 14.7) for location of the parts.

## 7.16. Disassembly and checking of HDMI side (A) and side (B)

- Follow (Step 1) to (Step 4) of Item 7.3.

- Side (A).

**Step 1** Proceed to check side A of HDMI P.C.B.

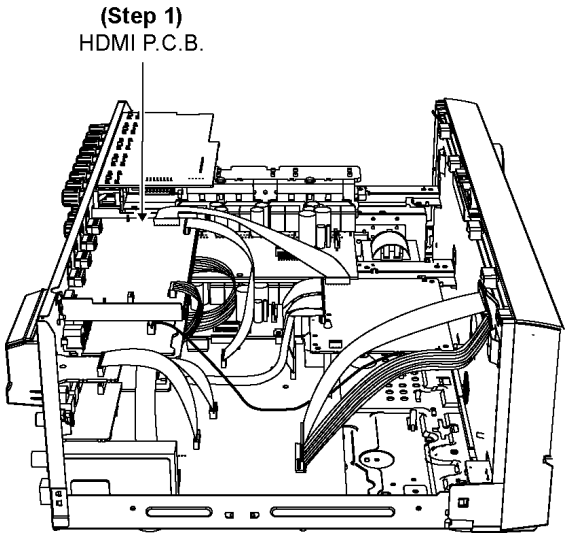


**Step 2** Remove 6 screws.

**Step 3** Flip HDMI P.C.B. as arrow shown.

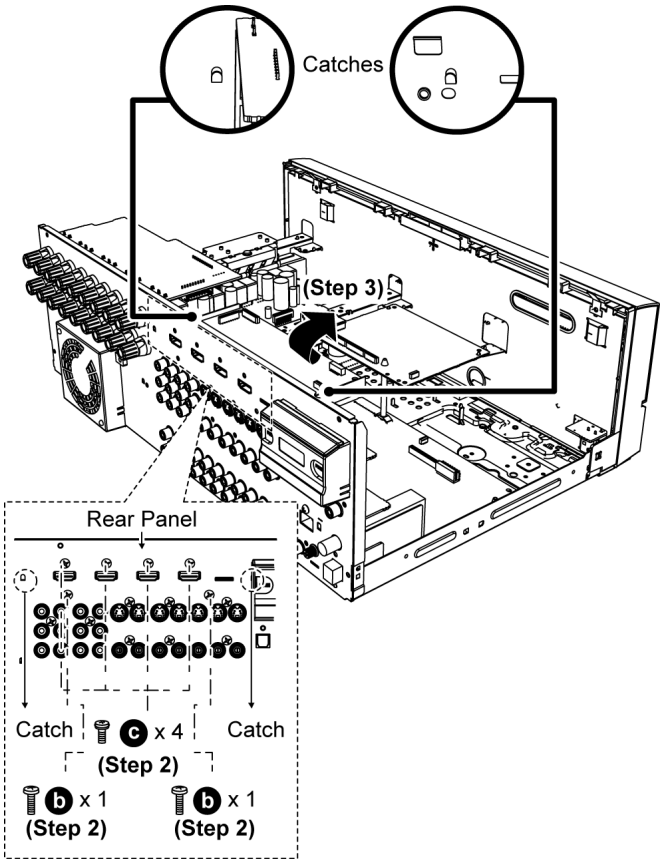


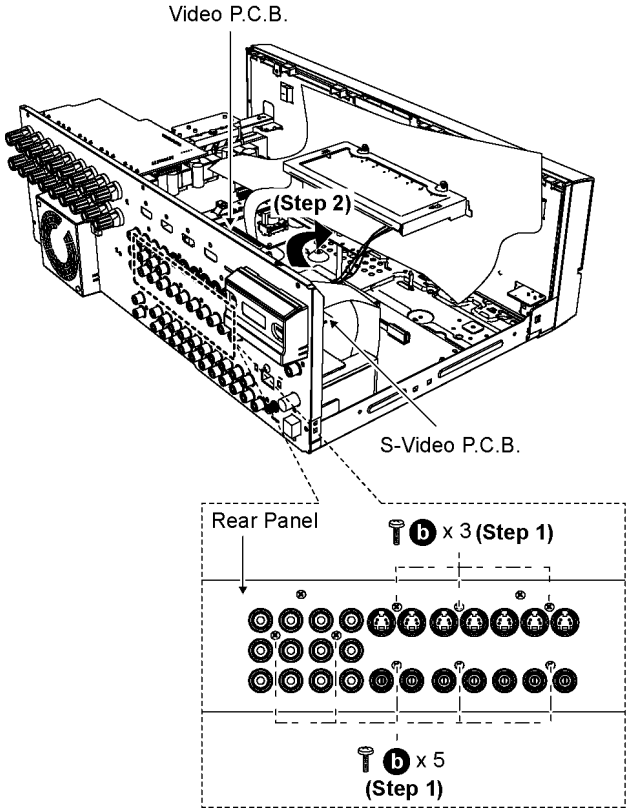


**Step 3** Proceed to check S-Video and Video P.C.B..

**Step 4** Proceed to check side (B) of HDMI P.C.B.

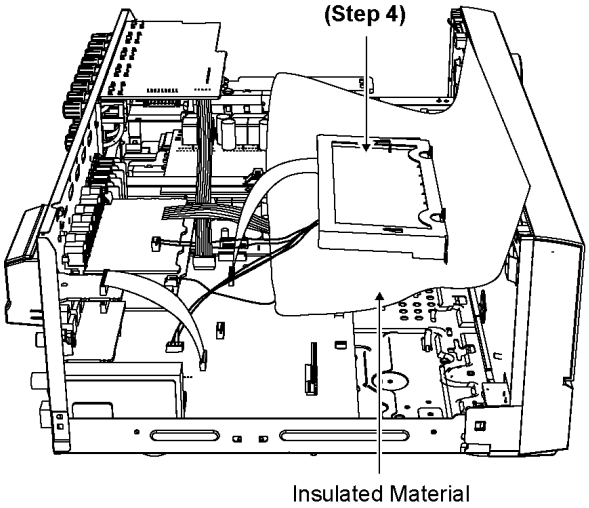


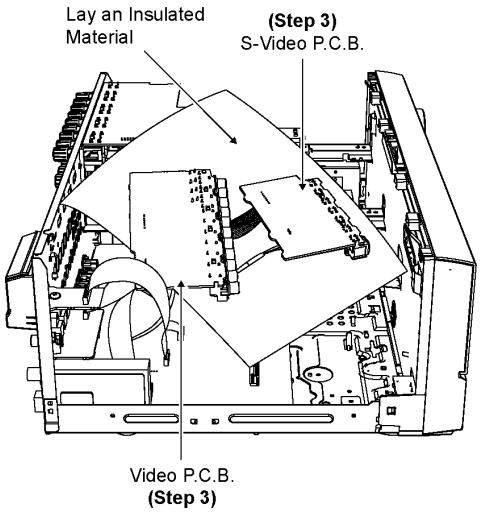


## 7.17. Disassembly and Checking of S-Video & Video P.C.B.

- Follow (Step 1) to (Step 4) of Item 7.3.
- Follow (Step 1) to (Step 3) of Item 7.16.

**Step 1**Remove 8 screws.

**Step 2**Flip S-video & Video P.C.B. as arrow shown.

## 7.18. Disassembly and checking of Wireless Adapter, Digital & D-Port P.C.B.

- Follow (Step 1) to (Step 4) of Item 7.3.

**Step 1** Push the dents on both sides of transmitter chassis cover.

**Step 2** Remove the transmitter chassis cover as arrow shown.

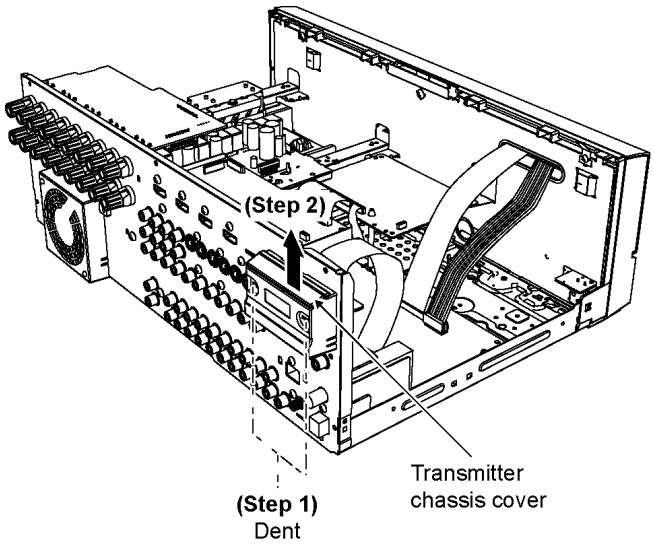


**Step 3** Remove 7 screws on the rear panel.

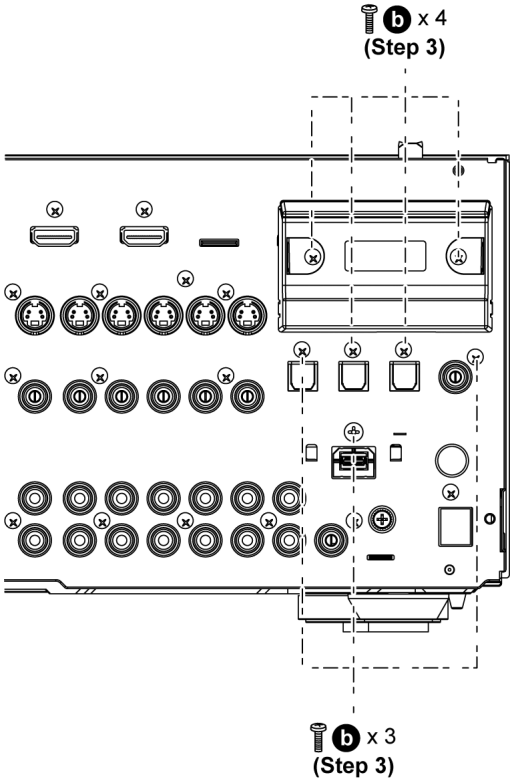


**Step 4** Release 2 catches at the rear panel.

**Step 5** Remove the transmitter chassis as arrow shown.

**Step 6** Detach 22P FFC cable at the connector (CN6301) on Wireless Adapter P.C.B.

**Step 7** Remove 1 screw at the Wireless Adapter P.C.B..

**Step 8** Remove Wireless Adapter P.C.B. as arrow shown.

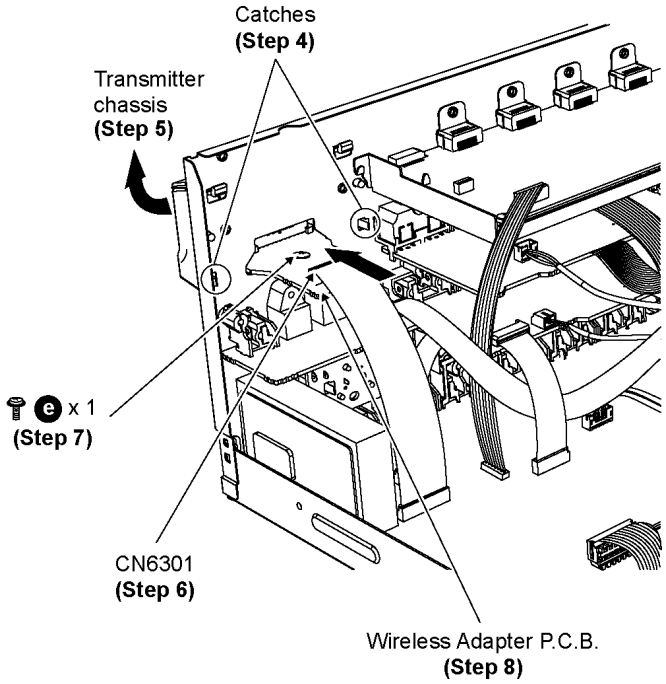


**Step 9** Detach 11P FFC cable at the connector (PB4401) on Digital P.C.B.

**Step 10** Remove Digital P.C.B. as arrow shown.

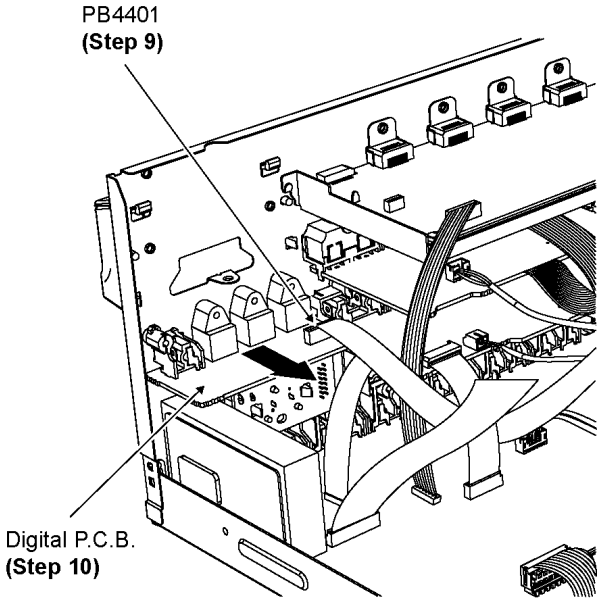


**Step 11** Remove D-Port P.C.B. as arrow shown.

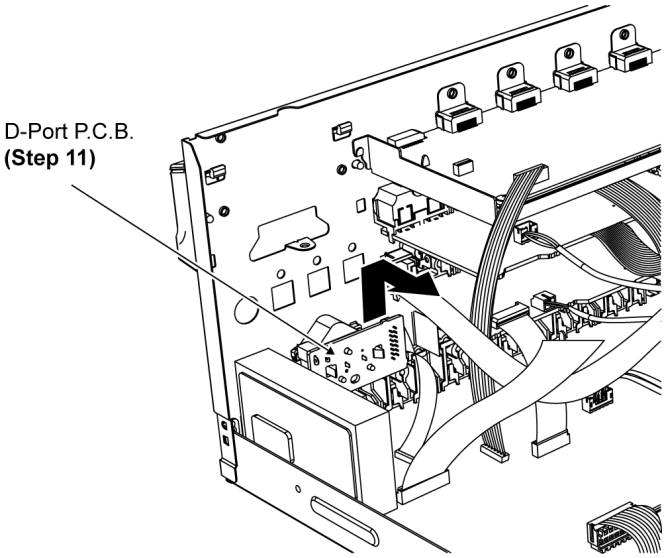


**Step 12** Position D-Port P.C.B. as Diagram shown.

**Step 13** Connect 22P FFC Cable at the connector (CN6301) on Wireless Adapter P.C.B..

**Step 14** Connect 11P FFC cable at the connector (PB4401) on Digital P.C.B.

**Step 15** Proceed to check D-Port, Wireless Adapter and Digital P.C.B.

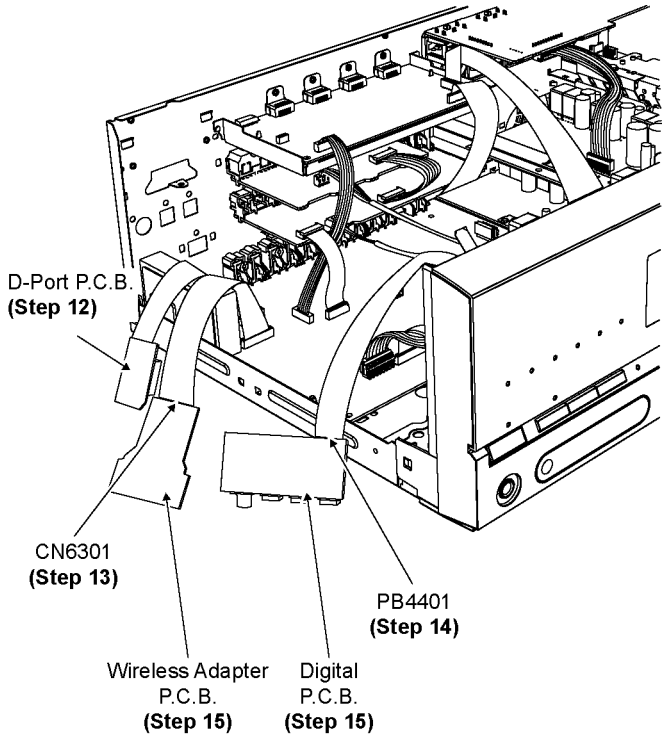


## 7.19. Disassembly and Checking of Main (Side A/B) P.C.B.

- Follow (Step 1) to (Step 4) of Item 7.3.
- Follow (Step 1) to (Step 3) of Item 7.5.

- Disassembly and Checking Side A.

**Step 1** Remove 9 screws.

**Step 2** Release 2 tabs.

**Step 3** Remove rear panel as arrow shown.

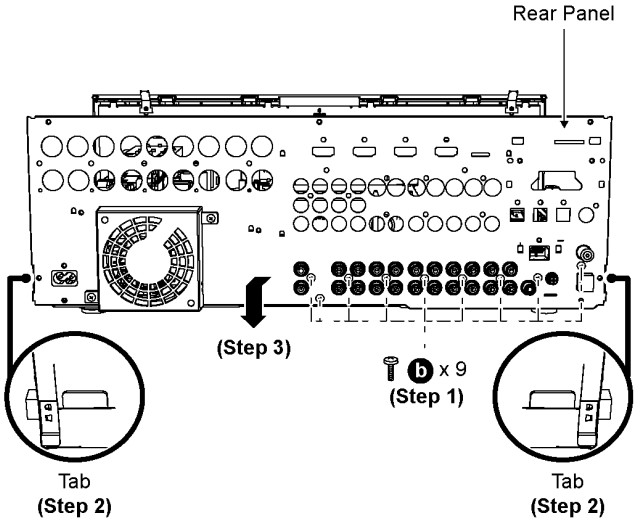


**Step 4** Position the P.C.B as diagram show.

**Step 5** Connect Wireless Adapter, Digital & D-Port P.C.B..

**Step 6** Proceed to check Side A of Main P.C.B.

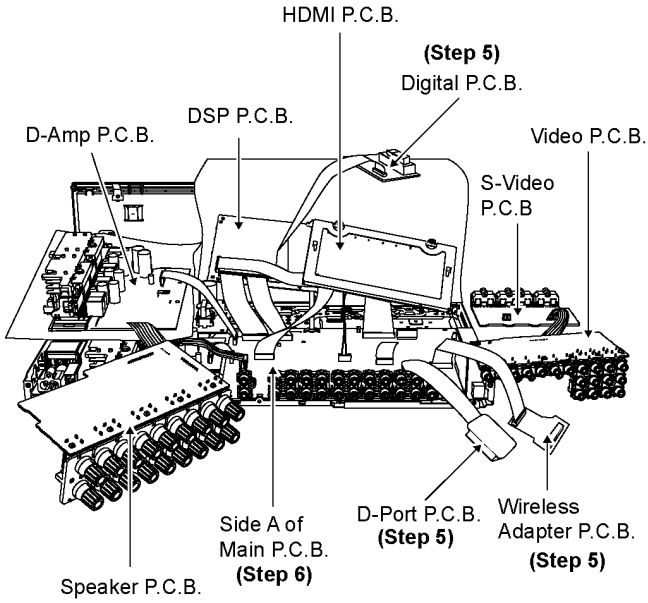


- Disassembly and Checking Side B.

**Step 7** Remove 4 screws.

**Step 8** Remove Main P.C.B. support.

**Step 9** Flip the Main P.C.B. as arrow shown.

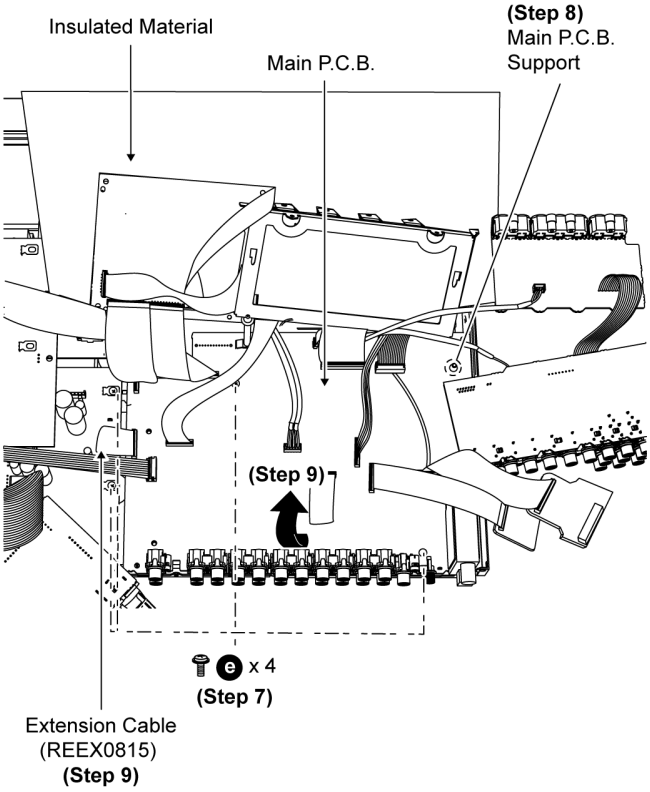


**Step 10** Proceed to check Side B of Main P.C.B.

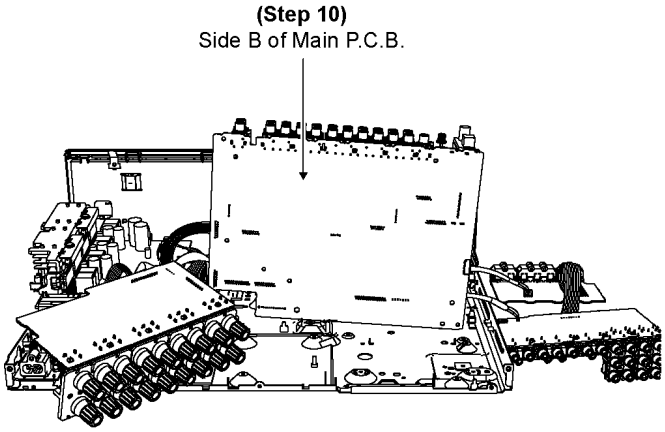


## 7.20. Disassembly of Front Panel

- Follow (Step 1) to (Step 4) of Item 7.3.

**Step 1** Remove 2 screws.

**Step 2** Release 1 catch.

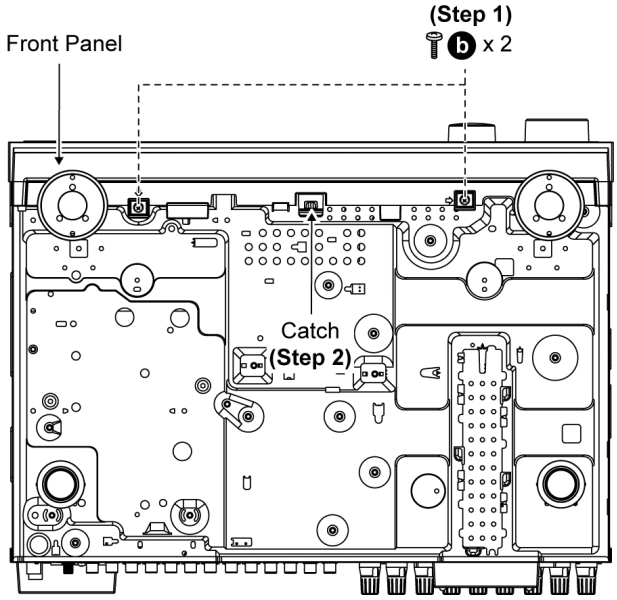


**Step 3** Detach 30P FFC cable at the connector (PB501) on Main P.C.B..

**Step 4** Detach 7P cable at the connector (PB502) on Main P.C.B.

**Step 5** Detach 5P cable at the connector (PB1002) on Main P.C.B.

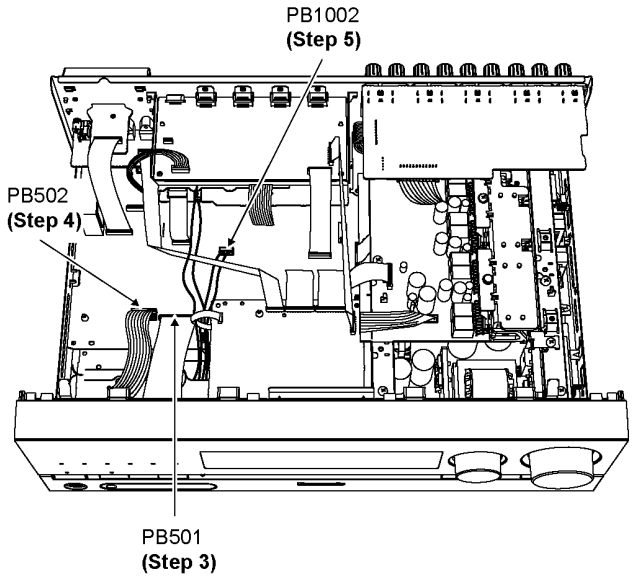


**Step 6** Detach 3P cable at the connector (PA1051) on Main P.C.B.

**Step 7** Detach 2P cable at the connector (PA1002) on Main P.C.B.

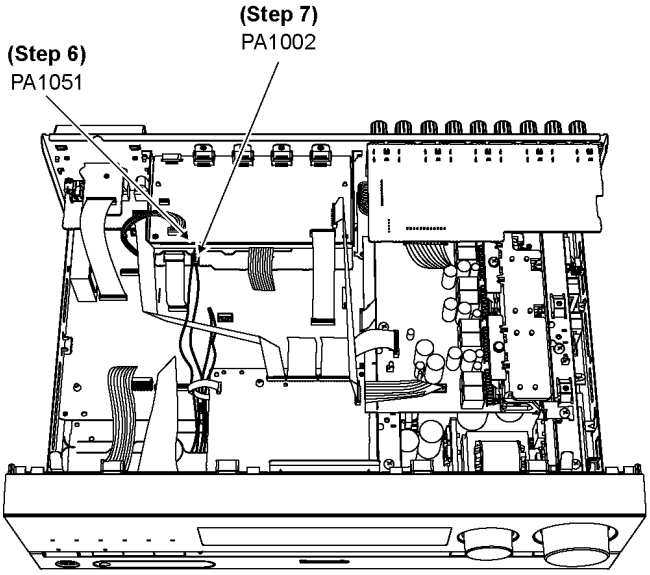


**Step 8** Remove 4 screws.

**Step 9** Slightly move up 2 support bars and DSP P.C.B. to release the catches.

**Step 10** Release 2 tabs.

**Step 11** Remove front panel as arrow shown.

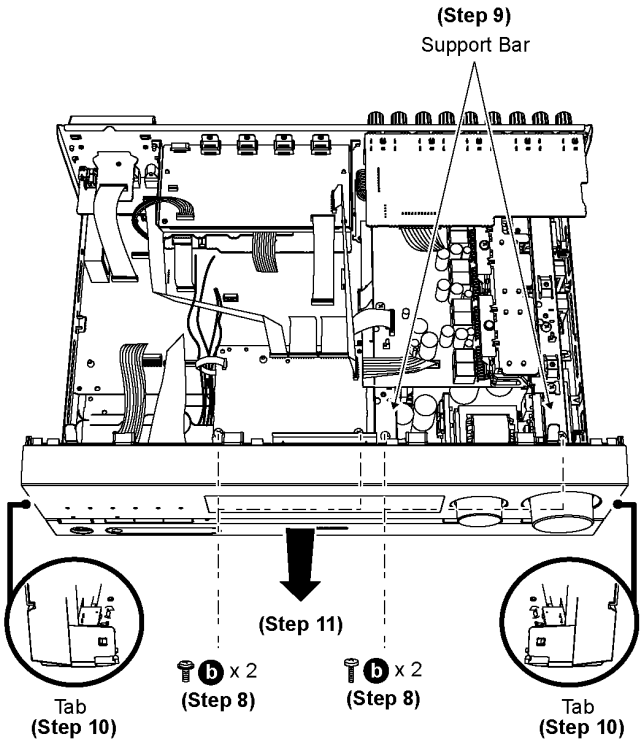


## 7.21. Disassembly and checking of Panel, Headphone, Volume P.C.B.

- Follow (Step 1) to (Step 4) of Item 7.3.
- Follow (Step 1) to (Step 11) of Item 7.15.

**Step 1** Remove Selector and Volume Knob.

**Step 2** Remove 2 M9 nuts (i), (ii) by using plyer as diagram shown.

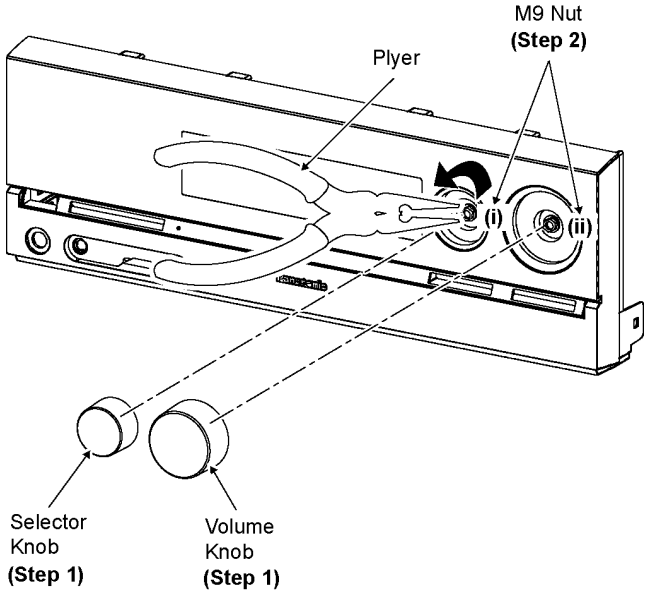


**Step 3** Remove 6 screws at front panel shield plate.

**Step 4** Remove the front panel shield plate.

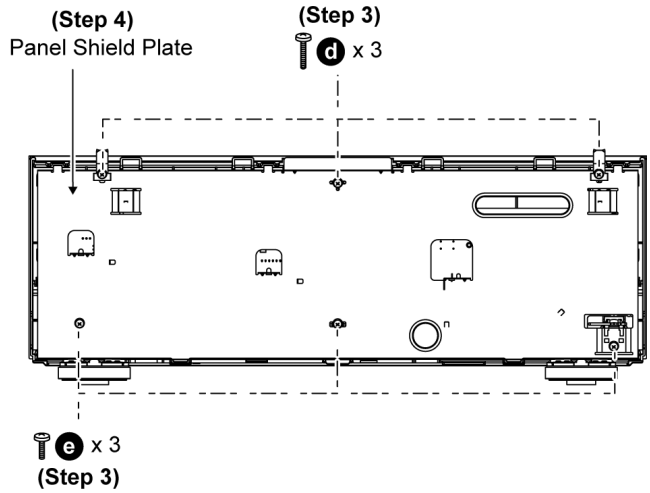


**Step 5** Remove 9 screws.

**Step 6** Remove 2 VCR earth angles.

**Step 7** Remove Panel, Volume, Headphone P.C.B.

**Caution :** Keep the Panel Earth Plate in safe place. Avoid denting it. Place it back during assembling.

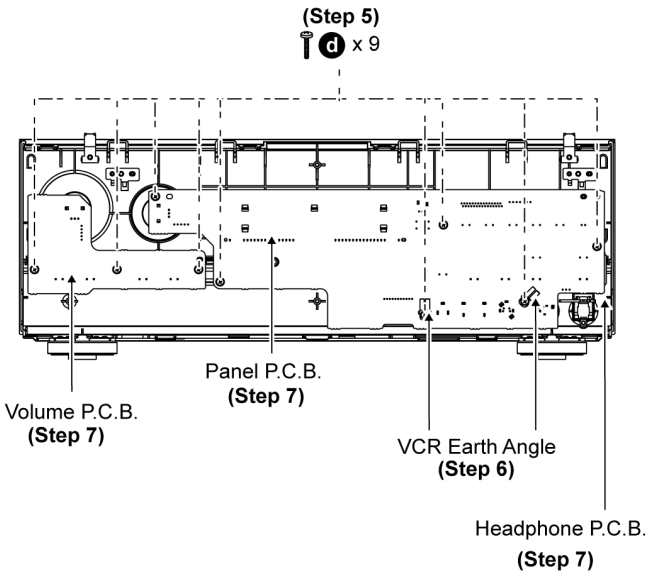


**Caution:** Keep the VCR Earth Angle in safe place. Avoid denting it. Place it back during assembling.

**Step 8** Connect Panel, Volume, Headphone P.C.B.

**Step 9** Proceed to check Panel, Volume, Headphone P.C.B.

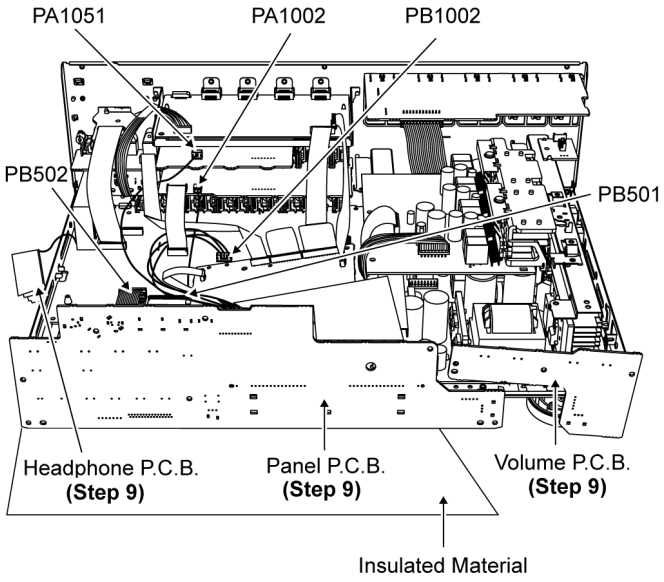

# 8 Voltage and Waveform Chart

## 8.1. HDMI P.C.B.

| REF NO. | IC2001 | | | | | | | | | | | | | | | | | | | |
|---|---|---|---|---|---|---|---|---|---|---|---|---|---|---|---|---|---|---|---|---|
| MODE | 1 | 2 | 3 | 4 | 5 | | | | | | | | | | | | | | | |
| CD PLAY | 3.3 | 3.3 | 0 | - | 1.8 | | | | | | | | | | | | | | | |
| STANDBY | 3.3 | 3.3 | 0 | - | 1.8 | | | | | | | | | | | | | | | |
| REF NO. | IC2002 | | | | | | | | | | | | | | | | | | | |
| MODE | 1 | 2 | 3 | 4 | 5 | 6 | 7 | 8 | 9 | 10 | 11 | 12 | 13 | 14 | 15 | 16 | 17 | 18 | 19 | 20 |
| CD PLAY | 0 | 0 | 0 | 2 | 0 | 0 | 0 | 0 | 0 | 0 | 0 | 3.3 | 1.7 | 0 | 1.5 | 3.3 | 3.3 | 0 | 3.3 | 3.3 |
| STANDBY | 0 | 0 | 0 | 2 | 0 | 0 | 0 | 0 | 0 | 0 | 0 | 3.3 | 1.7 | 0 | 1.5 | 3.3 | 3.3 | 0 | 3.3 | 3.3 |
| REF NO. | IC2002 | | | | | | | | | | | | | | | | | | | |
| MODE | 21 | 22 | 23 | 24 | 25 | 26 | 27 | 28 | 29 | 30 | 31 | 32 | 33 | 34 | 35 | 36 | 37 | 38 | 39 | 40 |
| CD PLAY | 3.3 | 3.3 | 0 | 3.3 | 0 | 3.3 | 3.3 | 2.9 | 3.1 | 0.6 | 0.1 | 0.1 | 0 | 0 | 3.3 | 3.3 | 0 | 3.3 | 3.3 | 0 |
| STANDBY | 3.3 | 3.3 | 0 | 3.3 | 0 | 3.3 | 3.3 | 2.9 | 3.1 | 0.6 | 0.1 | 0.1 | 0 | 0 | 3.3 | 3.3 | 0 | 3.3 | 3.3 | 0 |
| REF NO. | IC2002 | | | | | | | | | | | | | | | | | | | |
| MODE | 41 | 42 | 43 | 44 | 45 | 46 | 47 | 48 | 49 | 50 | 51 | 52 | 53 | 54 | 55 | 56 | 57 | 58 | 59 | 60 |
| CD PLAY | 0 | 3.3 | 0 | 3.3 | 0 | 0 | 0 | 0 | 0 | 3.3 | 0 | 0 | 3.3 | 0 | 0 | 0 | 0 | 0 | 0 | 0 |
| STANDBY | 0 | 3.3 | 0 | 3.3 | 0 | 0 | 0 | 0 | 0 | 3.3 | 0 | 0 | 3.3 | 0 | 0 | 0 | 0 | 0 | 0 | 0 |
| REF NO. | IC2002 | | | | | | | | | | | | | | | | | | | |
| MODE | 61 | 62 | 63 | 64 | 65 | 66 | 67 | 68 | 69 | 70 | 71 | 72 | 73 | 74 | 75 | 76 | 77 | 78 | 79 | 80 |
| CD PLAY | 0 | 3.3 | 0 | 0 | 0 | 0 | 0 | 3.2 | 3.3 | 3.3 | 0 | 0 | 0 | 0 | 0 | 3.3 | 3.3 | 3.3 | 0 | 0 |
| STANDBY | 0 | 3.3 | 0 | 0 | 0 | 0 | 0 | 3.2 | 3.3 | 3.3 | 0 | 0 | 0 | 0 | 0 | 3.3 | 3.3 | 3.3 | 0 | 0 |
| REF NO. | IC2002 | | | | | | | | | | | | | | | | | | | |
| MODE | 81 | 82 | 83 | 84 | 85 | 86 | 87 | 88 | 89 | 90 | 91 | 92 | 93 | 94 | 95 | 96 | 97 | 98 | 99 | 100 |
| CD PLAY | 0 | 0 | 0 | 0 | 0 | 0 | 0 | 0 | 0 | 0 | 0 | 0 | 0 | 1.8 | 2 | 0 | 0 | 3.3 | 3.3 | 0 |
| STANDBY | 0 | 0 | 0 | 0 | 0 | 0 | 0 | 0 | 0 | 0 | 0 | 0 | 0 | 1.8 | 2 | 0 | 0 | 3.3 | 3.3 | 0 |
| REF NO. | IC2003 | | | | | | | | | | | | | | | | | | | |
| MODE | 1 | 2 | 3 | 4 | 5 | 6 | 7 | 8 | | | | | | | | | | | | |
| CD PLAY | 0 | 0 | 3.3 | 0 | 3.3 | 3.3 | 0 | 3.3 | | | | | | | | | | | | |
| STANDBY | 0 | 0 | 3.3 | 0 | 3.3 | 3.3 | 0 | 3.3 | | | | | | | | | | | | |
| REF NO. | IC2004 | | | | | | | | | | | | | | | | | | | |
| MODE | 1 | 2 | 3 | 4 | 5 | | | | | | | | | | | | | | | |
| CD PLAY | 3.9 | 3.3 | 3.3 | - | 0 | | | | | | | | | | | | | | | |
| STANDBY | 3.9 | 3.3 | 3.3 | - | 0 | | | | | | | | | | | | | | | |
| REF NO. | IC2005 | | | | | | | | | | | | | | | | | | | |
| MODE | 1 | 2 | 3 | 4 | 5 | | | | | | | | | | | | | | | |
| CD PLAY | 3.9 | 0 | 3.9 | - | 3.3 | | | | | | | | | | | | | | | |
| STANDBY | 3.9 | 0 | 3.9 | - | 3.3 | | | | | | | | | | | | | | | |
| REF NO. | IC2006 | | | | | | | | | | | | | | | | | | | |
| MODE | 1 | 2 | 3 | 4 | 5 | 6 | 7 | 8 | 9 | 10 | 11 | 12 | 13 | 14 | 15 | 16 | 17 | 18 | 19 | 20 |
| CD PLAY | 0 | 0 | 0 | 0 | 0 | 0 | 0 | 0 | 0 | 0 | 0 | 0 | 0 | 0 | 0 | 0 | 0 | 0 | 0 | 3.3 |
| STANDBY | 0 | 0 | 0 | 0 | 0 | 0 | 0 | 0 | 0 | 0 | 0 | 0 | 0 | 0 | 0 | 0 | 0 | 0 | 0 | 3.3 |
| REF NO. | IC2006 | | | | | | | | | | | | | | | | | | | |
| MODE | 21 | 22 | 23 | 24 | 25 | 26 | 27 | 28 | 29 | 30 | 31 | 32 | 33 | 34 | 35 | 36 | 37 | 38 | 39 | 40 |
| CD PLAY | 1.2 | 1.1 | 3.3 | 1 | 1 | 0 | 1 | 1.1 | 1.8 | 0 | 0 | 0 | 1.8 | 0 | 3.3 | 0 | 1.8 | 1.1 | 1.1 | 0 |
| STANDBY | 1.2 | 1.1 | 3.3 | 1 | 1 | 0 | 1 | 1.1 | 1.8 | 0 | 0 | 0 | 1.8 | 0 | 3.3 | 0 | 1.8 | 1.1 | 1.1 | 0 |
| REF NO. | IC2006 | | | | | | | | | | | | | | | | | | | |
| MODE | 41 | 42 | 43 | 44 | 45 | 46 | 47 | 48 | 49 | 50 | 51 | 52 | 53 | 54 | 55 | 56 | 57 | 58 | 59 | 60 |
| CD PLAY | 1.1 | 1.1 | 3.3 | 1.1 | 1.1 | 0 | 1.1 | 1.1 | 1.8 | 0 | 0 | 0 | 0 | 0 | 3.3 | 0 | 1.8 | 3.3 | 3.3 | 0 |
| STANDBY | 1.1 | 1.1 | 3.3 | 1.1 | 1.1 | 0 | 1.1 | 1.1 | 1.8 | 0 | 0 | 0 | 0 | 0 | 3.3 | 0 | 1.8 | 3.3 | 3.3 | 0 |
| REF NO. | IC2006 | | | | | | | | | | | | | | | | | | | |
| MODE | 61 | 62 | 63 | 64 | 65 | 66 | 67 | 68 | 69 | 70 | 71 | 72 | 73 | 74 | 75 | 76 | 77 | 78 | 79 | 80 |
| CD PLAY | 3.3 | 3.3 | 3.3 | 3.3 | 3.3 | 0 | 3.3 | 3.3 | 1.8 | 0 | 0 | 0 | 1.8 | 0 | 0 | 3.3 | 0 | 0 | 0 | 0 |
| STANDBY | 3.3 | 3.3 | 3.3 | 3.3 | 3.3 | 0 | 3.3 | 3.3 | 1.8 | 0 | 0 | 0 | 1.8 | 0 | 0 | 3.3 | 0 | 0 | 0 | 0 |
| REF NO. | IC2101 | | | | | | | | | | | | | | | | | | | |
| MODE | 1 | 2 | 3 | 4 | 5 | 6 | 7 | 8 | 9 | 10 | 11 | 12 | 13 | 14 | 15 | 16 | 17 | 18 | 19 | 20 |
| CD PLAY | 1.1 | 0 | 0 | 0 | 0 | 0 | 0 | 0 | 0 | 0 | 0 | 1.8 | 0 | 3.3 | 0 | 0 | 0 | 0 | 0 | 0 |
| STANDBY | 1.2 | 0 | 0 | 0 | 0 | 0 | 0 | 0 | 0 | 0 | 0 | 1.8 | 0 | 3.3 | 0 | 0 | 0 | 0 | 0 | 0 |
| REF NO. | IC2101 | | | | | | | | | | | | | | | | | | | |
| MODE | 21 | 22 | 23 | 24 | 25 | 26 | 27 | 28 | 29 | 30 | 31 | 32 | 33 | 34 | 35 | 36 | 37 | 38 | 39 | 40 |
| CD PLAY | 0 | 0 | 0 | 3.3 | 3.3 | 0 | 1.8 | 1.8 | 0 | 0.1 | 0.1 | 1.8 | 1.1 | 1.1 | 0 | 1.1 | 1.1 | 1.8 | 1.1 | 1.1 |
| STANDBY | 0 | 0 | 0 | 3.3 | 3.3 | 0 | 1.8 | 1.8 | 0 | 0.1 | 0.1 | 1.8 | 1.1 | 1.1 | 0 | 1.1 | 1.1 | 1.8 | 1.1 | 1.1 |
| REF NO. | IC2101 | | | | | | | | | | | | | | | | | | | |
| MODE | 41 | 42 | 43 | 44 | 45 | 46 | 47 | 48 | 49 | 50 | 51 | 52 | 53 | 54 | 55 | 56 | 57 | 58 | 59 | 60 |
| CD PLAY | 0 | 1.8 | 0 | 3.3 | 5 | 5 | 5 | 3.3 | 3.3 | 0.3 | 0 | 0 | 3.3 | 0 | 1.8 | 2.5 | 2.5 | 2.5 | 2.5 | 2.5 |
| STANDBY | 0 | 1.8 | 0 | 3.3 | 5 | 5 | 5 | 3.3 | 3.3 | 0.3 | 0 | 0 | 3.3 | 0 | 1.8 | 2.5 | 2.5 | 2.5 | 2.5 | 2.5 |
| REF NO. | IC2101 | | | | | | | | | | | | | | | | | | | |
| MODE | 61 | 62 | 63 | 64 | 65 | 66 | 67 | 68 | 69 | 70 | 71 | 72 | 73 | 74 | 75 | 76 | 77 | 78 | 79 | 80 |
| CD PLAY | 2.6 | 2.6 | 2.6 | 1.8 | 0 | 3.3 | 2.6 | 2.6 | 2.6 | 2.6 | 2.6 | 2.6 | 2.6 | 2.6 | 2.6 | 1.8 | 2.4 | 1.2 | 1.3 | 1.3 |
| STANDBY | 2.6 | 2.6 | 2.6 | 1.8 | 0 | 3.3 | 2.6 | 2.6 | 2.6 | 2.6 | 2.6 | 2.6 | 2.6 | 2.6 | 2.6 | 1.8 | 2.4 | 1.2 | 1.3 | 1.3 |
| REF NO. | IC2101 | | | | | | | | | | | | | | | | | | | |
| MODE | 81 | 82 | 83 | 84 | 85 | 86 | 87 | 88 | 89 | 90 | 91 | 92 | 93 | 94 | 95 | 96 | 97 | 98 | 99 | 100 |
| CD PLAY | 1.2 | 1.3 | 1.3 | 1.3 | 1.3 | 1.2 | 0 | 0 | 3.3 | 1.3 | 1.3 | 1.3 | 1.3 | 1.3 | 1.3 | 1.3 | 1.3 | 1.3 | 1.8 | 0 |
| STANDBY | 1.2 | 1.3 | 1.3 | 1.3 | 1.3 | 1.2 | 0 | 0 | 3.3 | 1.3 | 1.3 | 1.3 | 1.3 | 1.3 | 1.3 | 1.3 | 1.3 | 1.3 | 1.8 | 0 |
| REF NO. | IC2102 | | | | | | | | | | | | | | | | | | | |
| MODE | 1 | 2 | 3 | 4 | 5 | | | | | | | | | | | | | | | |
| CD PLAY | 2.5 | 3.3 | 1.8 | - | 0 | | | | | | | | | | | | | | | |
| STANDBY | 2.5 | 3.3 | 1.8 | - | 0 | | | | | | | | | | | | | | | |
| REF NO. | IC2201 | | | | | | | | | | | | | | | | | | | |
| MODE | 1 | 2 | 3 | 4 | 5 | 6 | 7 | 8 | 9 | 10 | 11 | 12 | 13 | 14 | 15 | 16 | 17 | 18 | 19 | 20 |
| CD PLAY | 1.2 | 1 | 0 | 1 | 1 | 1.8 | 1 | 1 | 0 | 1 | 0.2 | 1.8 | 3.3 | 3.3 | 3.3 | 0 | 1.8 | 1.1 | 1.1 | 0 |
| STANDBY | 1.2 | 1 | 0 | 1 | 1 | 1.8 | 1 | 1 | 0 | 1 | 0.2 | 1.8 | 3.3 | 3.3 | 3.3 | 0 | 1.8 | 1.1 | 1.1 | 0 |

| REF NO. | IC2231 | | | | | | | | | | | | | | | | | | | |
|---|---|---|---|---|---|---|---|---|---|---|---|---|---|---|---|---|---|---|---|---|
| MODE | 1 | 2 | 3 | 4 | 5 | 6 | 7 | 8 | | | | | | | | | | | | |
| CD PLAY | 0 | 0 | 0 | 0 | 0 | 0 | 0 | 0 | | | | | | | | | | | | |
| STANDBY | 0 | 0 | 0 | 0 | 0 | 0 | 0 | 0 | | | | | | | | | | | | |
| REF NO. | IC2232 | | | | | | | | | | | | | | | | | | | |
| MODE | 1 | 2 | 3 | 4 | 5 | 6 | 7 | 8 | 9 | 10 | 11 | 12 | 13 | 14 | 15 | 16 | 17 | 18 | 19 | 20 |
| CD PLAY | 1.3 | 1.2 | 1.3 | 0 | 0 | 3.3 | 8 | 1.3 | 1.3 | 1.3 | 0 | 1.8 | 1.3 | 1.3 | 1.3 | 1.3 | 0 | 3.3 | 1 | 0 |
| STANDBY | 1.3 | 1.2 | 1.3 | 0 | 0 | 3.3 | 9 | 1.3 | 1.3 | 1.3 | 0 | 1.8 | 1.3 | 1.3 | 1.3 | 1.3 | 0 | 3.3 | 1 | 0 |
| REF NO. | IC2232 | | | | | | | | | | | | | | | | | | | |
| MODE | 21 | 22 | 23 | 24 | 25 | 26 | 27 | 28 | 29 | 30 | 31 | 32 | 33 | 34 | 35 | 36 | 37 | 38 | 39 | 40 |
| CD PLAY | 0 | 0 | 0 | 1.8 | 1.8 | 3.3 | 3.3 | 0 | 0 | 0 | 0 | 3.3 | 0 | 0 | 0 | 0 | 1.8 | 3.3 | 0.1 | 3.3 |
| STANDBY | 0 | 0 | 0 | 1.8 | 1.8 | 3.3 | 3.3 | 0 | 0 | 0 | 0 | 3.3 | 0 | 0 | 0 | 0 | 1.8 | 3.3 | 0.1 | 3.3 |
| REF NO. | IC2232 | | | | | | | | | | | | | | | | | | | |
| MODE | 41 | 42 | 43 | 44 | 45 | 46 | 47 | 48 | 49 | 50 | 51 | 52 | 53 | 54 | 55 | 56 | 57 | 58 | 59 | 60 |
| CD PLAY | 0 | 3.3 | 1 | 1 | 0 | 3.3 | 1 | 1 | 0 | 3.3 | 1 | 1 | 0 | 1.8 | 1 | 3.3 | 1 | 1 | 0 | 3.3 |
| STANDBY | 0 | 3.3 | 1 | 1 | 0 | 3.3 | 1 | 1 | 0 | 3.3 | 1 | 1 | 0 | 1.8 | 1 | 3.3 | 1 | 1 | 0 | 3.3 |
| REF NO. | IC2232 | | | | | | | | | | | | | | | | | | | |
| MODE | 61 | 62 | 63 | 64 | 65 | 66 | 67 | 68 | 69 | 70 | 71 | 72 | 73 | 74 | 75 | 76 | 77 | 78 | 79 | 80 |
| CD PLAY | 1 | 1 | 0 | 3.3 | 1 | 1 | 0 | 3.3 | 1 | 1 | 0 | 1.8 | 0 | 3.3 | 3.3 | - | - | 0 | 0 | 1.8 |
| STANDBY | 1 | 1 | 0 | 3.3 | 1 | 1 | 0 | 3.3 | 1 | 1 | 0 | 1.8 | 0 | 3.3 | 3.3 | - | - | 0 | 0 | 1.8 |
| REF NO. | IC2232 | | | | | | | | | | | | | | | | | | | |
| MODE | 81 | 82 | 83 | 84 | 85 | 86 | 87 | 88 | 89 | 90 | 91 | 92 | 93 | 94 | 95 | 96 | 97 | 98 | 99 | 100 |
| CD PLAY | 0 | 0 | 0 | 0 | 0 | 0 | 0 | 3.3 | 0 | 0 | 1.8 | 1.8 | 0 | 1.6 | 1.6 | 3.3 | 3.3 | - | 0 | 3.3 |
| STANDBY | 0 | 0 | 0 | 0 | 0 | 0 | 0 | 3.3 | 0 | 0 | 1.8 | 1.8 | 0 | 1.6 | 1.6 | 3.3 | 3.3 | - | 0 | 3.3 |
| REF NO. | IC2232 | | | | | | | | | | | | | | | | | | | |
| MODE | 101 | 102 | 103 | 104 | 105 | 106 | 107 | 108 | 109 | 110 | 111 | 112 | 113 | 114 | 115 | 116 | 117 | 118 | 119 | 120 |
| CD PLAY | 0 | 3.3 | 0 | 3.3 | 0 | 0 | 1.8 | 2.8 | 2.8 | 2.8 | 2.8 | 0 | 3.3 | 2.8 | 2.8 | 2.8 | 2.8 | 0 | 1.8 | 2.8 |
| STANDBY | 0 | 3.3 | 0 | 3.3 | 0 | 0 | 1.8 | 2.7 | 2.7 | 2.7 | 2.7 | 0 | 3.3 | 2.7 | 2.7 | 2.6 | 2.7 | 0 | 1.8 | 2.7 |
| REF NO. | IC2232 | | | | | | | | | | | | | | | | | | | |
| MODE | 121 | 122 | 123 | 124 | 125 | 126 | 127 | 128 | 129 | 130 | 131 | 132 | 133 | 134 | 135 | 136 | 137 | 138 | 139 | 140 |
| CD PLAY | 2.8 | 2.8 | 2.8 | 0 | 3.3 | 2.8 | 2.8 | 2.8 | 2.8 | 0 | 1.8 | 2.8 | 2.8 | 1.2 | 1.3 | 0 | 3.3 | 1.3 | 1.2 | 1.3 |
| STANDBY | 2.7 | 2.7 | 2.7 | 0 | 3.3 | 2.7 | 2.7 | 2.7 | 2.7 | 0 | 1.8 | 2.8 | 2.7 | 2.7 | 1.3 | 0 | 3.3 | 1.3 | 1.2 | 1.3 |
| REF NO. | IC2232 | | | | | | | | | | | | | | | | | | | |
| MODE | 141 | 142 | 143 | 144 | | | | | | | | | | | | | | | | |
| CD PLAY | 1.3 | 0 | 1.8 | 1.3 | | | | | | | | | | | | | | | | |
| STANDBY | 1.3 | 0 | 1.8 | 1.3 | | | | | | | | | | | | | | | | |
| REF NO. | IC2233 | | | | | | | | | | | | | | | | | | | |
| MODE | 1 | 2 | 3 | 4 | 5 | | | | | | | | | | | | | | | |
| CD PLAY | 2.5 | 3.3 | 1.8 | - | 0 | | | | | | | | | | | | | | | |
| STANDBY | 2.5 | 3.3 | 1.8 | - | 0 | | | | | | | | | | | | | | | |
| REF NO. | Q2101 | | | | Q2102 | | | | Q2103 | | | | Q2104 | | | | Q2105 | | | |
| MODE | E | C | B | | E | C | B | | E | C | B | | E | C | B | | E | C | B | |
| CD PLAY | 3.6 | 3.6 | 3.6 | | 0 | 3.6 | 0 | | 0 | 3.8 | 0 | | 0 | 0 | 0.6 | | 0 | 3.3 | 0 | |
| STANDBY | 3.6 | 3.7 | 3.6 | | 0 | 3.7 | 0 | | 0 | 4 | 0 | | 0 | 0 | 0.6 | | 0 | 3.3 | 0 | |
| REF NO. | Q2231 | | | | | | | Q2232 | | | | | Q2233 | | | | | | | |
| MODE | 1 | 2 | 3 | 4 | 5 | 6 | | 1 | 2 | 3 | 4 | 5 | | 1 | 2 | 3 | 4 | 5 | 6 | |
| CD PLAY | 0 | 0 | 0.6 | 0 | 0 | 0 | | 0 | -0.2 | 0 | 0 | 0 | | 0 | 0 | 0.6 | 0 | 0 | 0 | |
| STANDBY | 0 | 0 | 0.6 | 0 | 0 | 0 | | 0 | -0.2 | 0 | 0 | 0 | | 0 | 0 | 0.6 | 0 | 0 | 0 | |
| REF NO. | Q2234 | | | | | | Q2235 | | | | | | Q2236 | | | | | | | |
| MODE | 1 | 2 | 3 | 4 | 5 | | 1 | 2 | 3 | 4 | 5 | | 1 | 2 | 3 | 4 | 5 | | | |
| CD PLAY | 0 | -0.2 | 0 | 0 | 0 | | 0 | -0.2 | 0 | 3.3 | 0 | | 0 | -0.2 | 0 | 0 | 3.3 | | | |
| STANDBY | 0 | -0.2 | 0 | 0 | 0 | | 0 | -0.2 | 0 | 3.3 | 0 | | 0 | -0.2 | 0 | 0 | 3.3 | | | |
| REF NO. | QR2001 | | | | QR2002 | | | | QR2231 | | | | QR2232 | | | | | | | |
| MODE | E | C | B | | E | C | B | | E | C | B | | E | C | B | | | | | |
| CD PLAY | 0 | 0 | 2.8 | | 0 | 3.2 | 0 | | 0 | 0 | 3.2 | | 0 | 0 | 3.3 | | | | | |
| STANDBY | 0 | 0 | 2.8 | | 0 | 3.2 | 0 | | 0 | 0 | 3.2 | | 0 | 0 | 3.3 | | | | | |

**SA-BX500EB/EE/EG HDMI P.C.B.**

# 8.2. DSP P.C.B.

| REF NO. | IC3001 | | | | | | | | | | | | | | | | | | | |
|---|---|---|---|---|---|---|---|---|---|---|---|---|---|---|---|---|---|---|---|---|
| MODE | 1 | 2 | 3 | 4 | 5 | 6 | 7 | 8 | 9 | 10 | 11 | 12 | 13 | 14 | 15 | 16 | 17 | 18 | 19 | 20 |
| CD PLAY | 1.2 | 3.3 | 3.3 | 0 | 3.3 | 3.3 | 3.3 | 3.3 | 3.3 | 0 | 1.2 | 3.3 | 3.3 | 3.3 | 3.3 | 0 | 3.3 | 3.3 | 1.2 | 0 |
| STANDBY | 1.2 | 3.3 | 3.3 | 0 | 3.3 | 3.3 | 3.3 | 3.3 | 3.3 | 0 | 1.2 | 3.3 | 3.3 | 3.3 | 3.3 | 0 | 3.3 | 3.3 | 1.2 | 0 |
| REF NO. | IC3001 | | | | | | | | | | | | | | | | | | | |
| MODE | 21 | 22 | 23 | 24 | 25 | 26 | 27 | 28 | 29 | 30 | 31 | 32 | 33 | 34 | 35 | 36 | 37 | 38 | 39 | 40 |
| CD PLAY | 3.3 | 1.2 | 0 | 1.2 | 0 | 3.3 | 3.3 | 3.3 | 3.3 | 3.3 | 3.3 | 0 | 1.2 | 0 | 3.3 | 3.3 | 3.3 | 3.3 | 3.3 | 3.3 |
| STANDBY | 3.3 | 1.2 | 0 | 1.2 | 0 | 3.3 | 3.3 | 3.3 | 3.3 | 3.3 | 3.3 | 0 | 1.2 | 0 | 3.3 | 3.3 | 3.3 | 3.3 | 3.3 | 3.3 |
| REF NO. | IC3001 | | | | | | | | | | | | | | | | | | | |
| MODE | 41 | 42 | 43 | 44 | 45 | 46 | 47 | 48 | 49 | 50 | 51 | 52 | 53 | 54 | 55 | 56 | 57 | 58 | 59 | 60 |
| CD PLAY | 3.3 | 0 | 1.2 | 3.3 | 3.3 | 3.3 | 3.3 | 3.3 | 3.3 | 3.3 | 0 | 1.2 | 1.2 | 0 | 3.3 | 3.3 | 0 | 3.3 | 0 | 3.3 |
| STANDBY | 3.3 | 0 | 1.2 | 3.3 | 3.3 | 3.3 | 3.3 | 3.3 | 3.3 | 3.3 | 0 | 1.2 | 1.2 | 0 | 3.3 | 3.3 | 0 | 3.3 | 0 | 3.3 |
| REF NO. | IC3001 | | | | | | | | | | | | | | | | | | | |
| MODE | 61 | 62 | 63 | 64 | 65 | 66 | 67 | 68 | 69 | 70 | 71 | 72 | 73 | 74 | 75 | 76 | 77 | 78 | 79 | 80 |
| CD PLAY | 0 | 0 | 1.2 | 0 | 3.3 | 0 | 0 | 3.3 | 3.3 | 3.3 | 0 | 1.2 | 0 | 3.3 | 3.3 | 0 | 0 | 0 | 1.2 | 0 |
| STANDBY | 0 | 0 | 1.2 | 0 | 3.3 | 0 | 0 | 3.3 | 3.3 | 3.3 | 0 | 1.2 | 0 | 3.3 | 3.3 | 0 | 0 | 0 | 1.2 | 0 |
| REF NO. | IC3001 | | | | | | | | | | | | | | | | | | | |
| MODE | 81 | 82 | 83 | 84 | 85 | 86 | 87 | 88 | 89 | 90 | 91 | 92 | 93 | 94 | 95 | 96 | 97 | 98 | 99 | 100 |
| CD PLAY | 1.2 | 0 | 1.7 | 1.6 | 3.3 | 0 | 1.2 | 0 | 0 | 3.3 | 0 | 0 | 0 | 0 | 0 | 3.3 | 0 | 0 | 0 | 0 |
| STANDBY | 1.2 | 0 | 1.7 | 1.6 | 3.3 | 0 | 1.2 | 0 | 0 | 3.3 | 0 | 0 | 0 | 0 | 0 | 3.3 | 0 | 0 | 0 | 0 |
| REF NO. | IC3001 | | | | | | | | | | | | | | | | | | | |
| MODE | 101 | 102 | 103 | 104 | 105 | 106 | 107 | 108 | 109 | 110 | 111 | 112 | 113 | 114 | 115 | 116 | 117 | 118 | 119 | 120 |
| CD PLAY | 0 | 3.3 | 3.3 | 1.2 | 1.2 | 0 | 3.3 | 3.3 | 3.3 | 3.3 | 3.3 | 3.3 | 3.3 | 0 | 3.3 | 1.5 | 0 | 1.2 | 3.3 | 3.3 |
| STANDBY | 0 | 3.3 | 3.3 | 1.2 | 1.2 | 0 | 3.3 | 3.3 | 3.3 | 3.3 | 3.3 | 3.3 | 3.3 | 0 | 3.3 | 1.5 | 0 | 1.2 | 3.3 | 3.3 |
| REF NO. | IC3001 | | | | | | | | | | | | | | | | | | | |
| MODE | 121 | 122 | 123 | 124 | 125 | 126 | 127 | 128 | 129 | 130 | 131 | 132 | 133 | 134 | 135 | 136 | 137 | 138 | 139 | 140 |
| CD PLAY | 3.3 | 0 | 0 | 0 | 1.7 | 0 | 1.2 | 0 | 3.3 | 1.7 | 1.7 | 1.7 | 1.7 | 3.3 | 3.3 | 3.3 | 0.3 | 1.2 | 3.3 | 0 |
| STANDBY | 3.3 | 0 | 0 | 0 | 1.7 | 0 | 1.2 | 0 | 3.3 | 1.7 | 1.7 | 1.7 | 1.7 | 3.3 | 3.3 | 3.3 | 0 | 1.2 | 3.3 | 0 |
| REF NO. | IC3001 | | | | | | | | | | | | | | | | | | | |
| MODE | 141 | 142 | 143 | 144 | 145 | 146 | 147 | 148 | 149 | 150 | 151 | 152 | 153 | 154 | 155 | 156 | 157 | 158 | 159 | 160 |
| CD PLAY | 1.2 | 0 | 1.7 | 0 | 0 | 0 | 1.5 | 0 | 1.7 | 3.3 | 0 | 1.2 | 0 | 1.2 | 0 | 1.2 | 1.2 | 1.2 | 0 | 1.2 |
| STANDBY | 1.2 | 0 | 1.7 | 0 | 0 | 0 | 0 | 0 | 1.7 | 3.3 | 0 | 1.2 | 0 | 1.2 | 0 | 1.2 | 1.2 | 1.2 | 0 | 1.2 |
| REF NO. | IC3001 | | | | | | | | | | | | | | | | | | | |
| MODE | 161 | 162 | 163 | 164 | 165 | 166 | 167 | 168 | 169 | 170 | 171 | 172 | 173 | 174 | 175 | 176 | 177 | 178 | 179 | 180 |
| CD PLAY | 1.2 | 1.2 | 0 | 0 | 0 | 0 | 1.2 | 0 | 0 | 0 | 0 | 3.3 | 3.3 | 3.3 | 0.1 | 0 | 0.1 | 0.1 | 3.3 | 0 |
| STANDBY | 1.2 | 1.2 | 0 | 0 | 0 | 0 | 1.2 | 0 | 0 | 0 | 0 | 3.3 | 3.3 | 3.3 | 0.1 | 0 | 0.1 | 0.1 | 3.3 | 0 |
| REF NO. | IC3001 | | | | | | | | | | | | | | | | | | | |
| MODE | 181 | 182 | 183 | 184 | 185 | 186 | 187 | 188 | 189 | 190 | 191 | 192 | 193 | 194 | 195 | 196 | 197 | 198 | 199 | 200 |
| CD PLAY | 1.2 | 0 | 3.3 | 3.3 | 3.3 | 3.3 | 3.3 | 3.3 | 3.3 | 3.3 | 3.3 | 0 | 1.2 | 0 | 3.3 | 3.3 | 3.3 | 0.2 | 0.2 | 3.3 |
| STANDBY | 1.2 | 0 | 3.3 | 3.3 | 3.3 | 3.3 | 3.3 | 3.3 | 3.3 | 3.3 | 3.3 | 0 | 1.2 | 0 | 3.3 | 3.3 | 3.3 | 0.2 | 0.2 | 3.3 |
| REF NO. | IC3001 | | | | | | | | | | | | | | | | | | | |
| MODE | 201 | 202 | 203 | 204 | 205 | 206 | 207 | 208 | | | | | | | | | | | | |
| CD PLAY | 3.3 | 3.3 | 3.3 | 0 | 3.3 | 3.3 | 3.3 | 1.2 | | | | | | | | | | | | |
| STANDBY | 3.3 | 3.3 | 3.3 | 0 | 3.3 | 3.3 | 3.3 | 1.2 | | | | | | | | | | | | |
| REF NO. | IC3002 | | | | | | | | | | | | | | | | | | | |
| MODE | 1 | 2 | 3 | 4 | 5 | 6 | 7 | 8 | 9 | 10 | 11 | 12 | 13 | 14 | 15 | 16 | 17 | 18 | 19 | 20 |
| CD PLAY | 0 | 0 | 0 | 0 | 0 | 0 | 0 | 3.3 | 0 | 0 | 3.3 | 3.3 | 0 | 0 | 1.8 | 0 | 0 | 3.3 | 0 | 3.3 |
| STANDBY | 0 | 0 | 0 | 0 | 0 | 0 | 0 | 3.3 | 0 | 0 | 3.3 | 3.3 | 0 | 0 | 1.7 | 0 | 0 | 3.3 | 0 | 3.3 |
| REF NO. | IC3002 | | | | | | | | | | | | | | | | | | | |
| MODE | 21 | 22 | 23 | 24 | 25 | 26 | 27 | 28 | 29 | 30 | 31 | 32 | 33 | 34 | 35 | 36 | 37 | 38 | 39 | 40 |
| CD PLAY | 0 | 3.3 | 3.3 | 0 | 0 | 3.3 | 0 | 3.3 | 3.3 | 1.3 | 3.3 | 1.3 | 3.3 | 1.3 | 3.3 | 1.3 | 3.3 | 3.3 | 1.3 | 3.3 |
| STANDBY | 0 | 3.3 | 3.3 | 0 | 0 | 3.3 | 0 | 3.3 | 3.3 | 1.3 | 3.3 | 1.3 | 3.3 | 1.3 | 3.3 | 1.4 | 3.3 | 3.3 | 1.4 | 3.3 |
| REF NO. | IC3002 | | | | | | | | | | | | | | | | | | | |
| MODE | 41 | 42 | 43 | 44 | 45 | 46 | 47 | 48 | | | | | | | | | | | | |
| CD PLAY | 1.4 | 3.3 | 1.3 | 3.3 | 0 | 0 | 0 | 0 | | | | | | | | | | | | |
| STANDBY | 1.4 | 3.3 | 1.5 | 3.3 | 0 | 0 | 0 | 0 | | | | | | | | | | | | |
| REF NO. | IC3003 | | | | | | | | | | | | | | | | | | | |
| MODE | 1 | 2 | 3 | 4 | 5 | 6 | 7 | 8 | 9 | 10 | 11 | 12 | 13 | 14 | 15 | 16 | 17 | 18 | 19 | 20 |
| CD PLAY | 3.3 | 3.3 | 3.3 | 0 | 3.3 | 3.3 | 3.3 | 3.3 | 3.3 | 0 | 3.3 | 3.3 | 3.3 | 0 | 3.3 | 3.3 | 3.3 | 3.3 | 0 | 3.3 |
| STANDBY | 3.3 | 3.3 | 3.3 | 0 | 3.3 | 3.3 | 3.3 | 3.3 | 3.3 | 0 | 3.3 | 3.3 | 3.3 | 0 | 3.3 | 3.3 | 3.3 | 3.3 | 0 | 3.3 |
| REF NO. | IC3003 | | | | | | | | | | | | | | | | | | | |
| MODE | 21 | 22 | 23 | 24 | 25 | 26 | 27 | 28 | 29 | 30 | 31 | 32 | 33 | 34 | 35 | 36 | 37 | 38 | 39 | 40 |
| CD PLAY | 0 | 0 | 3.3 | 3.3 | 3.3 | 0 | 0 | 3.3 | 0 | 3.3 | 3.3 | 0 | 0 | 3.3 | 1.6 | 0 | 0 | 3.3 | 3.3 | 3.3 |
| STANDBY | 0 | 0 | 3.3 | 3.3 | 3.3 | 0 | 0 | 3.3 | 0 | 3.3 | 3.3 | 0 | 0 | 3.3 | 1.6 | 0 | 0 | 3.3 | 3.3 | 3.3 |
| REF NO. | IC3003 | | | | | | | | | | | | | | | | | | | |
| MODE | 41 | 42 | 43 | 44 | 45 | 46 | 47 | 48 | 19 | 50 | | | | | | | | | | |
| CD PLAY | 0 | 3.3 | 3.3 | 3.3 | 3.3 | 3.3 | 0 | 3.3 | 0 | 0 | | | | | | | | | | |
| STANDBY | 0 | 3.3 | 3.3 | 3.3 | 3.3 | 3.3 | 0 | 3.3 | 0 | 0 | | | | | | | | | | |
| REF NO. | IC3004 | | | | | | | | | | | | | | | | | | | |
| MODE | 1 | 2 | 3 | 4 | 5 | 6 | 7 | 8 | 9 | 10 | 11 | 12 | 13 | 14 | 15 | 16 | 17 | 18 | 19 | 20 |
| CD PLAY | 3.3 | 3.3 | 3.3 | 0 | 3.3 | 3.3 | 3.3 | 3.3 | 3.3 | 0 | 3.3 | 3.3 | 3.3 | 0 | 3.3 | 3.3 | 3.3 | 3.3 | 0 | 3.3 |
| STANDBY | 3.3 | 3.3 | 3.3 | 0 | 3.3 | 3.3 | 3.3 | 3.3 | 3.3 | 0 | 3.3 | 3.3 | 3.3 | 0 | 3.3 | 3.3 | 3.3 | 3.3 | 0 | 3.3 |
| REF NO. | IC3004 | | | | | | | | | | | | | | | | | | | |
| MODE | 21 | 22 | 23 | 24 | 25 | 26 | 27 | 28 | 29 | 30 | 31 | 32 | 33 | 34 | 35 | 36 | 37 | 38 | 39 | 40 |
| CD PLAY | 0 | 0 | 3.3 | 3.3 | 3.3 | 0 | 0 | 3.3 | 0 | 3.3 | 3.3 | 0 | 0 | 3.3 | 1.6 | 0 | 0 | 3.3 | 3.3 | 3.3 |
| STANDBY | 0 | 0 | 3.3 | 3.3 | 3.3 | 0 | 0 | 3.3 | 0 | 3.3 | 3.3 | 0 | 0 | 3.3 | 1.6 | 0 | 0 | 3.3 | 3.3 | 3.3 |
| REF NO. | IC3004 | | | | | | | | | | | | | | | | | | | |
| MODE | 41 | 42 | 43 | 44 | 45 | 46 | 47 | 48 | 49 | 50 | | | | | | | | | | |
| CD PLAY | 0 | 3.3 | 3.3 | 3.3 | 3.3 | 3.3 | 0 | 3.3 | 0 | 0 | | | | | | | | | | |
| STANDBY | 0 | 3.3 | 3.3 | 3.3 | 3.3 | 3.3 | 0 | 3.3 | 0 | 0 | | | | | | | | | | |

| REF NO. | IC3101 | | | | | | | | | | | | | | | | | | | |
|---|---|---|---|---|---|---|---|---|---|---|---|---|---|---|---|---|---|---|---|---|
| MODE | 1 | 2 | 3 | 4 | 5 | 6 | 7 | 8 | 9 | 10 | 11 | 12 | 13 | 14 | 15 | 16 | 17 | 18 | 19 | 20 |
| CD PLAY | 1.2 | 3.3 | 3.3 | 0 | 3.3 | 3.3 | 3.3 | 3.3 | 3.3 | 0 | 1.2 | 3.3 | 3.3 | 3.3 | 3.3 | 0 | 3.3 | 3.3 | 1.2 | 0 |
| STANDBY | 1.2 | 3.3 | 3.3 | 0 | 3.3 | 3.3 | 3.3 | 3.3 | 3.3 | 0 | 1.2 | 3.3 | 3.3 | 3.3 | 3.3 | 0 | 3.3 | 3.3 | 1.2 | 0 |
| REF NO. | IC3101 | | | | | | | | | | | | | | | | | | | |
| MODE | 21 | 22 | 23 | 24 | 25 | 26 | 27 | 28 | 29 | 30 | 31 | 32 | 33 | 34 | 35 | 36 | 37 | 38 | 39 | 40 |
| CD PLAY | 3.3 | 1.2 | 0 | 1.2 | 0 | 3.3 | 3.3 | 3.3 | 3.3 | 3.3 | 3.3 | 0 | 1.2 | 0 | 3.3 | 3.3 | 3.3 | 3.3 | 3.3 | 3.3 |
| STANDBY | 3.3 | 1.2 | 0 | 1.2 | 0 | 3.3 | 3.3 | 3.3 | 3.3 | 3.3 | 3.3 | 0 | 1.2 | 0 | 3.3 | 3.3 | 3.3 | 3.3 | 3.3 | 3.3 |
| REF NO. | IC3101 | | | | | | | | | | | | | | | | | | | |
| MODE | 41 | 42 | 43 | 44 | 45 | 46 | 47 | 48 | 49 | 50 | 51 | 52 | 53 | 54 | 55 | 56 | 57 | 58 | 59 | 60 |
| CD PLAY | 3.3 | 0 | 1.2 | 3.3 | 3.3 | 3.3 | 3.3 | 3.3 | 3.3 | 3.3 | 0 | 1.2 | 1.2 | 0 | 3.3 | 0 | 0 | 0 | 3.3 | 3.3 |
| STANDBY | 3.3 | 0 | 1.2 | 3.3 | 3.3 | 3.3 | 3.3 | 3.3 | 3.3 | 3.3 | 0 | 1.2 | 1.2 | 0 | 3.3 | 0 | 0 | 0 | 3.3 | 3.3 |
| REF NO. | IC3101 | | | | | | | | | | | | | | | | | | | |
| MODE | 61 | 62 | 63 | 64 | 65 | 66 | 67 | 68 | 69 | 70 | 71 | 72 | 73 | 74 | 75 | 76 | 77 | 78 | 79 | 80 |
| CD PLAY | 0 | 0 | 1.2 | 0 | 3.3 | 3.3 | 0 | 3.3 | 3.3 | 0 | 0 | 1.2 | 0 | 3.3 | 0 | 0 | 0 | 0 | 1.2 | 0 |
| STANDBY | 0 | 0 | 1.2 | 0 | 3.3 | 3.3 | 0 | 3.3 | 3.3 | 0 | 0 | 1.2 | 0 | 3.3 | 0 | 0 | 0 | 0 | 1.2 | 0 |
| REF NO. | IC3101 | | | | | | | | | | | | | | | | | | | |
| MODE | 81 | 82 | 83 | 84 | 85 | 86 | 87 | 88 | 89 | 90 | 91 | 92 | 93 | 94 | 95 | 96 | 97 | 98 | 99 | 100 |
| CD PLAY | 1.2 | 0 | 1.7 | 1.6 | 3.3 | 0 | 0 | 0 | 0 | 3.3 | 0 | 0 | 0 | 0 | 0 | 3.3 | 0 | 0 | 0 | 0 |
| STANDBY | 1.2 | 0 | 1.7 | 1.6 | 3.3 | 0 | 0 | 0 | 0 | 3.3 | 0 | 0 | 0 | 0 | 0 | 3.3 | 0 | 0 | 0 | 0 |
| REF NO. | IC3101 | | | | | | | | | | | | | | | | | | | |
| MODE | 101 | 102 | 103 | 104 | 105 | 106 | 107 | 108 | 109 | 110 | 111 | 112 | 113 | 114 | 115 | 116 | 117 | 118 | 119 | 120 |
| CD PLAY | 0 | 3.3 | 3.3 | 1.2 | 1.2 | 0 | 3.3 | 3.3 | 3.3 | 3.3 | 3.3 | 3.3 | 3.3 | 0 | 3.3 | 1.6 | 0 | 1.2 | 3.3 | 3.3 |
| STANDBY | 0 | 3.3 | 3.3 | 1.2 | 1.2 | 0 | 3.3 | 3.3 | 3.3 | 3.3 | 3.3 | 3.3 | 3.3 | 0 | 3.3 | 1.6 | 0 | 1.2 | 3.3 | 3.3 |
| REF NO. | IC3101 | | | | | | | | | | | | | | | | | | | |
| MODE | 121 | 122 | 123 | 124 | 125 | 126 | 127 | 128 | 129 | 130 | 131 | 132 | 133 | 134 | 135 | 136 | 137 | 138 | 139 | 140 |
| CD PLAY | 3.3 | 0 | 0 | 0 | 1.7 | 0 | 1.2 | 0 | 3.3 | 1.7 | 1.7 | 1.7 | 1.7 | 0 | 0.7 | 0 | 1.5 | 1.2 | 3.3 | 0 |
| STANDBY | 3.3 | 0 | 0 | 0 | 1.7 | 0 | 1.2 | 0 | 3.3 | 1.7 | 1.7 | 1.7 | 1.7 | 0 | 0 | 0 | 0 | 1.2 | 3.3 | 0 |
| REF NO. | IC3101 | | | | | | | | | | | | | | | | | | | |
| MODE | 141 | 142 | 143 | 144 | 145 | 146 | 147 | 148 | 149 | 150 | 151 | 152 | 153 | 154 | 155 | 156 | 157 | 158 | 159 | 160 |
| CD PLAY | 1.2 | 0 | 1.7 | 0 | 0 | 0 | 1.6 | 0 | 0 | 3.3 | 0 | 1.2 | 0 | 1.2 | 0 | 1.2 | 1.2 | 1.2 | 0 | 1.2 |
| STANDBY | 1.2 | 0 | 1.7 | 0 | 0 | 0 | 0 | 0 | 0 | 3.3 | 0 | 1.2 | 0 | 1.2 | 0 | 1.2 | 1.2 | 1.2 | 0 | 1.2 |
| REF NO. | IC3101 | | | | | | | | | | | | | | | | | | | |
| MODE | 161 | 162 | 163 | 164 | 165 | 166 | 167 | 168 | 169 | 170 | 171 | 172 | 173 | 174 | 175 | 176 | 177 | 178 | 179 | 180 |
| CD PLAY | 1.2 | 1.2 | 3.3 | 0 | 0 | 0 | 1.2 | 0 | 0 | 0 | 0 | 3.3 | 3.3 | 1.2 | 0.1 | 0.1 | 0.1 | 0.1 | 3.3 | 0 |
| STANDBY | 1.2 | 1.2 | 3.3 | 0 | 0 | 0 | 1.2 | 0 | 0 | 0 | 0 | 3.3 | 3.3 | 1.2 | 0.1 | 0.1 | 0.1 | 0.1 | 3.3 | 0 |
| REF NO. | IC3101 | | | | | | | | | | | | | | | | | | | |
| MODE | 181 | 182 | 183 | 184 | 185 | 186 | 187 | 188 | 189 | 190 | 191 | 192 | 193 | 194 | 195 | 196 | 197 | 198 | 199 | 200 |
| CD PLAY | 1.2 | 0 | 1.7 | 1.7 | 1.7 | 1.7 | 3.3 | 3.3 | 3.3 | 3.3 | 3.3 | 0 | 1.2 | 0 | 3.3 | 3.3 | 3.3 | 0.2 | 0.2 | 3.3 |
| STANDBY | 1.2 | 0 | 1.7 | 1.7 | 1.7 | 1.7 | 3.3 | 3.3 | 3.3 | 3.3 | 3.3 | 0 | 1.2 | 0 | 3.3 | 3.3 | 3.3 | 0.2 | 0.2 | 3.3 |
| REF NO. | IC3101 | | | | | | | | | | | | | | | | | | | |
| MODE | 201 | 202 | 203 | 204 | 205 | 206 | 207 | 208 | | | | | | | | | | | | |
| CD PLAY | 3.3 | 3.3 | 3.3 | 0 | 3.3 | 3.3 | 3.3 | 1.2 | | | | | | | | | | | | |
| STANDBY | 3.3 | 3.3 | 3.3 | 0 | 3.3 | 3.3 | 3.3 | 1.2 | | | | | | | | | | | | |
| REF NO. | IC3102 | | | | | | | | | | | | | | | | | | | |
| MODE | 1 | 2 | 3 | 4 | 5 | 6 | 7 | 8 | 9 | 10 | 11 | 12 | 13 | 14 | 15 | 16 | 17 | 18 | 19 | 20 |
| CD PLAY | 0 | 0 | 0 | 0 | 0 | 0 | 0 | 3.3 | 0 | 0 | 3.3 | 3.3 | 0 | 0 | 1.8 | 0 | 0 | 3.3 | 0 | 3.3 |
| STANDBY | 0 | 0 | 0 | 0 | 0 | 0 | 0 | 3.3 | 0 | 0 | 3.3 | 3.3 | 0 | 0 | 1.7 | 0 | 0 | 3.3 | 0 | 3.3 |
| REF NO. | IC3102 | | | | | | | | | | | | | | | | | | | |
| MODE | 21 | 22 | 23 | 24 | 25 | 26 | 27 | 28 | 29 | 30 | 31 | 32 | 33 | 34 | 35 | 36 | 37 | 38 | 39 | 40 |
| CD PLAY | 0 | 3.3 | 3.3 | 0 | 0 | 3.3 | 0 | 3.3 | 3.3 | 1.3 | 3.3 | 1.3 | 3.3 | 1.3 | 3.3 | 1.3 | 3.3 | 3.3 | 1.3 | 3.3 |
| STANDBY | 0 | 3.3 | 3.3 | 0 | 0 | 3.3 | 0 | 3.3 | 3.3 | 1.3 | 3.3 | 1.3 | 3.3 | 1.3 | 3.3 | 1.4 | 3.3 | 3.3 | 1.4 | 3.3 |
| REF NO. | IC3102 | | | | | | | | | | | | | | | | | | | |
| MODE | 41 | 42 | 43 | 44 | 45 | 46 | 47 | 48 | | | | | | | | | | | | |
| CD PLAY | 1.4 | 3.3 | 1.3 | 3.3 | 0 | 0 | 0 | 0 | | | | | | | | | | | | |
| STANDBY | 1.4 | 3.3 | 1.5 | 3.3 | 0 | 0 | 0 | 0 | | | | | | | | | | | | |
| REF NO. | IC3103 | | | | | | | | | | | | | | | | | | | |
| MODE | 1 | 2 | 3 | 4 | 5 | 6 | 7 | 8 | 9 | 10 | 11 | 12 | 13 | 14 | 15 | 16 | 17 | 18 | 19 | 20 |
| CD PLAY | 3.3 | 3.3 | 3.3 | 0 | 3.3 | 3.3 | 3.3 | 3.3 | 3.3 | 0 | 3.3 | 3.3 | 3.3 | 0 | 3.3 | 3.3 | 3.3 | 3.3 | 0 | 3.3 |
| STANDBY | 3.3 | 3.3 | 3.3 | 0 | 3.3 | 3.3 | 3.3 | 3.3 | 3.3 | 0 | 3.3 | 3.3 | 3.3 | 0 | 3.3 | 3.3 | 3.3 | 3.3 | 0 | 3.3 |
| REF NO. | IC3103 | | | | | | | | | | | | | | | | | | | |
| MODE | 21 | 22 | 23 | 24 | 25 | 26 | 27 | 28 | 29 | 30 | 31 | 32 | 33 | 34 | 35 | 36 | 37 | 38 | 39 | 40 |
| CD PLAY | 0 | 0 | 3.3 | 3.3 | 3.3 | 0 | 0 | 3.3 | 0 | 3.3 | 3.3 | 0 | 0 | 3.3 | 1.6 | 0 | 0 | 3.3 | 3.3 | 3.3 |
| STANDBY | 0 | 0 | 3.3 | 3.3 | 3.3 | 0 | 0 | 3.3 | 0 | 3.3 | 3.3 | 0 | 0 | 3.3 | 1.6 | 0 | 0 | 3.3 | 3.3 | 3.3 |
| REF NO. | IC3103 | | | | | | | | | | | | | | | | | | | |
| MODE | 41 | 42 | 43 | 44 | 45 | 46 | 47 | 48 | 19 | 50 | | | | | | | | | | |
| CD PLAY | 0 | 3.3 | 3.3 | 3.3 | 3.3 | 3.3 | 0 | 3.3 | 0 | 0 | | | | | | | | | | |
| STANDBY | 0 | 3.3 | 3.3 | 3.3 | 3.3 | 3.3 | 0 | 3.3 | 0 | 0 | | | | | | | | | | |
| REF NO. | IC3104 | | | | | | | | | | | | | | | | | | | |
| MODE | 1 | 2 | 3 | 4 | 5 | 6 | 7 | 8 | 9 | 10 | 11 | 12 | 13 | 14 | 15 | 16 | 17 | 18 | 19 | 20 |
| CD PLAY | 3.3 | 3.3 | 3.3 | 0 | 3.3 | 3.3 | 3.3 | 3.3 | 3.3 | 0 | 3.3 | 3.3 | 3.3 | 0 | 3.3 | 3.3 | 3.3 | 3.3 | 0 | 3.3 |
| STANDBY | 3.3 | 3.3 | 3.3 | 0 | 3.3 | 3.3 | 3.3 | 3.3 | 3.3 | 0 | 3.3 | 3.3 | 3.3 | 0 | 3.3 | 3.3 | 3.3 | 3.3 | 0 | 3.3 |
| REF NO. | IC3104 | | | | | | | | | | | | | | | | | | | |
| MODE | 21 | 22 | 23 | 24 | 25 | 26 | 27 | 28 | 29 | 30 | 31 | 32 | 33 | 34 | 35 | 36 | 37 | 38 | 39 | 40 |
| CD PLAY | 0 | 0 | 3.3 | 3.3 | 3.3 | 0 | 0 | 3.3 | 0 | 3.3 | 3.3 | 0 | 0 | 3.3 | 1.6 | 0 | 0 | 3.3 | 3.3 | 3.3 |
| STANDBY | 0 | 0 | 3.3 | 3.3 | 3.3 | 0 | 0 | 3.3 | 0 | 3.3 | 3.3 | 0 | 0 | 3.3 | 1.6 | 0 | 0 | 3.3 | 3.3 | 3.3 |
| REF NO. | IC3104 | | | | | | | | | | | | | | | | | | | |
| MODE | 41 | 42 | 43 | 44 | 45 | 46 | 47 | 48 | 49 | 50 | | | | | | | | | | |
| CD PLAY | 0 | 3.3 | 3.3 | 3.3 | 3.3 | 3.3 | 0 | 3.3 | 0 | 0 | | | | | | | | | | |
| STANDBY | 0 | 3.3 | 3.3 | 3.3 | 3.3 | 3.3 | 0 | 3.3 | 0 | 0 | | | | | | | | | | |

| REF NO. | IC3201 | | | | | | | | | | | | | | | | | | | |
|---|---|---|---|---|---|---|---|---|---|---|---|---|---|---|---|---|---|---|---|---|
| MODE | 1 | 2 | 3 | 4 | 5 | 6 | 7 | 8 | 9 | 10 | 11 | 12 | 13 | 14 | 15 | 16 | | | | |
| CD PLAY | 2.2 | 2.5 | 0 | 2.5 | 0 | 5.1 | 3.3 | 0 | 1.2 | 1.7 | 1.7 | 1.7 | 3.3 | 3.3 | 0 | 0 | | | | |
| STANDBY | 2.2 | 2.5 | 0 | 2.5 | 0 | 5.1 | 3.3 | 0 | 1.2 | 1.7 | 1.7 | 1.7 | 3.3 | 3.3 | 0 | 0 | | | | |
| REF NO. | IC3401 | | | | | | | | | | | | | | | | | | | |
| MODE | 1 | 2 | 3 | 4 | 5 | | | | | | | | | | | | | | | |
| CD PLAY | 0 | 0.2 | 0 | 0.2 | 0 | | | | | | | | | | | | | | | |
| STANDBY | 0 | 0.2 | 0 | 0.2 | 0 | | | | | | | | | | | | | | | |
| REF NO. | IC3402 | | | | | | | | | | | | | | | | | | | |
| MODE | 1 | 2 | 3 | 4 | 5 | | | | | | | | | | | | | | | |
| CD PLAY | 0 | 1.7 | 0 | 1.7 | 3.3 | | | | | | | | | | | | | | | |
| STANDBY | 0 | 1.7 | 0 | 1.7 | 3.3 | | | | | | | | | | | | | | | |
| REF NO. | IC3403 | | | | | | | | | | | | | | | | | | | |
| MODE | 1 | 2 | 3 | 4 | 5 | 6 | 7 | 8 | | | | | | | | | | | | |
| CD PLAY | 0.2 | 1.7 | 1.6 | 0 | 1.7 | 3.3 | 0 | 3.3 | | | | | | | | | | | | |
| STANDBY | 0.2 | 1.7 | 1.6 | 0 | 1.7 | 3.3 | 0 | 3.3 | | | | | | | | | | | | |
| REF NO. | IC3404 | | | | | | | | | | | | | | | | | | | |
| MODE | 1 | 2 | 3 | 4 | 5 | 6 | 7 | 8 | 9 | 10 | 11 | 12 | 13 | 14 | 15 | 16 | 17 | 18 | 19 | 20 |
| CD PLAY | 1.6 | 0 | 2.6 | 0 | 0 | 0 | 0 | 0 | 0 | 0 | 3.3 | 0 | 5.1 | 0 | 0 | 0 | 0.7 | 0.1 | 0 | 3.3 |
| STANDBY | 1.6 | 0 | 2.6 | 0 | 0 | 0 | 0 | 0 | 0 | 0 | 3.3 | 0 | 5.1 | 0 | 0 | 0 | 0.7 | 0.1 | 0 | 3.3 |
| REF NO. | IC3404 | | | | | | | | | | | | | | | | | | | |
| MODE | 21 | 22 | 23 | 24 | 25 | 26 | 27 | 28 | 29 | 30 | 31 | 32 | 33 | 34 | 35 | 36 | 37 | 38 | 39 | 40 |
| CD PLAY | 3.3 | 0 | 1.7 | 1.7 | 0.3 | 1.7 | 1.7 | 1.3 | 1.5 | 1.7 | 3.3 | 3.3 | 0.2 | 0.2 | 3.3 | 3.3 | 3.3 | 3.3 | 1.2 | 1.2 |
| STANDBY | 3.3 | 0 | 1.7 | 1.7 | 0 | 1.7 | 1.7 | 1.2 | 1.5 | 1.7 | 3.3 | 3.3 | 0.2 | 0.2 | 3.3 | 3.3 | 3.3 | 3.3 | 1.2 | 1.2 |
| REF NO. | IC3404 | | | | | | | | | | | | | | | | | | | |
| MODE | 41 | 42 | 43 | 44 | 45 | 46 | 47 | 48 | | | | | | | | | | | | |
| CD PLAY | 0 | 1.7 | 0 | 1.6 | 0 | 1.6 | 0 | 1.6 | | | | | | | | | | | | |
| STANDBY | 0 | 1.7 | 0 | 1.6 | 0 | 1.6 | 0 | 1.6 | | | | | | | | | | | | |
| REF NO. | IC3501 | | | | | | | | | | | | | | | | | | | |
| MODE | 1 | 2 | 3 | 4 | 5 | 6 | 7 | 8 | 9 | 10 | 11 | 12 | 13 | 14 | 15 | 16 | 17 | 18 | 19 | 20 |
| CD PLAY | 1.6 | 1.6 | 1.6 | 1.6 | 3.3 | 3.3 | 0.2 | 0.2 | 0 | 0 | 0 | 5.0 | 5.0 | 5.0 | 0 | 0 | 2.5 | 2.5 | 2.5 | 2.5 |
| STANDBY | 1.7 | 1.7 | 0 | 1.7 | 3.3 | 3.3 | 0.2 | 0.2 | 0 | 0 | 0 | 5.0 | 5.0 | 5.0 | 0 | 0 | 2.5 | 2.5 | 2.5 | 2.5 |
| REF NO. | IC3501 | | | | | | | | | | | | | | | | | | | |
| MODE | 21 | 22 | 23 | 24 | 25 | 26 | 27 | 28 | 29 | 30 | | | | | | | | | | |
| CD PLAY | 2.5 | 2.5 | 0 | 2.5 | 2.5 | 2.5 | 0 | 5.1 | 0 | 0 | | | | | | | | | | |
| STANDBY | 2.5 | 2.5 | 0 | 2.5 | 2.5 | 2.5 | 0 | 5.1 | 5.1 | 5.1 | | | | | | | | | | |
| REF NO. | IC3551 | | | | | | | | | | | | | | | | | | | |
| MODE | 1 | 2 | 3 | 4 | 5 | 6 | 7 | 8 | 9 | 10 | 11 | 12 | 13 | 14 | 15 | 16 | 17 | 18 | 19 | 20 |
| CD PLAY | 0 | 3.3 | 0 | 1.3 | 0 | 0 | 0 | 0 | 0 | 0 | 0 | 0 | 0 | 0 | 0 | 0 | 0 | 3.3 | 0 | 3.3 |
| STANDBY | 0 | 3.3 | 0 | 1.3 | 0 | 0 | 0 | 0 | 0 | 0 | 0 | 0 | 0 | 0 | 0 | 0 | 0 | 3.3 | 0 | 3.3 |
| REF NO. | IC3601 | | | | | | | | | | | | | | | | | | | |
| MODE | 1 | 2 | 3 | 4 | 5 | 6 | 7 | 8 | | | | | | | | | | | | |
| CD PLAY | 5.1 | 4.5 | 1.3 | 1.3 | 0.8 | 0 | 3.5 | 5.1 | | | | | | | | | | | | |
| STANDBY | 5.1 | 4.5 | 1.3 | 1.3 | 0.8 | 0 | 3.5 | 5.1 | | | | | | | | | | | | |
| REF NO. | IC3602 | | | | | | | | | | | | | | | | | | | |
| MODE | 1 | 2 | 3 | 4 | 5 | 6 | 7 | 8 | | | | | | | | | | | | |
| CD PLAY | 3.3 | 0 | 0 | 1.9 | 5.1 | 0 | 0 | 4.4 | | | | | | | | | | | | |
| STANDBY | 3.3 | 0 | 0 | 1.9 | 5.1 | 0 | 0 | 4.4 | | | | | | | | | | | | |
| REF NO. | Q3601 | | | | | | | QR3401 | | | | QR3601 | | | | | | | | |
| MODE | 1 | 2 | 3 | 4 | 5 | 6 | | E | C | B | | E | C | B | | | | | | |
| CD PLAY | 1.3 | 1.3 | 3.5 | 5.1 | 1.3 | 1.3 | | 3.3 | 0 | 3.3 | | 0 | 3.2 | 0.2 | | | | | | |
| STANDBY | 1.3 | 1.3 | 3.5 | 5.1 | 1.3 | 1.3 | | 3.3 | 0 | 3.3 | | 0 | 3.2 | 0.2 | | | | | | |

**SA-BX500EB/EE/EG DSP P.C.B.**

# 8.3. D-Amp A (4CH) P.C.B.

| REF NO. | IC5000 | | | | | | | | | | | | | | | | | | | |
|---|---|---|---|---|---|---|---|---|---|---|---|---|---|---|---|---|---|---|---|---|
| MODE | 1 | 2 | 3 | 4 | 5 | 6 | 7 | 8 | 9 | 10 | 11 | 12 | 13 | 14 | 15 | 16 | 17 | 18 | 19 | 20 |
| CD PLAY | 2.5 | 0.1 | 0.1 | 2.9 | 0 | -29.3 | -29.3 | 29.3 | 11 | -0.1 | -29.5 | -17.3 | -29.5 | -0.1 | 11 | 29.3 | -29.3 | -29.3 | 0 | 29 |
| STANDBY | 2.5 | 0.1 | 0.1 | 2.9 | 0 | -29.3 | -21 | 29.3 | 11 | -0.1 | -29.5 | -17.3 | -29.5 | -0.1 | 11 | 29.3 | -29.3 | -29.2 | 0 | 29 |
| REF NO. | IC5000 | | | | | | | | | | | | | | | | | | | |
| MODE | 21 | 22 | 23 | | | | | | | | | | | | | | | | | |
| CD PLAY | -0.1 | -0.1 | 2.5 | | | | | | | | | | | | | | | | | |
| STANDBY | -0.1 | -0.1 | 2.5 | | | | | | | | | | | | | | | | | |
| REF NO. | IC5200 | | | | | | | | | | | | | | | | | | | |
| MODE | 1 | 2 | 3 | 4 | 5 | 6 | 7 | 8 | 9 | 10 | 11 | 12 | 13 | 14 | 15 | 16 | 17 | 18 | 19 | 20 |
| CD PLAY | 2.5 | -0.1 | -0.1 | 29 | 0 | -29.3 | -29.3 | 29.3 | 11 | -0.1 | -29.5 | -17.3 | -29.5 | -0.1 | 11 | 29.3 | -29.3 | -29.3 | 0 | 29 |
| STANDBY | 2.5 | -0.1 | -0.1 | 29 | 0 | -29.3 | -29.3 | 29.3 | 11 | -0.1 | -29.5 | -17.3 | -29.5 | -0.1 | 11 | 29.3 | -29.3 | -29.3 | 0 | 29 |
| REF NO. | IC5200 | | | | | | | | | | | | | | | | | | | |
| MODE | 21 | 22 | 23 | | | | | | | | | | | | | | | | | |
| CD PLAY | -0.1 | -0.1 | 2.5 | | | | | | | | | | | | | | | | | |
| STANDBY | -0.1 | -0.1 | 2.5 | | | | | | | | | | | | | | | | | |
| REF NO. | IC5300 | | | | | | | | | | | | | | | | | | | |
| MODE | 1 | 2 | 3 | 4 | 5 | 6 | 7 | 8 | 9 | 10 | 11 | 12 | 13 | 14 | 15 | 16 | 17 | 18 | 19 | 20 |
| CD PLAY | 2.5 | -0.1 | -0.1 | 29 | 0 | -29.3 | -29.3 | 29.3 | 11 | -0.1 | -29.5 | -17.3 | -29.5 | -0.1 | 11 | 29.3 | -29.3 | -29.3 | 0 | 29 |
| STANDBY | 2.5 | -0.1 | -0.1 | 29 | 0 | -29.3 | -29.3 | 29.3 | 11 | -0.1 | -29.5 | -17.3 | -29.5 | -0.1 | 11 | 29.3 | -29.3 | -29.3 | 0 | 29 |
| REF NO. | IC5300 | | | | | | | | | | | | | | | | | | | |
| MODE | 21 | 22 | 23 | | | | | | | | | | | | | | | | | |
| CD PLAY | -0.1 | -0.1 | 2.5 | | | | | | | | | | | | | | | | | |
| STANDBY | -0.1 | -0.1 | 2.5 | | | | | | | | | | | | | | | | | |
| REF NO. | IC5400 | | | | | | | | | | | | | | | | | | | |
| MODE | 1 | 2 | 3 | 4 | 5 | 6 | 7 | 8 | 9 | 10 | 11 | 12 | 13 | 14 | 15 | 16 | 17 | 18 | 19 | 20 |
| CD PLAY | 2.5 | -0.1 | -0.1 | 29 | 0 | -29.3 | -29.3 | 29.3 | 11 | -0.1 | -29.5 | -17.3 | -29.5 | -0.1 | 11 | 29.3 | -29.3 | -29.3 | 0 | 29 |
| STANDBY | 2.5 | -0.1 | -0.1 | 29 | 0 | -29.3 | -29.3 | 29.3 | 11 | -0.1 | -29.5 | -17.3 | -29.5 | -0.1 | 11 | 29.3 | -29.3 | -29.3 | 0 | 29 |
| REF NO. | IC5400 | | | | | | | | | | | | | | | | | | | |
| MODE | 21 | 22 | 23 | | | | | | | | | | | | | | | | | |
| CD PLAY | -0.1 | -0.1 | 2.5 | | | | | | | | | | | | | | | | | |
| STANDBY | -0.1 | -0.1 | 2.5 | | | | | | | | | | | | | | | | | |
| REF NO. | IC5500 | | | | | | | | | | | | | | | | | | | |
| MODE | 1 | 2 | 3 | 4 | 5 | 6 | 7 | 8 | 9 | 10 | 11 | 12 | 13 | 14 | | | | | | |
| CD PLAY | 0 | 5.2 | 5 | 0 | 2.7 | 2.2 | 0 | 2.5 | 2.6 | 2.6 | 2.5 | 0 | 5.2 | 5.2 | | | | | | |
| STANDBY | 0 | 5.2 | 5 | 0 | 2.7 | 2.2 | 0 | 2.5 | 2.6 | 2.6 | 2.5 | 0 | 5.2 | 5.2 | | | | | | |
| REF NO. | IC5501 | | | | | | | | | | | | | | | | | | | |
| MODE | 1 | 2 | 3 | 4 | 5 | 6 | 7 | 8 | 9 | 10 | 11 | 12 | 13 | 14 | | | | | | |
| CD PLAY | 2.5 | 2.6 | 2.5 | 0 | 2.6 | 0 | 0 | 0 | 0 | 0 | 0 | 0 | 5.2 | 5.2 | | | | | | |
| STANDBY | 2.5 | 2.6 | 2.5 | 0 | 2.6 | 0 | 0 | 0 | 0 | 0 | 0 | 0 | 5.2 | 5.2 | | | | | | |
| REF NO. | Q5101 | | | | Q5102 | | | | Q5601 | | | | Q5602 | | | | Q5603 | | | |
| MODE | E | C | B | | E | C | B | | E | C | B | | E | C | B | | E | C | B | |
| CD PLAY | 0 | 5.2 | 0 | | 0 | 5.2 | 0 | | 0 | 0 | 0.7 | | 0 | 0 | 0.7 | | 5.2 | 5.1 | 4.4 | |
| STANDBY | 0 | 5.2 | 0 | | 0 | 5.2 | 0 | | 0 | 0 | 0.7 | | 0 | 0 | 0.7 | | 5.2 | 5.1 | 4.5 | |
| REF NO. | Q5604 | | | | Q5640 | | | | Q5641 | | | | Q5642 | | | | Q5644 | | | |
| MODE | E | C | B | | E | C | B | | E | C | B | | E | C | B | | E | C | B | |
| CD PLAY | 0 | 0 | 0.7 | | 0 | 0.7 | 0 | | 0 | 0 | 0.7 | | 0 | 0.7 | 0 | | 0 | 0.7 | 0 | |
| STANDBY | 0 | 0 | 0.7 | | 0 | 0.7 | 0 | | 0 | 0 | 0.7 | | 0 | 0.7 | 0 | | 0 | 0.7 | 0 | |

**SA-BX500EB/EE/EG D-AMP A (4CH) P.C.B.**

# 8.4. D-Amp B (3CH) P.C.B.

| REF NO. | IC5000 | | | | | | | | | | | | | | | | | | | |
|---|---|---|---|---|---|---|---|---|---|---|---|---|---|---|---|---|---|---|---|---|
| MODE | 1 | 2 | 3 | 4 | 5 | 6 | 7 | 8 | 9 | 10 | 11 | 12 | 13 | 14 | 15 | 16 | 17 | 18 | 19 | 20 |
| CD PLAY | 2.5 | 0.1 | 0.1 | 2.9 | 0 | -29.3 | -29.3 | 29.3 | 11 | -0.1 | -29.5 | -17.3 | -29.5 | -0.1 | 11 | 29.3 | -29.3 | -29.3 | 0 | 29 |
| STANDBY | 2.5 | 0.1 | 0.1 | 2.9 | 0 | -29.3 | -21 | 29.3 | 11 | -0.1 | -29.5 | -17.3 | -29.5 | -0.1 | 11 | 29.3 | -29.3 | -29.2 | 0 | 29 |
| REF NO. | IC5000 | | | | | | | | | | | | | | | | | | | |
| MODE | 21 | 22 | 23 | | | | | | | | | | | | | | | | | |
| CD PLAY | -0.1 | -0.1 | 2.5 | | | | | | | | | | | | | | | | | |
| STANDBY | -0.1 | -0.1 | 2.5 | | | | | | | | | | | | | | | | | |
| REF NO. | IC5200 | | | | | | | | | | | | | | | | | | | |
| MODE | 1 | 2 | 3 | 4 | 5 | 6 | 7 | 8 | 9 | 10 | 11 | 12 | 13 | 14 | 15 | 16 | 17 | 18 | 19 | 20 |
| CD PLAY | 2.5 | -0.1 | -0.1 | 29 | 0 | -29.3 | -29.3 | 29.3 | 11 | -0.1 | -29.5 | -17.3 | -29.5 | -0.1 | 11 | 29.3 | -29.3 | -29.3 | 0 | 29 |
| STANDBY | 2.5 | -0.1 | -0.1 | 29 | 0 | -29.3 | -29.3 | 29.3 | 11 | -0.1 | -29.5 | -17.3 | -29.5 | -0.1 | 11 | 29.3 | -29.3 | -29.3 | 0 | 29 |
| REF NO. | IC5200 | | | | | | | | | | | | | | | | | | | |
| MODE | 21 | 22 | 23 | | | | | | | | | | | | | | | | | |
| CD PLAY | -0.1 | -0.1 | 2.5 | | | | | | | | | | | | | | | | | |
| STANDBY | -0.1 | -0.1 | 2.5 | | | | | | | | | | | | | | | | | |
| REF NO. | IC5300 | | | | | | | | | | | | | | | | | | | |
| MODE | 1 | 2 | 3 | 4 | 5 | 6 | 7 | 8 | 9 | 10 | 11 | 12 | 13 | 14 | 15 | 16 | 17 | 18 | 19 | 20 |
| CD PLAY | 2.5 | -0.1 | -0.1 | 29 | 0 | -29.3 | -29.3 | 29.3 | 11 | -0.1 | -29.5 | -17.3 | -29.5 | -0.1 | 11 | 29.3 | -29.3 | -29.3 | 0 | 29 |
| STANDBY | 2.5 | -0.1 | -0.1 | 29 | 0 | -29.3 | -29.3 | 29.3 | 11 | -0.1 | -29.5 | -17.3 | -29.5 | -0.1 | 11 | 29.3 | -29.3 | -29.3 | 0 | 29 |
| REF NO. | IC5300 | | | | | | | | | | | | | | | | | | | |
| MODE | 21 | 22 | 23 | | | | | | | | | | | | | | | | | |
| CD PLAY | -0.1 | -0.1 | 2.5 | | | | | | | | | | | | | | | | | |
| STANDBY | -0.1 | -0.1 | 2.5 | | | | | | | | | | | | | | | | | |
| REF NO. | IC5500 | | | | | | | | | | | | | | | | | | | |
| MODE | 1 | 2 | 3 | 4 | 5 | 6 | 7 | 8 | 9 | 10 | 11 | 12 | 13 | 14 | | | | | | |
| CD PLAY | 0 | 5.2 | 5 | 0 | 2.7 | 2.2 | 0 | 2.5 | 2.6 | 2.6 | 2.5 | 0 | 5.2 | 5.2 | | | | | | |
| STANDBY | 0 | 5.2 | 5 | 0 | 2.7 | 2.2 | 0 | 2.5 | 2.6 | 2.6 | 2.5 | 0 | 5.2 | 5.2 | | | | | | |
| REF NO. | IC5501 | | | | | | | | | | | | | | | | | | | |
| MODE | 1 | 2 | 3 | 4 | 5 | 6 | 7 | 8 | 9 | 10 | 11 | 12 | 13 | 14 | | | | | | |
| CD PLAY | 2.5 | 2.6 | 2.5 | 0 | 2.6 | 0 | 0 | 0 | 0 | 0 | 0 | 0 | 5.2 | 5.2 | | | | | | |
| STANDBY | 2.5 | 2.6 | 2.5 | 0 | 2.6 | 0 | 0 | 0 | 0 | 0 | 0 | 0 | 5.2 | 5.2 | | | | | | |
| REF NO. | Q5101 | | | | Q5102 | | | | Q5601 | | | | Q5602 | | | | Q5603 | | | |
| MODE | E | C | B | | E | C | B | | E | C | B | | E | C | B | | E | C | B | |
| CD PLAY | 0 | 5.2 | 0 | | 0 | 5.2 | 0 | | 0 | 0 | 0.7 | | 0 | 0 | 0.7 | | 5.2 | 5.1 | 4.4 | |
| STANDBY | 0 | 5.2 | 0 | | 0 | 5.2 | 0 | | 0 | 0 | 0.7 | | 0 | 0 | 0.7 | | 5.2 | 5.1 | 4.5 | |
| REF NO. | Q5604 | | | | | | | | | | | | | | | | | | | |
| MODE | E | C | B | | | | | | | | | | | | | | | | | |
| CD PLAY | 0 | 0 | 0.7 | | | | | | | | | | | | | | | | | |
| STANDBY | 0 | 0 | 0.7 | | | | | | | | | | | | | | | | | |

**SA-BX500EB/EE/EG D-AMP B (3CH) P.C.B.**

# 8.5. Main P.C.B.

| REF NO. | IC101 | | | | | | | | | | | | | | | | | | | |
|---|---|---|---|---|---|---|---|---|---|---|---|---|---|---|---|---|---|---|---|---|
| MODE | 1 | 2 | 3 | 4 | 5 | | | | | | | | | | | | | | | |
| CD PLAY | 7.7 | 7.7 | 0 | 2.1 | 1 | | | | | | | | | | | | | | | |
| STANDBY | 7.7 | 7.7 | 0 | 2.1 | 1 | | | | | | | | | | | | | | | |
| REF NO. | IC201 | | | | | | | | | | | | | | | | | | | |
| MODE | 1 | 2 | 3 | 4 | 5 | 6 | 7 | 8 | 9 | 10 | 11 | 12 | 13 | 14 | 15 | 16 | | | | |
| CD PLAY | 0 | 3.3 | 1.2 | 3.3 | 1.0 | 0 | 0 | 0 | 0 | 0 | 0 | 0 | 0 | 1.1 | 2.9 | 3.3 | | | | |
| STANDBY | 0 | 3.3 | 1.2 | 3.3 | 1.1 | 0 | 0 | 0 | 0 | 0 | 0 | 0 | 0 | 0.9 | 2.8 | 3.3 | | | | |
| REF NO. | IC1001 | | | | | | | | | | | | | | | | | | | |
| MODE | 1 | 2 | 3 | 4 | 5 | 6 | 7 | 8 | | | | | | | | | | | | |
| CD PLAY | 0 | 5.1 | 5.1 | 3.3 | 3.3 | 3.3 | 3.3 | 3.3 | | | | | | | | | | | | |
| STANDBY | 0 | 5.1 | 5.1 | 3.3 | 3.3 | 3.3 | 3.3 | 3.3 | | | | | | | | | | | | |
| REF NO. | IC1102 | | | | | | | | | | | | | | | | | | | |
| MODE | 1 | 2 | 3 | 4 | 5 | 6 | 7 | 8 | | | | | | | | | | | | |
| CD PLAY | 0 | 0 | 0 | -7.5 | 0 | 0 | 0 | 7.7 | | | | | | | | | | | | |
| STANDBY | 0 | 0 | 0 | -7.5 | 0 | 0 | 0 | 7.7 | | | | | | | | | | | | |
| REF NO. | IC4001 | | | | | | | | | | | | | | | | | | | |
| MODE | 1 | 2 | 3 | 4 | 5 | 6 | 7 | 8 | 9 | 10 | 11 | 12 | 13 | 14 | 15 | 16 | 17 | 18 | 19 | 20 |
| CD PLAY | 0 | 0 | 0 | 0 | 0 | 0 | 0 | 0 | -7.5 | 0 | 0 | 0 | 7.6 | 0 | 0 | 0 | 0 | 0 | 0 | 0 |
| STANDBY | 0 | 0 | 0 | 0 | 0 | 0 | 0 | 0 | -7.5 | 0 | 0 | 0 | 7.6 | 0 | 0 | 0 | 0 | 0 | 0 | 0 |
| REF NO. | | | | | | | | | | | | | | | | | | | | |
| MODE | 21 | 22 | 23 | 24 | 25 | 26 | 27 | 28 | 29 | 30 | 31 | 32 | 33 | 34 | 35 | 36 | 37 | 38 | 39 | 40 |
| CD PLAY | 0 | 0 | 0 | 0 | 0 | 0 | 0 | 0 | 0 | 0 | 0 | 0 | 0 | 0 | 0 | 0 | 0 | 0 | 0 | 0 |
| STANDBY | 0 | 0 | 0 | 0 | 0 | 0 | 0 | 0 | 0 | 0 | 0 | 0 | 0 | 0 | 0 | 0 | 0 | 0 | 0 | 0 |
| REF NO. | | | | | | | | | | | | | | | | | | | | |
| MODE | 41 | 42 | 43 | 44 | 45 | 46 | 47 | 48 | 49 | 50 | 51 | 52 | 53 | 54 | 55 | 56 | 57 | 58 | 59 | 60 |
| CD PLAY | 0 | 0 | 0 | 0 | 0 | 0 | 0 | 0 | 0 | 0 | 0 | 0 | 0 | 0 | 0 | 0 | 0 | 0 | 0 | 0 |
| STANDBY | 0 | 0 | 0 | 0 | 0 | 0 | 0 | 0 | 0 | 0 | 0 | 0 | 0 | 0 | 0 | 0 | 0 | 0 | 0 | 0 |
| REF NO. | | | | | | | | | | | | | | | | | | | | |
| MODE | 61 | 62 | 63 | 64 | 65 | 66 | 67 | 68 | 69 | 70 | 71 | 72 | 73 | 74 | 75 | 76 | 77 | 78 | 79 | 80 |
| CD PLAY | 0 | 0 | 0 | 0 | 0 | 0 | 0 | 0 | 0 | 0 | 0 | 0 | 0 | 0 | 0 | 0 | 0 | 0 | 0 | 0 |
| STANDBY | 0 | 0 | 0 | 0 | 0 | 0 | 0 | 0 | 0 | 0 | 0 | 0 | 0 | 0 | 0 | 0 | 0 | 0 | 0 | 0 |
| REF NO. | IC4005 | | | | | | | | | | | | | | | | | | | |
| MODE | 1 | 2 | 3 | 4 | 5 | 6 | 7 | 8 | | | | | | | | | | | | |
| CD PLAY | 0 | 0 | 0 | -7.2 | 0 | 0 | 0 | 7.5 | | | | | | | | | | | | |
| STANDBY | 0 | 0 | 0 | -7.2 | 0 | 0 | 0 | 7.5 | | | | | | | | | | | | |
| REF NO. | IC4006 | | | | | | | | | | | | | | | | | | | |
| MODE | 1 | 2 | 3 | 4 | 5 | 6 | 7 | 8 | | | | | | | | | | | | |
| CD PLAY | 0 | 0 | 0 | -7.2 | 0 | 0 | 0 | 7.5 | | | | | | | | | | | | |
| STANDBY | 0 | 0 | 0 | -7.2 | 0 | 0 | 0 | 7.5 | | | | | | | | | | | | |
| REF NO. | IC4007 | | | | | | | | | | | | | | | | | | | |
| MODE | 1 | 2 | 3 | 4 | 5 | 6 | 7 | 8 | | | | | | | | | | | | |
| CD PLAY | 0 | 0 | 0 | -7.5 | 0 | 0 | 0 | 7.7 | | | | | | | | | | | | |
| STANDBY | 0 | 0 | 0 | -7.5 | 0 | 0 | 0 | 7.7 | | | | | | | | | | | | |
| REF NO. | IC4008 | | | | | | | | | | | | | | | | | | | |
| MODE | 1 | 2 | 3 | 4 | 5 | 6 | 7 | 8 | | | | | | | | | | | | |
| CD PLAY | 0 | 0 | 0 | -7.5 | 0 | 0 | 0 | 7.7 | | | | | | | | | | | | |
| STANDBY | 0 | 0 | 0 | -7.5 | 0 | 0 | 0 | 7.7 | | | | | | | | | | | | |
| REF NO. | IC4009 | | | | | | | | | | | | | | | | | | | |
| MODE | 1 | 2 | 3 | 4 | 5 | 6 | 7 | 8 | | | | | | | | | | | | |
| CD PLAY | 0 | 0 | 0 | -2.1 | 0 | 0 | 0 | 2.1 | | | | | | | | | | | | |
| STANDBY | 0 | 0 | 0 | -2.1 | 0 | 0 | 0 | 2.1 | | | | | | | | | | | | |
| REF NO. | IC4010 | | | | | | | | | | | | | | | | | | | |
| MODE | 1 | 2 | 3 | 4 | 5 | 6 | 7 | 8 | | | | | | | | | | | | |
| CD PLAY | 0 | 0 | 0 | -7.5 | 0 | 0 | 0 | 7.7 | | | | | | | | | | | | |
| STANDBY | 0 | 0 | 0 | -7.5 | 0 | 0 | 0 | 7.7 | | | | | | | | | | | | |
| REF NO. | IC4011 | | | | | | | | | | | | | | | | | | | |
| MODE | 1 | 2 | 3 | 4 | 5 | 6 | 7 | 8 | | | | | | | | | | | | |
| CD PLAY | 0 | 0 | 0 | -2.1 | 0 | 0 | 0 | 2.1 | | | | | | | | | | | | |
| STANDBY | 0 | 0 | 0 | -2.1 | 0 | 0 | 0 | 2.1 | | | | | | | | | | | | |
| REF NO. | IC4012 | | | | | | | | | | | | | | | | | | | |
| MODE | 1 | 2 | 3 | 4 | 5 | 6 | 7 | 8 | | | | | | | | | | | | |
| CD PLAY | 0 | 0 | 0 | -2.1 | 0 | 0 | 0 | 2.1 | | | | | | | | | | | | |
| STANDBY | 0 | 0 | 0 | -2.1 | 0 | 0 | 0 | 2.1 | | | | | | | | | | | | |
| REF NO. | IC4014 | | | | | | | | | | | | | | | | | | | |
| MODE | 1 | 2 | 3 | 4 | 5 | 6 | 7 | 8 | | | | | | | | | | | | |
| CD PLAY | 0 | 0 | 0 | -7.2 | 0 | 0 | 0 | 7.5 | | | | | | | | | | | | |
| STANDBY | 0 | 0 | 0 | -7.2 | 0 | 0 | 0 | 7.5 | | | | | | | | | | | | |
| REF NO. | IC4015 | | | | | | | | | | | | | | | | | | | |
| MODE | 1 | 2 | 3 | 4 | 5 | 6 | 7 | 8 | | | | | | | | | | | | |
| CD PLAY | 0 | 0 | 0 | -7.5 | 0 | 0 | 0 | 7.7 | | | | | | | | | | | | |
| STANDBY | 0 | 0 | 0 | -7.5 | 0 | 0 | 0 | 7.7 | | | | | | | | | | | | |
| REF NO. | IC4050 | | | | | | | | | | | | | | | | | | | |
| MODE | 1 | 2 | 3 | 4 | 5 | | | | | | | | | | | | | | | |
| CD PLAY | 7.7 | 7.7 | 0 | 2.1 | 1 | | | | | | | | | | | | | | | |
| STANDBY | 7.7 | 7.7 | 0 | 2.1 | 1 | | | | | | | | | | | | | | | |
| REF NO. | IC4051 | | | | | | | | | | | | | | | | | | | |
| MODE | 1 | 2 | 3 | 4 | 5 | 6 | 7 | 8 | | | | | | | | | | | | |
| CD PLAY | 0 | 0 | 0 | -7.5 | 0 | 0 | 0 | 7.7 | | | | | | | | | | | | |
| STANDBY | 0 | 0 | 0 | -7.5 | 0 | 0 | 0 | 7.7 | | | | | | | | | | | | |

| REF NO. | IC4261 | | | | | | | | | | | | | | | | | | | |
|---|---|---|---|---|---|---|---|---|---|---|---|---|---|---|---|---|---|---|---|---|
| MODE | 1 | 2 | 3 | 4 | 5 | 6 | 7 | 8 | | | | | | | | | | | | |
| CD PLAY | 2.6 | 2.6 | 2.5 | 0 | 2.5 | 2.6 | 2.6 | 5.1 | | | | | | | | | | | | |
| STANDBY | 2.6 | 2.6 | 2.5 | 0 | 2.5 | 2.6 | 2.6 | 5.1 | | | | | | | | | | | | |
| REF NO. | IC4301 | | | | | | | | | | | | | | | | | | | |
| MODE | 1 | 2 | 3 | 4 | 5 | 6 | 7 | 8 | | | | | | | | | | | | |
| CD PLAY | 0.1 | 0 | 0 | -7.6 | 0 | 0 | 0.1 | 7.7 | | | | | | | | | | | | |
| STANDBY | 0.1 | 0 | 0 | -7.6 | 0 | 0 | 0.1 | 7.7 | | | | | | | | | | | | |
| REF NO. | IC4303 | | | | | | | | | | | | | | | | | | | |
| MODE | 1 | 2 | 3 | 4 | 5 | 6 | 7 | 8 | | | | | | | | | | | | |
| CD PLAY | -6.2 | 1.4 | 0 | -7.6 | 0 | 1.4 | -6.2 | 5.1 | | | | | | | | | | | | |
| STANDBY | -6.2 | 1.4 | 0 | -7.6 | 0 | 1.4 | -6.2 | 5.1 | | | | | | | | | | | | |
| REF NO. | IC4304 | | | | | | | | | | | | | | | | | | | |
| MODE | 1 | 2 | 3 | 4 | 5 | 6 | 7 | 8 | | | | | | | | | | | | |
| CD PLAY | -6.2 | 1.4 | 0 | -7.6 | 0 | 1.4 | -6.2 | 5.1 | | | | | | | | | | | | |
| STANDBY | -6.2 | 1.4 | 0 | -7.6 | 0 | 1.4 | -6.2 | 5.1 | | | | | | | | | | | | |
| REF NO. | IC4305 | | | | | | | | | | | | | | | | | | | |
| MODE | 1 | 2 | 3 | 4 | 5 | 6 | 7 | 8 | | | | | | | | | | | | |
| CD PLAY | 0 | 0 | 0 | -7.5 | 0 | 0 | 0 | 7.7 | | | | | | | | | | | | |
| STANDBY | 0 | 0 | 0 | -7.5 | 0 | 0 | 0 | 7.7 | | | | | | | | | | | | |
| REF NO. | IC4404 | | | | | | | | | | | | | | | | | | | |
| MODE | 1 | 2 | 3 | 4 | 5 | 6 | 7 | 8 | | | | | | | | | | | | |
| CD PLAY | 0 | 0 | 0 | -7.5 | 0 | 0 | 0 | 7.7 | | | | | | | | | | | | |
| STANDBY | 0 | 0 | 0 | -7.5 | 0 | 0 | 0 | 7.7 | | | | | | | | | | | | |
| REF NO. | IC4405 | | | | | | | | | | | | | | | | | | | |
| MODE | 1 | 2 | 3 | 4 | 5 | 6 | 7 | 8 | 9 | 10 | 11 | 12 | 13 | 14 | | | | | | |
| CD PLAY | 0 | 0 | 0 | 0 | -7.5 | -7.5 | -7.5 | 0 | 0 | 0 | 0 | 7.7 | 7.7 | 7.7 | | | | | | |
| STANDBY | 0 | 0 | 0 | 0 | -7.5 | -7.5 | -7.5 | 0 | 0 | 0 | 0 | 7.7 | 7.7 | 7.7 | | | | | | |
| REF NO. | IC7002 | | | | | | | | | | | | | | | | | | | |
| MODE | 1 | 2 | 3 | | | | | | | | | | | | | | | | | |
| CD PLAY | 3.3 | 0 | 4.9 | | | | | | | | | | | | | | | | | |
| STANDBY | 3.3 | 0 | 4.9 | | | | | | | | | | | | | | | | | |
| REF NO. | IC7003 | | | | | | | | | | | | | | | | | | | |
| MODE | 1 | 2 | 3 | | | | | | | | | | | | | | | | | |
| CD PLAY | 3.3 | 0 | 4.9 | | | | | | | | | | | | | | | | | |
| STANDBY | 3.3 | 0 | 4.9 | | | | | | | | | | | | | | | | | |
| REF NO. | IC7004 | | | | | | | | | | | | | | | | | | | |
| MODE | 1 | 2 | 3 | 4 | 5 | | | | | | | | | | | | | | | |
| CD PLAY | 7.7 | 7.7 | 0 | 2.1 | 1 | | | | | | | | | | | | | | | |
| STANDBY | 7.7 | 7.7 | 0 | 2.1 | 1 | | | | | | | | | | | | | | | |
| REF NO. | IC7022 | | | | | | | | | | | | | | | | | | | |
| MODE | 1 | 2 | 3 | 4 | 5 | | | | | | | | | | | | | | | |
| CD PLAY | 7.7 | 7.7 | 0 | 2.1 | 1 | | | | | | | | | | | | | | | |
| STANDBY | 7.7 | 7.7 | 0 | 2.1 | 1 | | | | | | | | | | | | | | | |
| REF NO. | IC7722 | | | | | | | | | | | | | | | | | | | |
| MODE | 1 | 2 | 3 | 4 | 5 | | | | | | | | | | | | | | | |
| CD PLAY | 5.7 | 0 | 3.3 | - | 5.3 | | | | | | | | | | | | | | | |
| STANDBY | 5.7 | 0 | 3.3 | - | 5.3 | | | | | | | | | | | | | | | |
| REF NO. | IC7723 | | | | | | | | | | | | | | | | | | | |
| MODE | 1 | 2 | 3 | 4 | 5 | | | | | | | | | | | | | | | |
| CD PLAY | 5.7 | 0 | 3.3 | - | 5.3 | | | | | | | | | | | | | | | |
| STANDBY | 5.7 | 0 | 3.3 | - | 5.3 | | | | | | | | | | | | | | | |
| REF NO. | IC7704 | | | | | | | | | | | | | | | | | | | |
| MODE | 1 | 2 | 3 | 4 | 5 | | | | | | | | | | | | | | | |
| CD PLAY | 7.7 | 7.7 | 0 | 2.1 | 1 | | | | | | | | | | | | | | | |
| STANDBY | 7.7 | 7.7 | 0 | 2.1 | 1 | | | | | | | | | | | | | | | |
| REF NO. | IC8001 | | | | | | | | | | | | | | | | | | | |
| MODE | 1 | 2 | 3 | 4 | 5 | 6 | 7 | 8 | 9 | 10 | 11 | 12 | 13 | 14 | 15 | 16 | 17 | 18 | 19 | 20 |
| CD PLAY | 3.2 | 0 | 0 | 3.3 | 3.3 | 3.3 | 3.3 | 3.3 | 3.3 | 0 | 0 | 1.6 | 1.6 | 0 | 1.3 | 1.7 | 3.3 | 1.8 | 3.3 | 3.3 |
| STANDBY | 3.2 | 0 | 0 | 3.3 | 3.3 | 3.3 | 3.3 | 3.3 | 3.3 | 0 | 0 | 1.6 | 1.6 | 0 | 1.3 | 1.7 | 3.3 | 1.8 | 3.3 | 3.3 |
| REF NO. | IC8001 | | | | | | | | | | | | | | | | | | | |
| MODE | 21 | 22 | 23 | 24 | 25 | 26 | 27 | 28 | 29 | 30 | 31 | 32 | 33 | 34 | 35 | 36 | 37 | 38 | 39 | 40 |
| CD PLAY | 3.3 | 3.3 | 0 | 3.3 | 1 | 3.3 | 3.3 | 0 | 0 | 3.3 | 0.1 | 3.3 | 0.1 | 3.2 | 1.4 | 0 | 1.8 | 3.3 | 0 | 0 |
| STANDBY | 3.3 | 3.3 | 0 | 3.3 | 1 | 3.3 | 3.3 | 0 | 0 | 3.3 | 0.1 | 3.3 | 0.1 | 3.2 | 1.4 | 0 | 1.8 | 3.3 | 0 | 0 |
| REF NO. | IC8001 | | | | | | | | | | | | | | | | | | | |
| MODE | 41 | 42 | 43 | 44 | 45 | 46 | 47 | 48 | 49 | 50 | 51 | 52 | 53 | 54 | 55 | 56 | 57 | 58 | 59 | 60 |
| CD PLAY | 3.3 | 0 | 0 | 3.3 | 3.3 | 3.3 | 3.3 | 3.3 | 3.3 | 3.2 | 3.3 | 2.12 | 0 | 3.3 | 0 | 0 | 0 | 3.3 | 0 | 0 |
| STANDBY | 3.3 | 0 | 0 | 3.3 | 3.3 | 3.3 | 3.3 | 3.3 | 3.3 | 3.2 | 3.3 | 2.12 | 0 | 3.3 | 0 | 0 | 0 | 3.3 | 0 | 0 |
| REF NO. | IC8001 | | | | | | | | | | | | | | | | | | | |
| MODE | 61 | 62 | 63 | 64 | 65 | 66 | 67 | 68 | 69 | 70 | 71 | 72 | 73 | 74 | 75 | 76 | 77 | 78 | 79 | 80 |
| CD PLAY | 3.3 | 0 | 0 | 3.3 | 3.3 | 3.3 | 3.3 | 3.3 | 0 | 3.3 | 3.3 | 1.2 | 1 | 0 | 1.8 | 3.3 | 3.3 | 0 | 3.3 | 0.5 |
| STANDBY | 3.3 | 0 | 0 | 3.3 | 3.3 | 3.3 | 3.3 | 3.3 | 0 | 3.3 | 3.3 | 1.2 | 1 | 0 | 1.8 | 3.3 | 3.3 | 0 | 3.3 | 0.5 |
| REF NO. | IC8001 | | | | | | | | | | | | | | | | | | | |
| MODE | 81 | 82 | 83 | 84 | 85 | 86 | 87 | 88 | 89 | 90 | 91 | 92 | 93 | 94 | 95 | 96 | 97 | 98 | 99 | 100 |
| CD PLAY | 2 | 3.1 | 0.6 | 2.9 | 2 | 0.4 | 3.3 | 0 | 3.3 | 0 | 0 | 3.3 | 3.3 | 0 | 0 | 0.9 | 3.3 | 3.3 | 3.3 | 3.3 |
| STANDBY | 2 | 3.1 | 0.6 | 2.9 | 2 | 0.4 | 3.3 | 0 | 3.3 | 0 | 0 | 3.3 | 3.3 | 0 | 0 | 0.9 | 3.3 | 3.3 | 3.3 | 3.3 |
| REF NO. | IC8002 | | | | | | | | | | | | | | | | | | | |
| MODE | 1 | 2 | 3 | 4 | 5 | | | | | | | | | | | | | | | |
| CD PLAY | - | 0 | 0 | 3.3 | 3.3 | | | | | | | | | | | | | | | |
| STANDBY | - | 0 | 0 | 3.3 | 3.3 | | | | | | | | | | | | | | | |

| REF NO. | IC8003 | | | | | | | | | | | | | | | | | | | |
|---|---|---|---|---|---|---|---|---|---|---|---|---|---|---|---|---|---|---|---|---|
| MODE | 1 | 2 | 3 | 4 | 5 | 6 | 7 | 8 | | | | | | | | | | | | |
| CD PLAY | 0.1 | 0 | 0 | -7.6 | 0 | 0 | 0.1 | 7.7 | | | | | | | | | | | | |
| STANDBY | 0.1 | 0 | 0 | -7.6 | 0 | 0 | 0.1 | 7.7 | | | | | | | | | | | | |
| REF NO. | IC8004 | | | | | | | | | | | | | | | | | | | |
| MODE | 1 | 2 | 3 | 4 | 5 | 6 | 7 | 8 | 9 | 10 | 11 | 12 | 13 | 14 | 15 | 16 | 17 | 18 | 19 | 20 |
| CD PLAY | 0 | 3.3 | 0 | 0 | 3.3 | 0 | 3.3 | 0 | 3.3 | 3.3 | 0 | 3.2 | 3.3 | 3.3 | 0 | 0 | 3.3 | - | 3.3 | 0 |
| STANDBY | 0 | 3.3 | 0 | 0 | 3.3 | 0 | 3.3 | 0 | 3.3 | 3.3 | 0 | 3.2 | 3.3 | 3.3 | 0 | 0 | 3.3 | - | 3.3 | 0 |
| REF NO. | IC8004 | | | | | | | | | | | | | | | | | | | |
| MODE | 21 | 22 | 23 | 24 | 25 | 26 | 27 | 28 | 29 | 30 | | | | | | | | | | |
| CD PLAY | 0 | 0 | 3.3 | 0 | 3.3 | 3.3 | 0 | 0 | 3.3 | 3.3 | | | | | | | | | | |
| STANDBY | 0 | 0 | 3.3 | 0 | 3.3 | 3.3 | 0 | 0 | 3.3 | 3.3 | | | | | | | | | | |
| REF NO. | Q1102 | | | | Q1103 | | | | Q4001 | | | | | | | | | | | |
| MODE | E | C | B | | E | C | B | | 1 | 2 | 3 | 4 | 5 | 6 | | | | | | |
| CD PLAY | 3.2 | 3.2 | 2.5 | | 3.2 | 3.2 | 2.5 | | 0 | -7.2 | 0 | 0 | -7.2 | 0 | | | | | | |
| STANDBY | 3.2 | 3.2 | 2.5 | | 3.2 | 3.2 | 2.5 | | 0 | -7.2 | 0 | 0 | -7.2 | 0 | | | | | | |
| REF NO. | Q4008 | | | | | | | Q4009 | | | | | | | Q4010 | | | | | |
| MODE | 1 | 2 | 3 | 4 | 5 | 6 | | 1 | 2 | 3 | 4 | 5 | 6 | | 1 | 2 | 3 | 4 | 5 | 6 |
| CD PLAY | 0 | 0.6 | 0 | 0 | 0.6 | 0 | | 0 | -7.2 | 0 | 0 | -7.2 | 0 | | 0 | -7.2 | 0 | 0 | -7.2 | 0 |
| STANDBY | 0 | 0.6 | 0 | 0 | 0.6 | 0 | | 0 | -7.2 | 0 | 0 | -7.2 | 0 | | 0 | -7.2 | 0 | 0 | -7.2 | 0 |
| REF NO. | Q4011 | | | | | | | Q4012 | | | | | | | Q4014 | | | | | |
| MODE | 1 | 2 | 3 | 4 | 5 | 6 | | 1 | 2 | 3 | 4 | 5 | 6 | | 1 | 2 | 3 | 4 | 5 | 6 |
| CD PLAY | 0 | -7.2 | 0 | 0 | -1 | - | | 0 | -7.2 | 0 | 0 | -7.2 | 0 | | 0 | -7.2 | 0 | 0 | -7.2 | 0 |
| STANDBY | 0 | -7.2 | 0 | 0 | -1 | - | | 0 | -7.2 | 0 | 0 | -7.2 | 0 | | 0 | -7.2 | 0 | 0 | -7.2 | 0 |
| REF NO. | Q4301 | | | | | | | Q4302 | | | | | | | Q4304 | | | | | |
| MODE | 1 | 2 | 3 | 4 | 5 | 6 | | 1 | 2 | 3 | 4 | 5 | 6 | | 1 | 2 | 3 | 4 | 5 | 6 |
| CD PLAY | 0 | -7.2 | 0 | 0 | -7.2 | 0 | | 0 | -7.2 | 0 | 0 | -7.2 | 0 | | 0 | -7.2 | 0 | 0 | -7.2 | 0 |
| STANDBY | 0 | -7.2 | 0 | 0 | -7.2 | 0 | | 0 | -7.2 | 0 | 0 | -7.2 | 0 | | 0 | -7.2 | 0 | 0 | -7.2 | 0 |
| REF NO. | Q4305 | | | | | | | Q4404 | | | | | | | Q69831 | | | | | |
| MODE | 1 | 2 | 3 | 4 | 5 | 6 | | 1 | 2 | 3 | 4 | 5 | 6 | | E | C | B | | | |
| CD PLAY | 0 | -7.2 | 0 | 0 | -7.2 | 0 | | 0 | -7.2 | 0 | 0 | -7.2 | 0 | | -2.1 | -7.6 | -2.7 | | | |
| STANDBY | 0 | -7.2 | 0 | 0 | -7.2 | 0 | | 0 | -7.2 | 0 | 0 | -7.2 | 0 | | -2.1 | -7.6 | -2.7 | | | |
| REF NO. | Q7001 | | | | Q7004 | | | | Q7005 | | | | Q7006 | | | | Q7007 | | | |
| MODE | E | C | B | | E | C | B | | E | C | B | | E | C | B | | | C | B | |
| CD PLAY | -7.6 | -11 | -8.2 | | -7.6 | -11 | -8.2 | | 0 | -8.2 | -0.6 | | 7.7 | 11 | 8.3 | | 0 | 3.3 | 1.3 | |
| STANDBY | -7.6 | -11 | -8.2 | | -7.6 | -11 | -8.2 | | 0 | -8.2 | -0.6 | | 7.7 | 11 | 8.3 | | 0 | 3.3 | 1.3 | |
| REF NO. | QR1101 | | | | QR1102 | | | | QR4009 | | | | QR4010 | | | | QR4011 | | | |
| MODE | E | C | B | | E | C | B | | E | C | B | | E | C | B | | E | C | B | |
| CD PLAY | 0 | 0 | 3.2 | | 0 | 0 | 3.2 | | 3.3 | 3.3 | 0 | | 3.3 | -7.2 | 3.3 | | 3.3 | -7.2 | 3.3 | |
| STANDBY | 0 | 0 | 3.2 | | 0 | 0 | 3.2 | | 3.3 | 3.3 | 0 | | 3.3 | -7.2 | 3.3 | | 3.3 | -7.2 | 3.3 | |
| REF NO. | QR4012 | | | | QR4013 | | | | QR4014 | | | | QR4304 | | | | QR4305 | | | |
| MODE | E | C | B | | E | C | B | | E | C | B | | E | C | B | | E | C | B | |
| CD PLAY | 3.3 | 3.3 | 0 | | 3.3 | -7.2 | 3.3 | | 0 | 0 | 3.2 | | 3.3 | -7.2 | 3.3 | | 3.3 | -7.2 | 3.3 | |
| STANDBY | 3.3 | 3.3 | 0 | | 3.3 | -7.2 | 3.3 | | 0 | 0 | 3.2 | | 3.3 | -7.2 | 3.3 | | 3.3 | -7.2 | 3.3 | |
| REF NO. | QR4306 | | | | QR4401 | | | | QR4402 | | | | QR4403 | | | | QR7001 | | | |
| MODE | E | C | B | | E | C | B | | E | C | B | | E | C | B | | E | C | B | |
| CD PLAY | 0 | 3.3 | 0 | | 3.3 | 3.3 | 0 | | 3.3 | 3.3 | 0 | | 3.3 | 3.3 | 0 | | 0 | 3.3 | 0 | |
| STANDBY | 0 | 3.3 | 0 | | 3.3 | 3.3 | 0 | | 3.3 | 3.3 | 0 | | 3.3 | 3.3 | 0 | | 0 | 3.3 | 0 | |
| REF NO. | QR7105 | | | | QR7106 | | | | QR7109 | | | | QR8011 | | | | QR8012 | | | |
| MODE | E | C | B | | E | C | B | | E | C | B | | E | C | B | | E | C | B | |
| CD PLAY | 3.3 | 3.3 | 0 | | 0 | 3.3 | 0 | | 0 | 0 | 3.3 | | 3.3 | 3.3 | 0 | | 3.3 | 0 | 3.3 | |
| STANDBY | 3.3 | 3.3 | 0 | | 0 | 3.3 | 0 | | 0 | 0 | 3.3 | | 3.3 | 3.3 | 0 | | 3.3 | 0 | 3.3 | |
| REF NO. | QR8017 | | | | | | | | | | | | | | | | | | | |
| MODE | E | C | B | | | | | | | | | | | | | | | | | |
| CD PLAY | 3.3 | 3.3 | 0 | | | | | | | | | | | | | | | | | |
| STANDBY | 3.3 | 3.3 | 0 | | | | | | | | | | | | | | | | | |

**SA-BX500EB/EE/EG MAIN P.C.B.**

## 8.6. Panel P.C.B.

| REF NO. | IC501 | | | | | | | | | | | | | | | | | | | |
|---|---|---|---|---|---|---|---|---|---|---|---|---|---|---|---|---|---|---|---|---|
| MODE | 1 | 2 | 3 | 4 | 5 | 6 | 7 | 8 | 9 | 10 | 11 | 12 | 13 | 14 | 15 | 16 | 17 | 18 | 19 | 20 |
| CD PLAY | 0 | 0 | 0 | 0 | 2.0 | 1.3 | 0.1 | 0.1 | 3.3 | 1.3 | 1.3 | 0 | 3.3 | -25.3 | -22 | -23 | -23 | -19 | -21 | -16 |
| STANDBY | 0 | 0 | 0 | 0 | 1.9 | 1.3 | 0.1 | 0.1 | 3.3 | 1.3 | 1.3 | 0 | 3.3 | -25.4 | -22 | -23 | -23.1 | -20.8 | -23.1 | -13.9 |
| REF NO. | IC501 | | | | | | | | | | | | | | | | | | | |
| MODE | 21 | 22 | 23 | 24 | 25 | 26 | 27 | 28 | 29 | 30 | 31 | 32 | 33 | 34 | 35 | 36 | 37 | 38 | 39 | 40 |
| CD PLAY | -25.4 | -25.3 | -25.3 | -19 | -20.7 | -23.1 | -23.1 | -25.3 | -25.3 | -25.8 | -14 | -16.3 | -23.7 | -23.3 | -23.3 | -23.3 | -23.3 | -23.3 | -23.2 | -23.2 |
| STANDBY | -25.4 | -25.4 | -25.4 | -18.4 | -18.4 | -25.4 | -25.4 | -25.4 | -18.5 | -25.9 | -14 | -21 | -23.8 | -23.4 | -23.4 | -23.4 | -23.4 | -23.4 | -23.3 | -23.3 |
| REF NO. | IC501 | | | | | | | | | | | | | | | | | | | |
| MODE | 41 | 42 | 43 | 44 | | | | | | | | | | | | | | | | |
| CD PLAY | -23.2 | -23.3 | 3.3 | 0 | | | | | | | | | | | | | | | | |
| STANDBY | -23.3 | -23.2 | -3.3 | 0 | | | | | | | | | | | | | | | | |
| REF NO. | IC502 | | | | | | | | | | | | | | | | | | | |
| MODE | 1 | 2 | 3 | 4 | 5 | 6 | 7 | 8 | | | | | | | | | | | | |
| CD PLAY | 0 | 0 | 0 | -7.2 | 0 | 0 | 0 | 7.5 | | | | | | | | | | | | |
| STANDBY | 0 | 0 | 0 | -7.2 | 0 | 0 | 0 | 7.5 | | | | | | | | | | | | |
| REF NO. | Q501 | | | | | | | | | | | | | | | | | | | |
| MODE | 1 | 2 | 3 | 4 | 5 | 6 | | | | | | | | | | | | | | |
| CD PLAY | 0 | -7.2 | 0 | 0 | -7.2 | 0 | | | | | | | | | | | | | | |
| STANDBY | 0 | -7.2 | 0 | 0 | -7.2 | 0 | | | | | | | | | | | | | | |
| REF NO. | QR501 | | | | QR502 | | | | QR503 | | | | QR504 | | | | QR505 | | | |
| MODE | E | C | B | | E | C | B | | E | C | B | | E | C | B | | E | C | B | |
| CD PLAY | 0 | 4.8 | 0 | | 0 | 5.0 | 0 | | 0 | 5.0 | 0 | | 0 | 4.8 | 0 | | 0 | 5.0 | 0 | |
| STANDBY | 0 | 4.8 | 0 | | 0 | 5.0 | 0 | | 0 | 5.0 | 0 | | 0 | 4.8 | 0 | | 0 | 5.0 | 0 | |
| REF NO. | QR506 | | | | QR507 | | | | QR508 | | | | QR509 | | | | QR510 | | | |
| MODE | E | C | B | | E | C | B | | E | C | B | | E | C | B | | E | C | B | |
| CD PLAY | 0 | 4.8 | 0 | | 0 | 5.0 | 0 | | 0 | 5.0 | 0 | | 0 | 4.8 | 0 | | 0 | 5.0 | 0 | |
| STANDBY | 0 | 4.8 | 0 | | 0 | 5.0 | 0 | | 0 | 5.0 | 0 | | 0 | 4.8 | 0 | | 0 | 5.0 | 0 | |
| REF NO. | QR511 | | | | QR512 | | | | QR513 | | | | | | | | | | | |
| MODE | E | C | B | | E | C | B | | E | C | B | | | | | | | | | |
| CD PLAY | 0 | 4.8 | 0 | | 0 | 5.0 | 0 | | 0 | 5.0 | 0 | | | | | | | | | |
| STANDBY | 0 | 4.8 | 0 | | 0 | 5.0 | 0 | | 0 | 5.0 | 0 | | | | | | | | | |

**SA-BX500EB/EE/EG PANEL P.C.B.**

## 8.7. Digital, Speaker & Fan P.C.B.

| REF NO. | IC4401 | | | | | |
|---|---|---|---|---|---|---|
| MODE | 1 | 2 | 3 | 4 | 5 | 6 |
| CD PLAY | 0 | 1.2 | 4.9 | 2 | 0 | 1.9 |
| STANDBY | 0 | 1.2 | 4.9 | 2 | 0 | 1.9 |

**SA-BX500EB/EE/EG DIGITAL P.C.B.**

| REF NO. | Q4601 | | | | Q4602 | | | | Q4603 | | | | Q4604 | | |
|---|---|---|---|---|---|---|---|---|---|---|---|---|---|---|---|
| MODE | E | C | B | | E | C | B | | E | C | B | | E | C | B |
| CD PLAY | 0 | 0 | 0.7 | | 0 | 0 | 0.7 | | 0 | 10.9 | 0 | | 0 | 0.1 | 0.7 |
| STANDBY | 0 | 0 | 0.7 | | 0 | 0 | 0.7 | | 0 | 10.9 | 0 | | 0 | 0.1 | 0.7 |

**SA-BX500EB/EE/EG SPEAKER P.C.B.**

| REF NO. | QR5991 | | |
|---|---|---|---|
| MODE | E | C | B |
| CD PLAY | 0 | 3.3 | 0 |
| STANDBY | 0 | 3.3 | 0 |

**SA-BX500EB/EE/EG FAN P.C.B.**

## 8.8. Video P.C.B.

| REF NO. | IC1001 | | | | | | | | | | | | | | | | | | | |
|---|---|---|---|---|---|---|---|---|---|---|---|---|---|---|---|---|---|---|---|---|
| MODE | 1 | 2 | 3 | 4 | 5 | 6 | 7 | 8 | 9 | 10 | 11 | 12 | 13 | 14 | 15 | 16 | | | | |
| CD PLAY | 0 | 2.6 | 0 | 0 | 0 | 0 | 0 | -4.9 | 0 | 0 | 0 | 0 | 0 | 3.1 | 0 | 5 | | | | |
| STANDBY | 0 | 2.6 | 0 | 0 | 0 | 0 | 0 | -4.9 | 0 | 0 | 0 | 0 | 0 | 3.1 | 0 | 5 | | | | |
| REF NO. | IC1002 | | | | | | | | | | | | | | | | | | | |
| MODE | 1 | 2 | 3 | 4 | 5 | 6 | 7 | 8 | 9 | 10 | 11 | 12 | 13 | 14 | 15 | 16 | 17 | 18 | 19 | 20 |
| CD PLAY | 0 | 3.2 | 0 | 0 | 0 | 5 | 0 | 0 | 0 | 0 | 0 | 0 | 0 | 0 | 0 | -4.9 | 0 | -4.9 | 0 | 0 |
| STANDBY | 0 | 3.2 | 0 | 0 | 0 | 5 | 0 | 0 | 0 | 0 | 0 | 0 | 0 | 0 | 0 | -4.9 | 0 | -4.9 | 0 | 0 |
| REF NO. | IC1002 | | | | | | | | | | | | | | | | | | | |
| MODE | 21 | 22 | 23 | 24 | | | | | | | | | | | | | | | | |
| CD PLAY | 4.9 | 0 | 3.2 | 0 | | | | | | | | | | | | | | | | |
| STANDBY | 4.9 | 0 | 3.2 | 0 | | | | | | | | | | | | | | | | |
| REF NO. | IC1003 | | | | | | | | | | | | | | | | | | | |
| MODE | 1 | 2 | 3 | 4 | 5 | 6 | | | | | | | | | | | | | | |
| CD PLAY | 0 | 1.2 | 4.9 | 2 | 0 | 1.9 | | | | | | | | | | | | | | |
| STANDBY | 0 | 1.2 | 4.9 | 2 | 0 | 1.9 | | | | | | | | | | | | | | |
| REF NO. | Q1001 | | | | Q1002 | | | | Q1003 | | | | | | | | | | | |
| MODE | E | C | B | | E | C | B | | E | C | B | | | | | | | | | |
| CD PLAY | 4.9 | 7.6 | 5.6 | | -4.9 | -7.5 | -5.5 | | 0 | 3.2 | -1 | | | | | | | | | |
| STANDBY | 4.9 | 7.6 | 5.6 | | -4.9 | -7.5 | -5.5 | | 0 | 3.2 | -1 | | | | | | | | | |

**SA-BX500EB/EE/EG VIDEO P.C.B.**

## 8.9. S-Video P.C.B.

| REF NO. | IC1051 | | | | | | | | | | | | | | | | | | | |
|---|---|---|---|---|---|---|---|---|---|---|---|---|---|---|---|---|---|---|---|---|
| MODE | 1 | 2 | 3 | 4 | 5 | 6 | 7 | 8 | 9 | 10 | 11 | 12 | 13 | 14 | 15 | 16 | | | | |
| CD PLAY | 0 | 2.4 | 0 | 0 | 0 | 0 | 0 | -4.9 | 0 | 0 | 0 | 0 | 0 | 2.9 | 0 | 4.9 | | | | |
| STANDBY | 0 | 2.4 | 0 | 0 | 0 | 0 | 0 | -4.9 | 0 | 0 | 0 | 0 | 0 | 2.9 | 0 | 4.9 | | | | |
| REF NO. | IC1052 | | | | | | | | | | | | | | | | | | | |
| MODE | 1 | 2 | 3 | 4 | 5 | 6 | 7 | 8 | 9 | 10 | 11 | 12 | 13 | 14 | 15 | 16 | | | | |
| CD PLAY | 0 | 2.4 | 0 | 0 | 0 | 0 | 0 | -4.9 | 0 | 0 | 0 | 0 | 0 | 2.9 | 0 | 4.9 | | | | |
| STANDBY | 0 | 2.4 | 0 | 0 | 0 | 0 | 0 | -4.9 | 0 | 0 | 0 | 0 | 0 | 2.9 | 0 | 4.9 | | | | |
| REF NO. | IC1053 | | | | | | | | | | | | | | | | | | | |
| MODE | 1 | 2 | 3 | 4 | 5 | 6 | | | | | | | | | | | | | | |
| CD PLAY | 0 | 1.2 | 4.9 | 2 | 0 | 1.9 | | | | | | | | | | | | | | |
| STANDBY | 0 | 1.2 | 4.9 | 2 | 0 | 1.9 | | | | | | | | | | | | | | |
| REF NO. | IC1054 | | | | | | | | | | | | | | | | | | | |
| MODE | 1 | 2 | 3 | 4 | 5 | 6 | | | | | | | | | | | | | | |
| CD PLAY | 0 | 1.2 | 4.9 | 2 | 0 | 1.9 | | | | | | | | | | | | | | |
| STANDBY | 0 | 1.2 | 4.9 | 2 | 0 | 1.9 | | | | | | | | | | | | | | |

**SA-BX500EB/EE/EG S-VIDEO P.C.B.**

## 8.10. SMPS P.C.B.

| REF NO. | IC5701 | | | | | | | | | | | | | | | | | | | |
|---|---|---|---|---|---|---|---|---|---|---|---|---|---|---|---|---|---|---|---|---|
| MODE | 1 | 2 | 3 | 4 | 5 | 6 | 7 | | | | | | | | | | | | | |
| CD PLAY | 162 | 0 | 0 | 19.3 | 0.1 | 1.4 | 0.5 | | | | | | | | | | | | | |
| STANDBY | 162 | 0 | 0 | 19.3 | 0.1 | 1.4 | 0.5 | | | | | | | | | | | | | |
| REF NO. | IC5799 | | | | | | | | | | | | | | | | | | | |
| MODE | 1 | 2 | 3 | 4 | 5 | 6 | 7 | 8 | | | | | | | | | | | | |
| CD PLAY | 6.0 | 1.6 | 1.8 | 20.3 | 162.2 | - | 0 | 0 | | | | | | | | | | | | |
| STANDBY | 6.0 | 1.6 | 2.0 | 20.3 | 163.0 | - | 0 | 0 | | | | | | | | | | | | |
| REF NO. | IC5801 | | | | | | | | | | | | | | | | | | | |
| MODE | 1 | 2 | 3 | | | | | | | | | | | | | | | | | |
| CD PLAY | -2.2 | -29.5 | -26.8 | | | | | | | | | | | | | | | | | |
| STANDBY | -2.2 | -29.5 | -26.8 | | | | | | | | | | | | | | | | | |
| REF NO. | IC5899 | | | | | | | | | | | | | | | | | | | |
| MODE | 1 | 2 | 3 | | | | | | | | | | | | | | | | | |
| CD PLAY | 4.2 | 0 | 2.5 | | | | | | | | | | | | | | | | | |
| STANDBY | 4.2 | 0 | 2.5 | | | | | | | | | | | | | | | | | |
| REF NO. | Q5720 | | | | Q5721 | | | | Q5722 | | | | Q5802 | | | | Q5803 | | | |
| MODE | E | C | B | | E | C | B | | E | C | B | | E | C | B | | E | C | B | |
| CD PLAY | 5.9 | 6.5 | 5.6 | | 19.9 | 19.9 | 19.2 | | 0 | 17.0 | 0.1 | | -21.9 | -2.2 | -22 | | 0 | 5.8 | 0 | |
| STANDBY | 5.9 | 6.6 | 5.6 | | 19.9 | 19.9 | 19.2 | | 0 | 16.8 | 0.1 | | -21.8 | -2.2 | -22 | | 0 | 5.8 | 0 | |
| REF NO. | Q5860 | | | | Q5861 | | | | Q5862 | | | | QR5801 | | | | QR5810 | | | |
| MODE | E | C | B | | E | C | B | | E | C | B | | E | C | B | | E | C | B | |
| CD PLAY | 1.3 | 0 | 0.7 | | 0 | 0 | 0.7 | | 0 | 5.2 | 0 | | 0 | 5.0 | 0 | | 0 | 0.1 | 5 | |
| STANDBY | 1.3 | 0 | 0.7 | | 0 | 0 | 0.7 | | 0 | 5.2 | 0 | | 0 | 5.0 | 0 | | 0 | 0 | 5 | |
| REF NO. | Q5898 | | | | | | | | | | | | | | | | | | | |
| MODE | E | C | B | | | | | | | | | | | | | | | | | |
| CD PLAY | 0 | 3.2 | 0.5 | | | | | | | | | | | | | | | | | |
| STANDBY | 0 | 3.2 | 0.5 | | | | | | | | | | | | | | | | | |

**SA-BX500EB/EE/EG SMPS P.C.B.**

# 8.11. Waveform Chart

## 8.11.1. Waveform 1

| | | | |
|---|---|---|---|
| WF No. IC501-5 (PLAY)<br> <br>1.5Vp-p(2usec/div) | WF No. IC1001-1 (PLAY)<br> <br>2.6Vp-p(20usec/div) | WF No. IC1001-9 (PLAY)<br> <br>1.0Vp-p(20usec/div) | WF No. IC3201-1,2 (PLAY)<br> 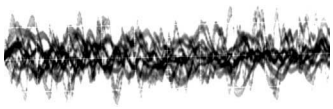 <br>0.9Vp-p(2msec/div) |
| WF No. IC3201-9 (PLAY)<br> 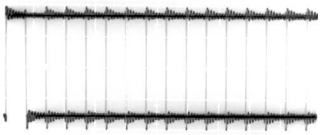 <br>6Vp-p(500nsec/div) | WF No. IC3404-25,28 (PLAY)<br> 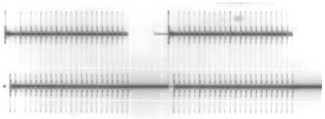 <br>4Vp-p(1usec/div) | WF No. IC3404-42 (PLAY)<br> 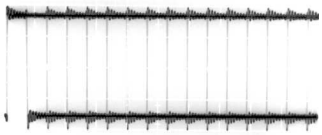 <br>3.4Vp-p(500nsec/div) | WF No. IC3501-3 (PLAY)<br> 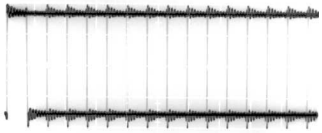 <br>3.4Vp-p(500nsec/div) |
| WF No. IC4001-28 (PLAY)<br> <br>0.3Vp-p(200usec/div) | WF No. IC4001-43,44 (PLAY)<br> 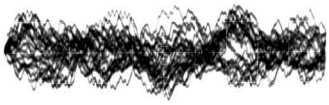 <br>3Vp-p(200usec/div) | WF No. IC4001-58,72 (PLAY)<br> <br>5.6Vp-p(200usec/div) | WF No. IC5000-1 (PLAY)<br> 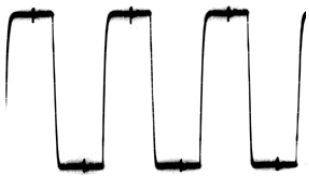 <br>5.6Vp-p(1usec/div) |
| WF No. IC5000-2 (PLAY)<br> <br>0.84Vp-p(200usec/div) | WF No. IC5000-10,14 (PLAY)<br> 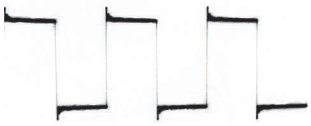 <br>80Vp-p(1usec/div) | WF No. IC5000-22 (PLAY)<br> <br>0.84Vp-p(200usec/div) | WF No. IC5200-1 (PLAY)<br> 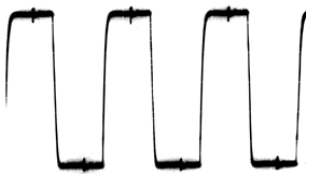 <br>5.6Vp-p(1usec/div) |
| WF No. IC5200-2 (PLAY)<br> <br>0.84Vp-p(200usec/div) | WF No. IC5200-10,14 (PLAY)<br> 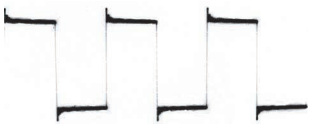 <br>80Vp-p(1usec/div) | WF No. IC5200-22 (PLAY)<br> <br>0.84Vp-p(200usec/div) | WF No. IC5300-1 (PLAY)<br> 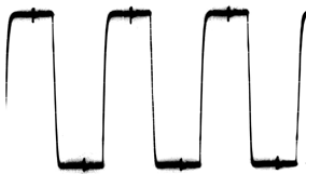 <br>5.6Vp-p(1usec/div) |
| WF No. IC5300-2 (PLAY)<br> <br>0.84Vp-p(200usec/div) | WF No. IC5300-10,14 (PLAY)<br> 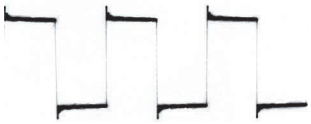 <br>80Vp-p(1usec/div) | WF No. IC5300-22 (PLAY)<br> <br>0.84Vp-p(200usec/div) | WF No. IC5400-1 (PLAY)<br> 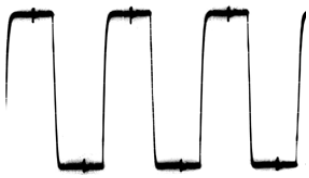 <br>5.6Vp-p(1usec/div) |

## 8.11.2. Waveform 2

| | | | |
|---|---|---|---|
| WF No. IC5400-2 (PLAY)<br> <br>0.84Vp-p(200usec/div) | WF No. IC5400-10,14 (PLAY)<br> 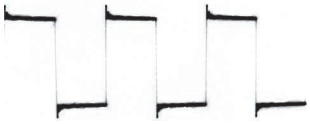 <br>80Vp-p(1usec/div) | WF No. IC5400-22 (PLAY)<br> <br>0.84Vp-p(200usec/div) | WF No. IC5500-5 (PLAY)<br> 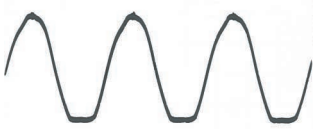 <br>7.2Vp-p(500nsec/div) |
| WF No. IC5500-8 (PLAY)<br> 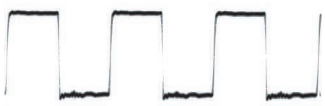 <br>5.6Vp-p(500usec/div) | WF No. IC5701-1 (PLAY)<br> 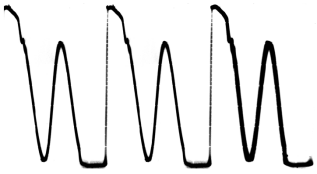 <br>400Vp-p(2usec/div) | WF No. IC5701-4,6 (PLAY)<br> <br>2Vp-p(5usec/div) | WF No. IC5799-2 (PLAY)<br> <br>2Vp-p(5usec/div) |
| WF No. IC5799-3 (PLAY)<br> 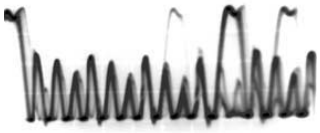 <br>9.6Vp-p(5usec/div) | WF No. IC5799-5 (PLAY)<br> <br>240Vp-p(50usec/div) | | |

# 9 Illustration of IC's, Transistors and Diodes

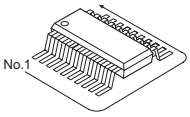


C0ABBB000189 (8p)
C0DBZYY00018 (8p)
C0ABBB000038 (8p)
C0DBZYE00002 (8p)
C0DBAKG00007 (8p)
C3EBEC000047 (8p)
C0JBAB000902 (14p)
C0JBAF000716 (14p)
C0FBAK000026 (16p)
C1AB00001931 (16p)
C1AB00002751 (16p)
C0JBAZ001466 (20p)
C1AB00002029 (24p)
C0JBAZ002843 (30p)
C0FBBK000044 (30p)
C3ABMG000238 (50p)
C0JBAZ002811 (20p)

C0JBAB000685
C1AB00001486
C1AB00002951

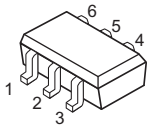


C2CBJH000147 (100p)

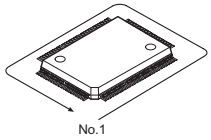


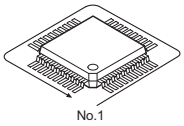


C0HBB0000057 (44p)
C1BB00000692 (48p)
C1AB00002977 (80p)
C1AB00002975 (100p)
C1AB00002989 (145p)
C2HBZY000027 (208p)
C2HBZY000028 (208p)
RFKWBX500EBK (100p)

RFKWFDE001AA (48p)
RFKWFDE002AA (48p)

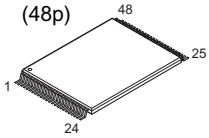


C1BA00000487 (23P)

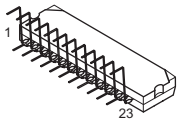


C0DBAYH00005
C0DBZHG00047
C0CBCAG00015
C0CBCBG00013

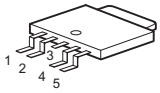


C0DBEKG00004

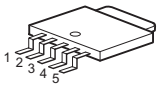


C0CBABC00117

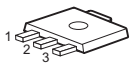


C0DABFC00002 (3p)
C0DAEMZ00001 (3p)

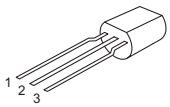


MIP4110MSSCF (8p)
C3EBFC000042 (8p)

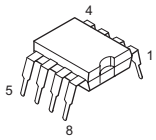


C0AABB000085
C0ABBB000125
C0JBAR000434
C0JBAS000008

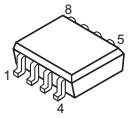


C0CBCDC00014
B1CFGD000002

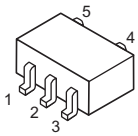


C0CBCBC00049
C0EBE0000242
C0EBE0000338

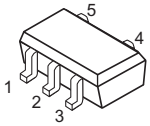


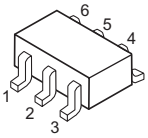


B1GFGCAA0001
B1HBCFA00003
C0JBAB000661
C1AB00001340

C5HACYY00003 (7p)

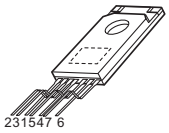


B1BABK000001

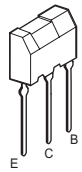


2SC3940ARA
2SB0621AHA
2SD0592AWA

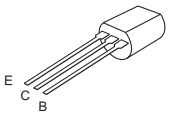


B1BACD000018
2SC3311ARA

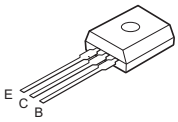


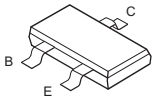


B1ADCF000001
UNR221400L
2SA207700L
2SC584500L
B1GBCFLL0037
B1ABCF000176
B1ADCE000012

B0EAKM000117
B0EAMM000057
B0HAMP000094
B0JAME000029

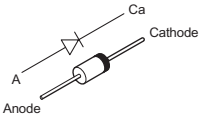


B0ACCK000005
B0BC8R100004
B0JCMD000010

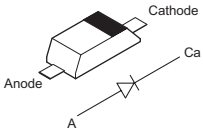


MA2J11100L
MA2J72800L
MA2YF8000L

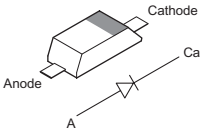


B0BC019A0007
B0BC035A0007
B0BC6R100010

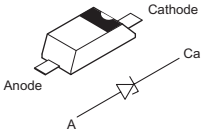


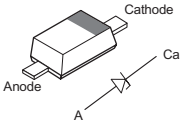


MAZ80510ML
MAZ80750ML
MAZ81200ML
MAZ82700LL
MAZ80560ML
MAZ80820ML
MAZ81800ML
MAZ802400L

MAZ803300L
MAZ80680ML
MAZ81000HL
MAZ81300HL
MAZ83000HL

B0HCMM000019
B0ECKM000016
B0JCPD000021
B0JCPG000005

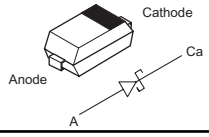


B1GDCFJJ0008
B1ABCF000011

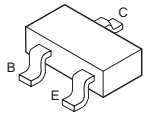


B1ABCF000079
B1GBCFGG0011
B1GBCFJJ0001
B1GBCFJN0004
B1GBCFNN0009
B1GDCFGG0005
B1GDCFNN0007

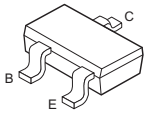


B1ABGC000001
B1GBCFJJ0007
B1GDCFJN0001
UNR521M00L

B1DHDD000029

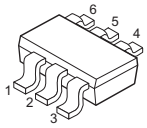


B0FBAR000041

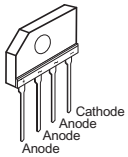


B0ZAZ0000052

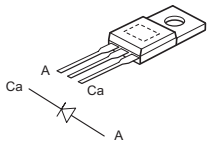


B0HBSM000043

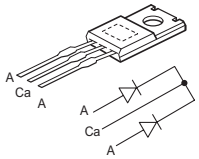


B0HFRJ000012

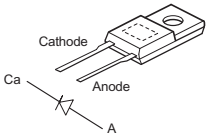


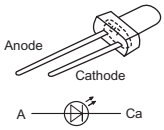


B3AAA0000489
B3ABA0000187
B3AEA0000058
B3AAA0000487
B3ADA0000087

# 10 Wiring Connection Diagram

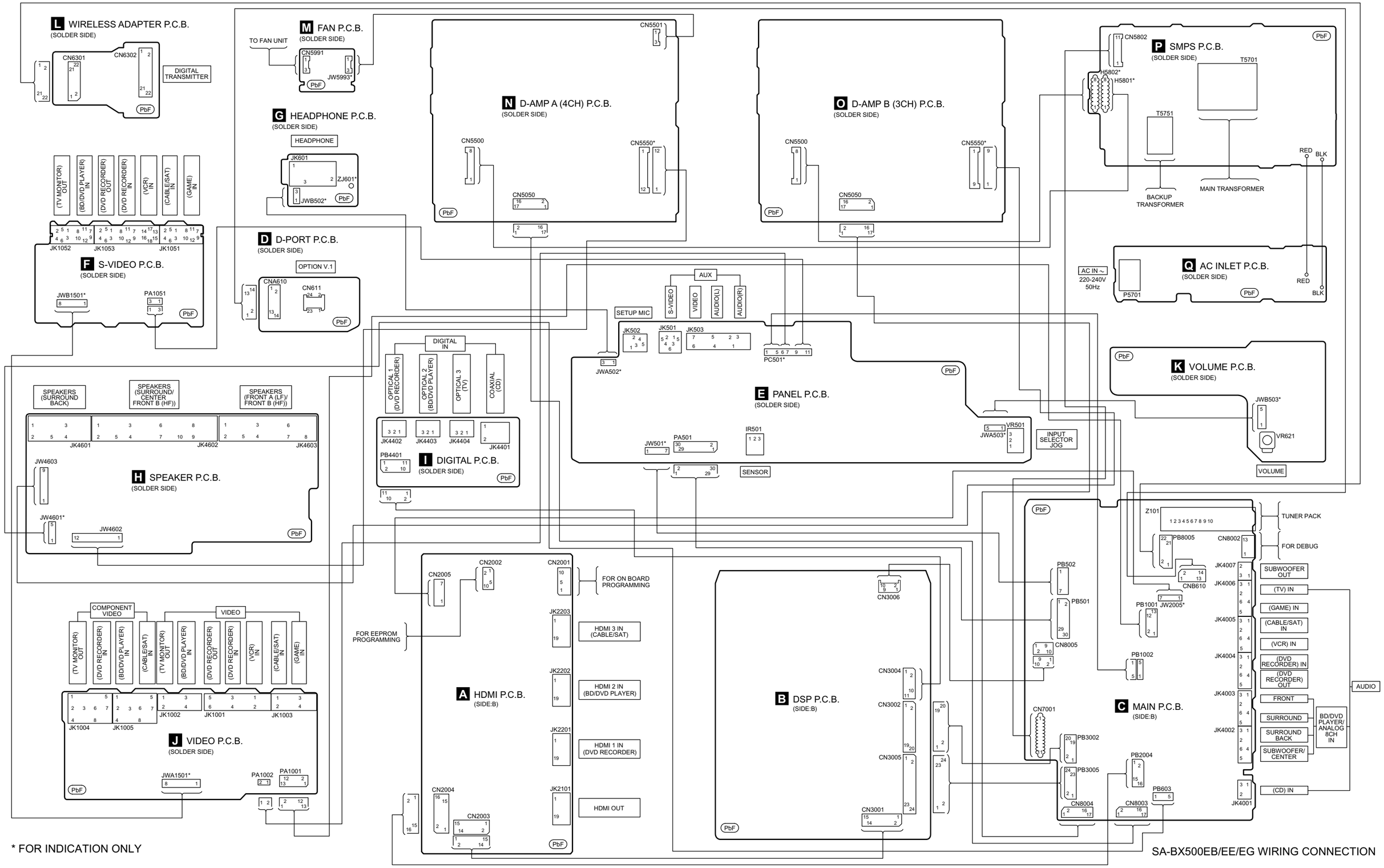


* FOR INDICATION ONLY

SA-BX500EB/EE/EG WIRING CONNECTION

# 11 Block Diagram

## 11.1. System Control

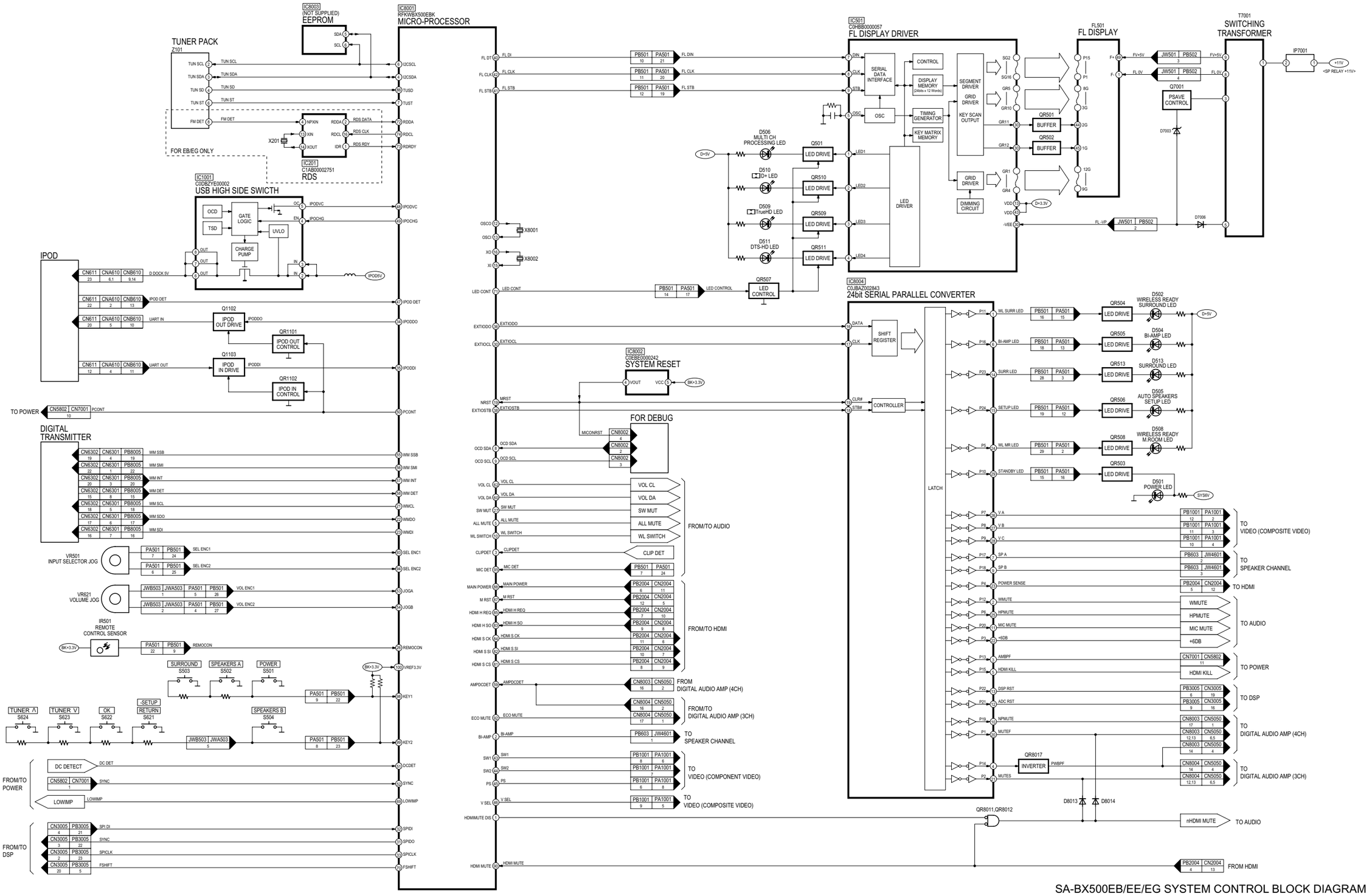


SA-BX500EB/EE/EG SYSTEM CONTROL BLOCK DIAGRAM

## 11.2. HDMI

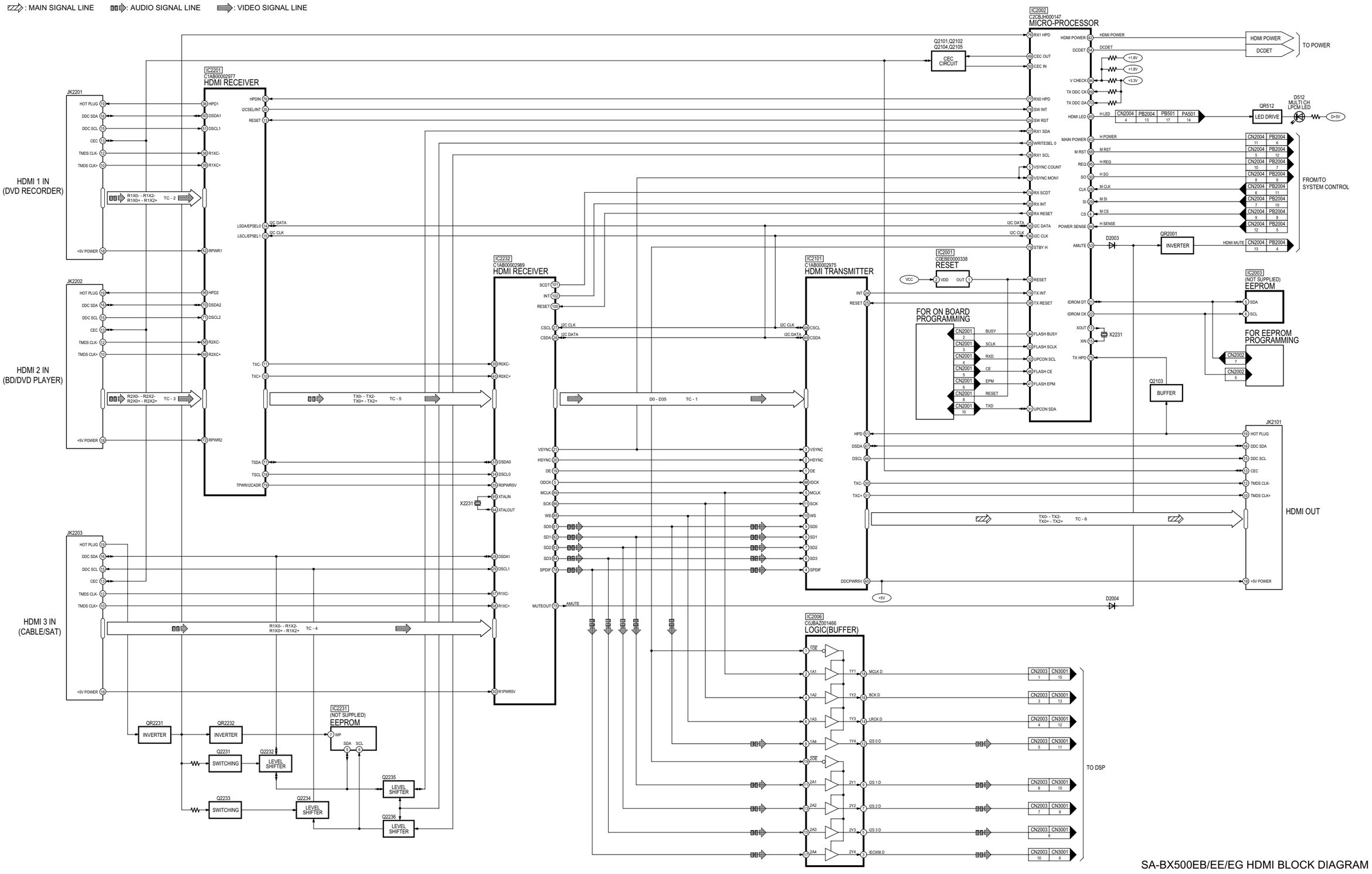


SA-BX500EB/EE/EG HDMI BLOCK DIAGRAM

## 11.3. IC Terminal (HDMI) Chart

| TC | IC2232 / HDMI RECEIVER | | SIGNAL NAME | IC2101 / HDMI TRANSMITTER | |
|---|---|---|---|---|---|
| | Port Name | Pin No | | Pin No | Port Name |
| 1 | Q0 | 16 | D0 | 98 | D0 |
| | Q1 | 15 | D1 | 97 | D1 |
| | Q2 | 14 | D2 | 96 | D2 |
| | Q3 | 13 | D3 | 95 | D3 |
| | Q4 | 10 | D4 | 94 | D4 |
| | Q5 | 9 | D5 | 93 | D5 |
| | Q6 | 8 | D6 | 92 | D6 |
| | Q7 | 7 | D7 | 91 | D7 |
| | Q8 | 3 | D8 | 90 | D8 |
| | Q9 | 2 | D9 | 86 | D9 |
| | Q10 | 1 | D10 | 85 | D10 |
| | Q11 | 144 | D11 | 84 | D11 |
| | Q12 | 141 | D12 | 83 | D12 |
| | Q13 | 140 | D13 | 82 | D13 |
| | Q14 | 139 | D14 | 81 | D14 |
| | Q15 | 138 | D15 | 80 | D15 |
| | Q16 | 135 | D16 | 79 | D16 |
| | Q17 | 134 | D17 | 78 | D17 |
| | Q18 | 133 | D18 | 77 | D18 |
| | Q19 | 132 | D19 | 75 | D19 |
| | Q20 | 129 | D20 | 74 | D20 |
| | Q21 | 128 | D21 | 73 | D21 |
| | Q22 | 127 | D22 | 72 | D22 |
| | Q23 | 126 | D23 | 71 | D23 |
| | Q24 | 123 | D24 | 70 | D24 |
| | Q25 | 122 | D25 | 69 | D25 |
| | Q26 | 121 | D26 | 68 | D26 |
| | Q27 | 120 | D27 | 67 | D27 |
| | Q28 | 117 | D28 | 63 | D28 |
| | Q29 | 116 | D29 | 62 | D29 |
| | Q30 | 115 | D30 | 61 | D30 |
| | Q31 | 114 | D31 | 60 | D31 |
| | Q32 | 111 | D32 | 59 | D32 |
| | Q33 | 110 | D33 | 58 | D33 |
| | Q34 | 109 | D34 | 57 | D34 |
| | Q35 | 108 | D35 | 56 | D35 |

| TC | JK2201 / HDMI 1 IN | | SIGNAL NAME | IC2201 / HDMI RECEIVER | |
|---|---|---|---|---|---|
| | Port Name | Pin No | | Pin No | Port Name |
| 2 | TMDS D0- | 9 | R1X0- | 41 | R1X0- |
| | TMDS D0+ | 7 | R1X0+ | 42 | R1X0+ |
| | TMDS D1- | 6 | R1X1- | 44 | R1X1- |
| | TMDS D1+ | 4 | R1X1+ | 45 | R1X1+ |
| | TMDS D2- | 2 | R1X2- | 47 | R1X2- |
| | TMDS D2+ | 1 | R1X2+ | 48 | R1X2+ |

| TC | JK2202 / HDMI 2 IN | | SIGNAL NAME | IC2201 / HDMI RECEIVER | |
|---|---|---|---|---|---|
| | Port Name | Pin No | | Pin No | Port Name |
| 3 | TMDS D0- | 9 | R2X0- | 61 | R2X0- |
| | TMDS D0+ | 7 | R2X0+ | 62 | R2X0+ |
| | TMDS D1- | 6 | R2X1- | 64 | R2X1- |
| | TMDS D1+ | 4 | R2X1+ | 65 | R2X1+ |
| | TMDS D2- | 2 | R2X2- | 67 | R2X2- |
| | TMDS D2+ | 1 | R2X2+ | 68 | R2X2+ |

| TC | JK2203 / HDMI 3 IN | | SIGNAL NAME | IC2232 / HDMI RECEIVER | |
|---|---|---|---|---|---|
| | Port Name | Pin No | | Pin No | Port Name |
| 4 | TMDS D0- | 9 | R1X0- | 61 | R1X0- |
| | TMDS D0+ | 7 | R1X0+ | 62 | R1X0+ |
| | TMDS D1- | 6 | R1X1- | 65 | R1X1- |
| | TMDS D1+ | 4 | R1X1+ | 66 | R1X1+ |
| | TMDS D2- | 2 | R1X2- | 69 | R1X2- |
| | TMDS D2+ | 1 | R1X2+ | 70 | R1X2+ |

| TC | IC2201 / HDMI RECEIVER | | SIGNAL NAME | IC2232 / HDMI RECEIVER | |
|---|---|---|---|---|---|
| | Port Name | Pin No | | Pin No | Port Name |
| 5 | TX0- | 9 | R0X0- | 43 | R0X0- |
| | TX0+ | 7 | R0X0+ | 44 | R0X0+ |
| | TX1- | 6 | R0X1- | 47 | R0X1- |
| | TX1+ | 4 | R0X1+ | 48 | R0X1+ |
| | TX2- | 2 | R0X2- | 51 | R0X2- |
| | TX2+ | 1 | R0X2+ | 52 | R0X2+ |

| TC | IC2101 / HDMI TRANSMITTER | | SIGNAL NAME | JK2201 / HDMI OUT | |
|---|---|---|---|---|---|
| | Port Name | Pin No | | Pin No | Port Name |
| 6 | TX0- | 33 | TX0- | 9 | TMDS D0- |
| | TX0+ | 34 | TX0+ | 7 | TMDS D0+ |
| | TX1- | 36 | TX1- | 6 | TMDS D1- |
| | TX1+ | 37 | TX1+ | 4 | TMDS D1+ |
| | TX2- | 39 | TX2- | 2 | TMDS D2- |
| | TX2+ | 40 | TX2+ | 1 | TMDS D2+ |

## 11.4. DSP

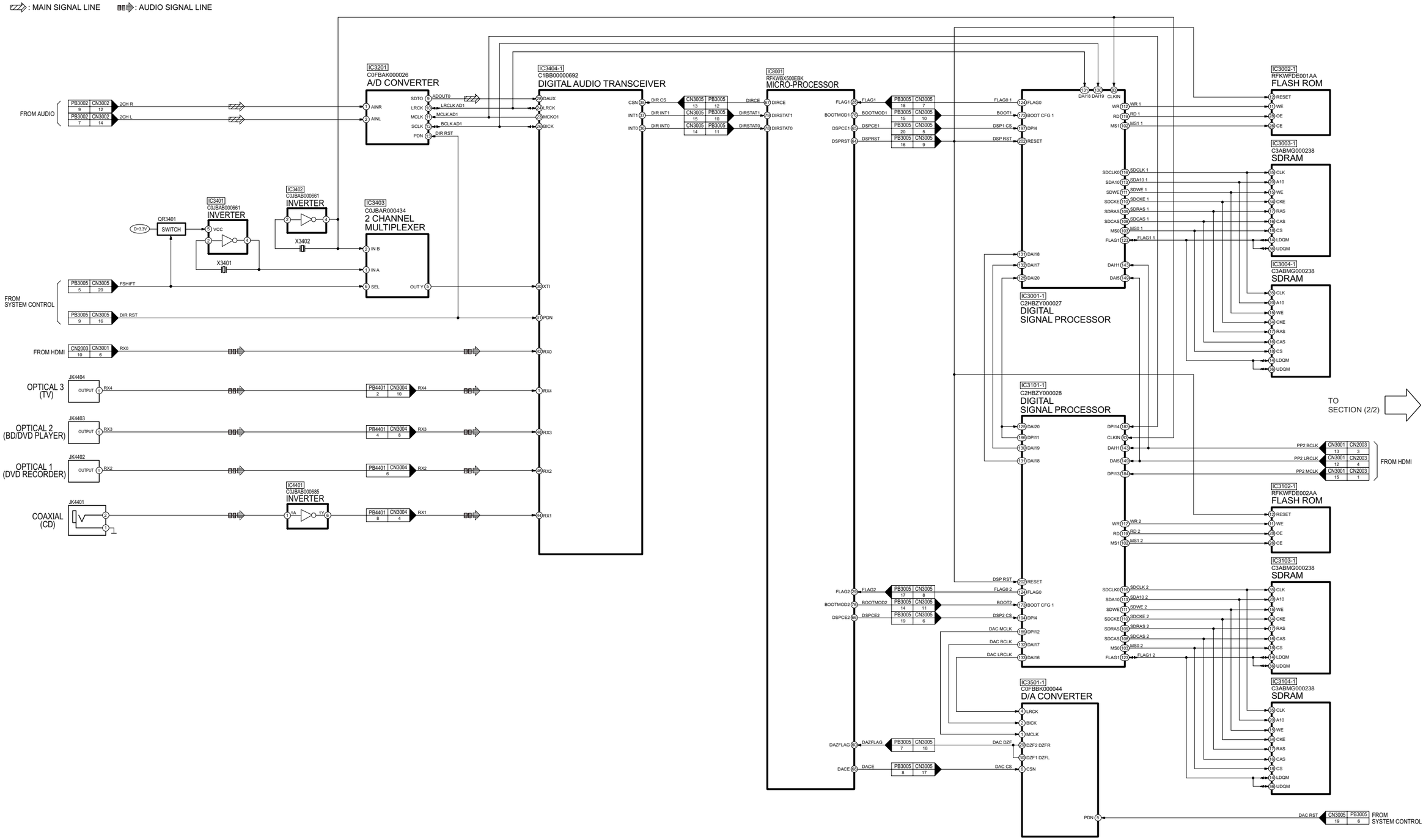


SA-BX500EB/EE/EG DSP (SECTION 1/2) BLOCK DIAGRAM

: MAIN SIGNAL LINE  : AUDIO SIGNAL LINE

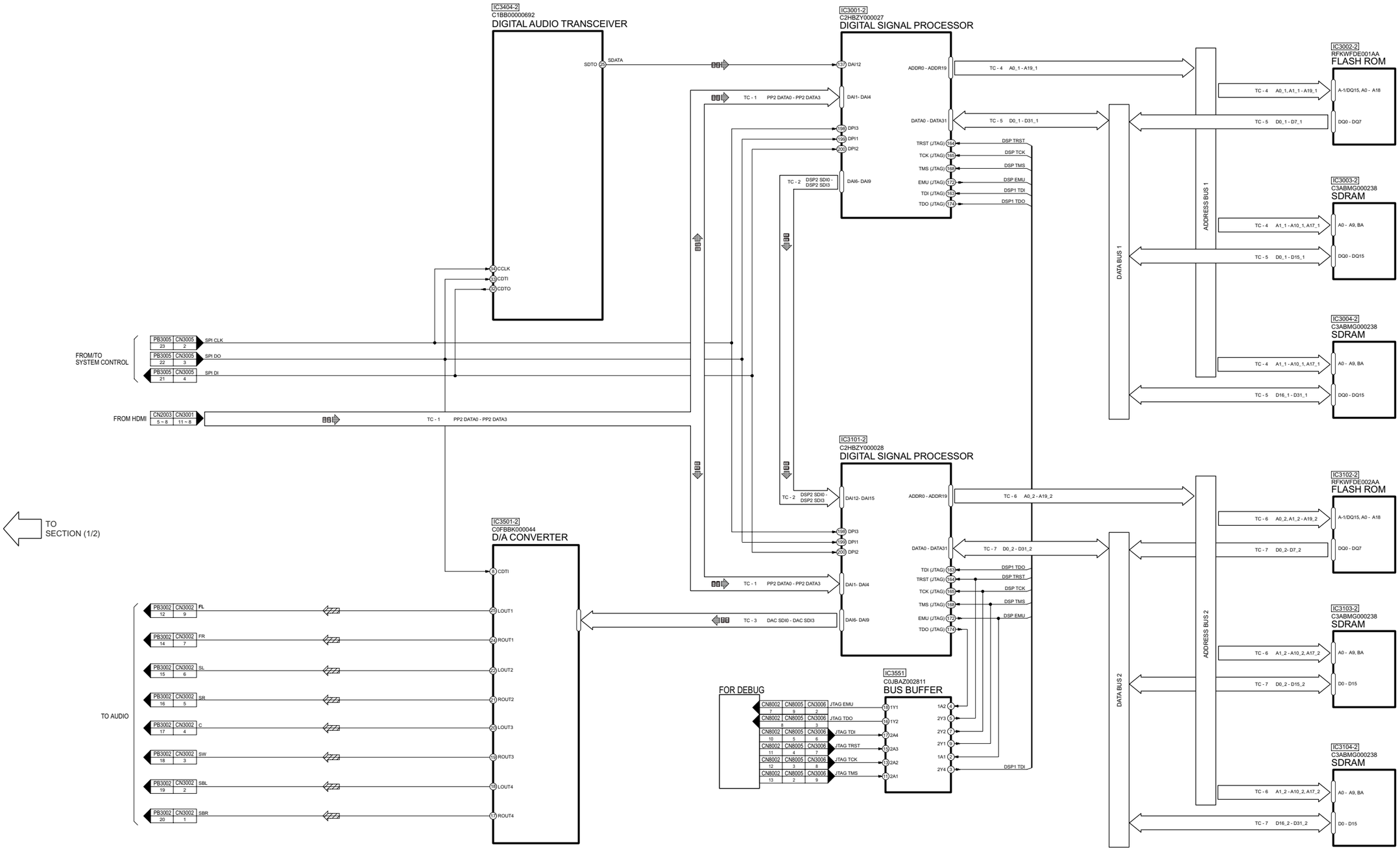


SA-BX500EB/EE/EG DSP (SECTION 2/2) BLOCK DIAGRAM

# 11.5. IC Terminal (DSP) Chart

| TC | 1 | | | | | |
|---|---|---|---|---|---|---|
| SIGNAL NAME | CN3001 / (FROM CN2003, HDMI) | | IC3001 / DSP | | IC3101 / DSP | |
| | Pin No | Port Name | Pin No | Port Name | Pin No | Port Name |
| PP2_DATA0 | 11 | DO | 178 | DAI1 | 178 | DAI1 |
| PP2_DATA1 | 10 | D1 | 176 | DAI2 | 176 | DAI2 |
| PP2_DATA2 | 9 | D2 | 177 | DAI3 | 177 | DAI3 |
| PP2_DATA3 | 8 | D3 | 175 | DAI4 | 175 | DAI4 |

| TC | IC3001 / DSP | | SIGNAL NAME | IC3101 / DSP | |
|---|---|---|---|---|---|
| | Port Name | Pin No | | Pin No | Port Name |
| 2 | DAI6 | 147 | DSP2_SDI0 | 137 | DAI2 |
| | DAI7 | 148 | DSP2_SDI1 | 136 | DAI3 |
| | DAI8 | 145 | DSP2_SDI2 | 135 | DAI4 |
| | DAI9 | 146 | DSP2_SDI3 | 134 | DAI5 |

| TC | IC3101 / DSP | | SIGNAL NAME | IC3501 / D/A CONVERTER | |
|---|---|---|---|---|---|
| | Port Name | Pin No | | Pin No | Port Name |
| 3 | DAI6 | 147 | DAC_SDI0 | 3 | SDT1 |
| | DAI7 | 148 | DAC_SDI1 | 9 | SDT2 |
| | DAI8 | 145 | DAC_SDI2 | 10 | SDT3 |
| | DAI9 | 146 | DAC_SDI3 | 11 | SDT4 |

| TC | 4 | | | | | | | |
|---|---|---|---|---|---|---|---|---|
| SIGNAL NAME | IC3001 / DSP | | IC3002 / FLASH ROM | | IC3003 / SDRAM | | IC3004 / SDRAM | |
| | Pin No | Port Name | Pin No | Port Name | Pin No | Port Name | Pin No | Port 005ame |
| A0_1 | 56 | ADDR0 | 45 | A-1/DQ15 | - | - | - | - |
| A1_1 | 58 | ADDR1 | 25 | A0 | 21 | A0 | 21 | A0 |
| A2_1 | 57 | ADDR2 | 24 | A1 | 22 | A1 | 22 | A1 |
| A3_1 | 60 | ADDR3 | 23 | A2 | 23 | A2 | 23 | A2 |
| A4_1 | 59 | ADDR4 | 22 | A3 | 24 | A3 | 24 | A3 |
| A5_1 | 61 | ADDR5 | 21 | A4 | 27 | A4 | 27 | A4 |
| A6_1 | 66 | ADDR6 | 20 | A5 | 28 | A5 | 28 | A5 |
| A7_1 | 67 | ADDR7 | 19 | A6 | 29 | A6 | 29 | A6 |
| A8_1 | 68 | ADDR8 | 18 | A7 | 30 | A7 | 30 | A7 |
| A9_1 | 69 | ADDR9 | 17 | A8 | 31 | A8 | 31 | A8 |
| A10_1 | 70 | ADDR10 | 7 | A9 | 32 | A9 | 32 | A9 |
| A11_1 | 75 | ADDR11 | 6 | A10 | - | - | - | - |
| A12_1 | 76 | ADDR12 | 5 | A11 | - | - | - | - |
| A13_1 | 77 | ADDR13 | 4 | A12 | - | - | - | - |
| A14_1 | 88 | ADDR14 | 3 | A13 | - | - | - | - |
| A15_1 | 91 | ADDR15 | 2 | A14 | - | - | - | - |
| A16_1 | 92 | ADDR16 | 1 | A15 | - | - | - | - |
| A17_1 | 93 | ADDR17 | 48 | A16 | 19 | BA | 19 | BA |
| A18_1 | 94 | ADDR18 | 17 | A17 | - | - | - | - |
| A19_1 | 97 | ADDR19 | 16 | A18 | - | - | - | - |

| TC | 5 | | | | | | | |
|---|---|---|---|---|---|---|---|---|
| SIGNAL NAME | IC3001 / DSP | | IC3002 / FLASH ROM | | IC3003 / SDRAM | | IC3004 / SDRAM | |
| | Pin No | Port Name | Pin No | Port Name | Pin No | Port Name | Pin No | Port004Name |
| D0_1 | 48 | DATA0 | 29 | DQ0 | 2 | DQ0 | - | - |
| D1_1 | 49 | DATA1 | 31 | DQ1 | 3 | DQ1 | - | - |
| D2_1 | 46 | DATA2 | 33 | DQ2 | 5 | DQ2 | - | - |
| D3_1 | 47 | DATA3 | 35 | DQ3 | 6 | DQ3 | - | - |
| D4_1 | 44 | DATA4 | 38 | DQ4 | 8 | DQ4 | - | - |
| D5_1 | 45 | DATA5 | 40 | DQ5 | 9 | DQ5 | - | - |
| D6_1 | 40 | DATA6 | 42 | DQ6 | 11 | DQ6 | - | - |
| D7_1 | 39 | DATA7 | 44 | DQ7 | 12 | DQ7 | - | - |
| D8_1 | 38 | DATA8 | - | - | 39 | DQ8 | - | - |
| D9_1 | 37 | DATA9 | - | - | 40 | DQ9 | - | - |
| D10_1 | 36 | DATA10 | - | - | 42 | DQ10 | - | - |
| D11_1 | 35 | DATA11 | - | - | 43 | DQ11 | - | - |
| D12_1 | 30 | DATA12 | - | - | 45 | DQ12 | - | - |
| D13_1 | 29 | DATA13 | - | - | 46 | DQ13 | - | - |
| D14_1 | 28 | DATA14 | - | - | 48 | DQ14 | - | - |
| D15_1 | 27 | DATA15 | - | - | 49 | DQ15 | - | - |
| D16_1 | 26 | DATA16 | - | - | - | - | 2 | DQ0 |
| D17_1 | 21 | DATA17 | - | - | - | - | 3 | DQ1 |
| D18_1 | 18 | DATA18 | - | - | - | - | 5 | DQ2 |
| D19_1 | 17 | DATA19 | - | - | - | - | 6 | DQ3 |
| D20_1 | 14 | DATA20 | - | - | - | - | 8 | DQ4 |
| D21_1 | 13 | DATA21 | - | - | - | - | 9 | DQ5 |
| D22_1 | 12 | DATA22 | - | - | - | - | 11 | DQ6 |
| D23_1 | 9 | DATA23 | - | - | - | - | 12 | DQ7 |
| D24_1 | 8 | DATA24 | - | - | - | - | 39 | DQ8 |
| D25_1 | 7 | DATA25 | - | - | - | - | 40 | DQ9 |
| D26_1 | 6 | DATA26 | - | - | - | - | 42 | DQ10 |
| D27_1 | 3 | DATA27 | - | - | - | - | 43 | DQ11 |
| D28_1 | 2 | DATA28 | - | - | - | - | 45 | DQ12 |
| D29_1 | 207 | DATA29 | - | - | - | - | 46 | DQ13 |
| D30_1 | 205 | DATA30 | - | - | - | - | 48 | DQ14 |
| D31_1 | 206 | DATA31 | - | - | - | - | 49 | DQ15 |

TO SECTION (2/2)

SA-BX500EB/EE/EG IC TERMINAL (DSP) (SECTION 1/2) CHART

| TC | 6 | | | | | | | |
|---|---|---|---|---|---|---|---|---|
| SIGNAL NAME | IC3101 / DSP | | IC3102 / FLASH ROM | | IC3103 / SDRAM | | IC3104 / SDRAM | |
| | Pin No | Port Name | Pin No | Port Name | Pin No | Port Name | Pin No | Port m4Name |
| A0_2 | 56 | ADDR0 | 45 | A-1/DQ15 | - | - | - | - |
| A1_2 | 58 | ADDR1 | 25 | A0 | 21 | A0 | 21 | A0 |
| A2_2 | 57 | ADDR2 | 24 | A1 | 22 | A1 | 22 | A1 |
| A3_2 | 60 | ADDR3 | 23 | A2 | 23 | A2 | 23 | A2 |
| A4_2 | 59 | ADDR4 | 22 | A3 | 24 | A3 | 24 | A3 |
| A5_2 | 61 | ADDR5 | 21 | A4 | 27 | A4 | 27 | A4 |
| A6_2 | 66 | ADDR6 | 20 | A5 | 28 | A5 | 28 | A5 |
| A7_2 | 67 | ADDR7 | 19 | A6 | 29 | A6 | 29 | A6 |
| A8_2 | 68 | ADDR8 | 18 | A7 | 30 | A7 | 30 | A7 |
| A9_2 | 69 | ADDR9 | 17 | A8 | 31 | A8 | 31 | A8 |
| A10_2 | 70 | ADDR10 | 7 | A9 | 32 | A9 | 32 | A9 |
| A11_2 | 75 | ADDR11 | 6 | A10 | - | - | - | - |
| A12_2 | 76 | ADDR12 | 5 | A11 | - | - | - | - |
| A13_2 | 77 | ADDR13 | 4 | A12 | - | - | - | - |
| A14_2 | 88 | ADDR14 | 3 | A13 | - | - | - | - |
| A15_2 | 91 | ADDR15 | 2 | A14 | - | - | - | - |
| A16_2 | 92 | ADDR16 | 1 | A15 | - | - | - | - |
| A17_2 | 93 | ADDR17 | 48 | A16 | 19 | BA | 19 | BA |
| A18_2 | 94 | ADDR18 | 17 | A17 | - | - | - | - |
| A19_2 | 97 | ADDR19 | 16 | A18 | - | - | - | - |

TO
SECTION (1/2)

| TC | 7 | | | | | | | |
|---|---|---|---|---|---|---|---|---|
| SIGNAL NAME | IC3101 / DSP | | IC3102 / FLASH ROM | | IC3103 / SDRAM | | IC3104 / SDRAM | |
| | Pin No | Port Name | Pin No | Port Name | Pin No | Port Name | Pin No | Port m4Name |
| D0_2 | 48 | DATA0 | 29 | DQ0 | 2 | DQ0 | - | - |
| D1_2 | 49 | DATA1 | 31 | DQ1 | 3 | DQ1 | - | - |
| D2_2 | 46 | DATA2 | 33 | DQ2 | 5 | DQ2 | - | - |
| D3_2 | 47 | DATA3 | 35 | DQ3 | 6 | DQ3 | - | - |
| D4_2 | 44 | DATA4 | 38 | DQ4 | 8 | DQ4 | - | - |
| D5_2 | 45 | DATA5 | 40 | DQ5 | 9 | DQ5 | - | - |
| D6_2 | 40 | DATA6 | 42 | DQ6 | 11 | DQ6 | - | - |
| D7_2 | 39 | DATA7 | 44 | DQ7 | 12 | DQ7 | - | - |
| D8_2 | 38 | DATA8 | - | - | 39 | DQ8 | - | - |
| D9_2 | 37 | DATA9 | - | - | 40 | DQ9 | - | - |
| D10_2 | 36 | DATA10 | - | - | 42 | DQ10 | - | - |
| D11_2 | 35 | DATA11 | - | - | 43 | DQ11 | - | - |
| D12_2 | 30 | DATA12 | - | - | 45 | DQ12 | - | - |
| D13_2 | 29 | DATA13 | - | - | 46 | DQ13 | - | - |
| D14_2 | 28 | DATA14 | - | - | 48 | DQ14 | - | - |
| D15_2 | 27 | DATA15 | - | - | 49 | DQ15 | - | - |
| D16_2 | 26 | DATA16 | - | - | - | - | 2 | DQ0 |
| D17_2 | 21 | DATA17 | - | - | - | - | 3 | DQ1 |
| D18_2 | 18 | DATA18 | - | - | - | - | 5 | DQ2 |
| D19_2 | 17 | DATA19 | - | - | - | - | 6 | DQ3 |
| D20_2 | 14 | DATA20 | - | - | - | - | 8 | DQ4 |
| D21_2 | 13 | DATA21 | - | - | - | - | 9 | DQ5 |
| D22_2 | 12 | DATA22 | - | - | - | - | 11 | DQ6 |
| D23_2 | 9 | DATA23 | - | - | - | - | 12 | DQ7 |
| D24_2 | 8 | DATA24 | - | - | - | - | 39 | DQ8 |
| D25_2 | 7 | DATA25 | - | - | - | - | 40 | DQ9 |
| D26_2 | 6 | DATA26 | - | - | - | - | 42 | DQ10 |
| D27_2 | 3 | DATA27 | - | - | - | - | 43 | DQ11 |
| D28_2 | 2 | DATA28 | - | - | - | - | 45 | DQ12 |
| D29_2 | 207 | DATA29 | - | - | - | - | 46 | DQ13 |
| D30_2 | 205 | DATA30 | - | - | - | - | 48 | DQ14 |
| D31_2 | 206 | DATA31 | - | - | - | - | 49 | DQ15 |

SA-BX500EB/EE/EG IC TERMINAL (DSP) (SECTION 2/2) CHART

## 11.6. Audio

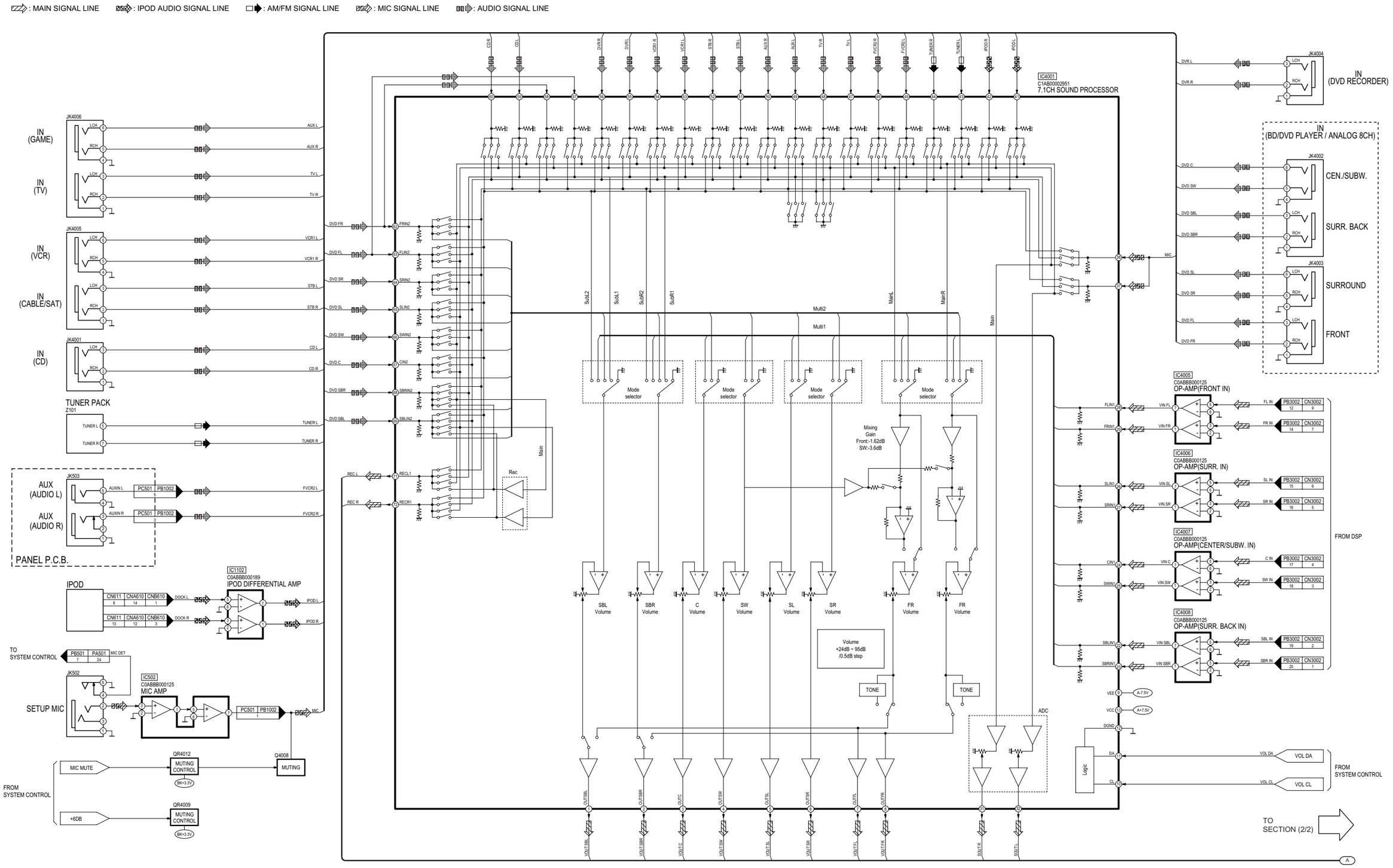


SA-BX500EB/EE/EG AUDIO (SECTION 1/2) BLOCK DIAGRAM

: MAIN SIGNAL LINE  : IPOD AUDIO SIGNAL LINE  : AM/FM SIGNAL LINE  : MIC SIGNAL LINE  : AUDIO SIGNAL LINE

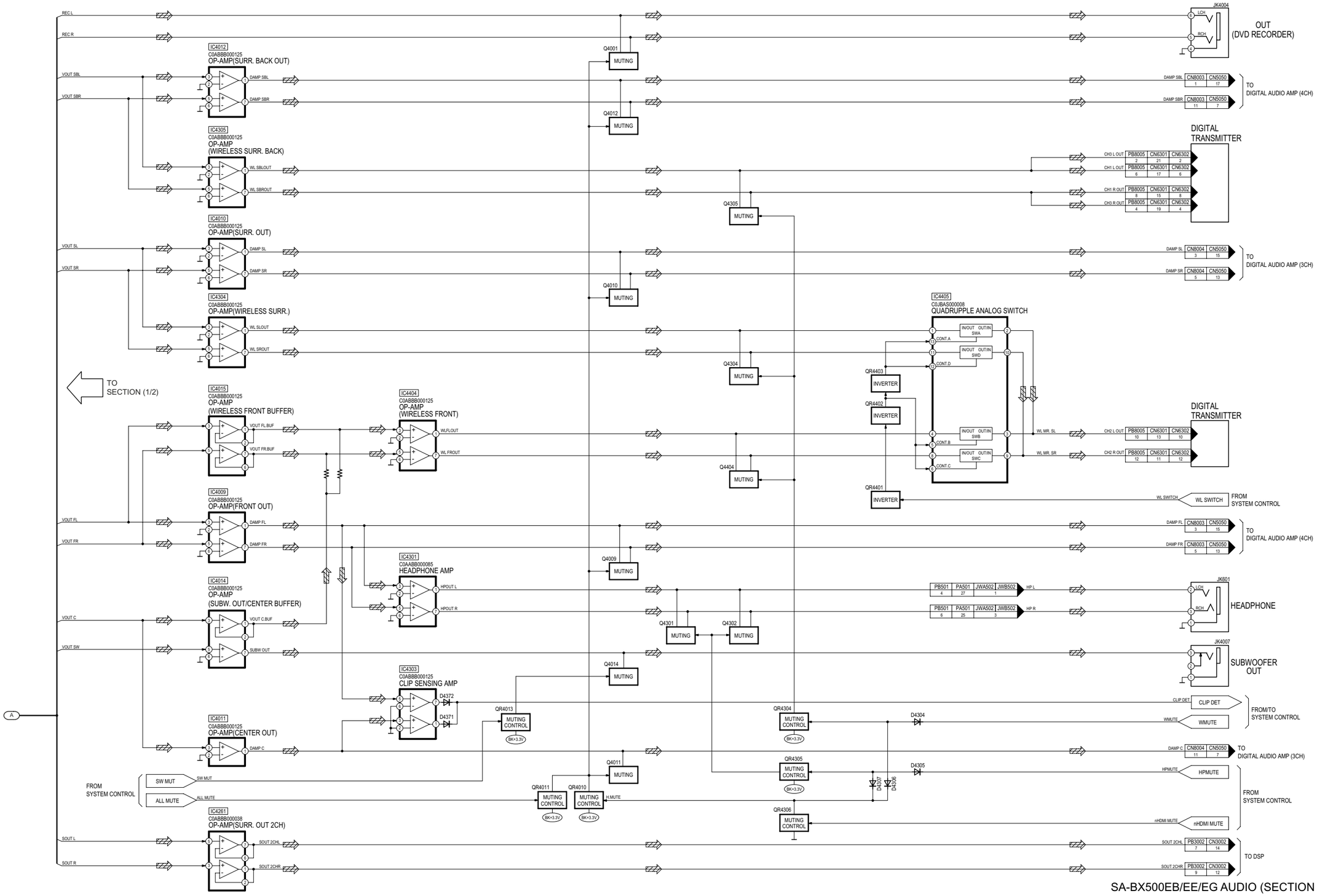


SA-BX500EB/EE/EG AUDIO (SECTION 2/2) BLOCK DIAGRAM

# 11.7. Digital Audio Amp (4CH)

: MAIN SIGNAL LINE

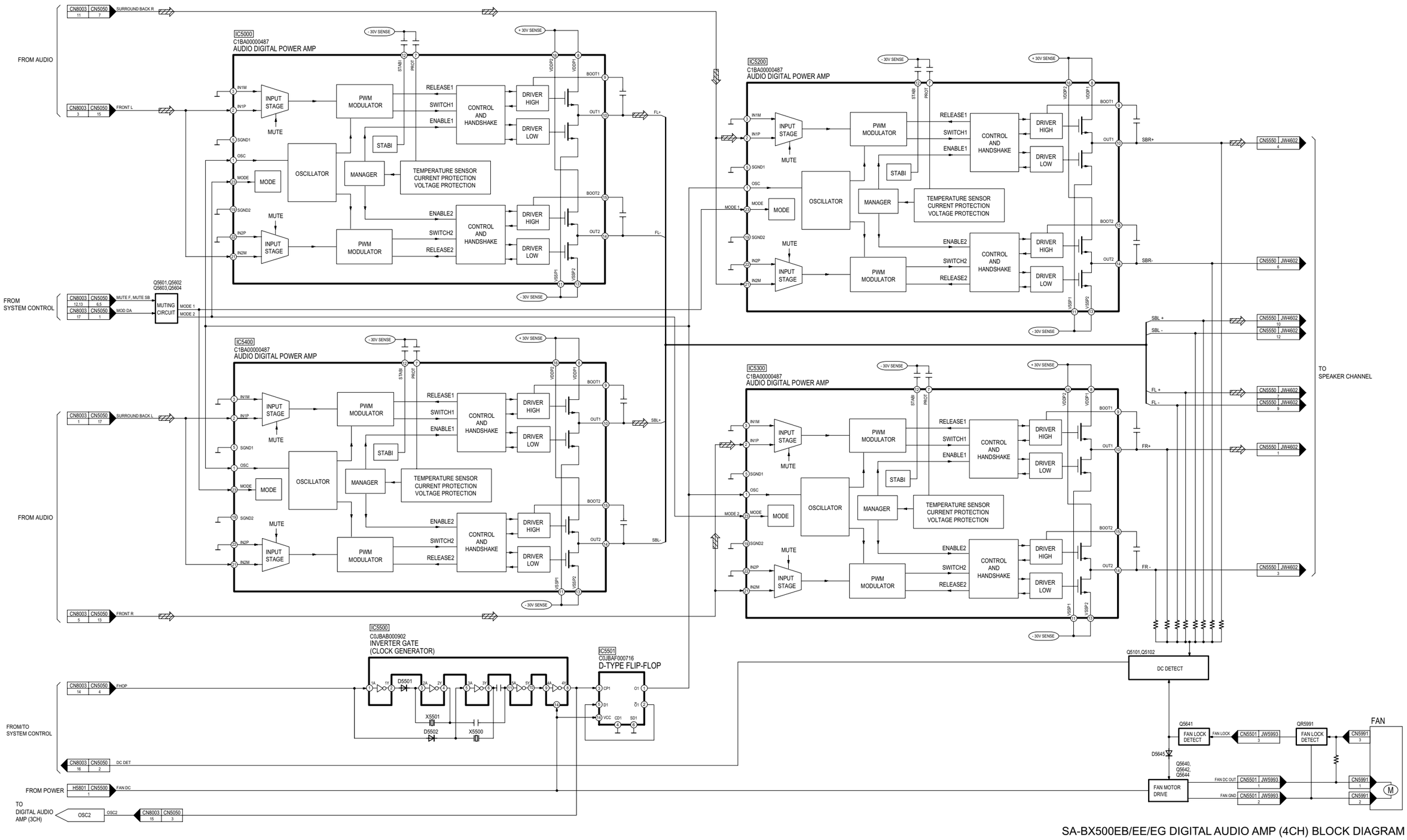


SA-BX500EB/EE/EG DIGITAL AUDIO AMP (4CH) BLOCK DIAGRAM

## 11.8. Digital Audio Amp (3CH)

: MAIN SIGNAL LINE

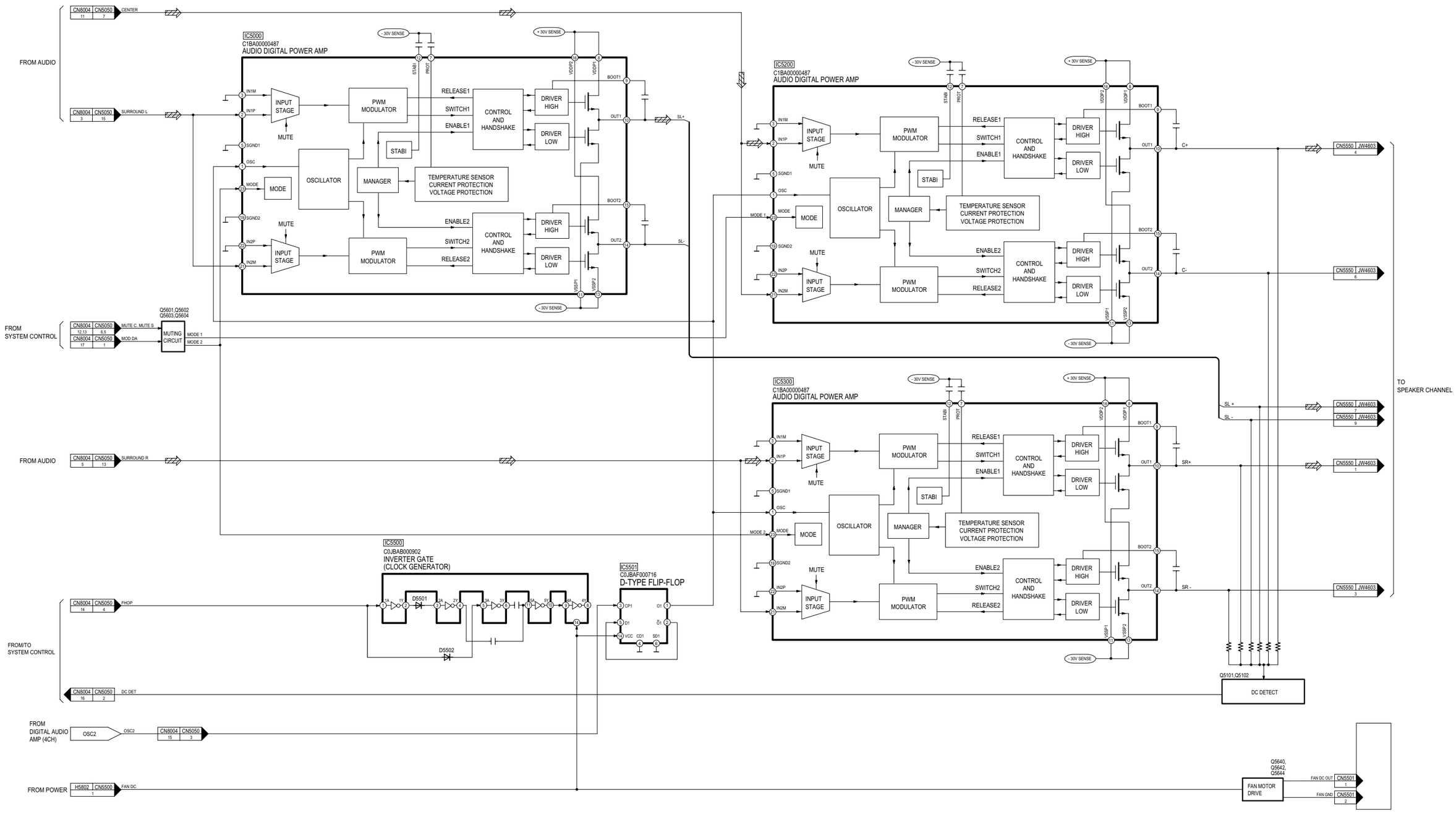


SA-BX500EB/EE/EG DIGITAL AUDIO AMP (3CH) BLOCK DIAGRAM

## 11.9. Speaker Channel

: MAIN SIGNAL LINE

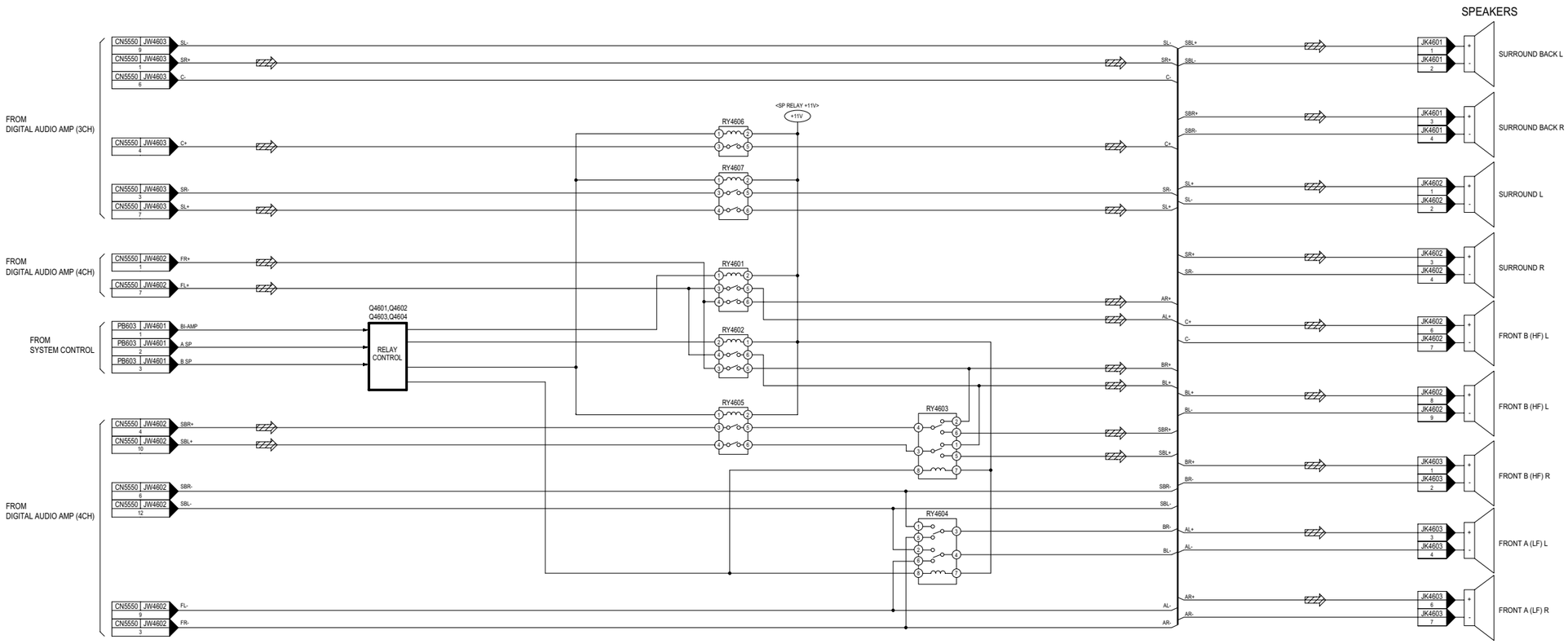


SA-BX500EB/EE/EG SPEAKER CHANNEL BLOCK DIAGRAM

## 11.10. Video (component & composite video)

: VIDEO SIGNAL LINE

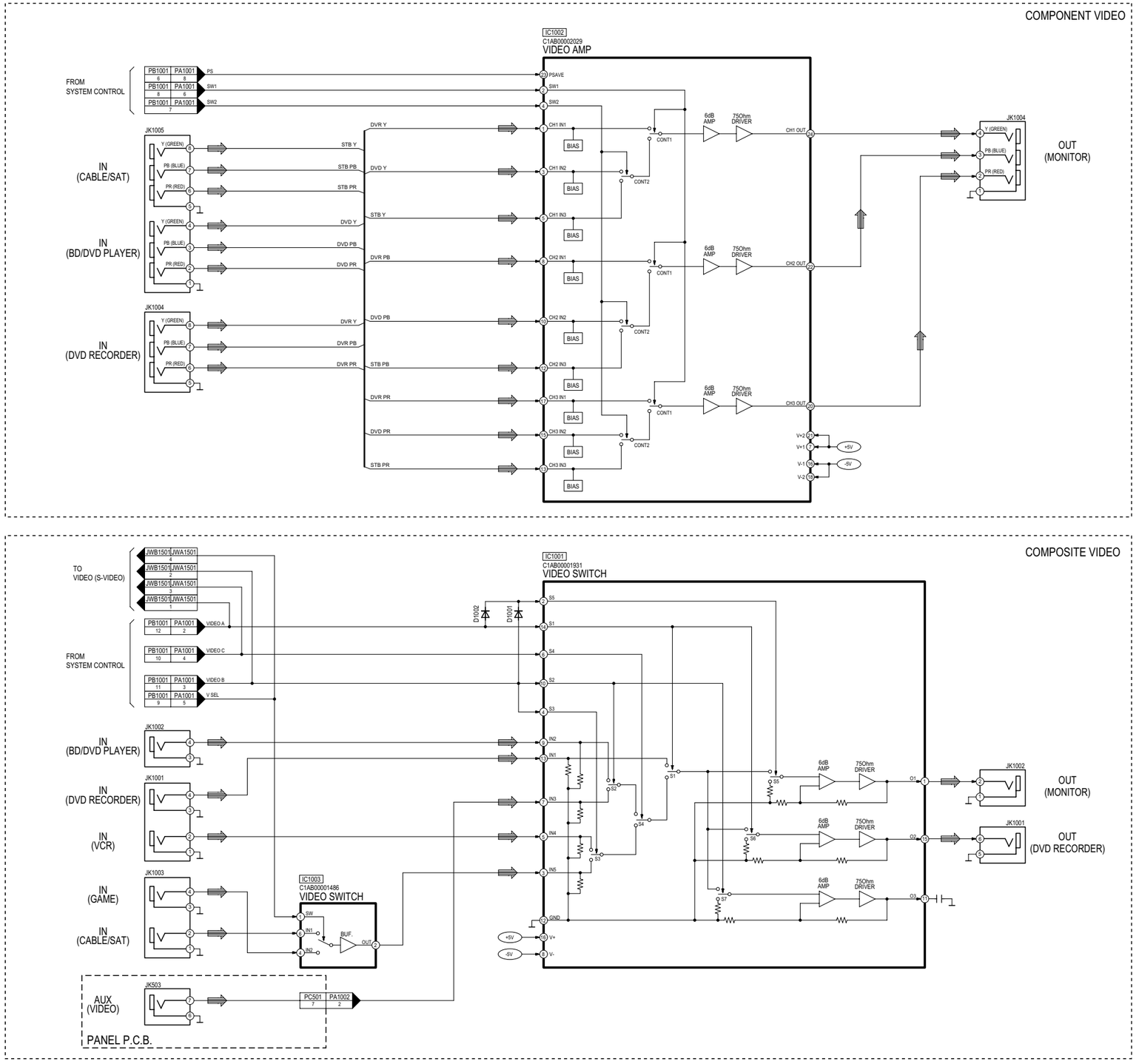


SA-BX500EB/EE/EG VIDEO (COMPONENT/COMPOSITE VIDEO) BLOCK DIAGRAM

## 11.11. Video (S-video)

: VIDEO SIGNAL LINE

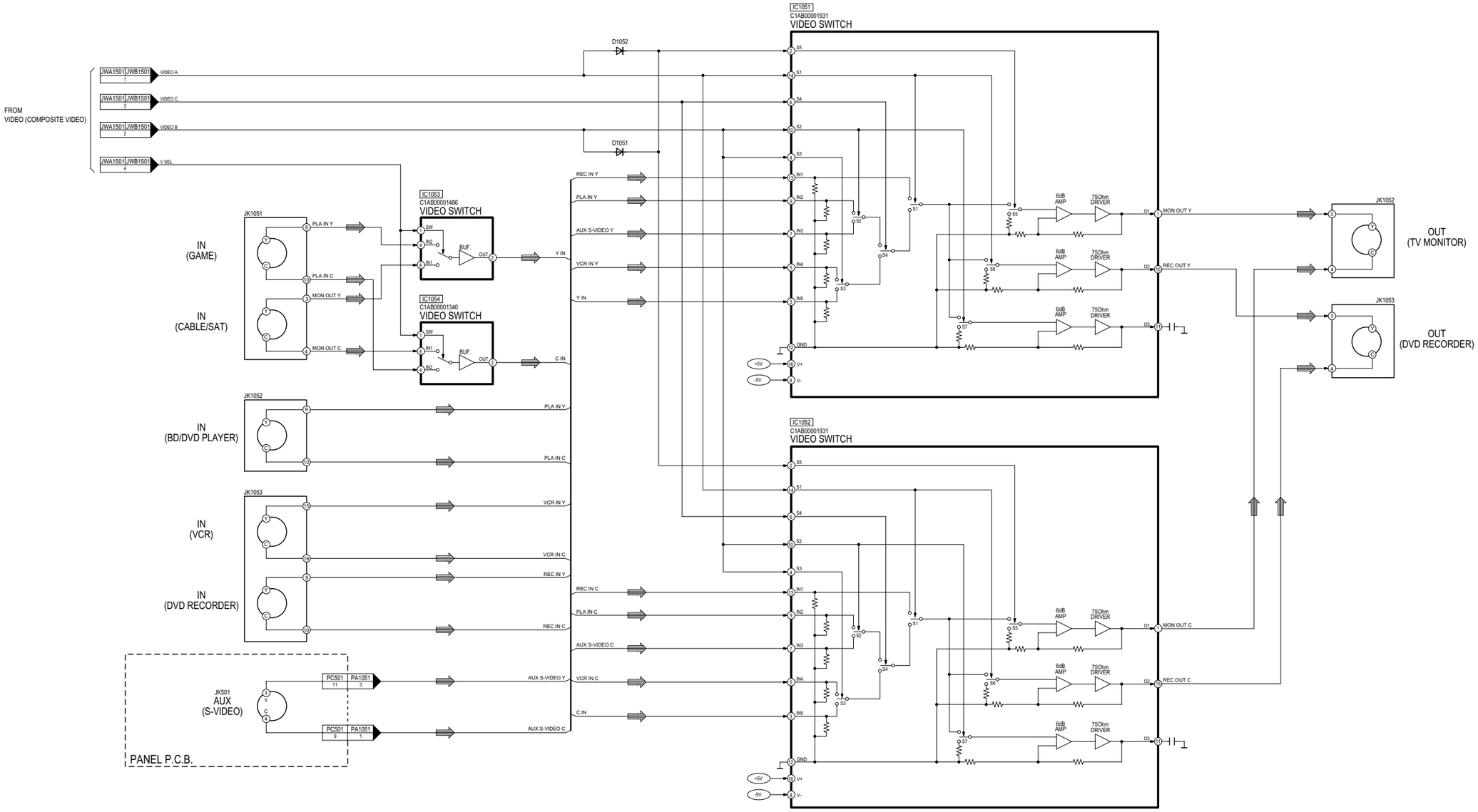


SA-BX500EB/EE/EG VIDEO (S-VIDEO) BLOCK DIAGRAM

## 11.12. Power

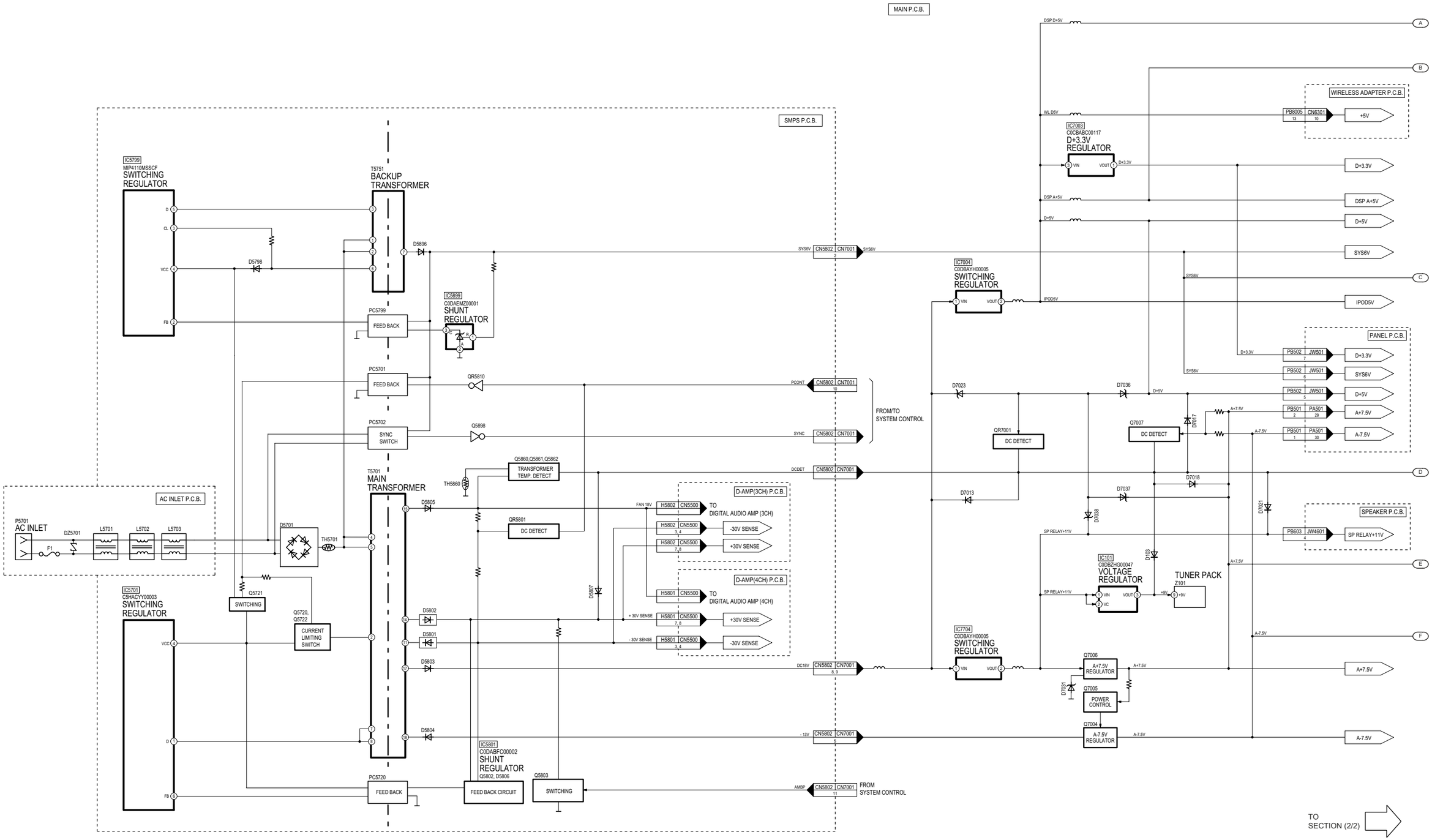


SA-BX500EB/EE/EG POWER (SECTION 1/2) BLOCK DIAGRAM

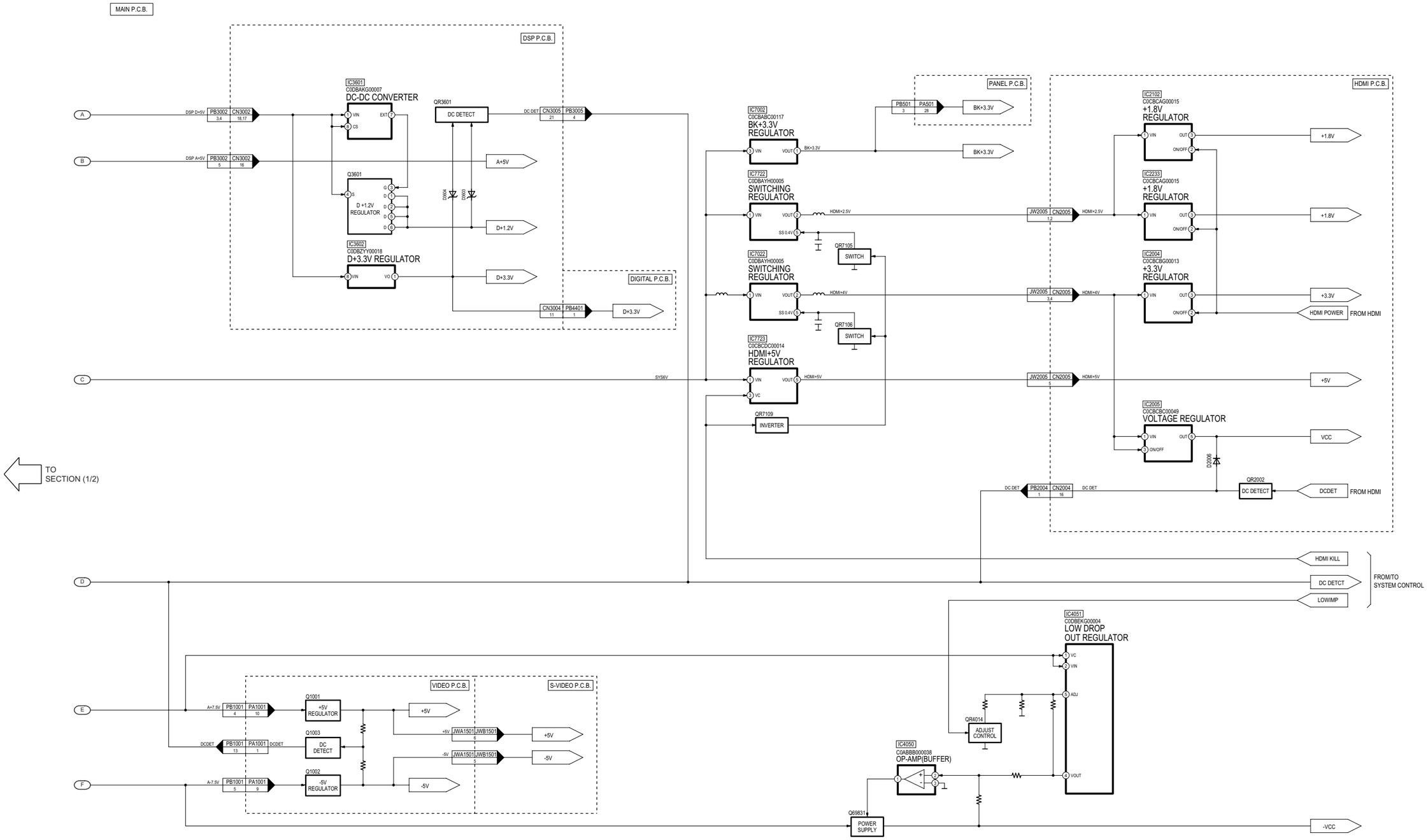


SA-BX500EB/EE/EG POWER (SECTION 2/2) BLOCK DIAGRAM

# 12 Schematic Diagram Notes

- **This schematic diagram may be modified at any time with the development of new technology.**

**Notes:**

| | |
|---|---|
| **S501:** | Power switch ( ⏻/I ). |
| **S502:** | Speaker A switch. |
| **S503:** | Surround switch. |
| **S504:** | Speaker B switch. |
| **S621:** | Return/ -Setup switch. |
| **S622:** | OK switch. |
| **S623:** | Tuner ∨ switch |
| **S624:** | Tuner ∧ switch |
| **VR501:** | Input Selector jog. |
| **VR621:** | Volume jog. |

- Important safety notice:

  Components identified by ⚠ mark have special characteristics important for safety.

  Furthermore, special parts which have purposes of fire-retardant (resistors), high-quality sound (capacitors), low-noise (resistors), etc. are used.

  When replacing any of components, be sure to use only manufacturer´s specified parts shown in the parts list.

- In case of AC rated voltage Capacitor, the part no. and values will be indicated in the Schematic Diagram.

  AC rated voltage capacitor:

  C5700, C5701, C5702, C5703, C5704

- **Resistor**

  Unit of resistance is OHM [Ω] (K=1,000, M=1,000,000).

- **Capacitor**

  Unit of capacitance is µF, unless otherwise noted. F=Farad, pF=Pico-Farad

- **Coil**

  Unit of inductance is H, unless otherwise noted.

- *****

  For indication only.

- Voltage and signal line

  : +B signal line

  : -B signal line

  : Audio signal line

  : Video signal line

  : Main signal line

  : AM/FM signal line

  : Ipod Audio signal line

  : Mic signal line

CAUTION: FOR CONTINUED PROTECTION AGAINST FIRE HAZARD, REPLACE ONLY WITH SAME TYPE F1 T4AL 250V FUSE

RISK OF FIRE-REPLACE FUSE AS MARKED.

**FUSE CAUTION**

These symbols located near the fuse indicates that the fuse used is a fast operating type. For continued protection againts fire harzard, replace with the same type fuse. fro rating, refer to the marking adjacent to the symbol.

# 13 Schematic Diagram

## 13.1. HDMI Circuit

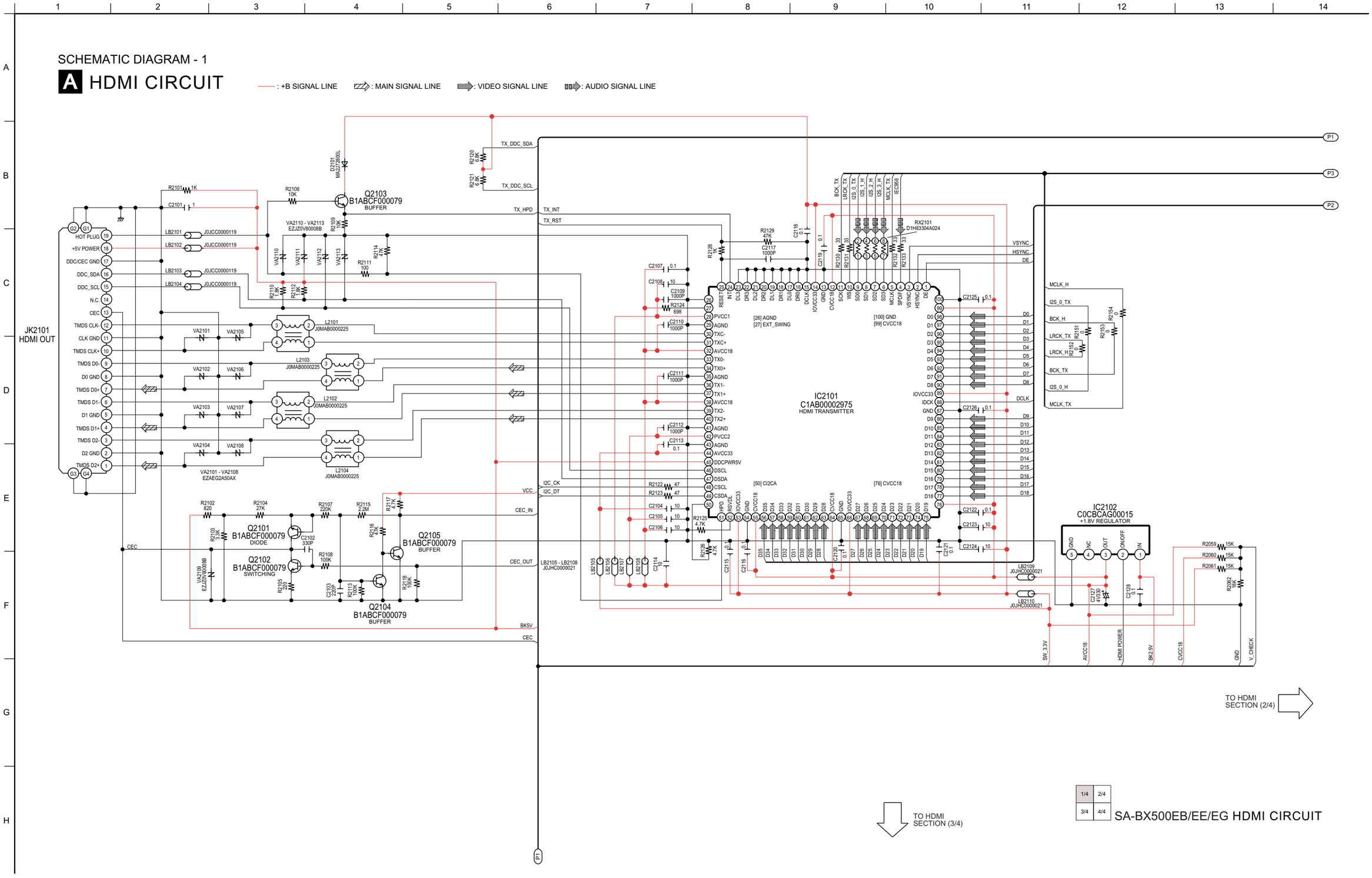

SCHEMATIC DIAGRAM - 2

# A HDMI CIRCUIT

: +B SIGNAL LINE  : MAIN SIGNAL LINE  : VIDEO SIGNAL LINE  : AUDIO SIGNAL LINE

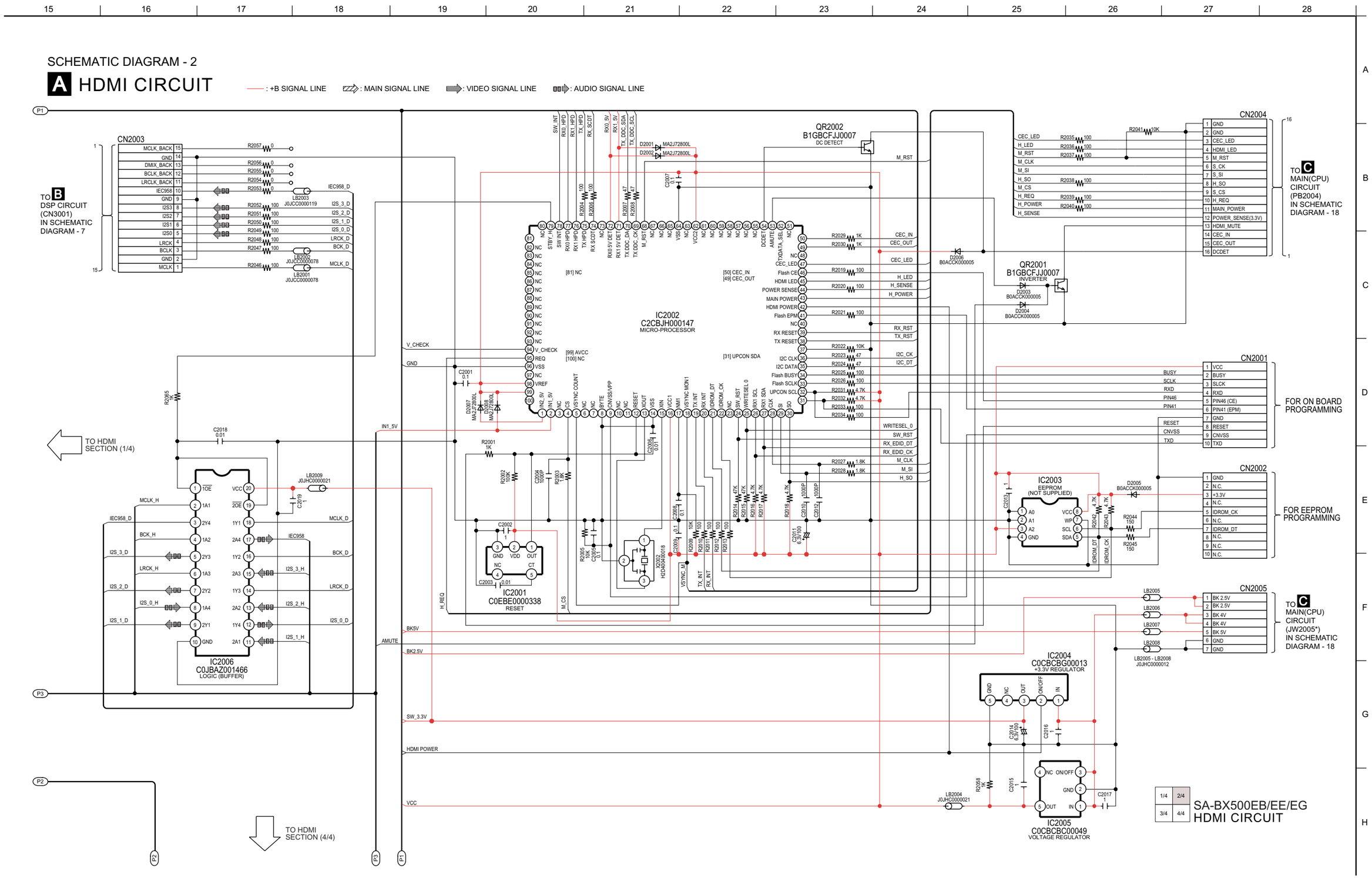

SCHEMATIC DIAGRAM - 3

# A HDMI CIRCUIT

: +B SIGNAL LINE  : MAIN SIGNAL LINE  : VIDEO SIGNAL LINE  : AUDIO SIGNAL LINE

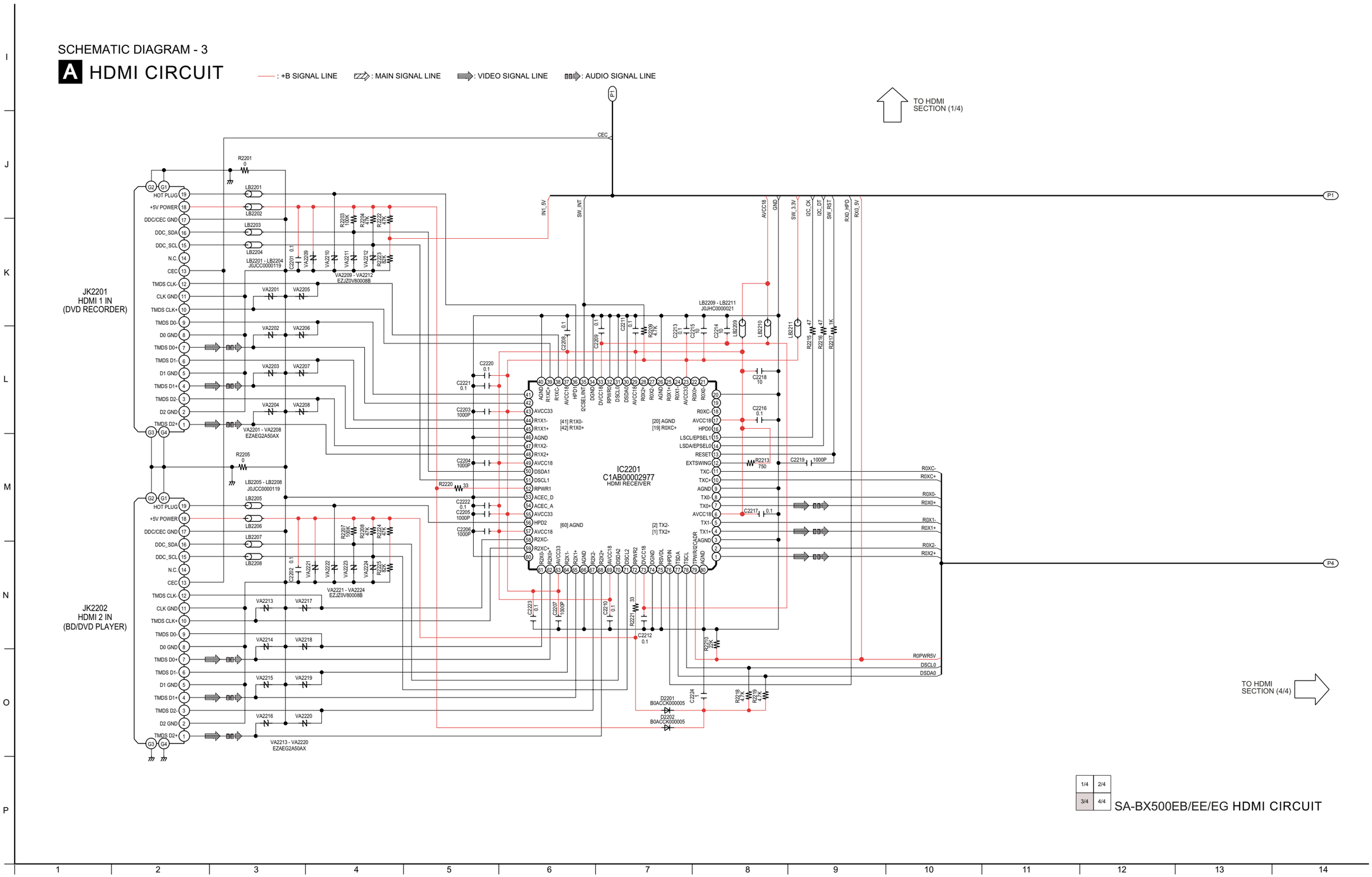


| 1/4 | 2/4 |
|---|---|
| 3/4 | 4/4 |

SA-BX500EB/EE/EG HDMI CIRCUIT

SCHEMATIC DIAGRAM - 4

# A HDMI CIRCUIT

: +B SIGNAL LINE  : MAIN SIGNAL LINE  : VIDEO SIGNAL LINE  : AUDIO SIGNAL LINE

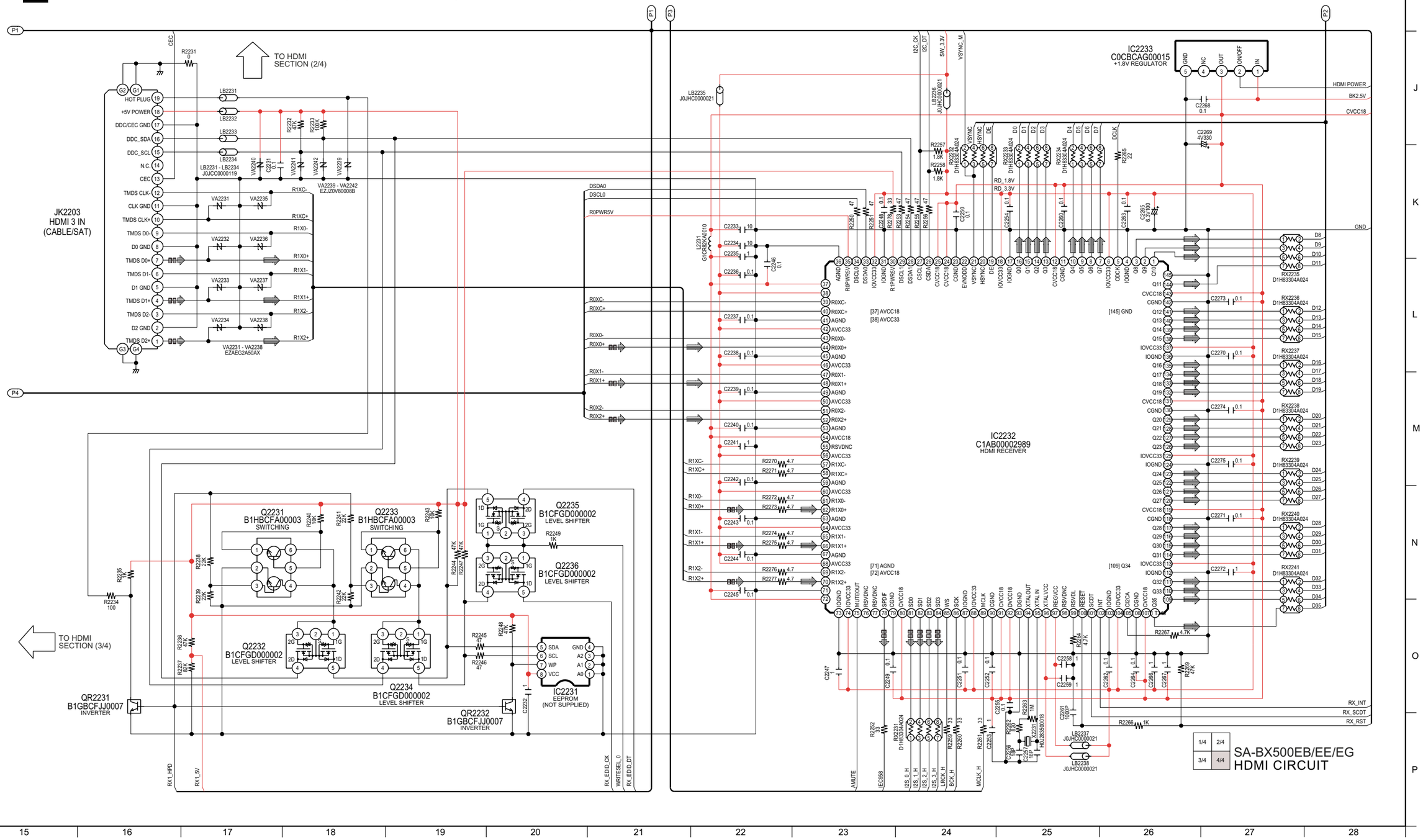

## 13.2. DSP Circuit

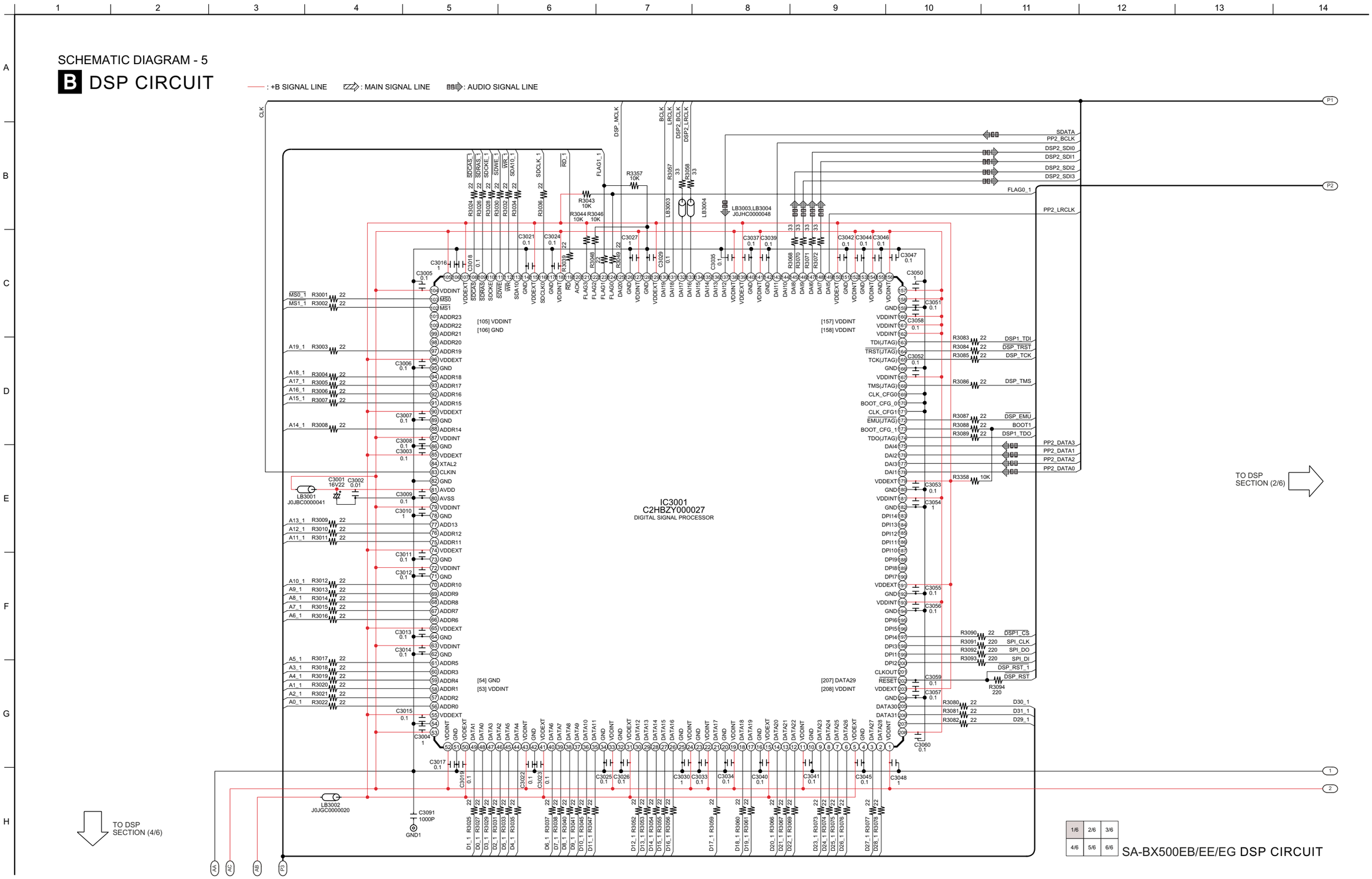

SCHEMATIC DIAGRAM - 6

# B DSP CIRCUIT

: +B SIGNAL LINE  : MAIN SIGNAL LINE  : AUDIO SIGNAL LINE

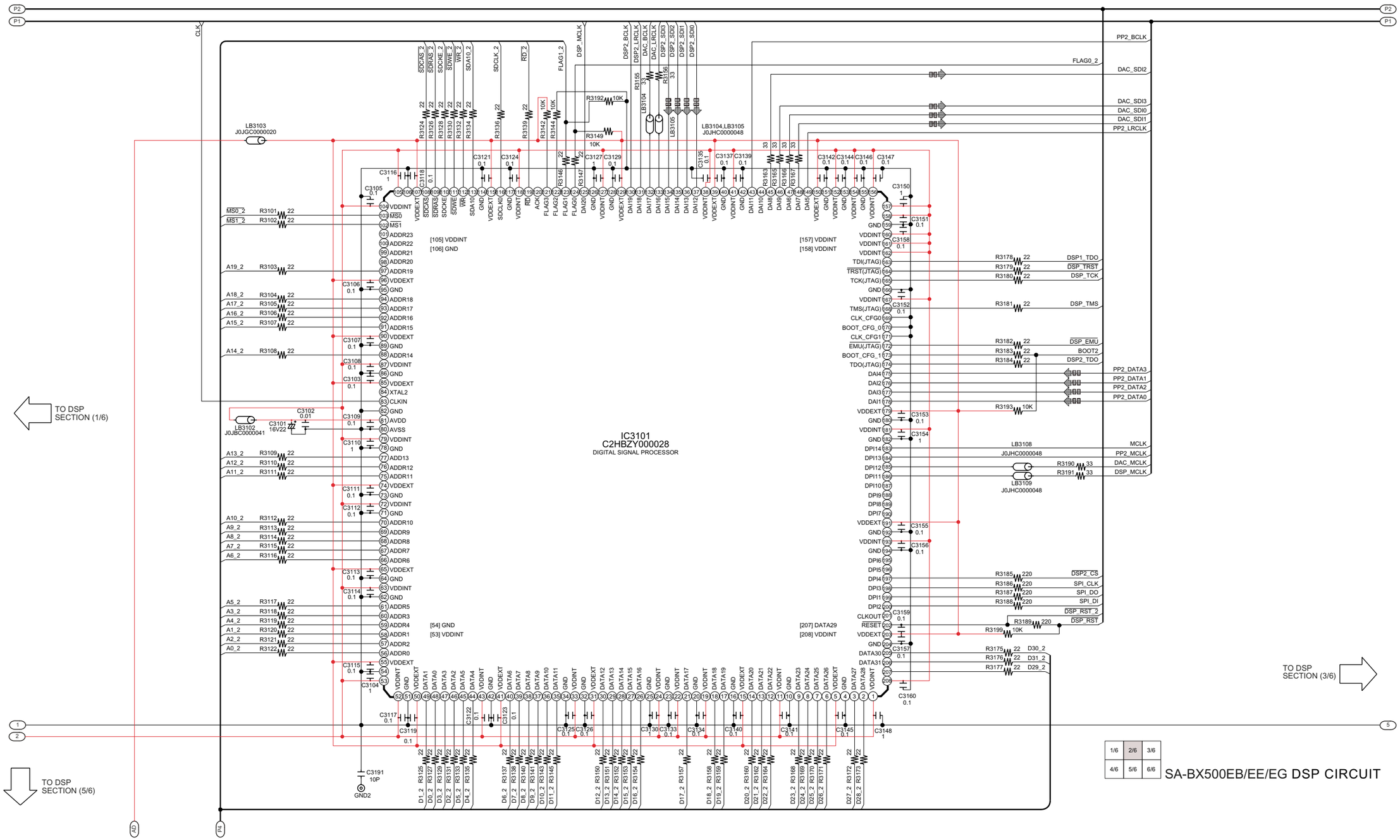


| 1/6 | 2/6 | 3/6 |
|---|---|---|
| 4/6 | 5/6 | 6/6 |

SA-BX500EB/EE/EG DSP CIRCUIT

SCHEMATIC DIAGRAM - 7

# B DSP CIRCUIT

: +B SIGNAL LINE  : MAIN SIGNAL LINE  : AUDIO SIGNAL LINE

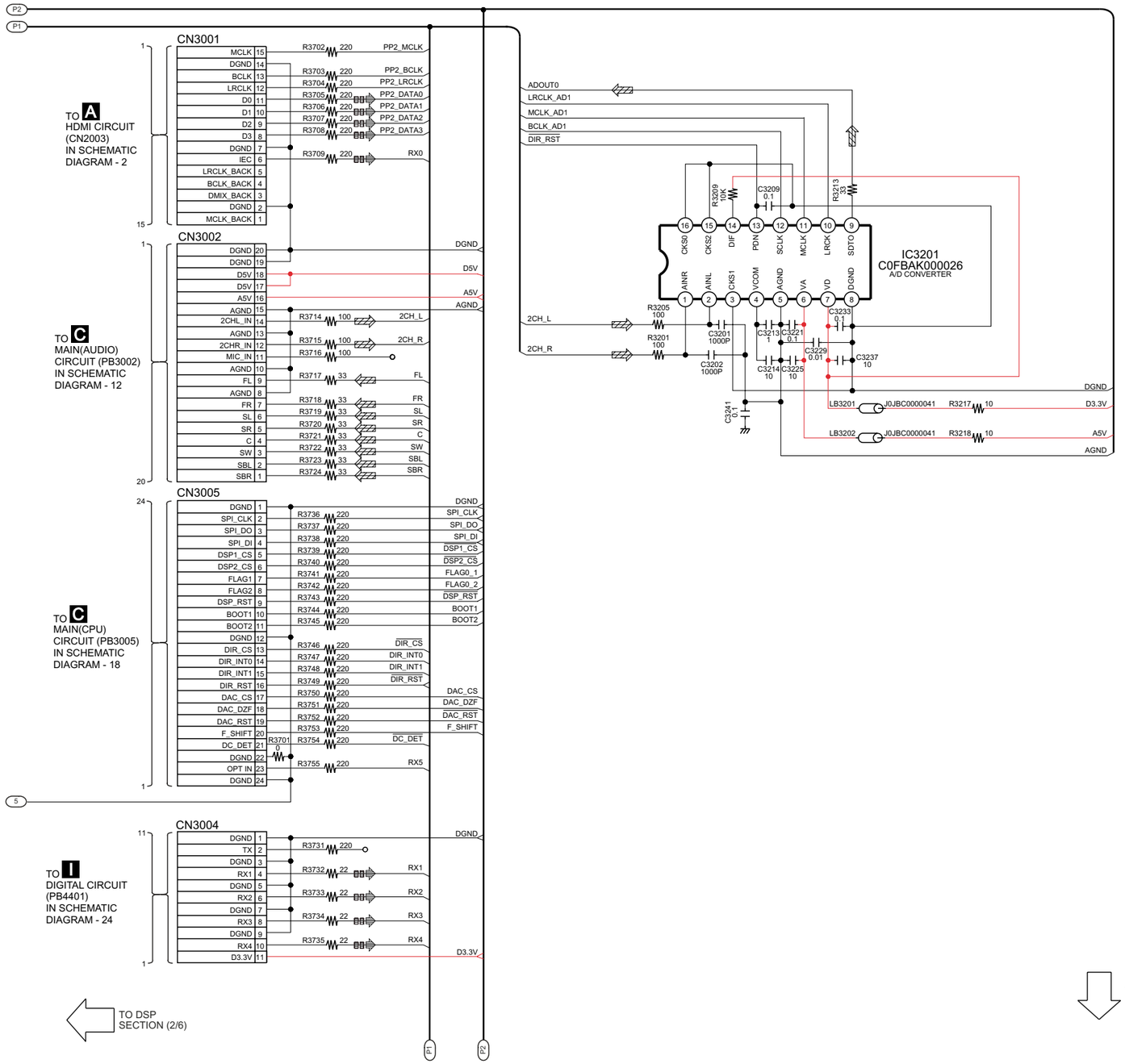

| 1/6 | 2/6 | 3/6 |
|---|---|---|
| 4/6 | 5/6 | 6/6 |

SA-BX500EB/EE/EG DSP CIRCUIT

SCHEMATIC DIAGRAM - 8

# B DSP CIRCUIT

: +B SIGNAL LINE  : MAIN SIGNAL LINE  : AUDIO SIGNAL LINE

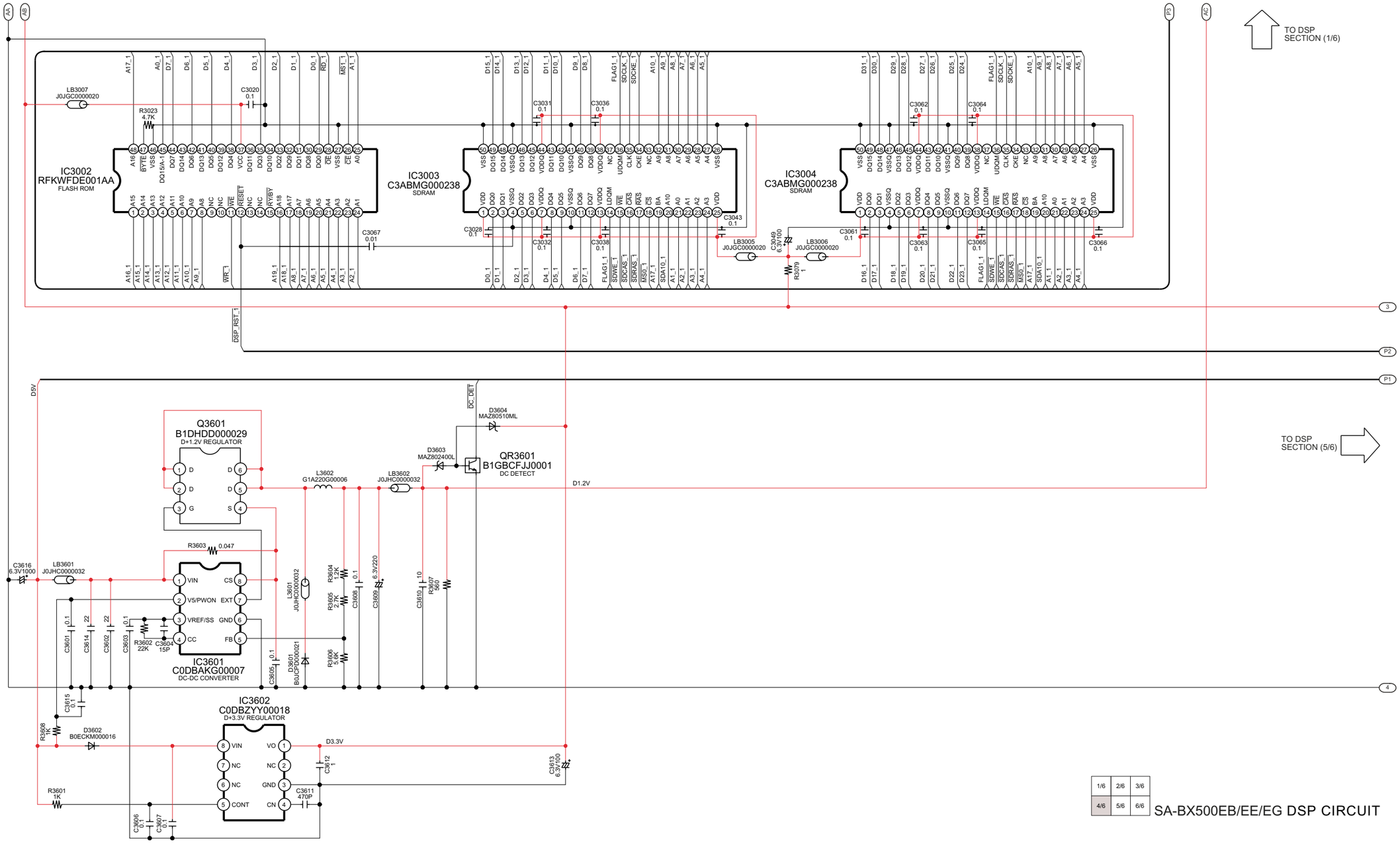


| | | |
|---|---|---|
| 1/6 | 2/6 | 3/6 |
| 4/6 | 5/6 | 6/6 |

SA-BX500EB/EE/EG DSP CIRCUIT

SCHEMATIC DIAGRAM - 9

# B DSP CIRCUIT

: +B SIGNAL LINE  : MAIN SIGNAL LINE  : AUDIO SIGNAL LINE

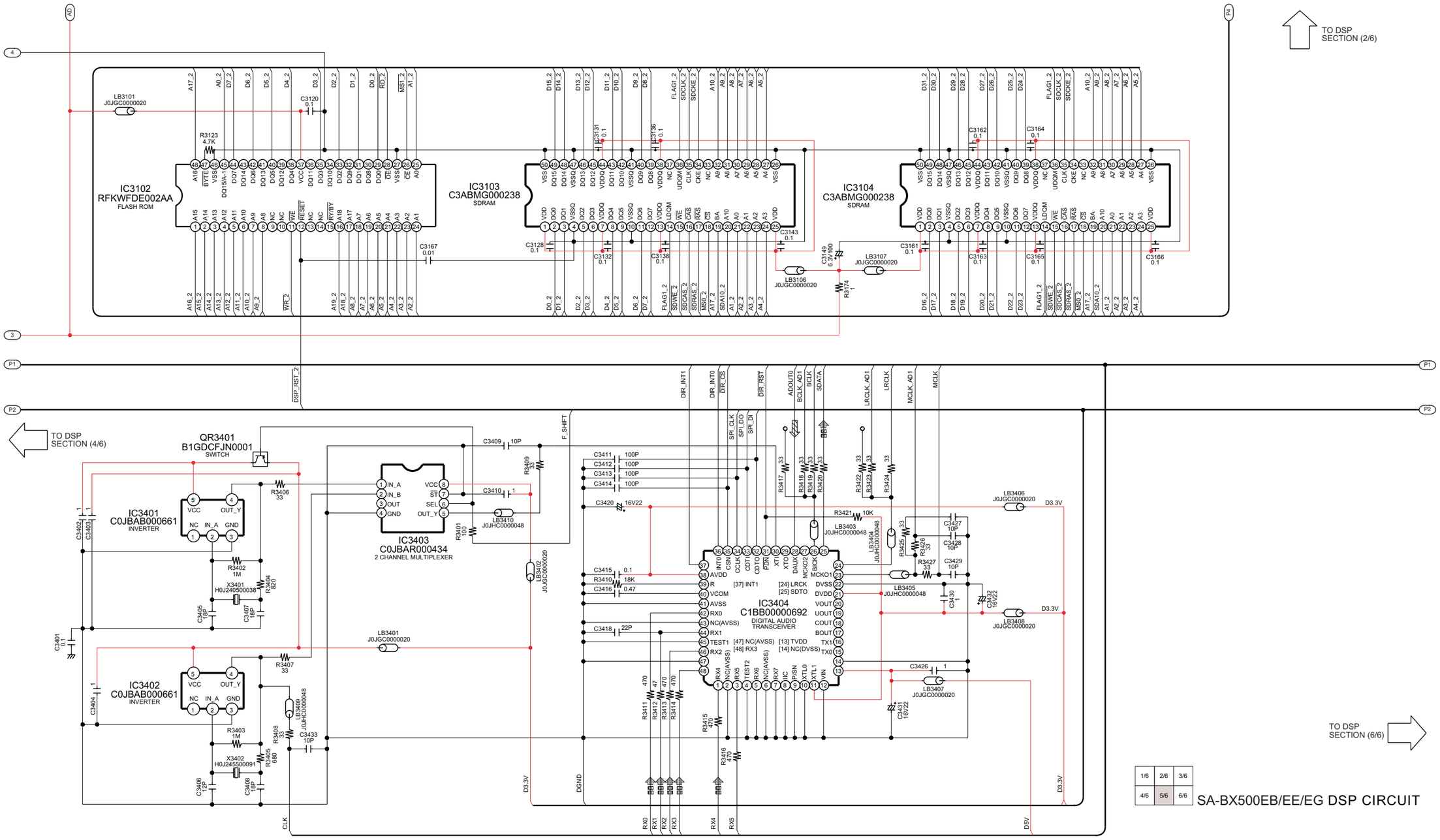


| 1/6 | 2/6 | 3/6 |
|---|---|---|
| 4/6 | 5/6 | 6/6 |

SA-BX500EB/EE/EG DSP CIRCUIT

SCHEMATIC DIAGRAM - 10

# B DSP CIRCUIT

: +B SIGNAL LINE  : MAIN SIGNAL LINE  : AUDIO SIGNAL LINE

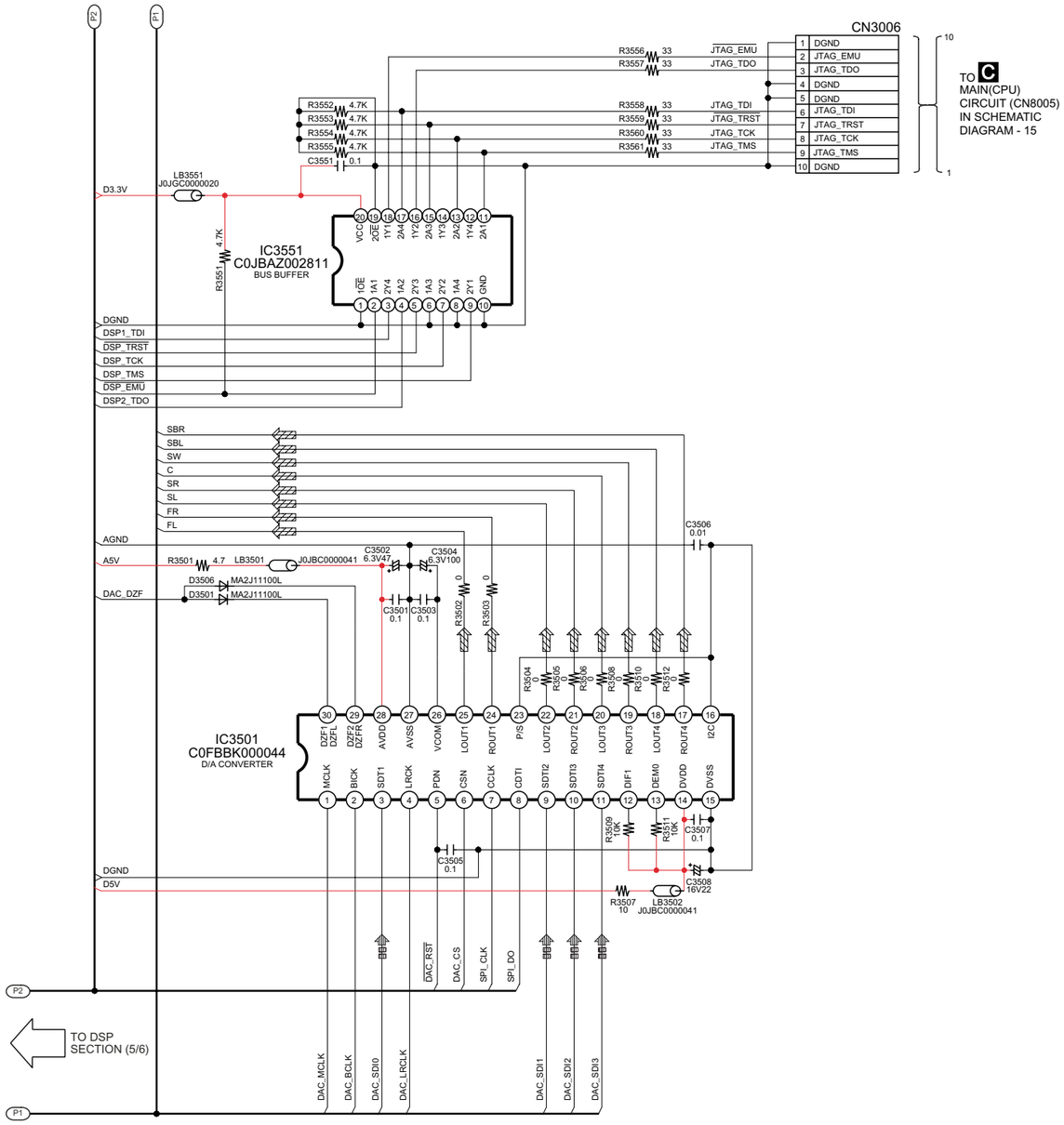


R3902 0

| 1/6 | 2/6 | 3/6 |
|---|---|---|
| 4/6 | 5/6 | 6/6 |

SA-BX500EB/EE/EG DSP CIRCUIT

## 13.3. Main Circuit

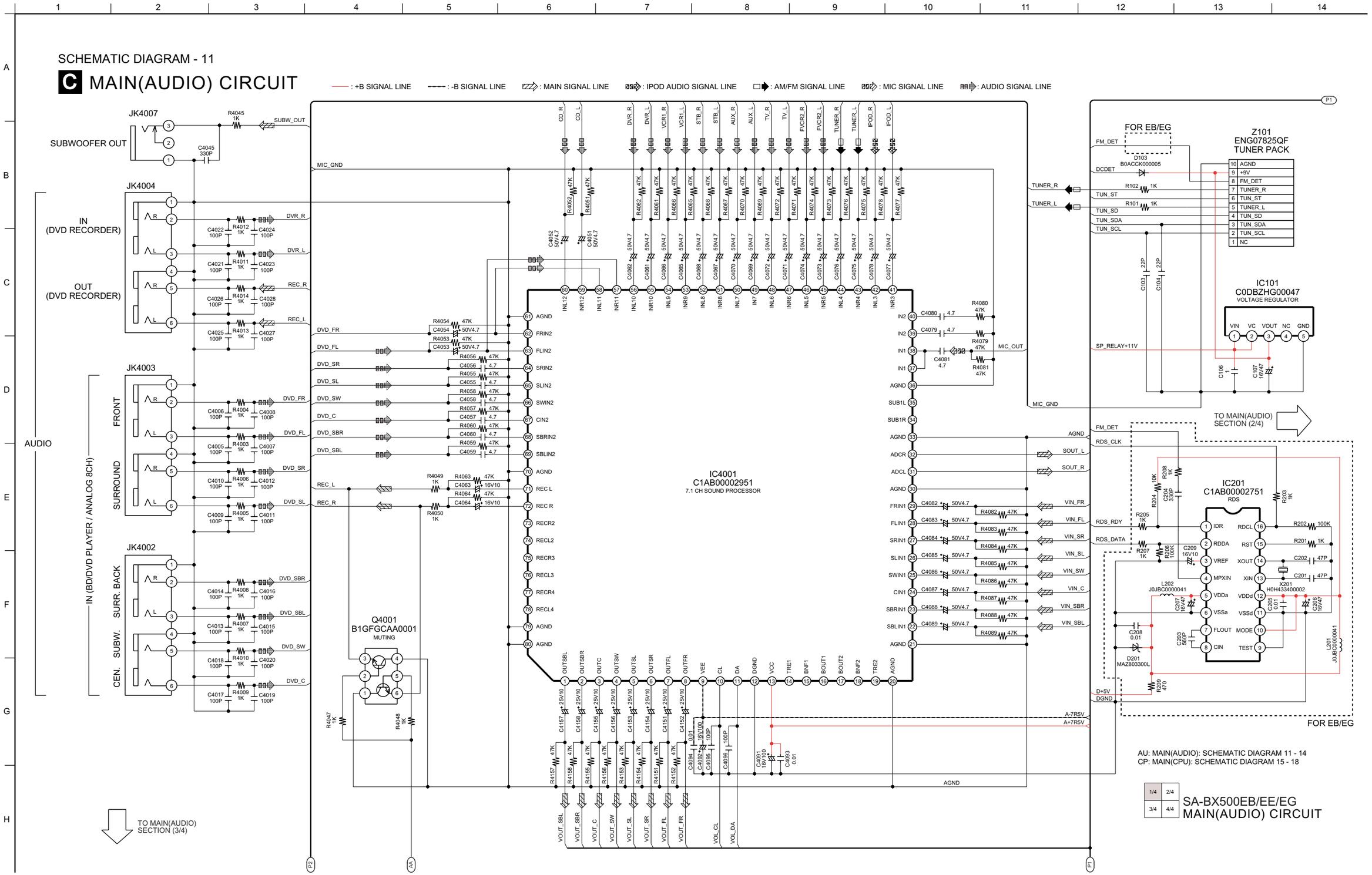

SCHEMATIC DIAGRAM - 12

# C MAIN(AUDIO) CIRCUIT

: +B SIGNAL LINE  : -B SIGNAL LINE  : MAIN SIGNAL LINE  : IPOD AUDIO SIGNAL LINE  : AM/FM SIGNAL LINE  : MIC SIGNAL LINE  : AUDIO SIGNAL LINE

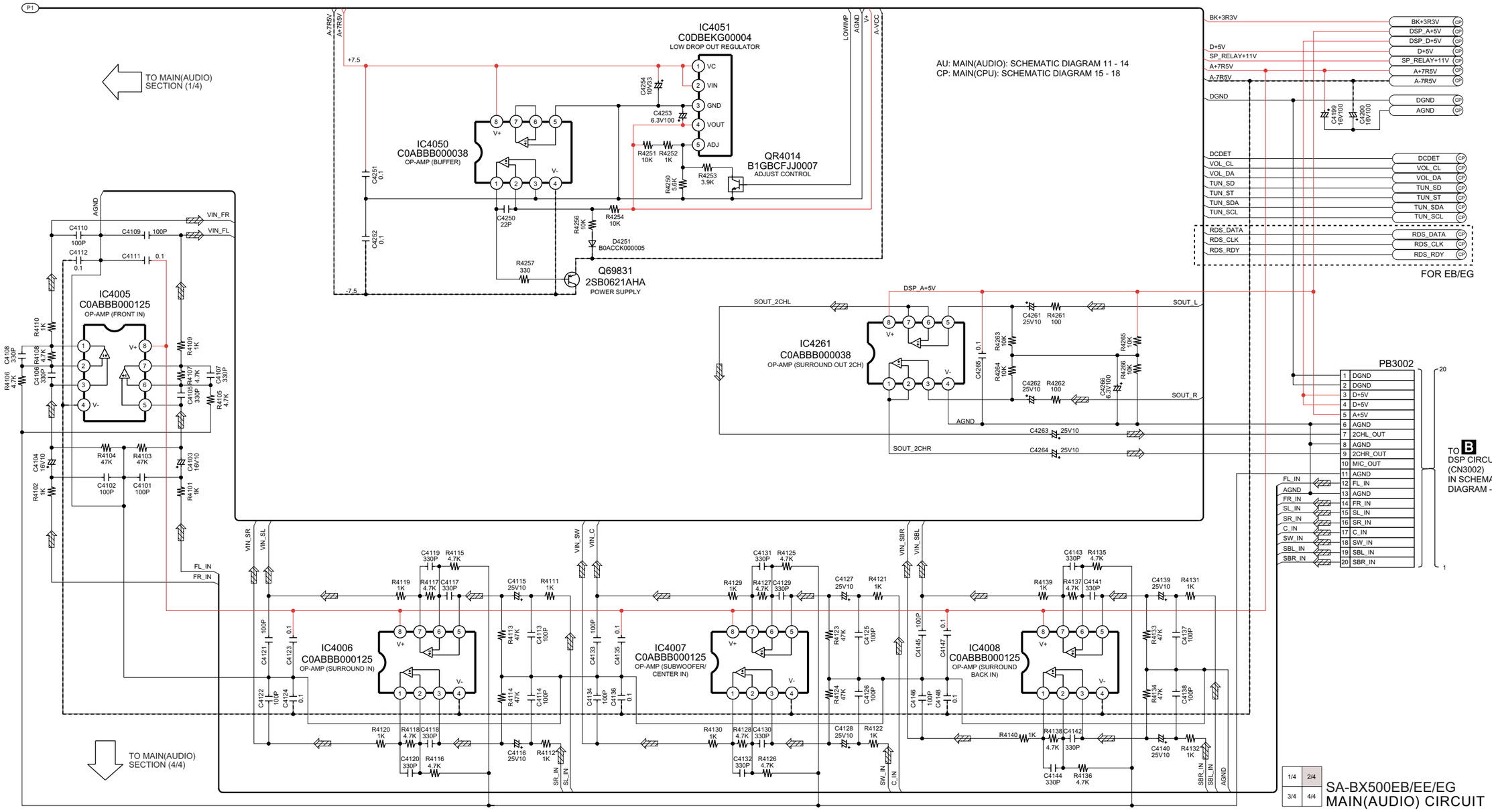

SCHEMATIC DIAGRAM - 13

# C MAIN(AUDIO) CIRCUIT

: +B SIGNAL LINE  : -B SIGNAL LINE  : MAIN SIGNAL LINE  : IPOD AUDIO SIGNAL LINE  : AM/FM SIGNAL LINE  : MIC SIGNAL LINE  : AUDIO SIGNAL LINE

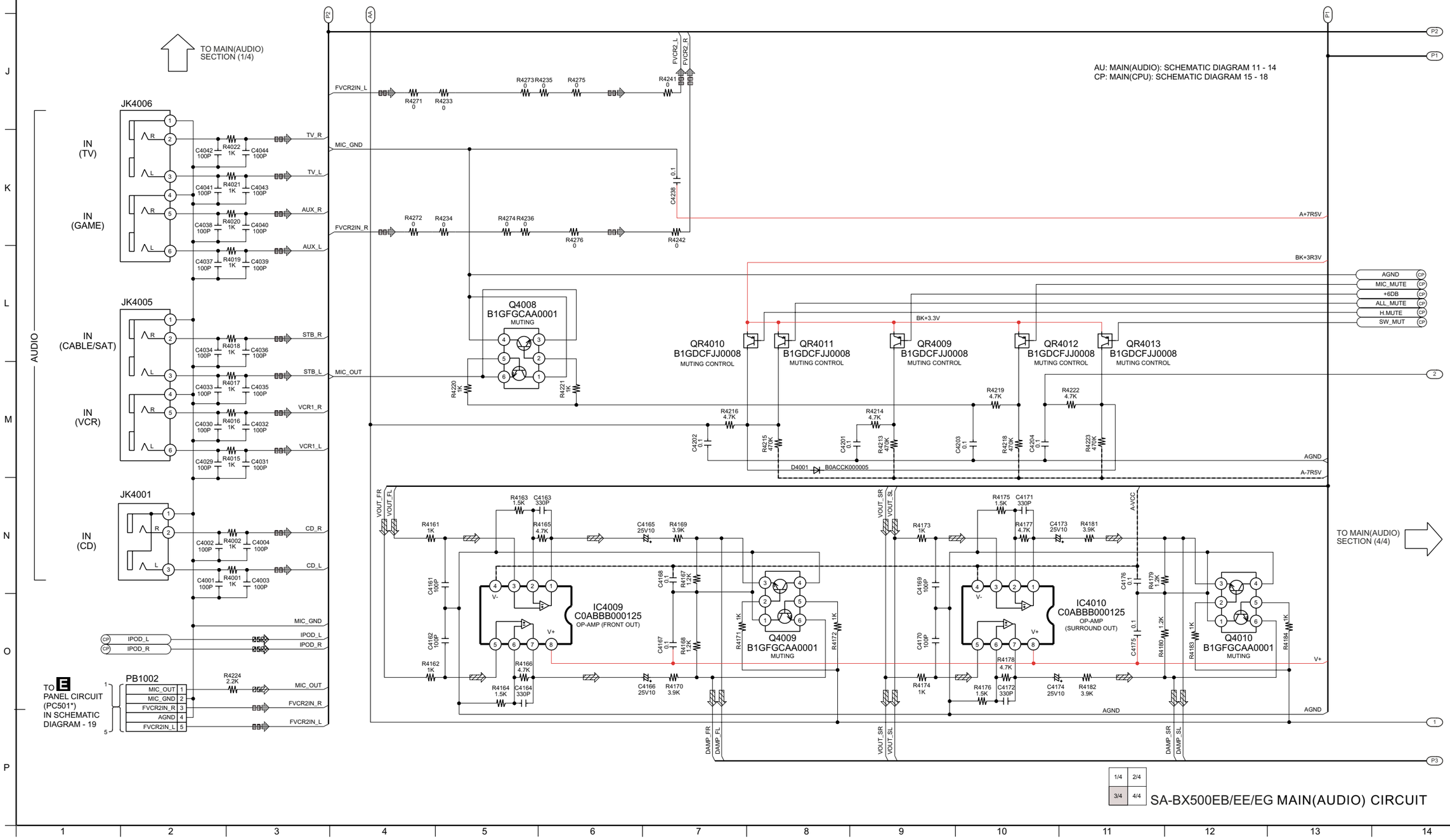


| 1/4 | 2/4 |
|---|---|
| 3/4 | 4/4 |

SA-BX500EB/EE/EG MAIN(AUDIO) CIRCUIT

SCHEMATIC DIAGRAM - 14

# C MAIN(AUDIO) CIRCUIT

: +B SIGNAL LINE  : -B SIGNAL LINE  : MAIN SIGNAL LINE  : IPOD AUDIO SIGNAL LINE  : AM/FM SIGNAL LINE  : MIC SIGNAL LINE  : AUDIO SIGNAL LINE

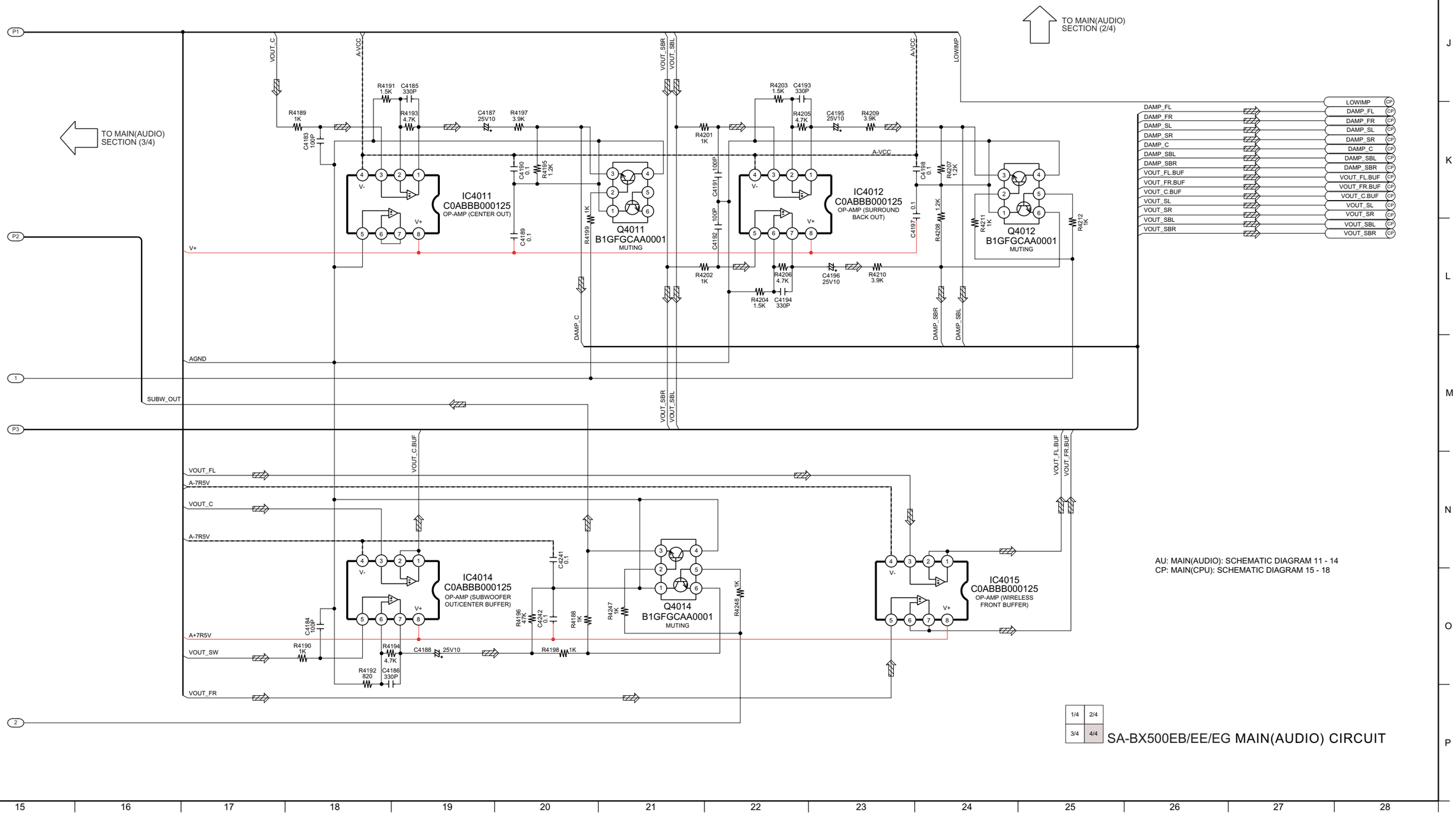


AU: MAIN(AUDIO): SCHEMATIC DIAGRAM 11 - 14
CP: MAIN(CPU): SCHEMATIC DIAGRAM 15 - 18

| 1/4 | 2/4 |
|---|---|
| 3/4 | 4/4 |

SA-BX500EB/EE/EG MAIN(AUDIO) CIRCUIT

SCHEMATIC DIAGRAM - 15

# C MAIN(CPU) CIRCUIT

: +B SIGNAL LINE  : -B SIGNAL LINE  : MAIN SIGNAL LINE  : IPOD AUDIO SIGNAL LINE

AU: MAIN(AUDIO): SCHEMATIC DIAGRAM 11 - 14
CP: MAIN(CPU): SCHEMATIC DIAGRAM 15 - 18

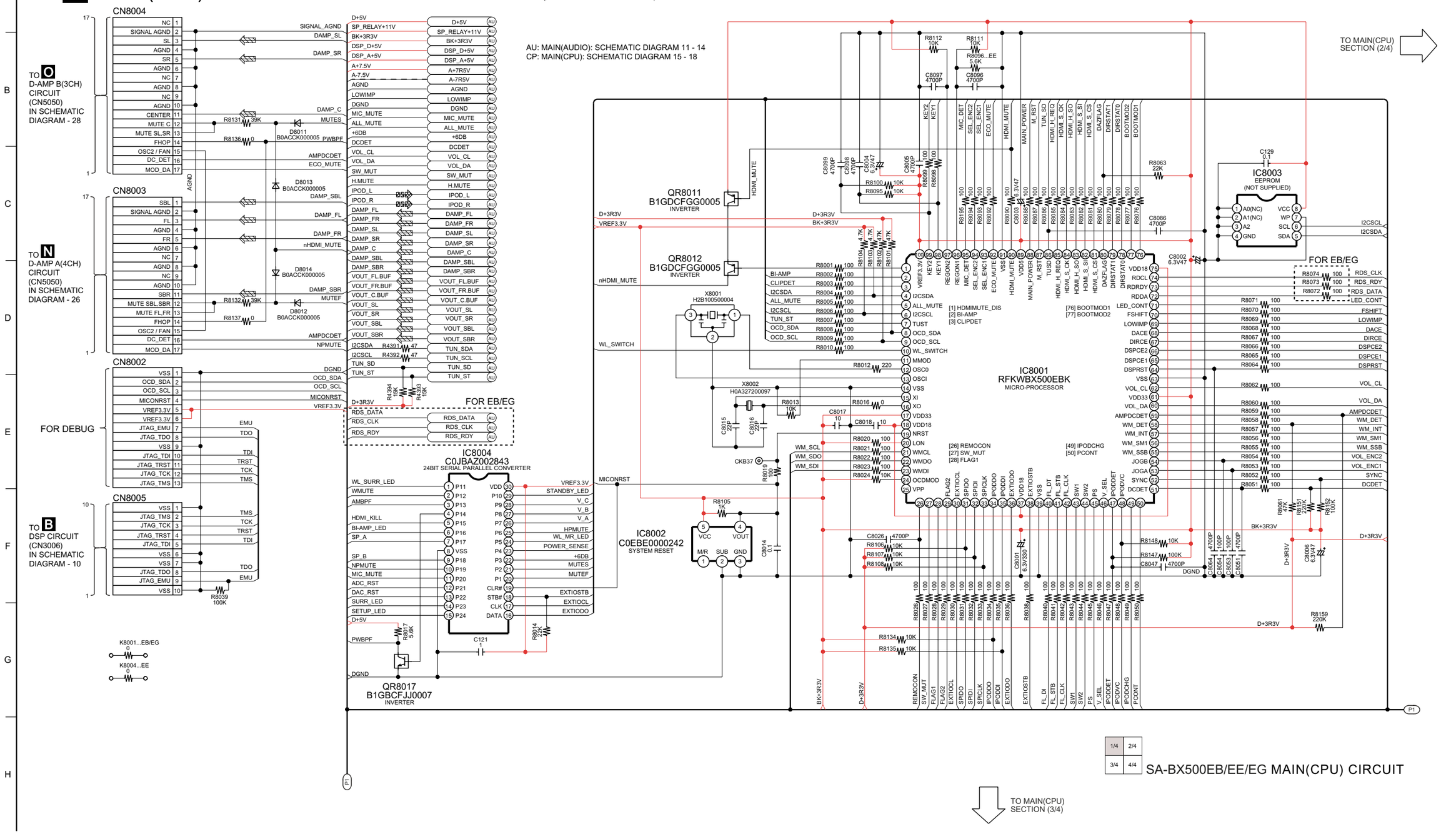


| 1/4 | 2/4 |
|---|---|
| 3/4 | 4/4 |

SA-BX500EB/EE/EG MAIN(CPU) CIRCUIT

SCHEMATIC DIAGRAM - 16

# C MAIN(CPU) CIRCUIT

: +B SIGNAL LINE  : -B SIGNAL LINE  : MAIN SIGNAL LINE  : IPOD AUDIO SIGNAL LINE

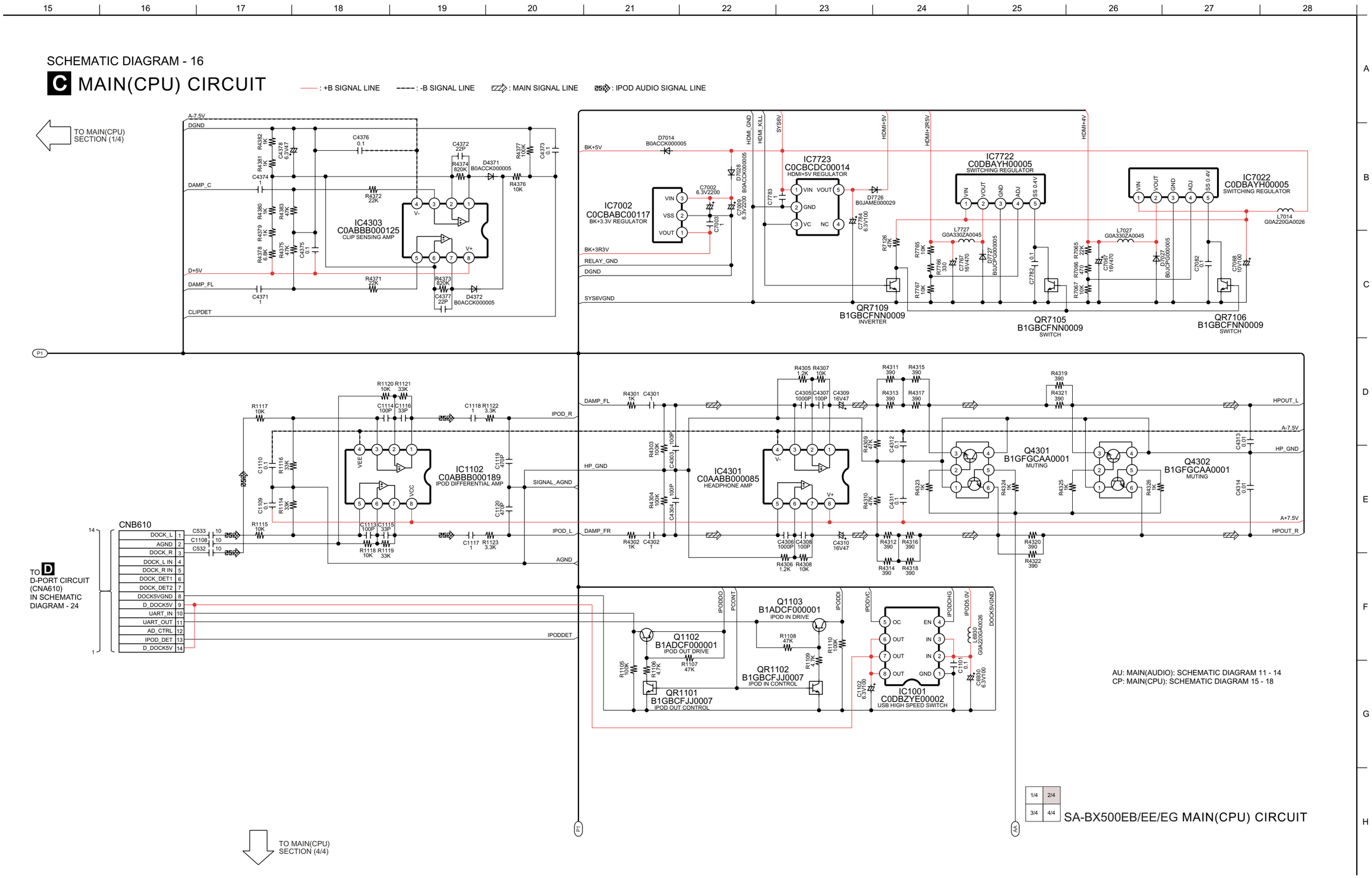

SCHEMATIC DIAGRAM - 17

# C MAIN(CPU) CIRCUIT

: +B SIGNAL LINE  : -B SIGNAL LINE  : MAIN SIGNAL LINE  : IPOD AUDIO SIGNAL LINE

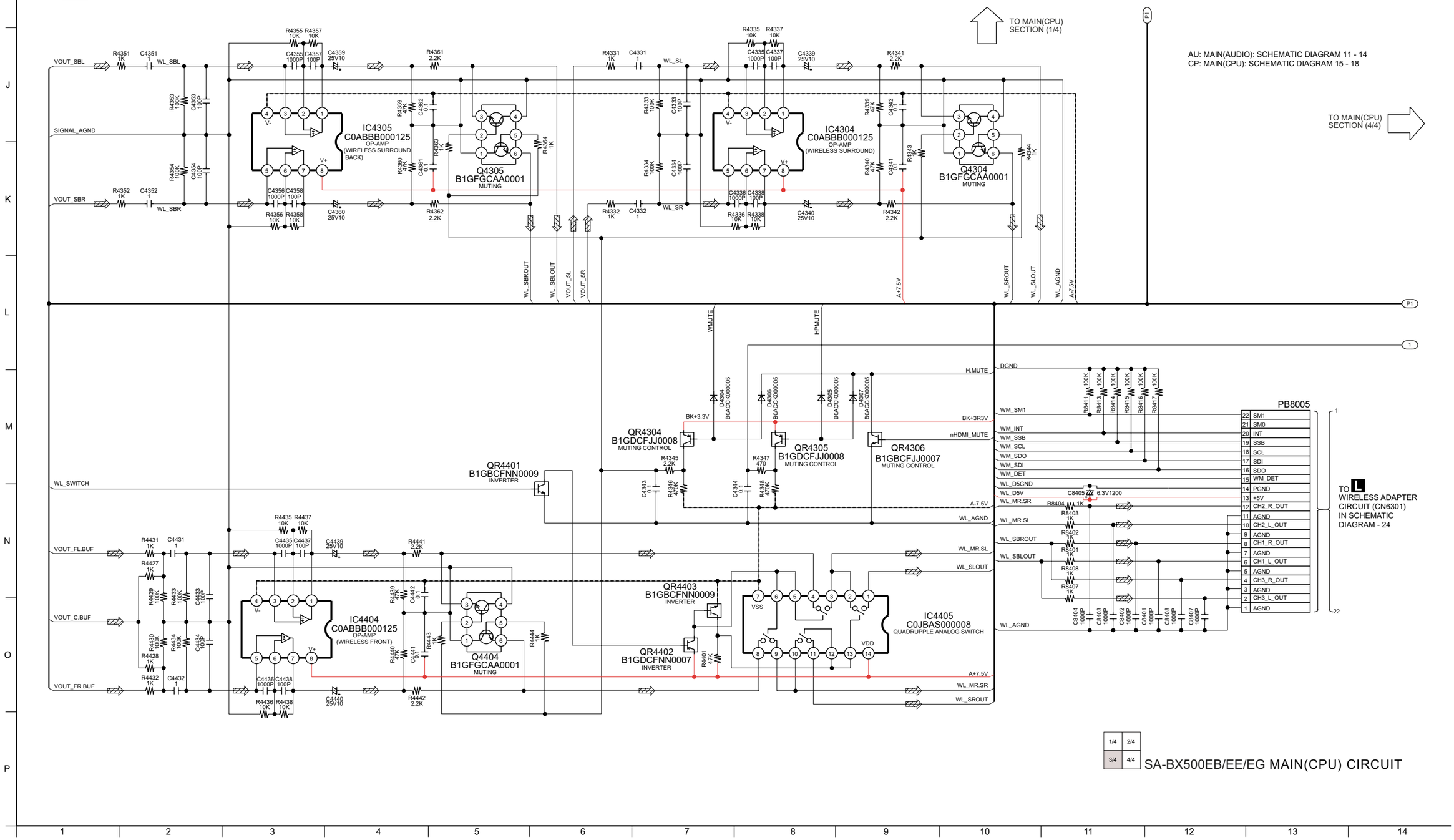


| 1/4 | 2/4 |
|---|---|
| 3/4 | 4/4 |

SA-BX500EB/EE/EG MAIN(CPU) CIRCUIT

SCHEMATIC DIAGRAM - 18

# C MAIN(CPU) CIRCUIT

: +B SIGNAL LINE  : -B SIGNAL LINE  : MAIN SIGNAL LINE  : IPOD AUDIO SIGNAL LINE

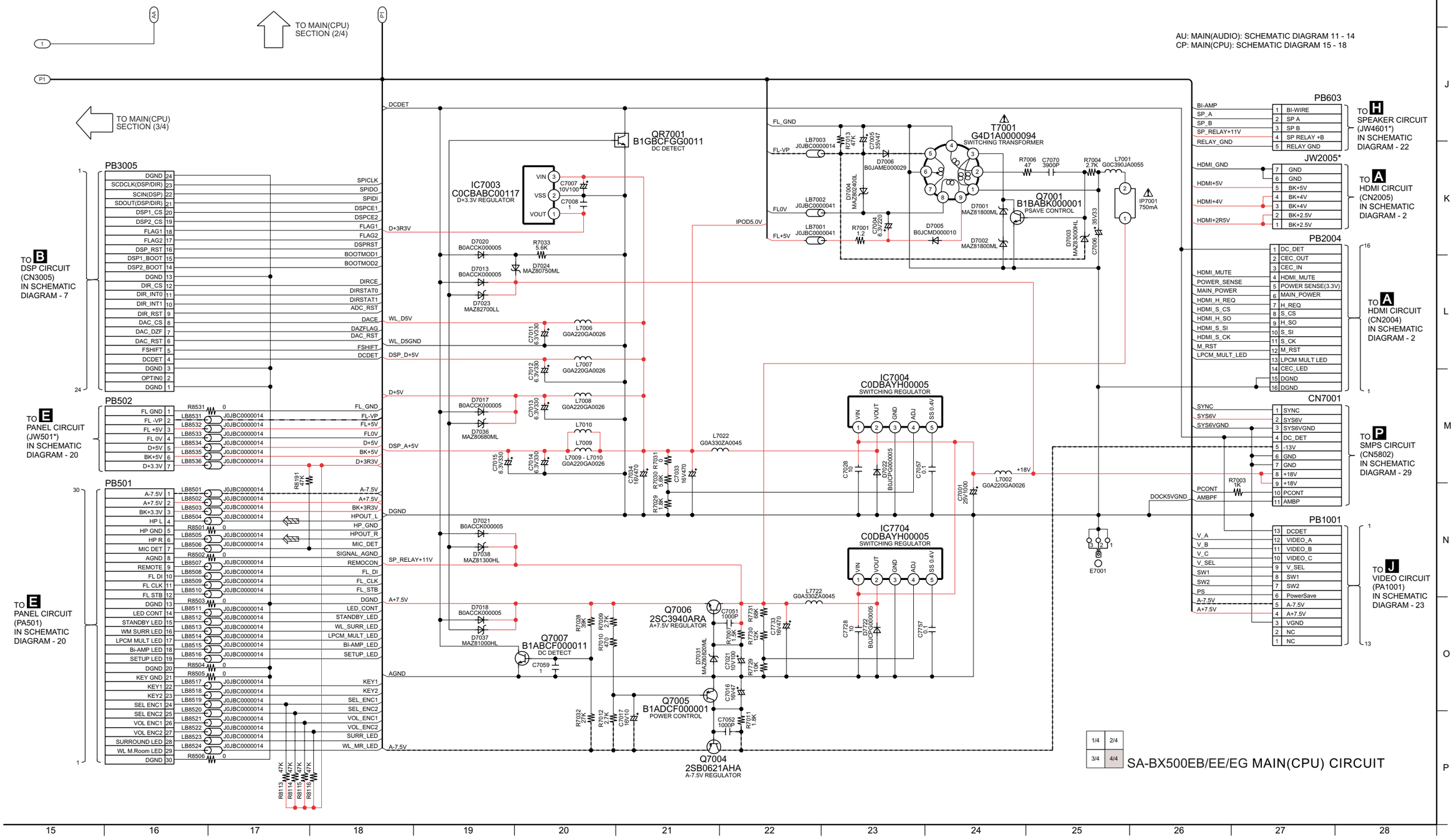

## 13.4. Panel Circuit

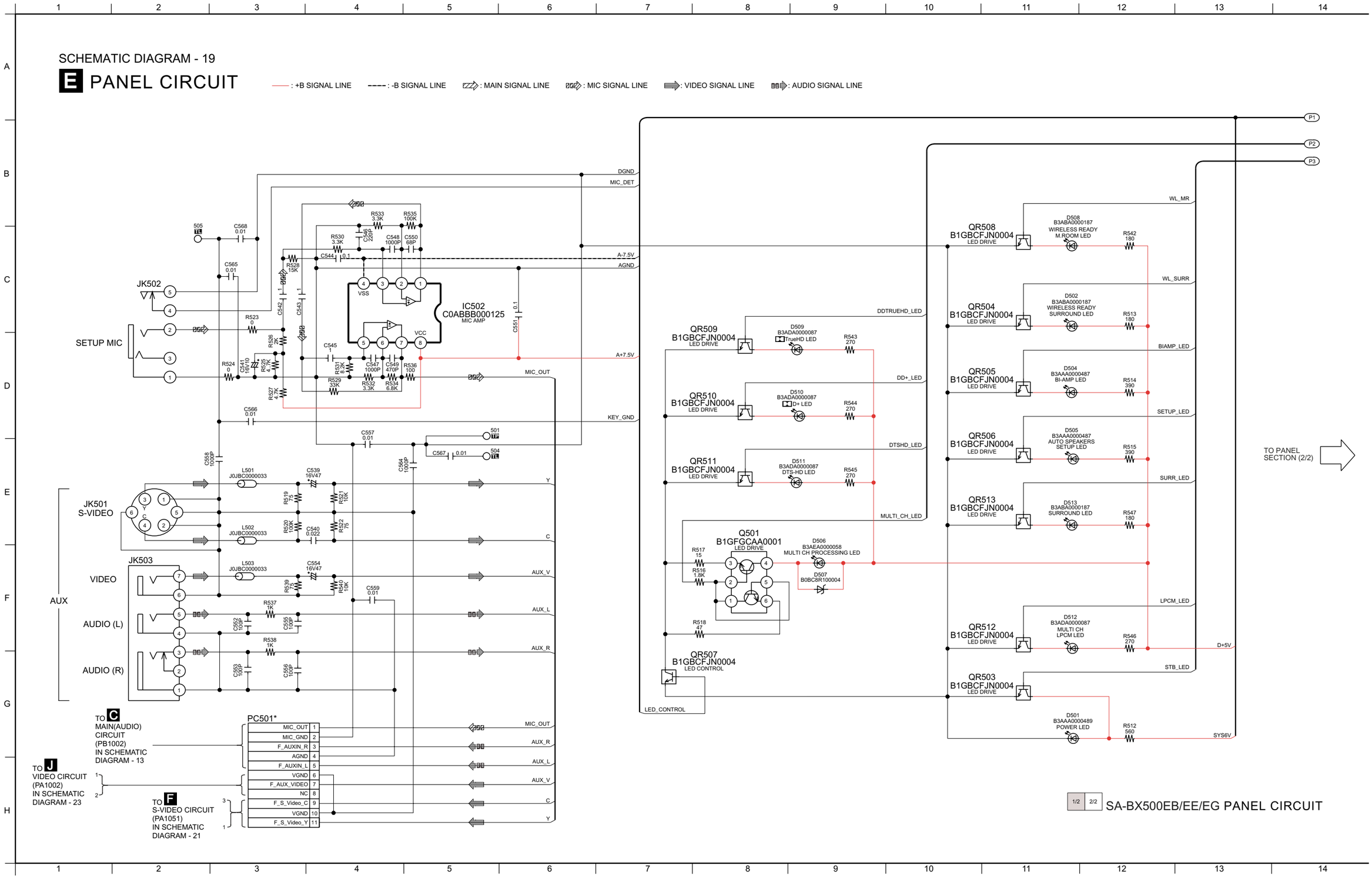

SCHEMATIC DIAGRAM - 20

# E PANEL CIRCUIT

: +B SIGNAL LINE  : -B SIGNAL LINE  : MAIN SIGNAL LINE  : MIC SIGNAL LINE  : VIDEO SIGNAL LINE  : AUDIO SIGNAL LINE

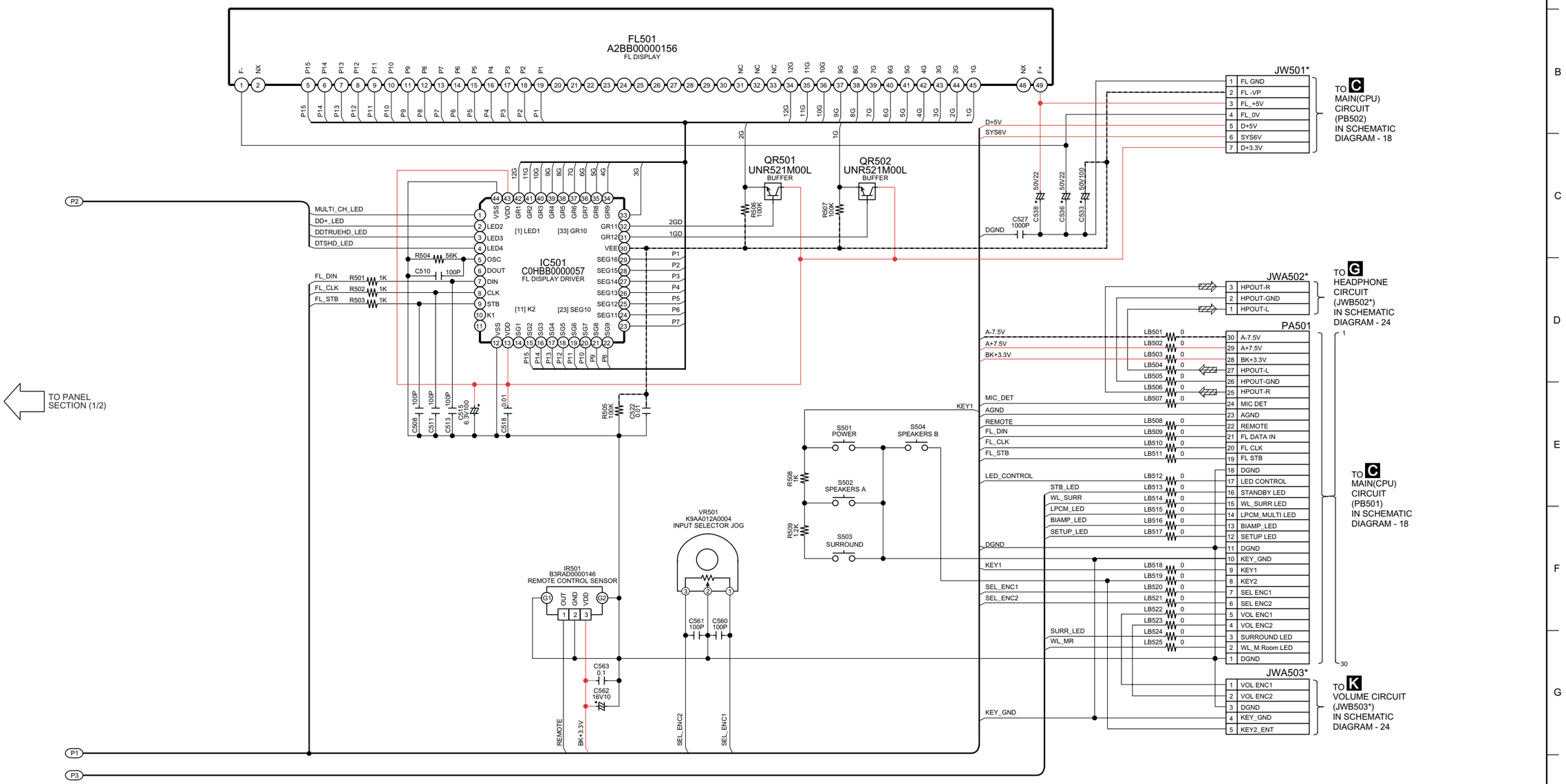


1/2 2/2 SA-BX500EB/EE/EG PANEL CIRCUIT

## 13.5. S-Video Circuit

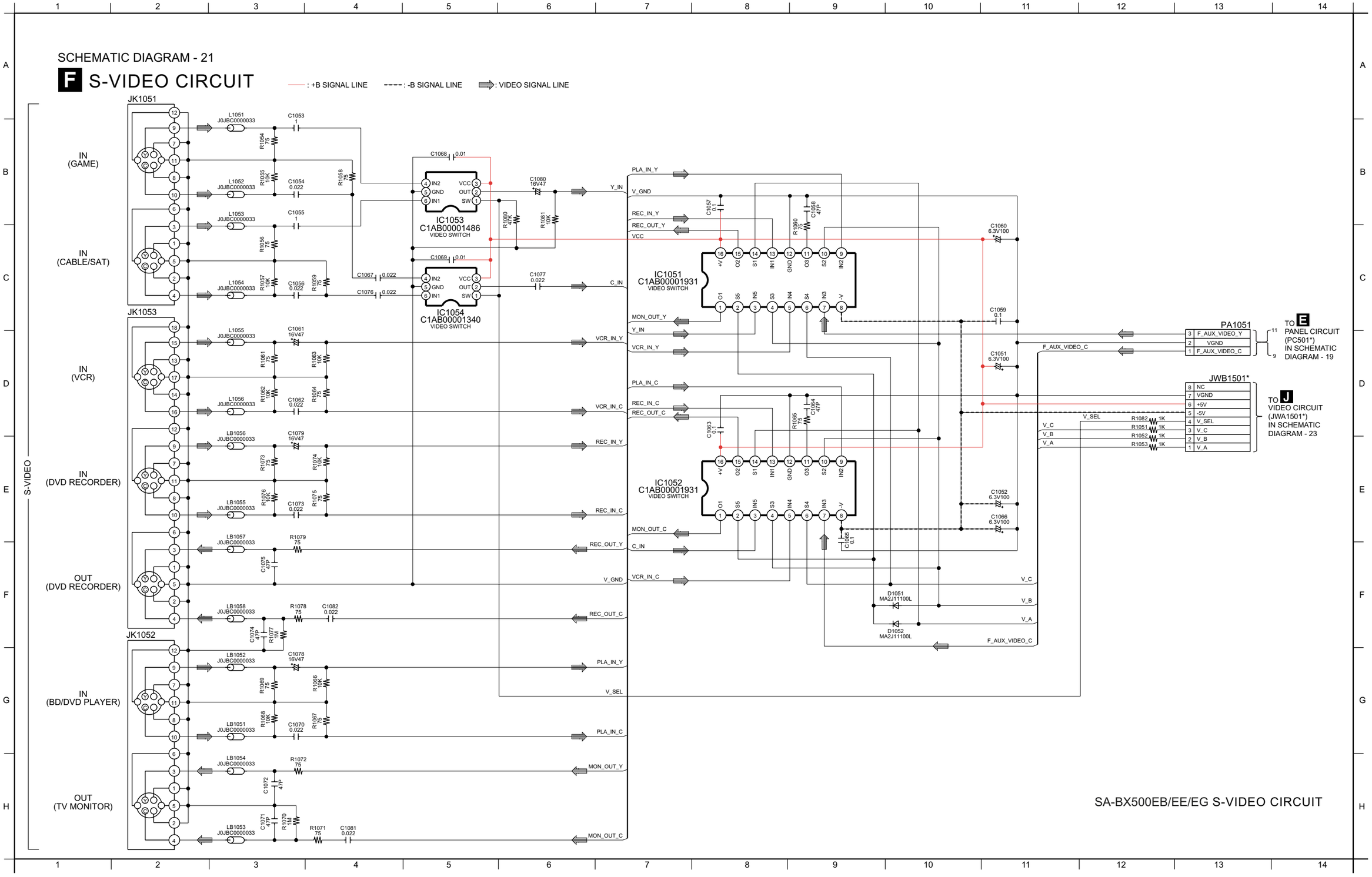

## 13.6. Speaker Circuit

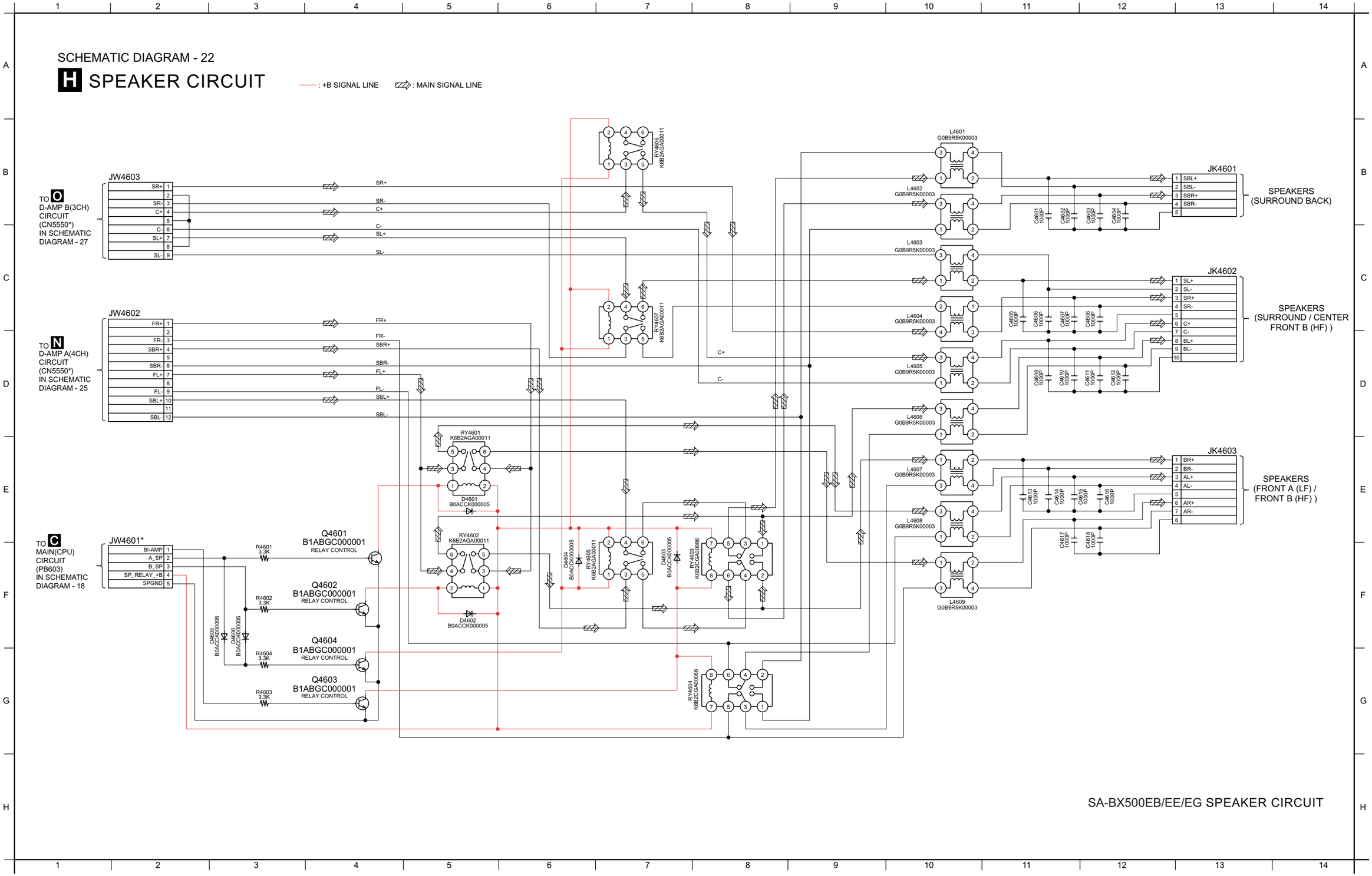

## 13.7. Video Circuit

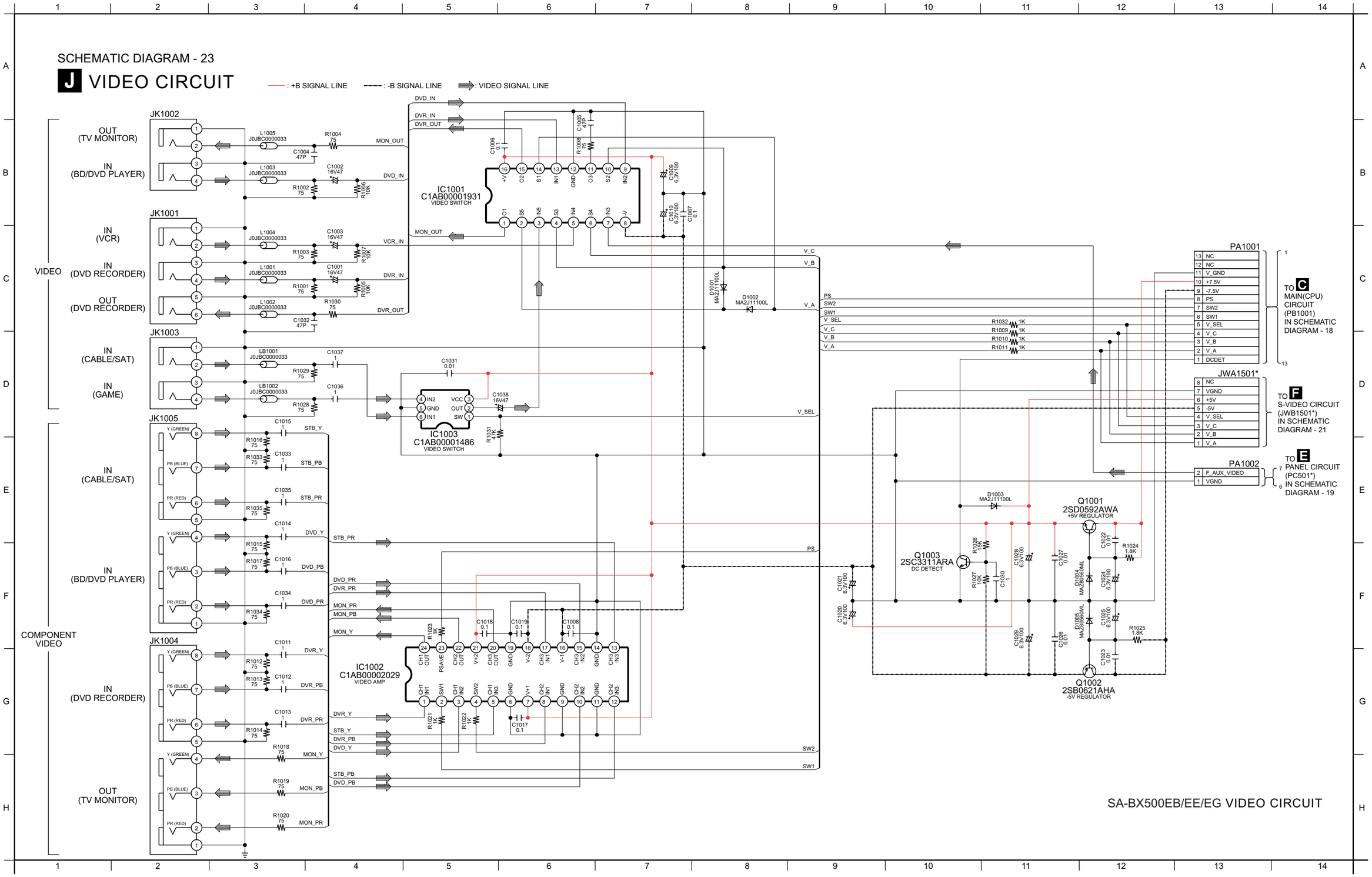

## 13.8. D-Port, Headphone, Digital, Volume, Wireless Adapter, Fan Circuit

SCHEMATIC DIAGRAM - 24

### D D-PORT CIRCUIT

: +B SIGNAL LINE  : IPOD AUDIO SIGNAL LINE

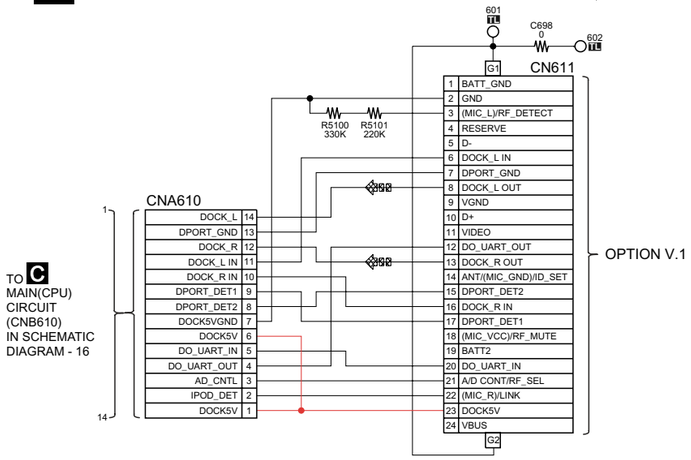


### G HEADPHONE CIRCUIT

: MAIN SIGNAL LINE

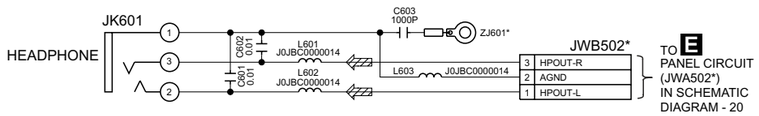


### I DIGITAL CIRCUIT

: +B SIGNAL LINE  : AUDIO SIGNAL LINE

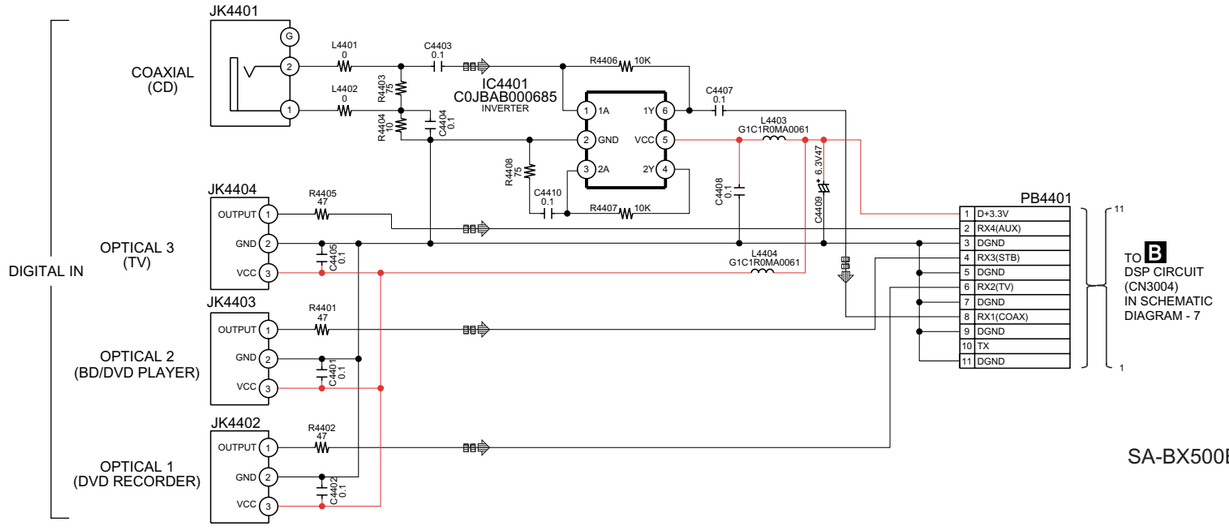


### K VOLUME CIRCUIT

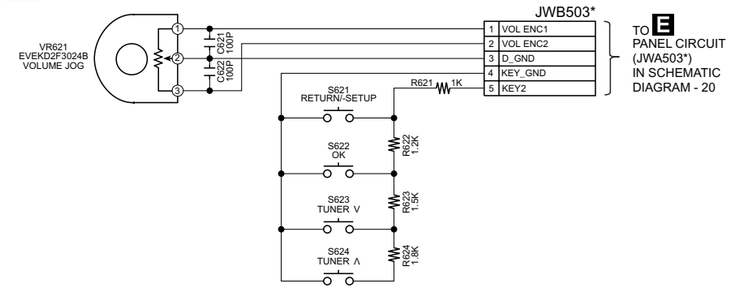


### L WIRELESS ADAPTER CIRCUIT

: +B SIGNAL LINE  : MAIN SIGNAL LINE

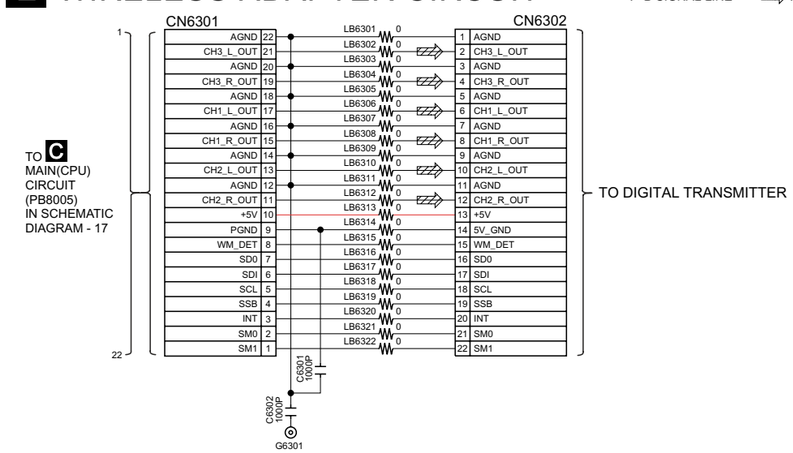


### M FAN CIRCUIT

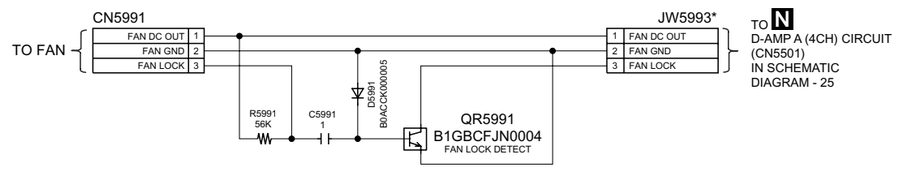


SA-BX500EB/EE/EG D-PORT / HEADPHONE / DIGITAL / VOLUME / WIRELESS ADAPTER / FAN CIRCUIT

## 13.9. D-Amp A (4CH) Circuit

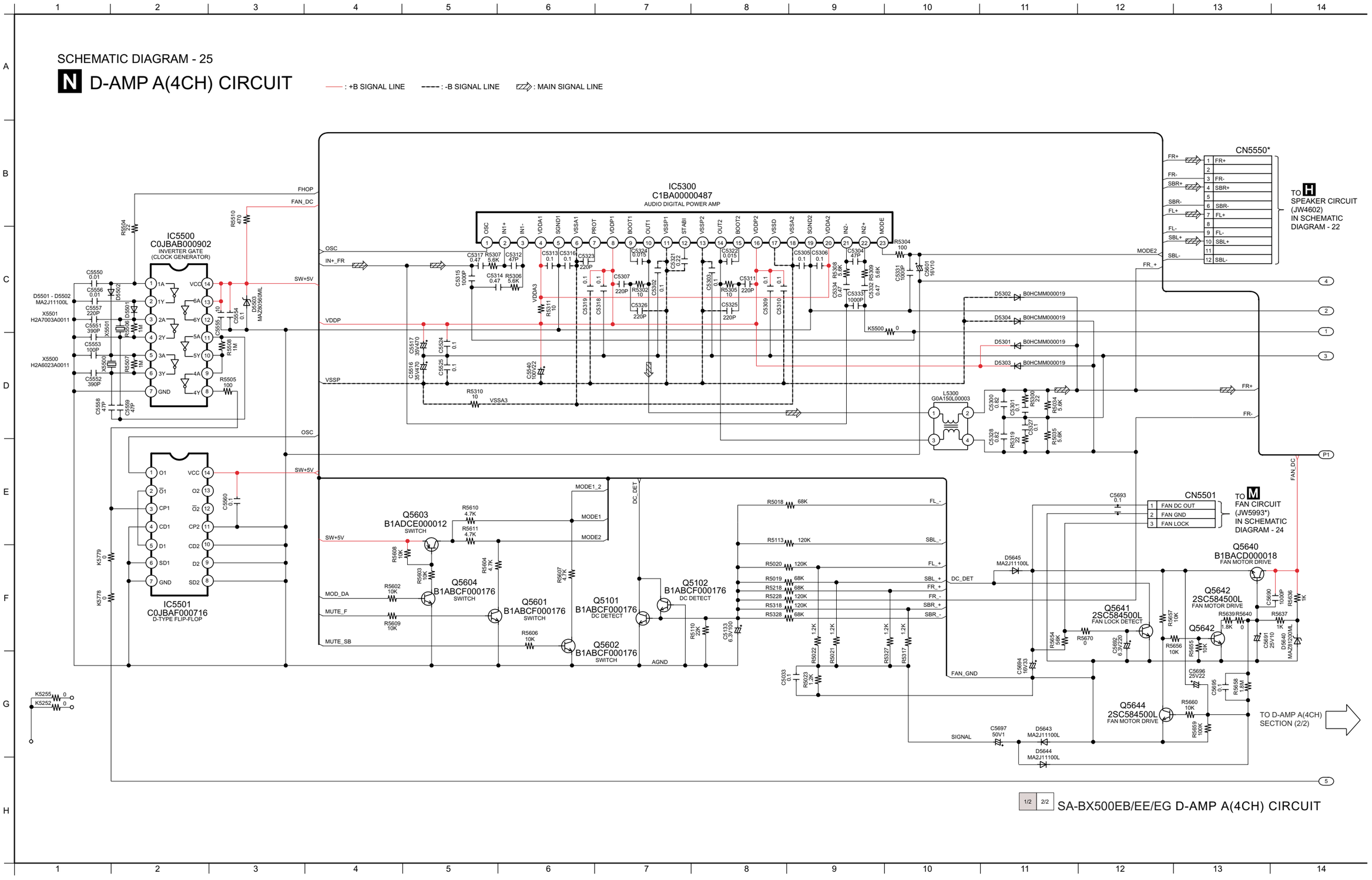

SCHEMATIC DIAGRAM - 26

# N D-AMP A(4CH) CIRCUIT

: +B SIGNAL LINE  : -B SIGNAL LINE  : MAIN SIGNAL LINE

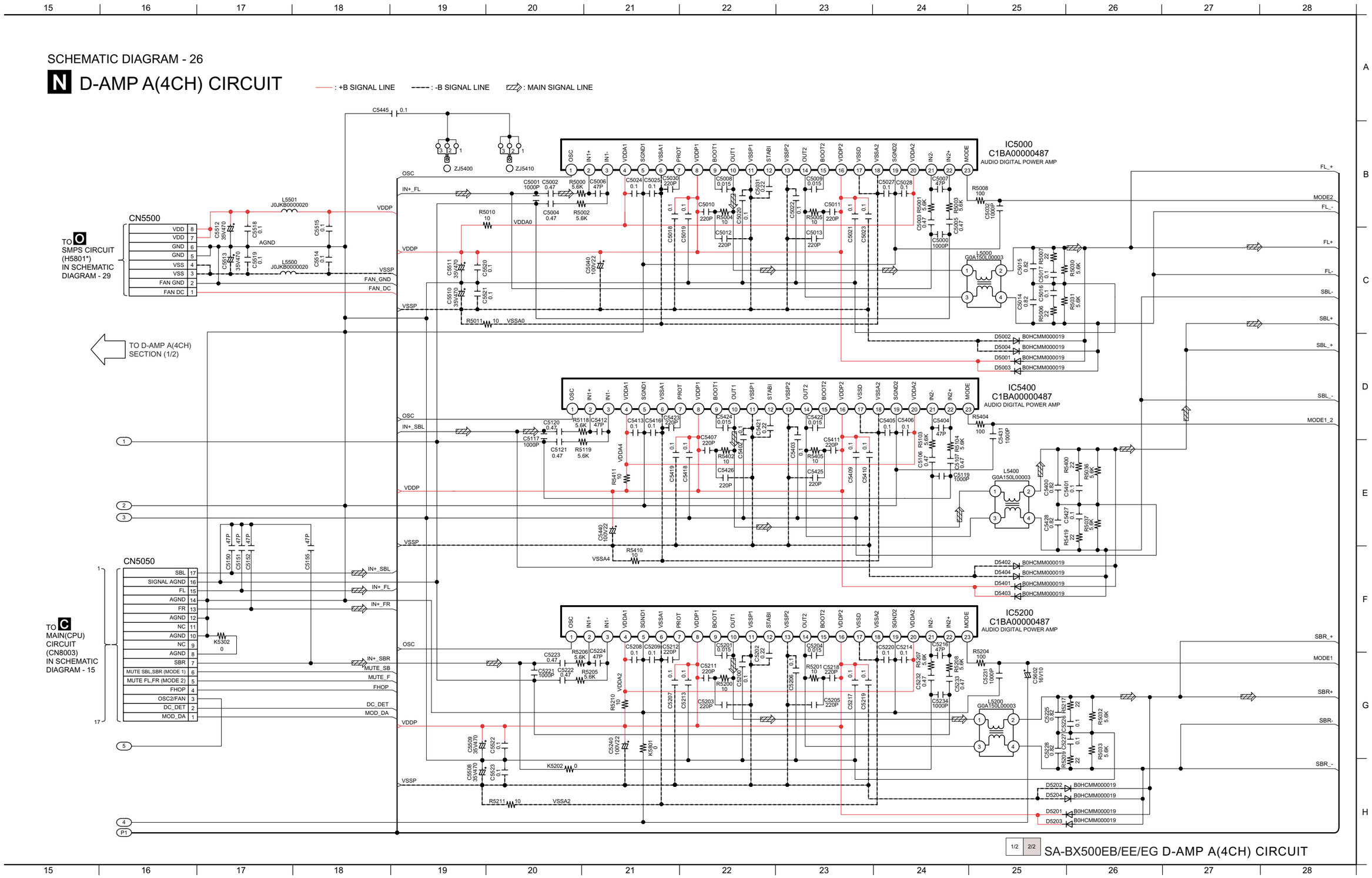


1/2 2/2 SA-BX500EB/EE/EG D-AMP A(4CH) CIRCUIT

## 13.10. D-Amp B (3CH) Circuit

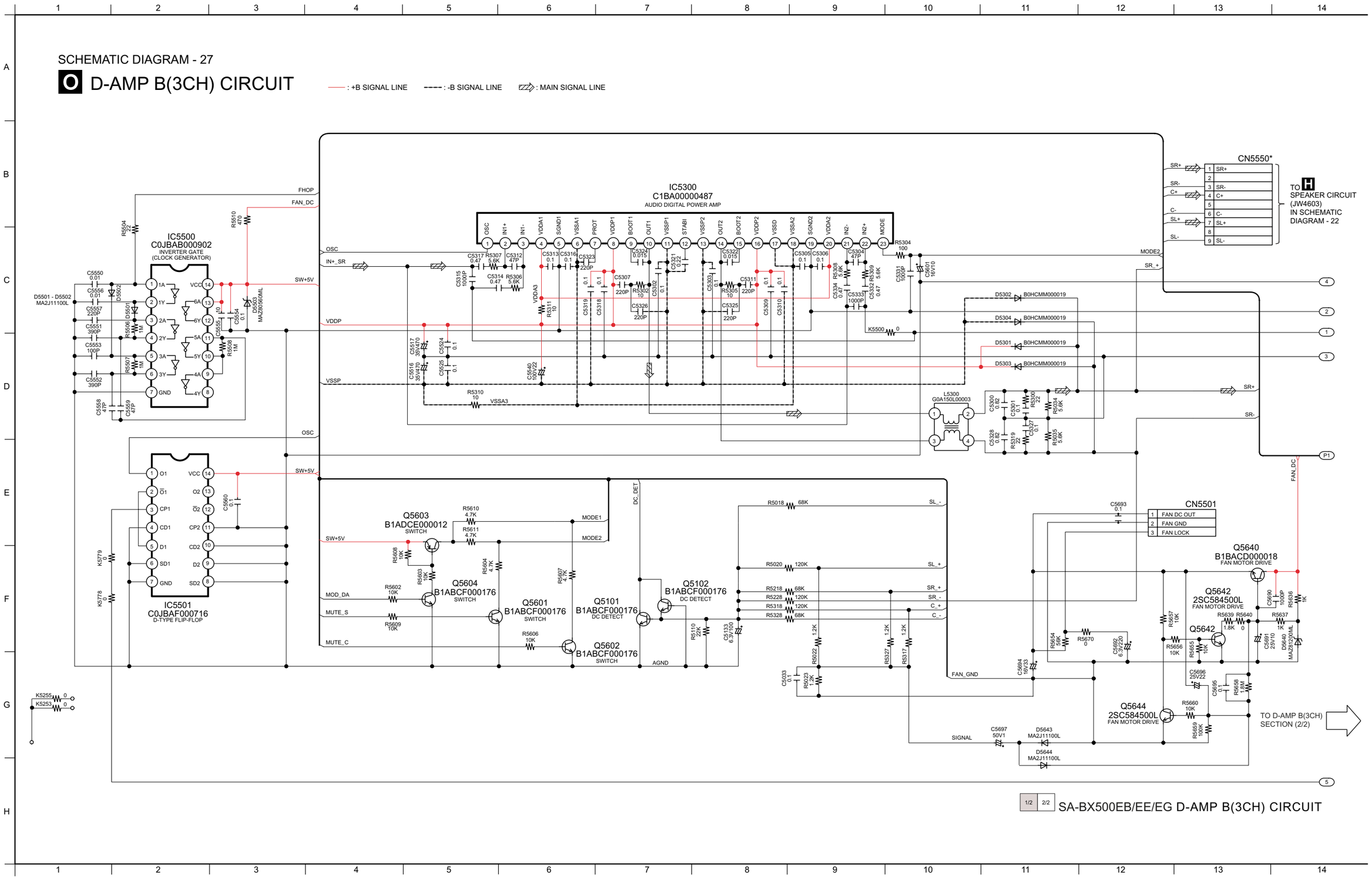

SCHEMATIC DIAGRAM - 28

# O D-AMP B(3CH) CIRCUIT

: +B SIGNAL LINE  : -B SIGNAL LINE  : MAIN SIGNAL LINE

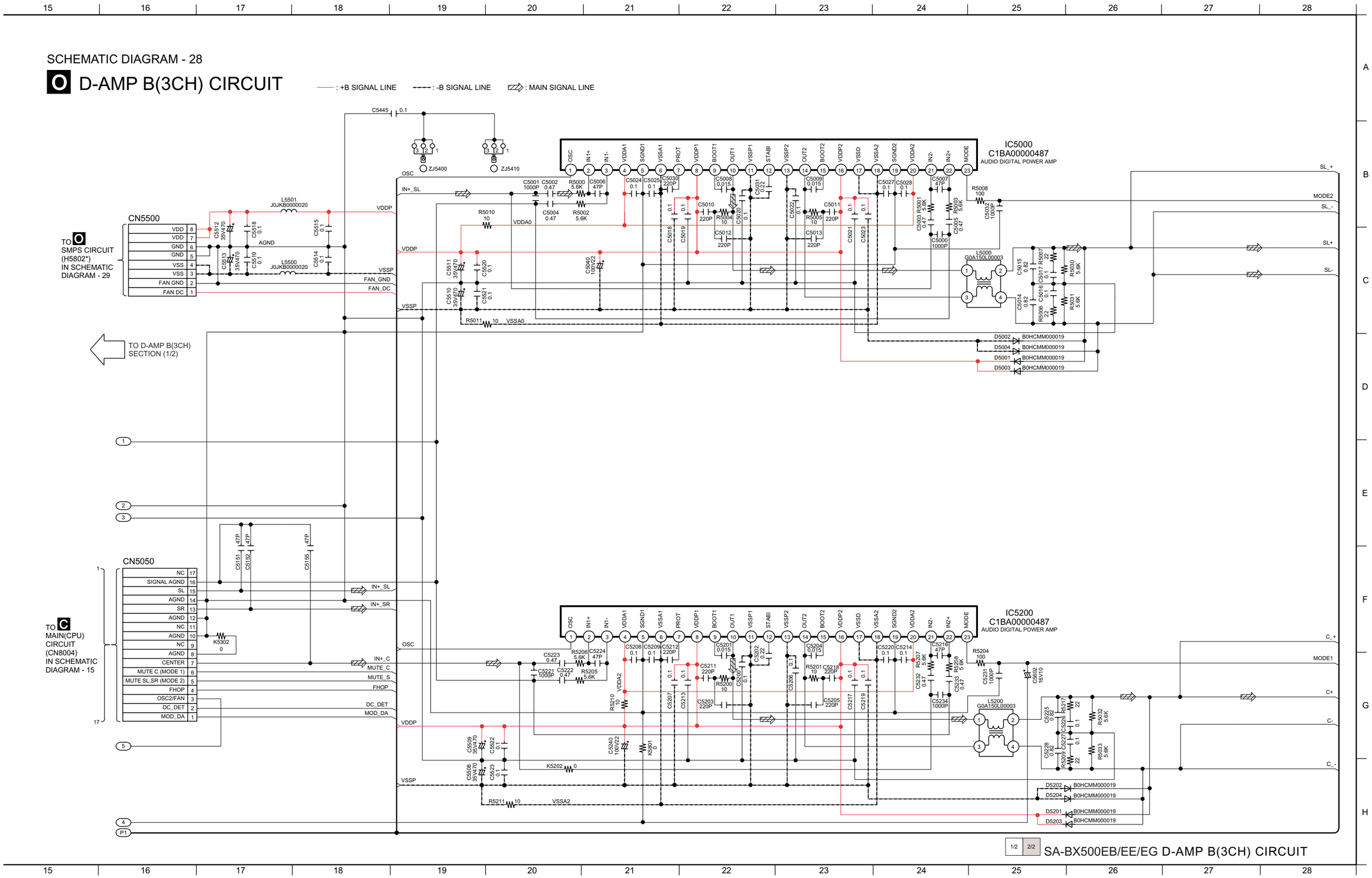


1/2 2/2 SA-BX500EB/EE/EG D-AMP B(3CH) CIRCUIT

## 13.11. SMPS Circuit

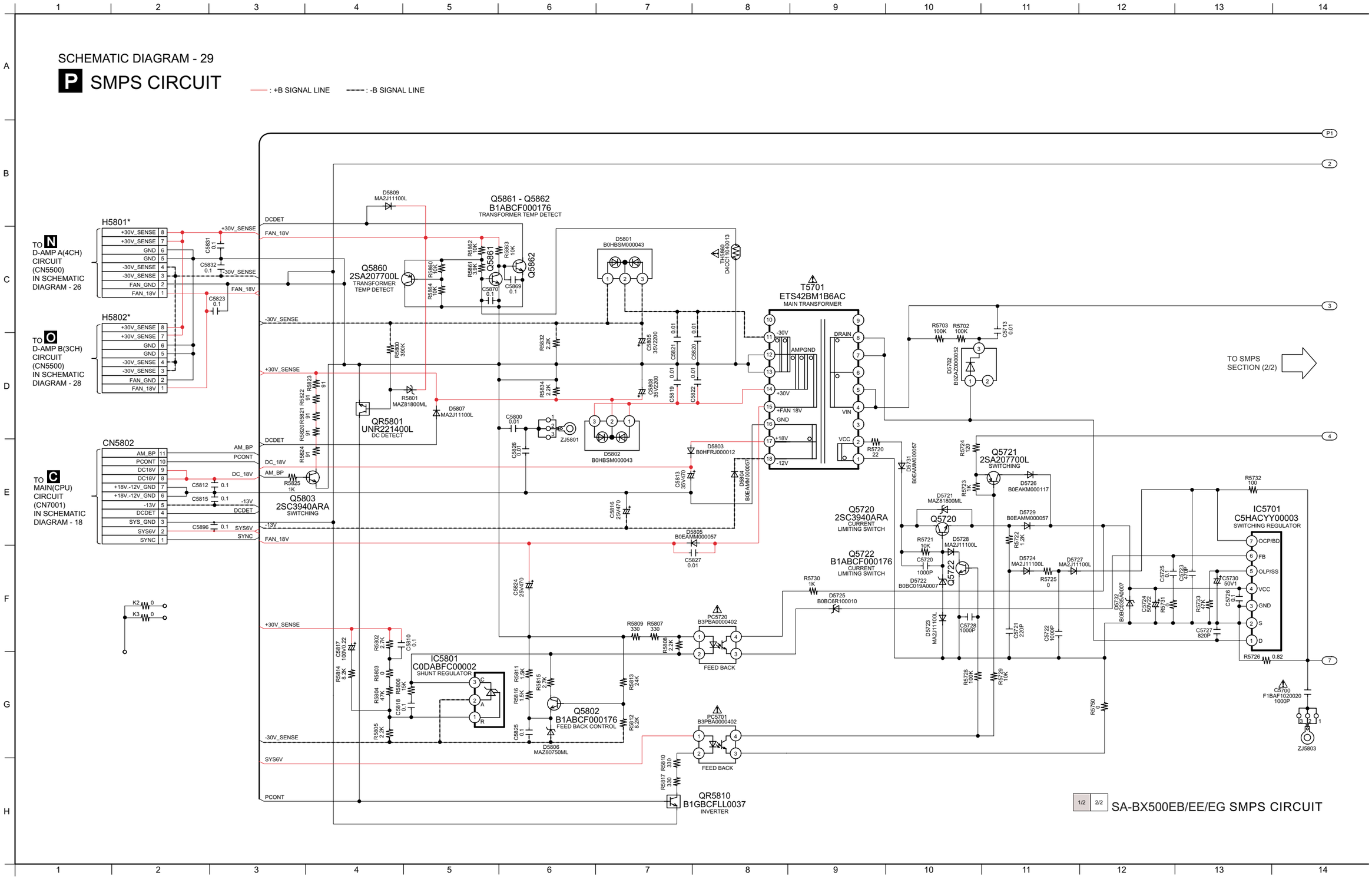

SCHEMATIC DIAGRAM - 30

# P SMPS CIRCUIT

: +B SIGNAL LINE  : -B SIGNAL LINE

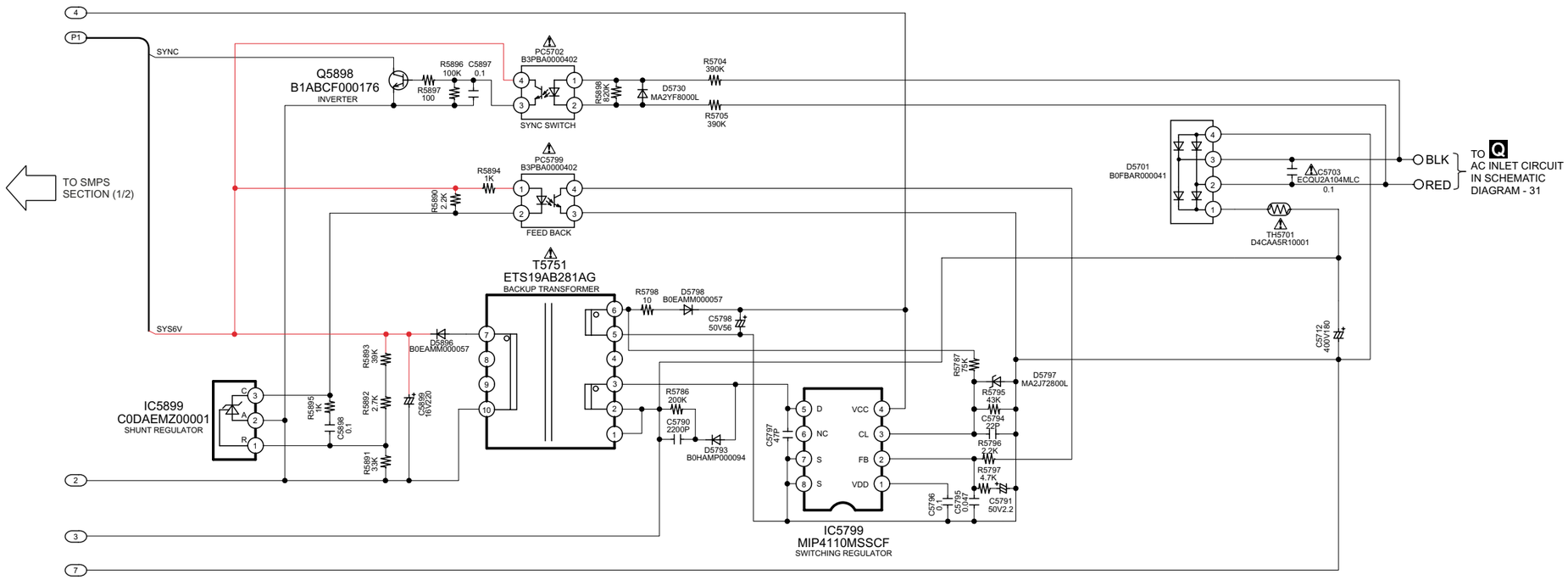


1/2 2/2 SA-BX500EB/EE/EG SMPS CIRCUIT

## 13.12. AC Inlet Circuit

SCHEMATIC DIAGRAM - 31

**Q** AC INLET CIRCUIT

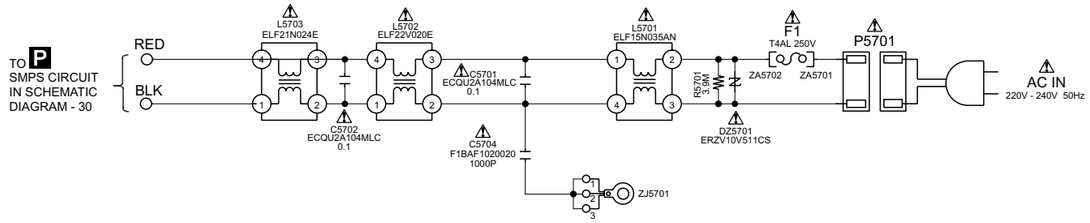


SA-BX500EB/EE/EG AC INLET CIRCUIT

# 14 Printed Circuit Board

## 14.1. HDMI P.C.B.

### A HDMI P.C.B. (REP4392A-T)

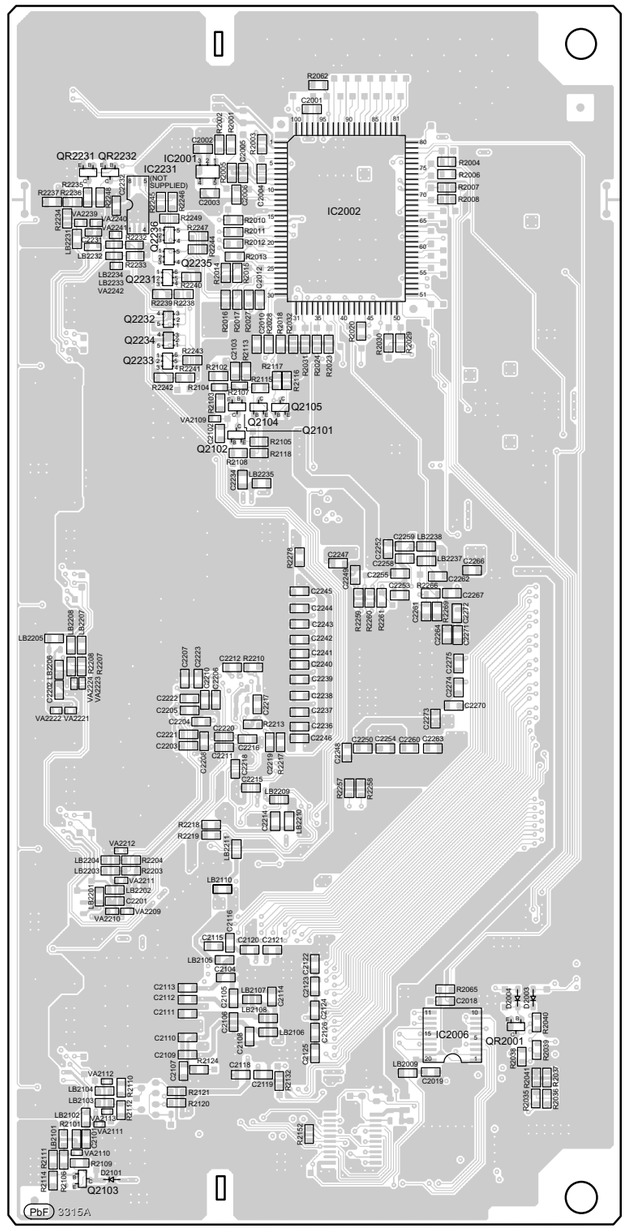


(SIDE A)

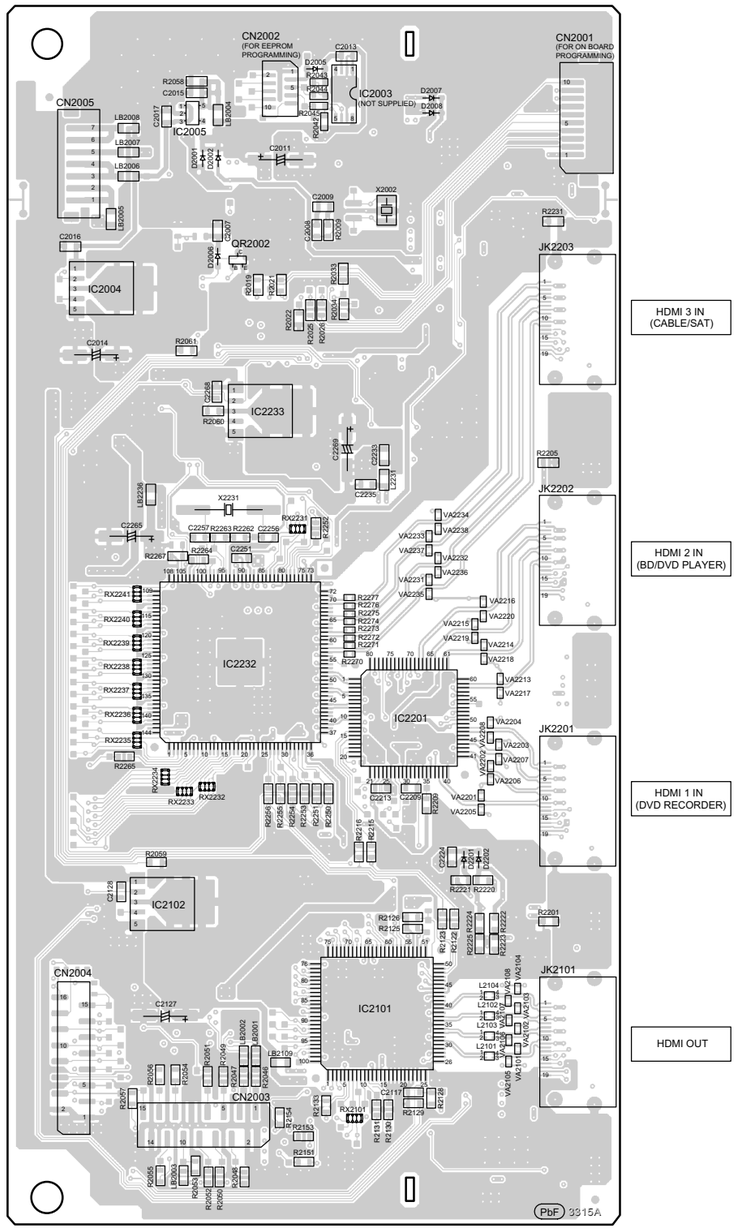


(SIDE B)

SA-BX500EB/EE/EG
HDMI P.C.B.

## 14.2. DSP P.C.B.

**B** DSP P.C.B. (REP4369B)

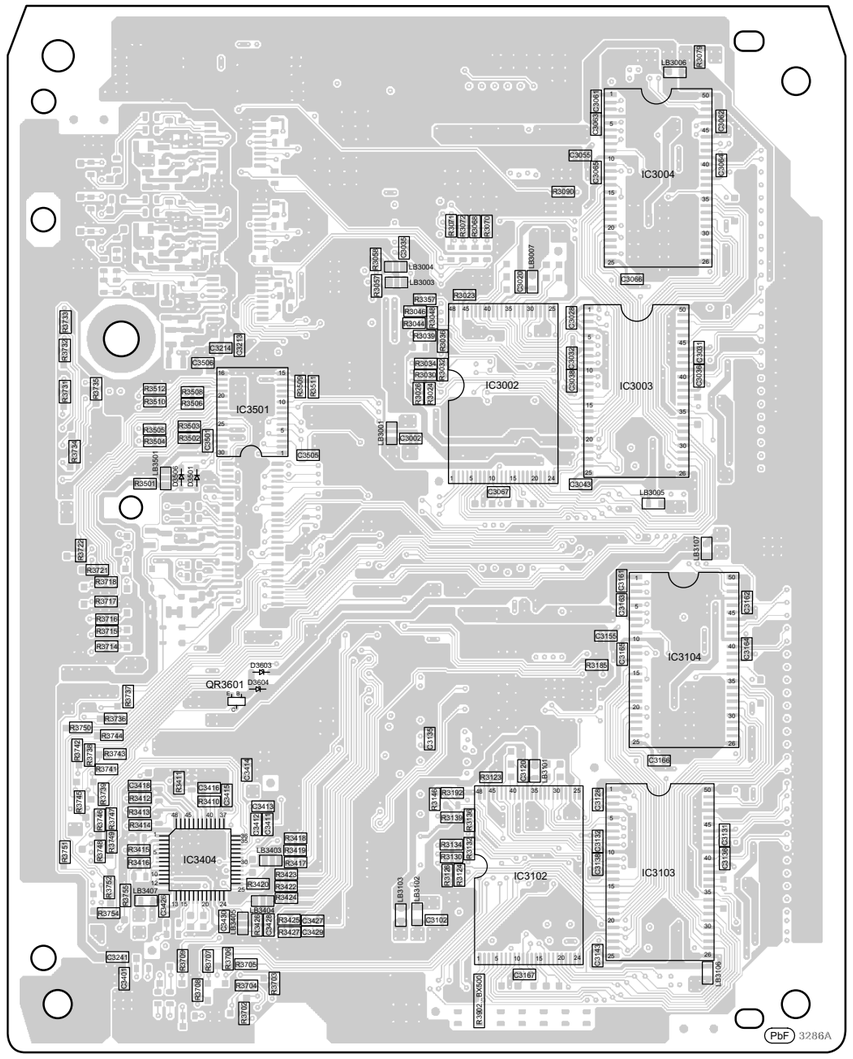


(SIDE A)

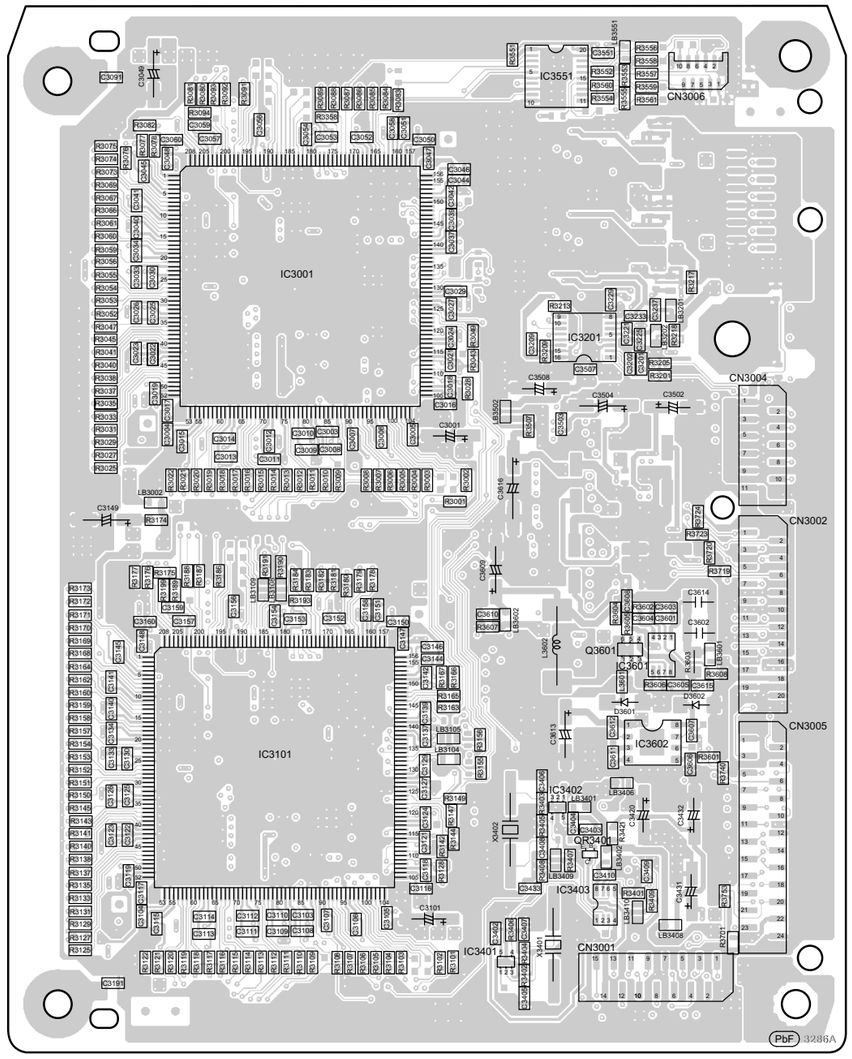


(SIDE B)

SA-BX500EB/EE/EG
DSP P.C.B.

## 14.3. Main P.C.B.

**C** MAIN P.C.B. (REP4337A-M...EB/EG)
(REP4337D-M...EE)

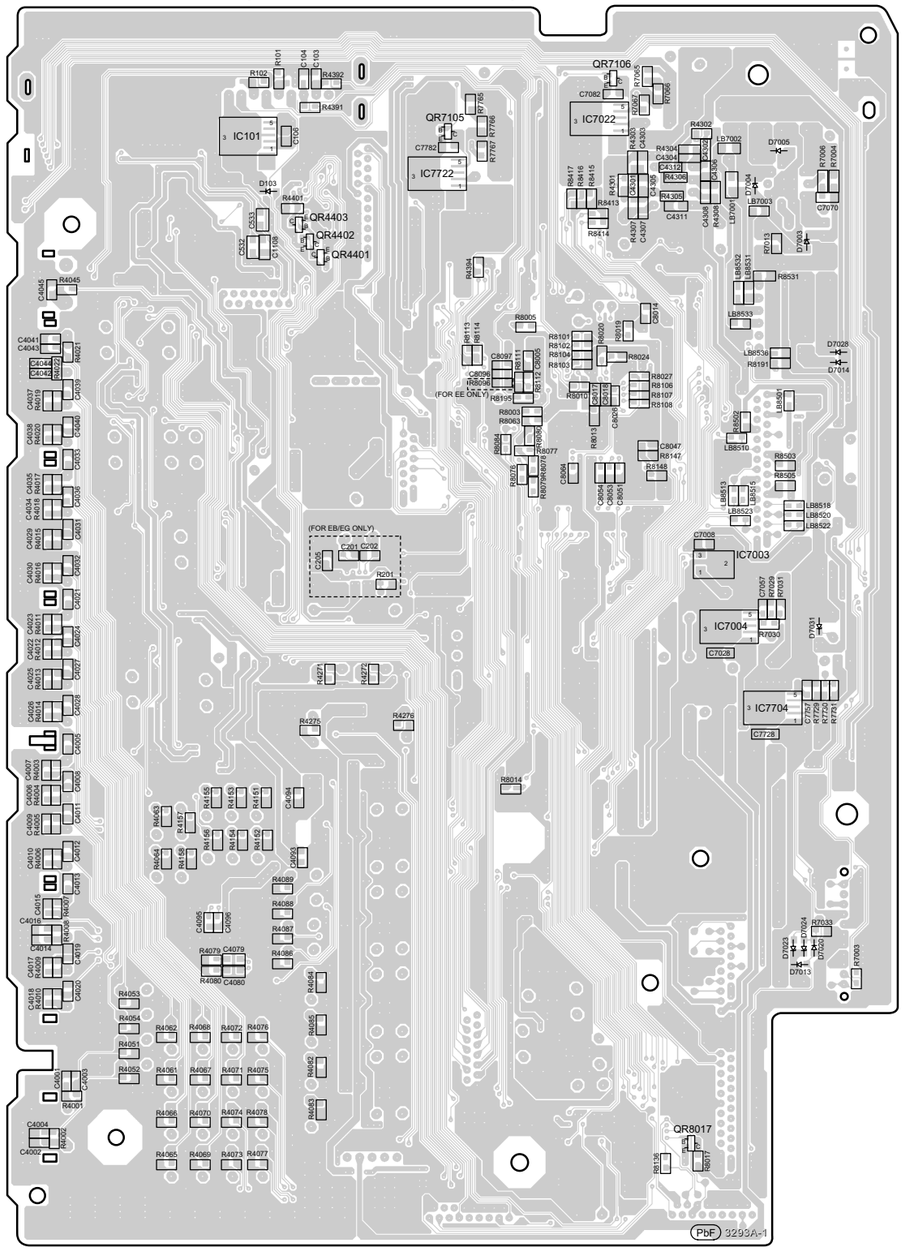

(SIDE A)
* FOR INDICATION ONLY

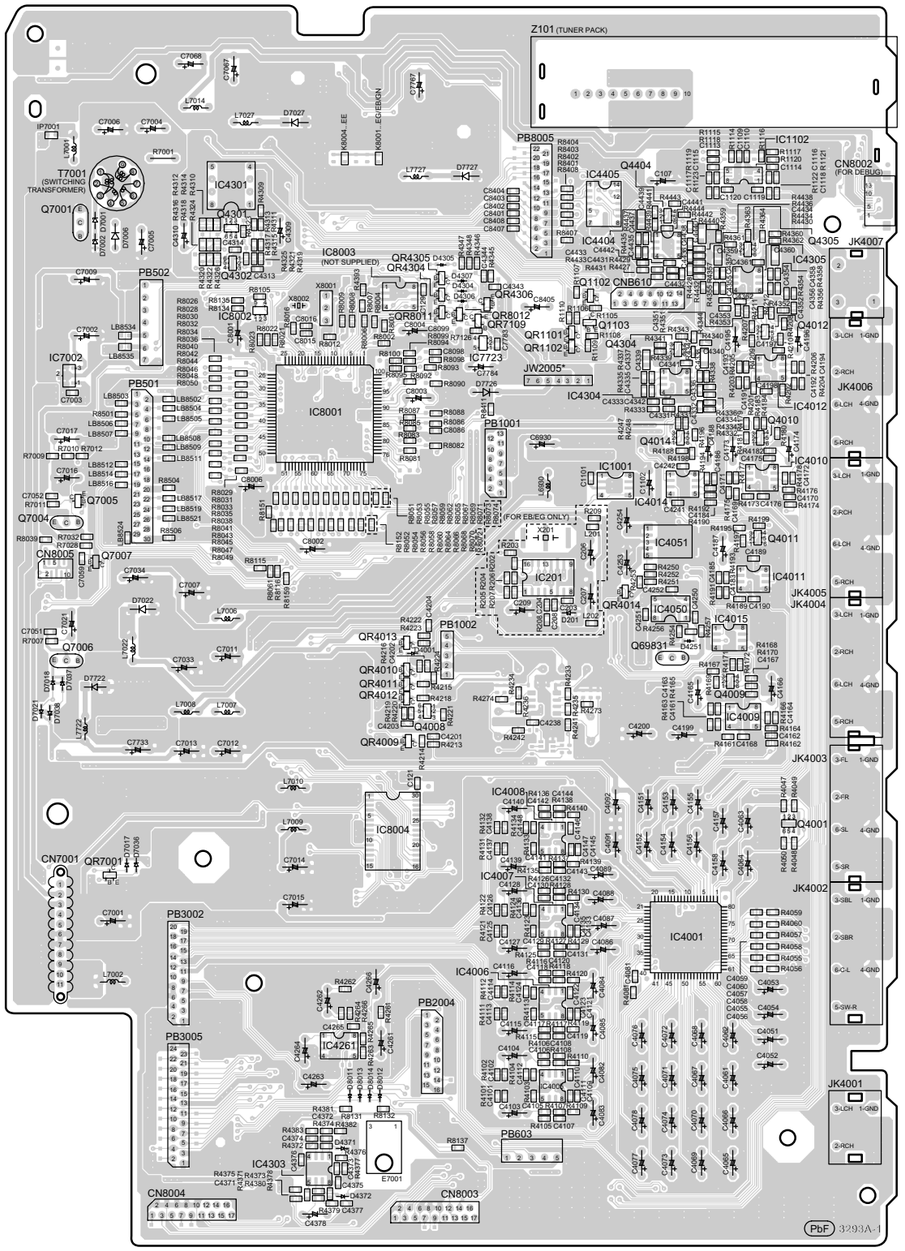

(SIDE B)

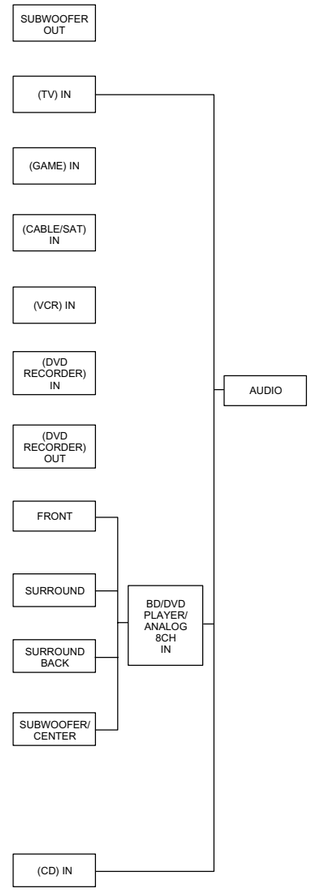


SA-BX500EB/EE/EG
MAIN P.C.B.

## 14.4. D-Port, Panel, S-Video P.C.B.

### D D-PORT P.C.B. (REP4337A-M...EB/EG) (REP4337D-M...EE)

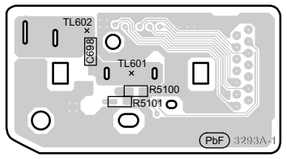


(SIDE A)

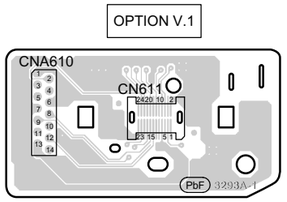


(SIDE B)

### E PANEL P.C.B. (REP4338A-S)

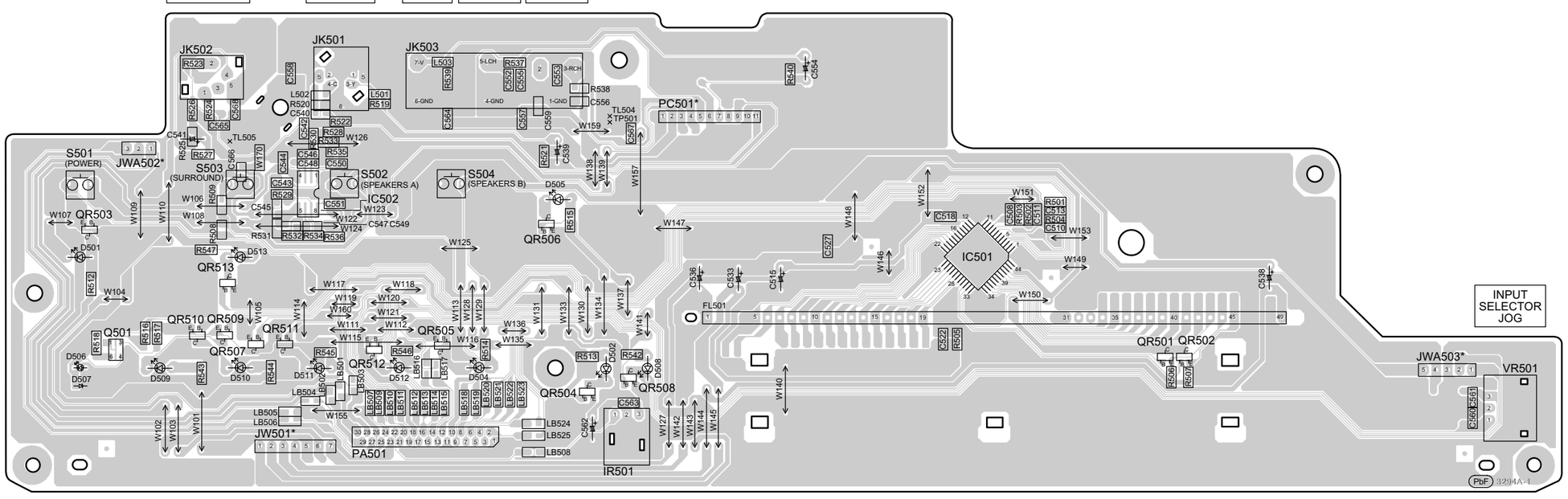


### F S-VIDEO P.C.B. (REP4338A-S)

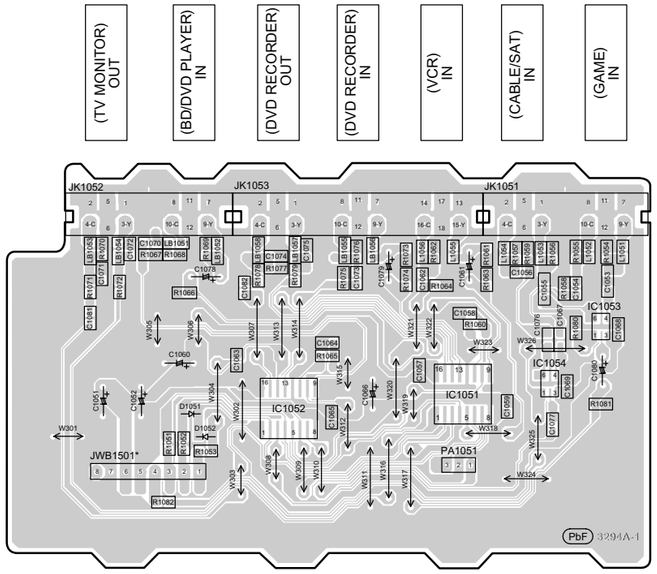


* FOR INDICATION ONLY

SA-BX500EB/EE/EG
D-PORT/PANEL/S-VIDEO P.C.B.

## 14.5. Headphone, Speaker, Digital, Video, Volume P.C.B.

### G HEADPHONE P.C.B. (REP4338A-S)

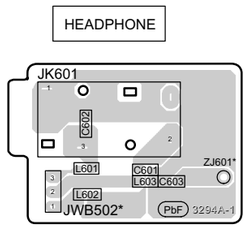


### I DIGITAL P.C.B. (REP4338A-S)

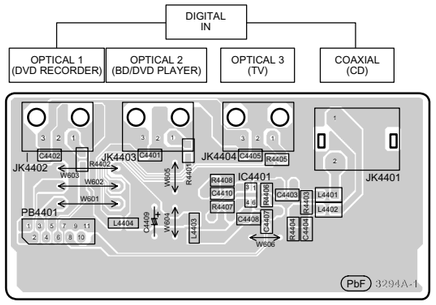


### J VIDEO P.C.B. (REP4338A-S)

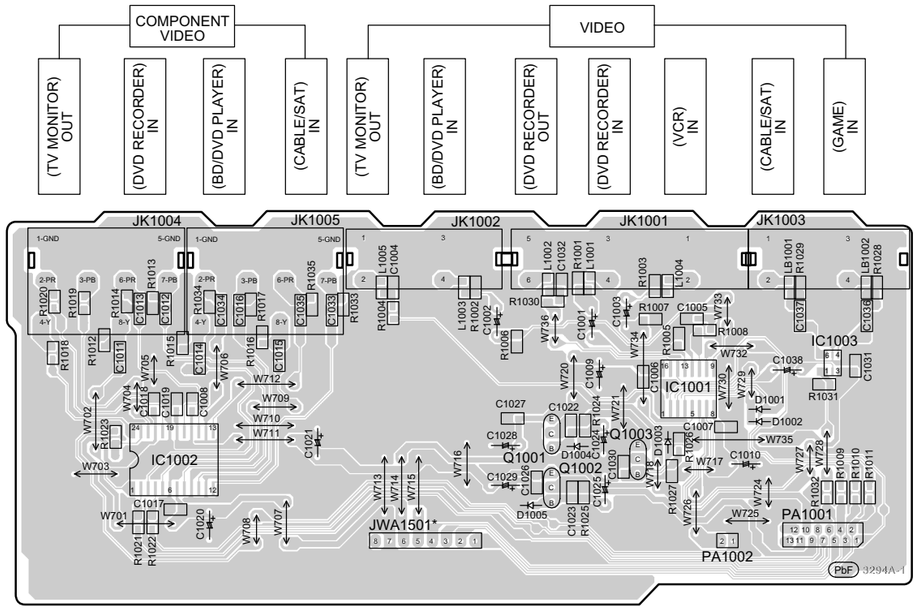


### H SPEAKER P.C.B. (REP4338A-S)

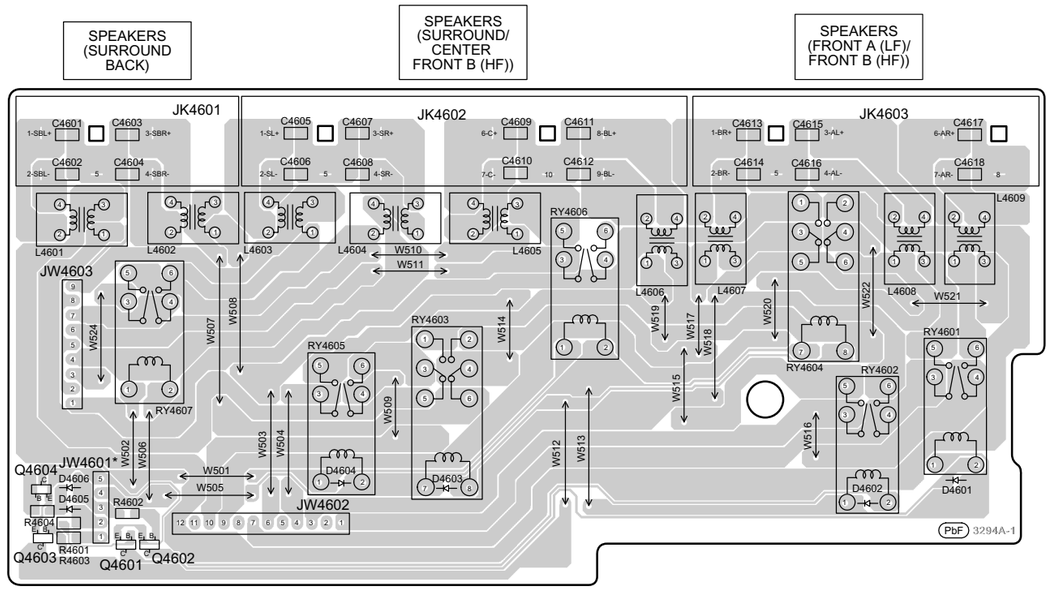


### K VOLUME P.C.B. (REP4338A-S)

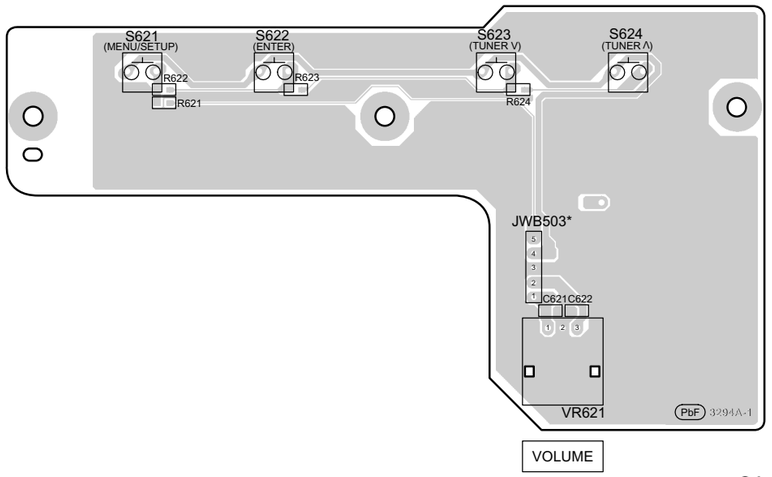


* FOR INDICATION ONLY

SA-BX500EB/EE/EG
HEADPHONE/SPEAKER/DIGITAL/VIDEO/VOLUME P.C.B.

## 14.6. Wireless, Fan, AC Inlet P.C.B.

### L WIRELESS ADAPTER P.C.B. (REP4338A-S)

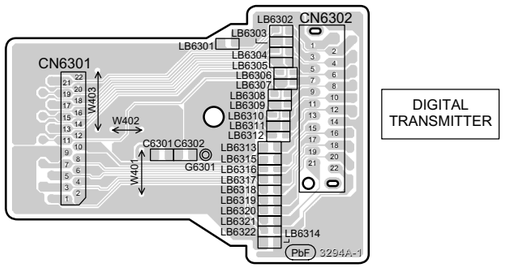


### Q AC INLET P.C.B. (REPX0622R)

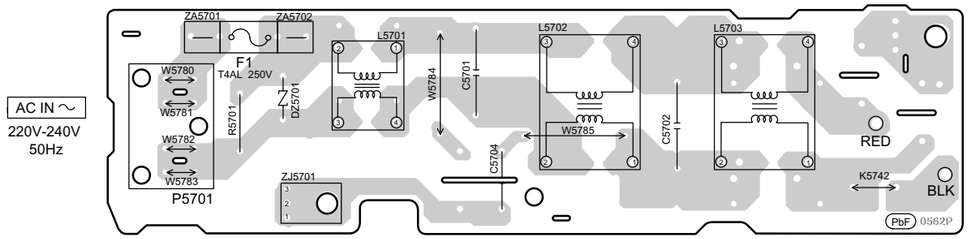


### M FAN P.C.B. (REP4338A-S)

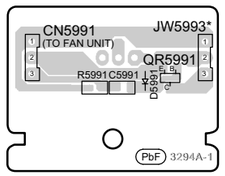


* FOR INDICATION ONLY

SA-BX500EB/EE/EG
WIRELESS ADAPTER/FAN/AC INLET P.C.B.

## 14.7. D-Amp A (4CH) P.C.B.

**N** D-AMP A (4CH) P.C.B. (REPX0621J)

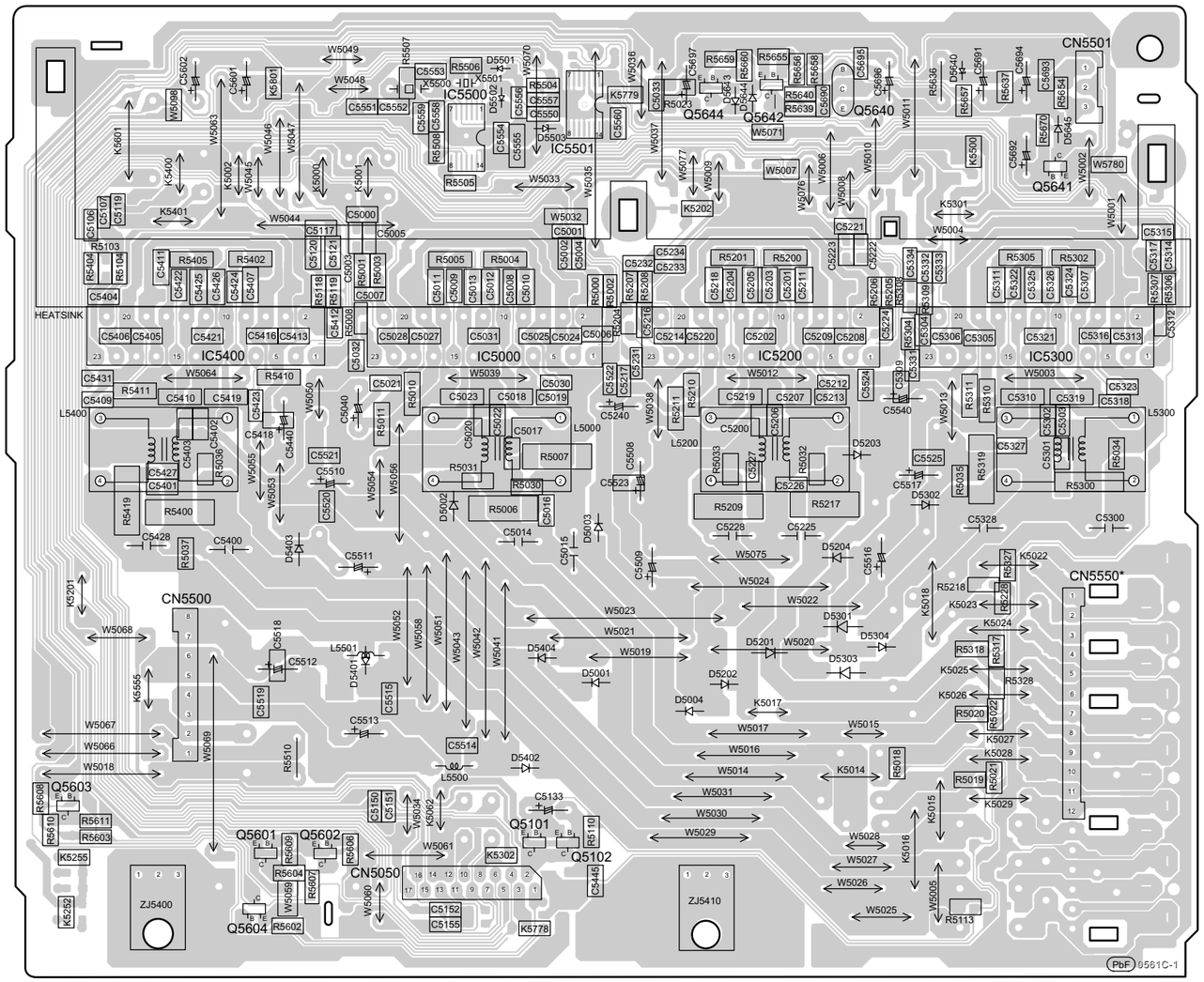


* FOR INDICATION ONLY

SA-BX500EB/EE/EG
D-AMP A (4CH) P.C.B.

## 14.8. D-Amp B (3CH) P.C.B.

### O D-AMP B (3CH) P.C.B. (REPX0621K)

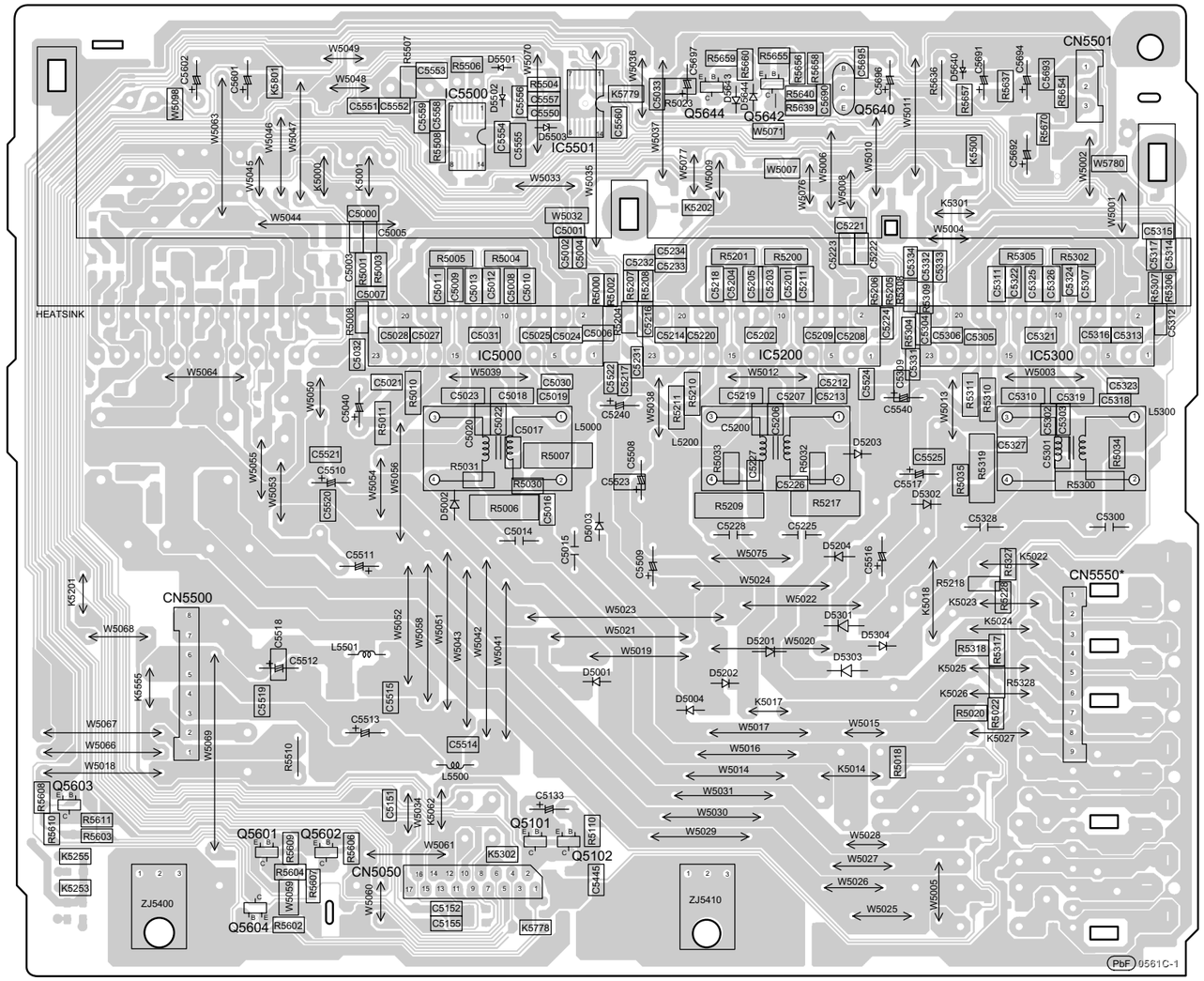


* FOR INDICATION ONLY

SA-BX500EB/EE/EG
D-AMP B (3CH) P.C.B.

## 14.9. SMPS P.C.B.

**P** SMPS P.C.B. (REPX0622R)

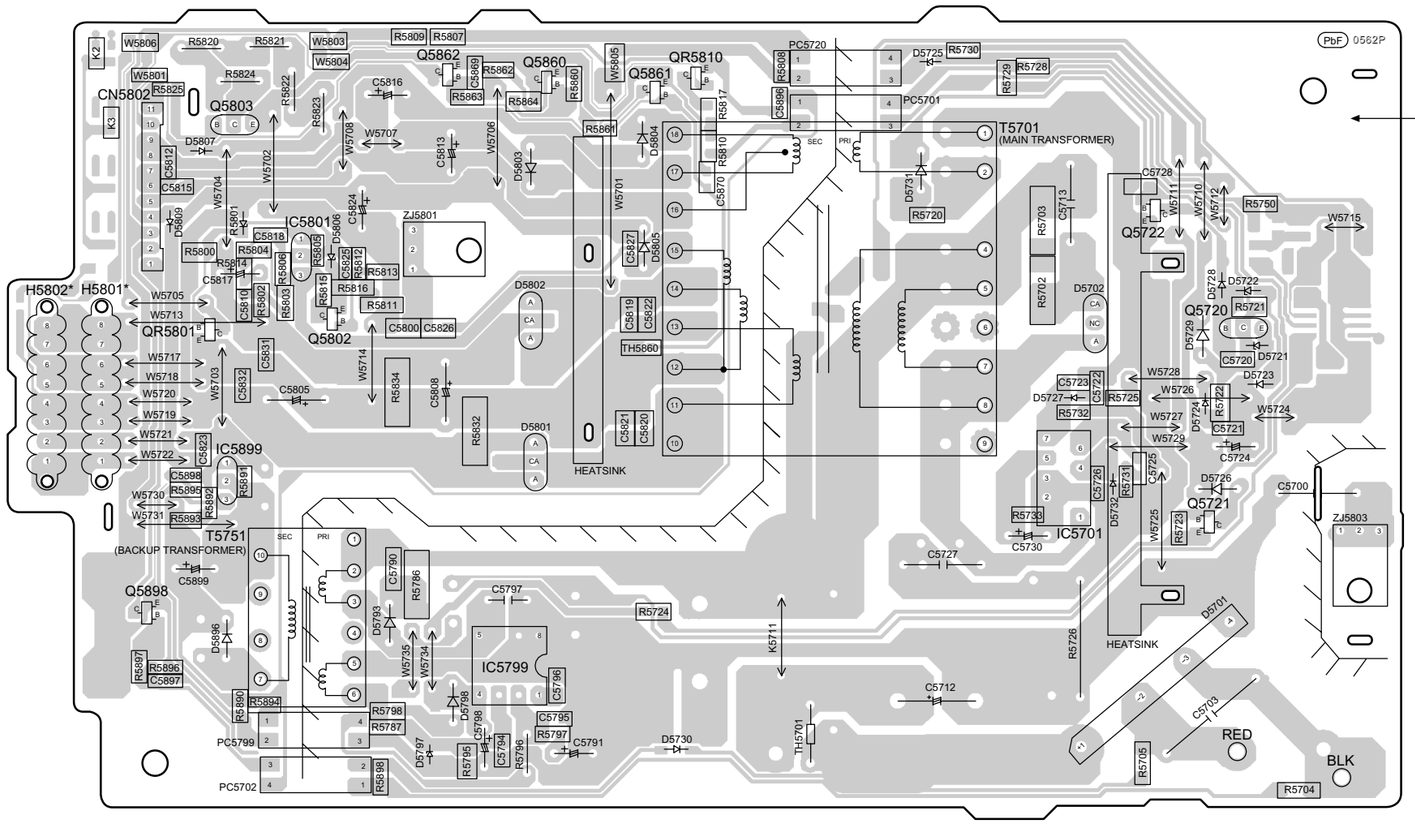


* FOR INDICATION ONLY

SA-BX500EB/EE/EG
SMPS P.C.B.

# 15 Basic Troubleshooting Guide

## 15.1. Troubleshooting Guide for F61 and/or F76

This section illustrates the checking procedures when upon detecting the error of “F61” and/or “F76” after power up of the unit. It is for purpose of troubleshooting and checking in SMPS, D-Amp & Power Supply P.C.B.

### 15.1.1. Block Diagram

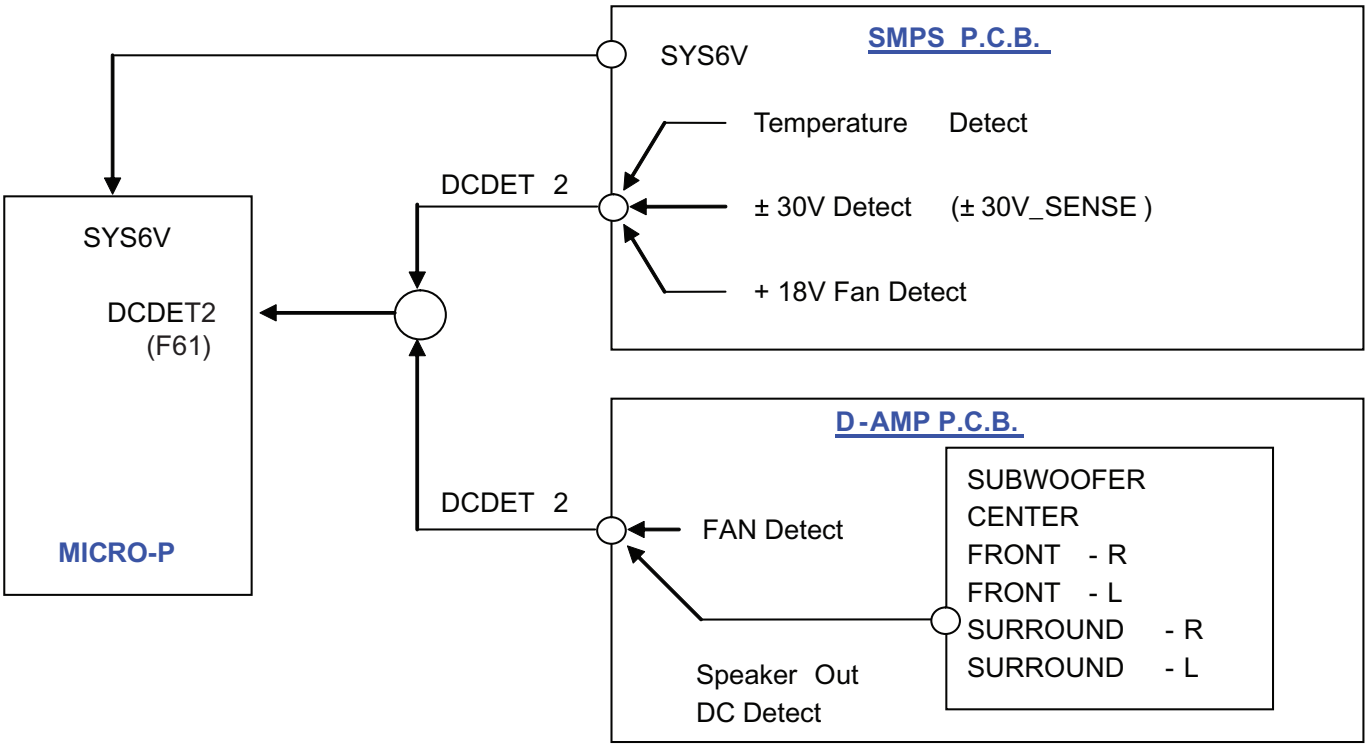

## 15.1.2. Troubleshooting Guide

| Symptom | Checking Items | Repair Items | Remarks |
|---|---|---|---|
| FL display blinking with abnormal segment when power ON the set or "F61" | Check the soldering of the SMPS P.C.B.<br>• Is there any solder crack at area (Q5860,Q5861, Q5862,TH5860, QR5801)<br>• Check all the supply line ± 30V<br>• Is there any solderability at area of feedback circuit<br>• Check feedback circuit (IC5801, Q5802, D5806, PC5720, D5725) | Touch-up the solder crack area/ Change the defective parts.<br>• Q5860,Q5861,Q5862,TH5860 (Temperature Detect)<br>• QR5801 & QR5802 (± 30V Detect)<br>• Touch-up the necessary areas<br>• IC5801, D5806, PC5720, D5725 | SMPS P.C.B.<br><br>Refer to Fig. 1 |
| First Power ON Display immediate show "F61". | Check Speaker output by using multi-meter,<br>• If there is a DC Voltage around ± 30V<br>• Check Output IC (Pin 10 & 14) which have DC Voltage at Speaker output short to ± Vdd/Vss<br>• If shorted that means D-Amp damage already. | Change the defective parts.<br><br>D-AMP IC:<br>IC5000/IC5200/IC5300/IC5400<br>P/N = C1BA00000487<br><br>For Configuration<br>Refer to Table 1 | D-AMP P.C.B.<br><br>Refer to Fig. 2 |
| Power ON for a while then only trigger "F61".<br>(Symptom always happen) | Check the fan connection & feedback loop:<br>• If the fan not proper connected, "F61" will trigger when the volume increase.<br>• If the fan is not working, check for fan circuit.<br>Check the soldering of the SMPS P.C.B.<br>• Is there any solder crack at area (Q5860,Q5861, Q5862,TH5860, QR5801)<br>• Check all the supply line ± 30V | Re-connect the Fan to CN5501<br><br>Fan circuit: Q5640, Q5641, Q5642, Q5644<br><br>Touch-up the solder crack area/ Change the defective parts.<br>• Q5860,Q5861,Q5862,TH5860 (Temperature Detect)<br>• QR5801 & QR5802 (± 30V Detect)<br>Feedback Circuit: IC5801, PC5720, D5725 | D-AMP P.C.B.<br><br>Refer to Fig. 3 |
| Power ON for a while and then trigger "F76" | Check all supply voltages as follows:<br>Step 1: Check for supply voltages from SMPS P.C.B. to Main P.C.B. at Pin 2, 5, 8, 9 of CN7001. If there are supply voltages, proceed to Step 2.<br><br>If no Voltages detectd, check wire connection and circuitry connection from SMPS P.C.B.<br>Step 2: Check if there is supply voltages for FL-Vp, FL+5V at PB502.<br>Step 3: Check if there is supply voltages of +33V (D+3R3V), +5V (WL_D5V & D+5V), +11V (SP_RELAY+11V), +75V (A+7R5V) & -7.5V (A-7R5V) | Check and change the possible defective parts.<br><br>• IP7001 (Fuse Protector) T7001, D7002, D7003, D7004, D7005, D7006<br>• IC7004 (DC-DC Converter IC) & related regulator circuit components<br>• IC7704 (DC-DC Converter IC) & related regulator circuit components | Main P.C.B.<br><br>Refer to Fig. 4 |

### 15.1.3. Part Location

#### 15.1.3.1. SMPS P.C.B.

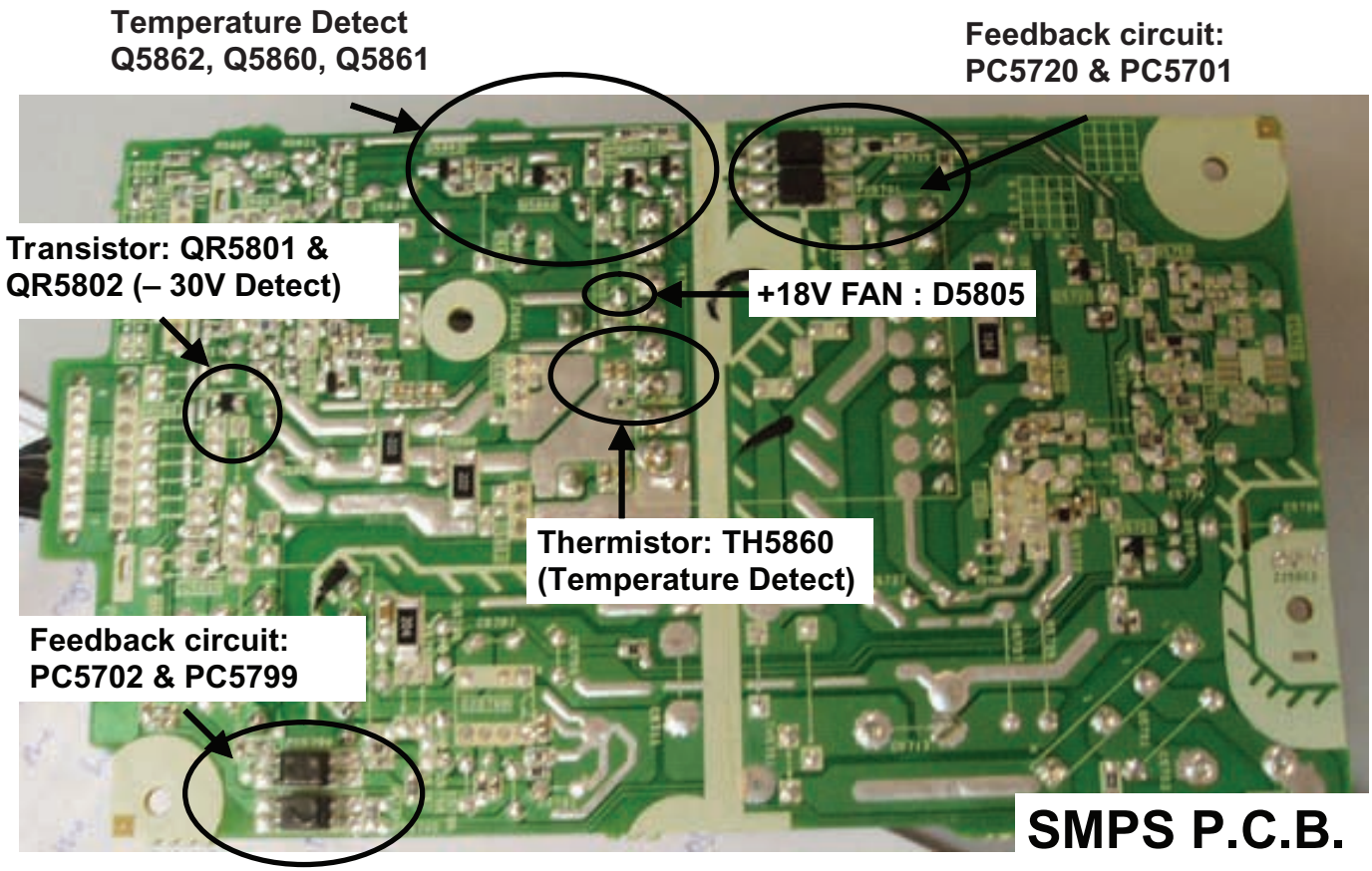


Fig. 1 SMPS P.C.B.

### 15.1.3.2. D-Amp A (4CH) P.C.B.

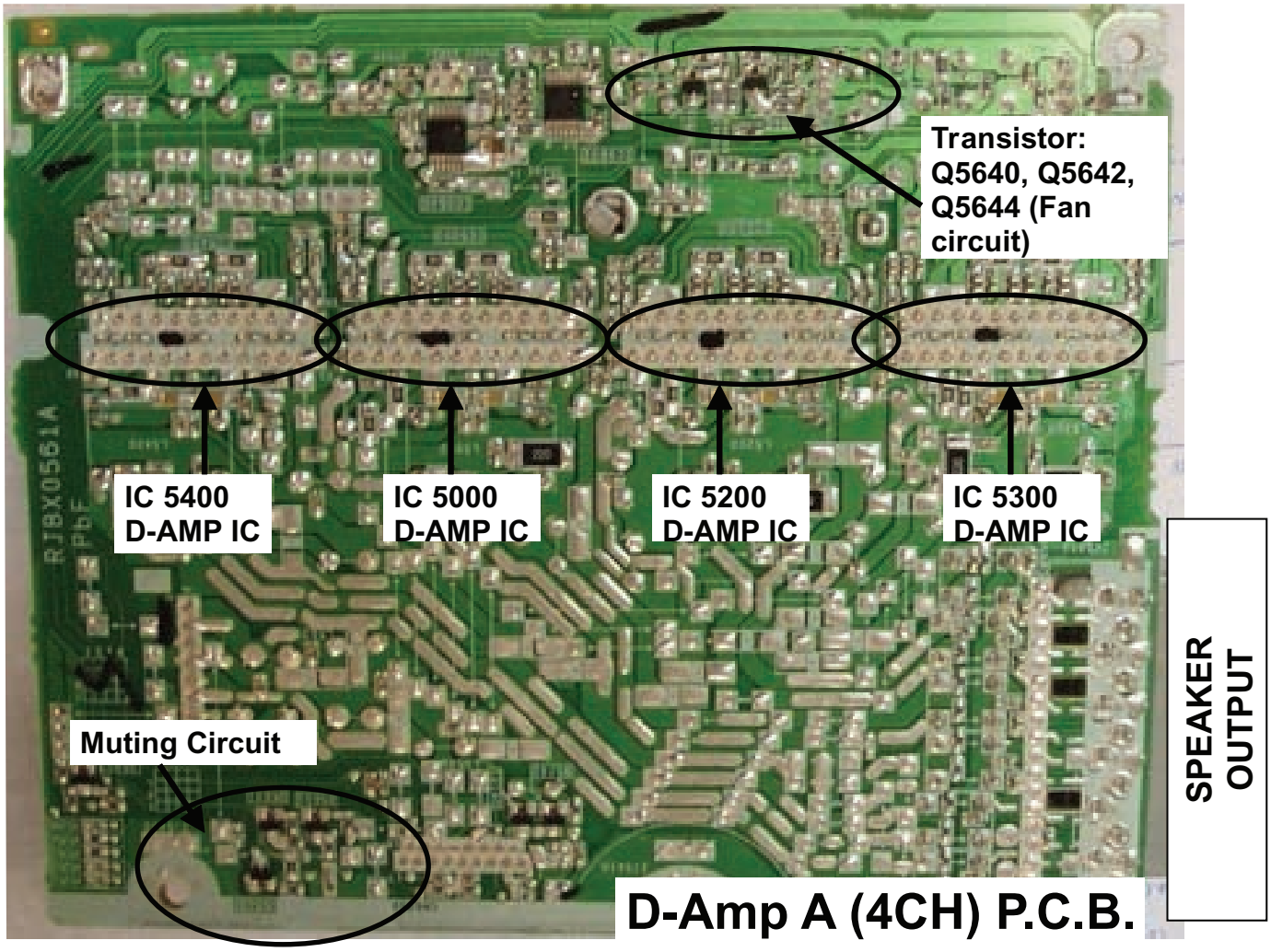


Fig. 2 D-Amp P.C.B

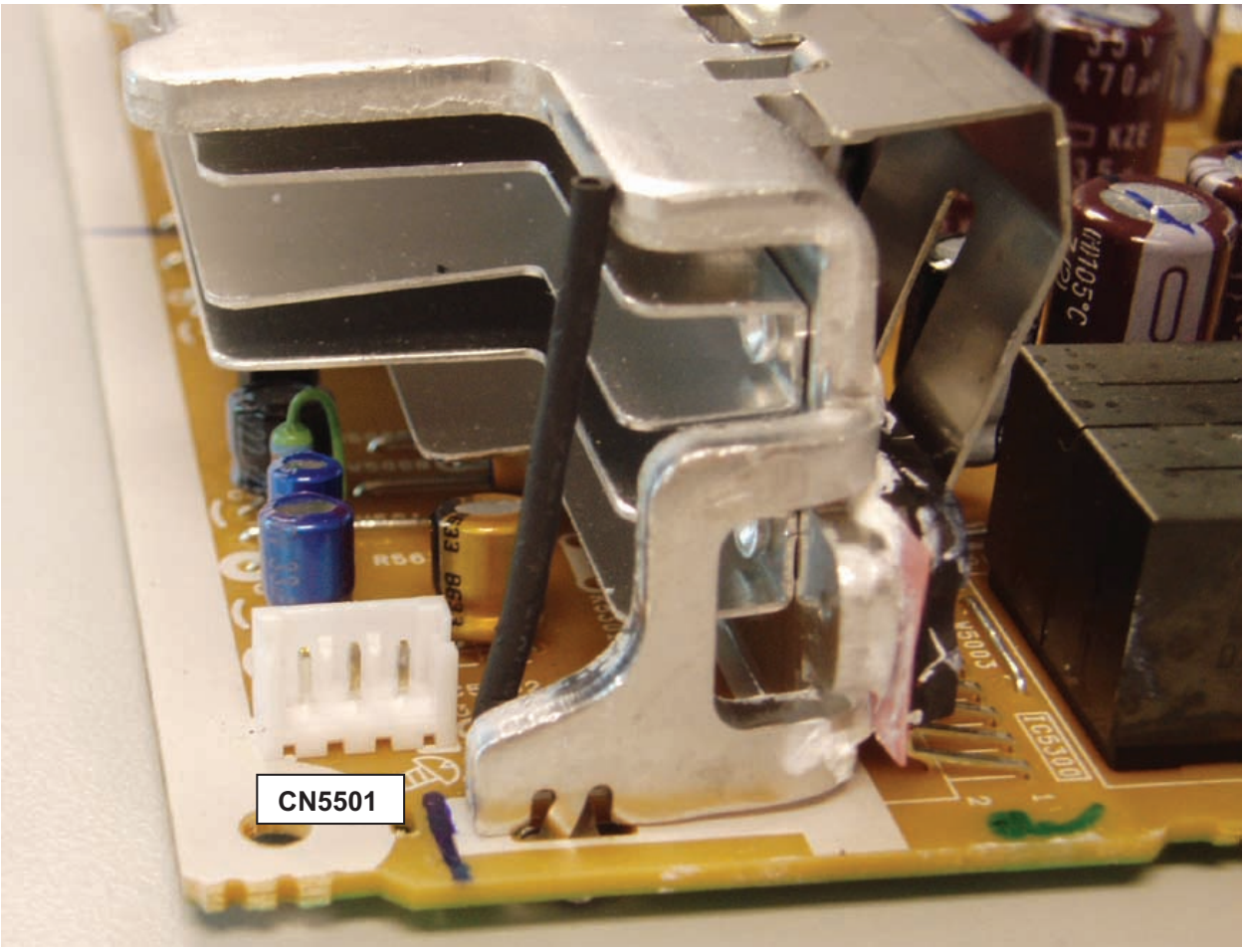


Fig. 3 Fan Connector

### 15.1.3.3. D-Amp B (3CH) P.C.B.

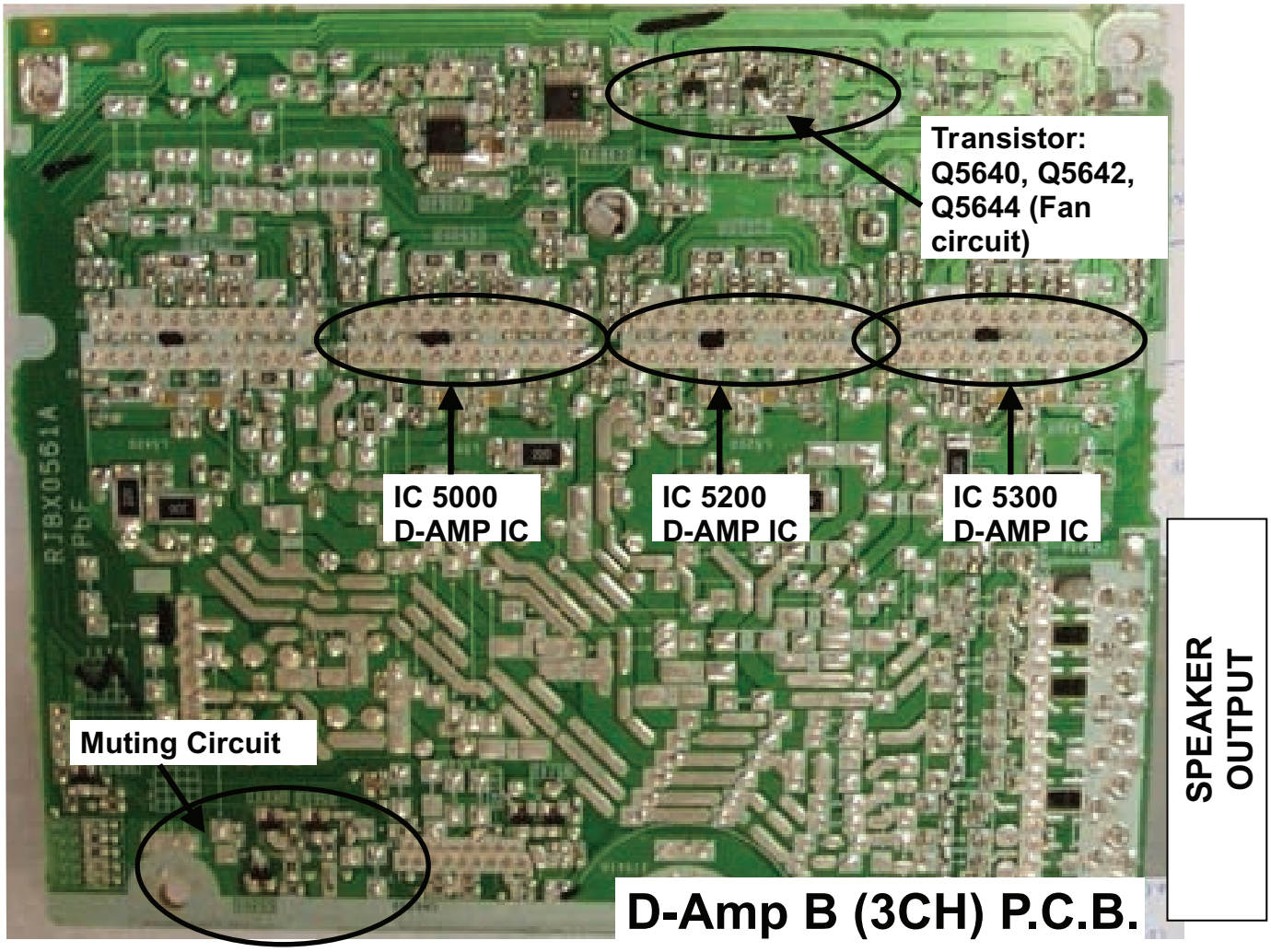

### 15.1.3.4. D-Amp IC Configuration of D-Amp A (4CH) P.C.B.

| | | BX500EE/EB/EG |
|---|---|---|
| IC5300 | Pin (10) | Sub-Woofer + |
| | Pin (14) | Sub-Woofer - |
| IC5200 | Pin (10) | Center + |
| | Pin (14) | Center - |
| IC5000 | Pin (10) | Front Right |
| | Pin (14) | Front Left |
| IC5400 | Pin (10) | Surround Right |
| | Pin (14) | Surround Left |

Table 1

### 15.1.3.5. D-Amp IC Configuration of D-Amp B (3CH) P.C.B.

| | | BX500EE/EB/EG |
|---|---|---|
| IC5300 | Pin (10) | Sub-Woofer + |
| | Pin (14) | Sub-Woofer - |
| IC5200 | Pin (10) | Center + |
| | Pin (14) | Center - |
| IC5000 | Pin (10) | Front Right |
| | Pin (14) | Front Left |

Table 2

# 16 Overall Simplified Block for BX500

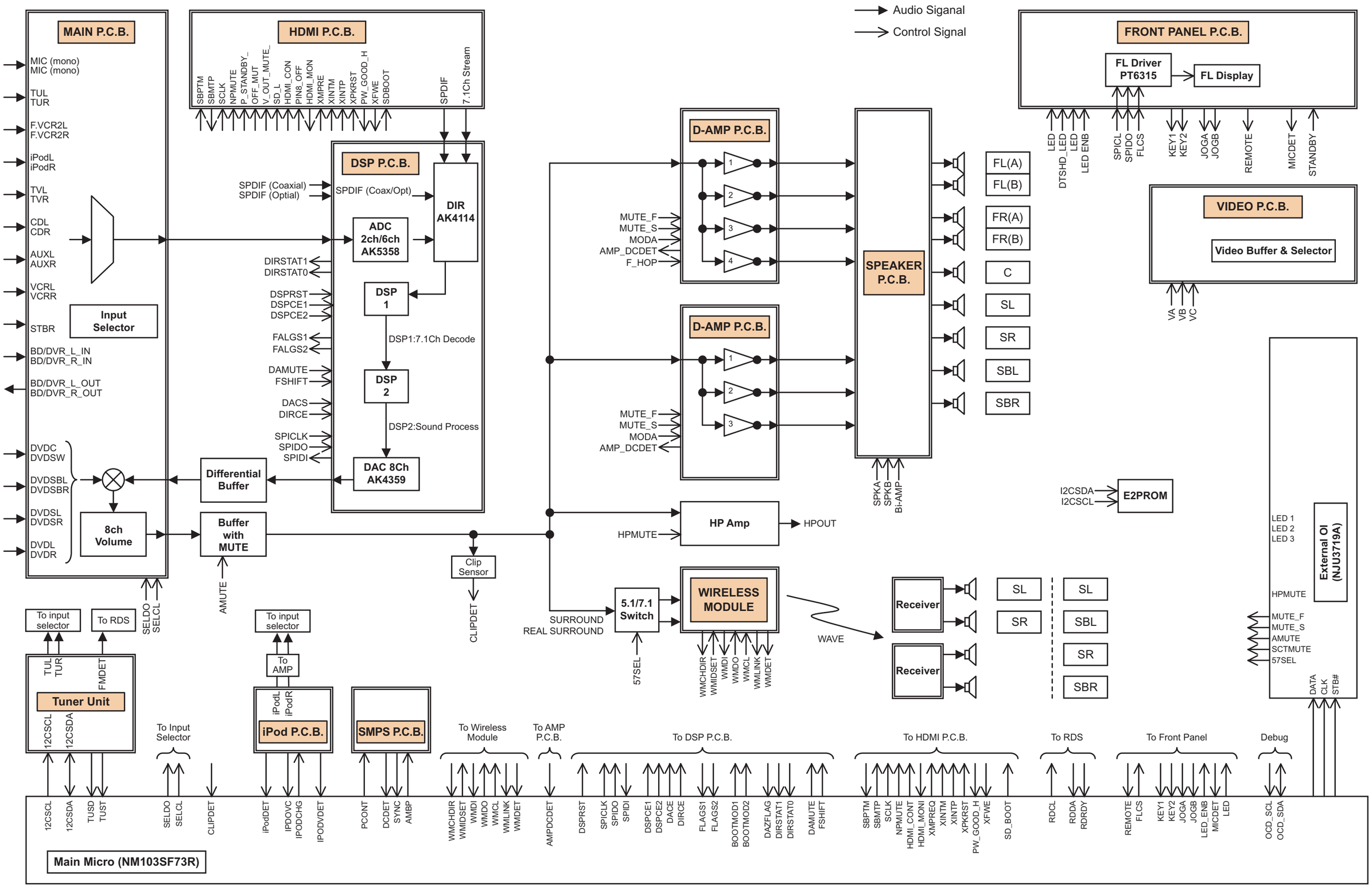

# 17 Terminal Function of IC's

## 17.1. IC8001 (RFXWBX500EBK): Micro-processor

Not available at the moment.

## 17.2. IC501 (C0HBB0000057): IC FL Driver

| Pin No. | Terminal Name | I/O | Function |
|---|---|---|---|
| 1 | LED1 | O | Led Drive Output |
| 2 | LED2 | O | Led Drive Output |
| 3 | LED3 | O | Led Drive Output |
| 4 | LED4 | O | Led Drive Output |
| 5 | OSC | I | Oscillator Input |
| 6 | DOUT | O | Data Output |
| 7 | DIN | I | Data Input |
| 8 | CLK | I | Clock Input |
| 9 | STB | I | Serial Interface Strobe |
| 10 | K1 | I | Key Data Input 1 (No Connection) |
| 11 | K2 | I | Key Data Input 2 (No Connection) |
| 12 | VSS | - | GND |
| 13 | VDD | - | Power Supply (+5V) |
| 14 | SG1 | O | Segment Output 18 |
| 15 | SG2 | O | Segment Output 17 |
| 16 | SG3 | O | Segment Output 16 |
| 17 | SG4 | O | Segment Output 15 |
| 18 | SG5 | O | Segment Output 14 |
| 19 | SG6 | O | Segment Output 13 |
| 20 | SG7 | O | Segment Output 12 |
| 21 | SG8 | O | Segment Output 11 |
| 22 | SG9 | O | Segment Output 10 |
| 23 | SG10 | O | Segment Output 9 |
| 24 | SG11 | O | Segment Output 8 |
| 25 | SG12 | O | Segment Output 7 |
| 26 | SG13 | O | Segment Output 6 |
| 27 | SG14 | O | Segment Output 5 |
| 28 | SG15 | O | Segment Output 4 |
| 29 | SG16 | O | Segment Output 3 |
| 30 | VEE | - | Voltage Supply |
| 31 | GR12 | O | Grid Segment Output 12 |
| 32 | GR11 | O | Grid Segment Output 11 |
| 33 | GR10 | O | Grid Segment Output 10 |
| 34 | GR9 | O | Grid Segment Output 9 |
| 35 | GR8 | O | Grid Segment Output 8 |
| 36 | GR7 | O | Grid Segment Output 7 |
| 37 | GR6 | O | Grid Segment Output 6 |
| 38 | GR5 | O | Grid Segment Output 5 |
| 39 | GR4 | O | Grid Segment Output 4 |
| 40 | GR3 | O | Grid Segment Output 3 |
| 41 | GR2 | O | Grid Segment Output 2 |
| 42 | GR1 | O | Grid Segment Output 1 |
| 43 | VDD | - | Voltage Supply (+5V) |
| 44 | VSS | - | GND |

# 18 Exploded Views

## 18.1. Cabinet Parts Location

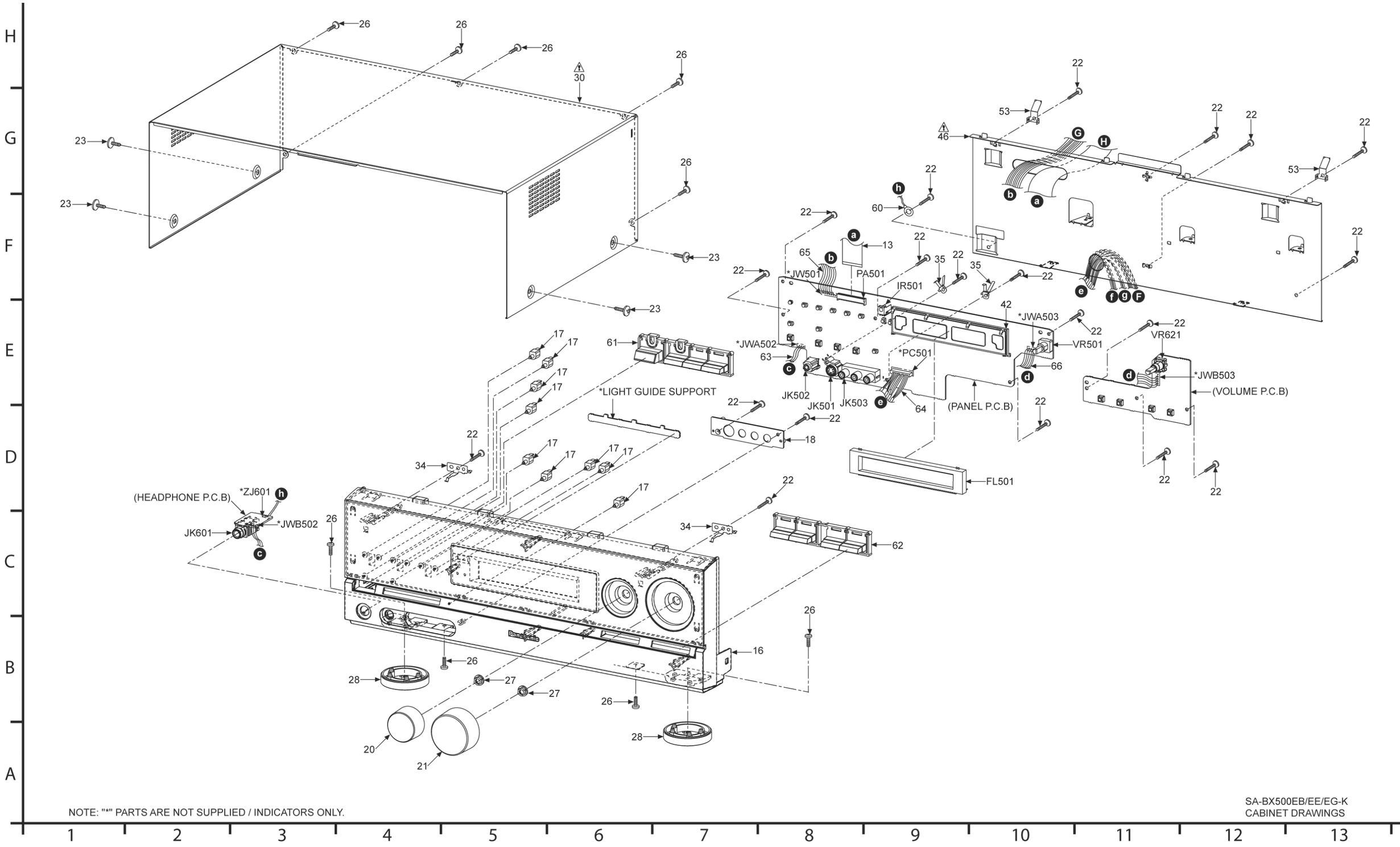

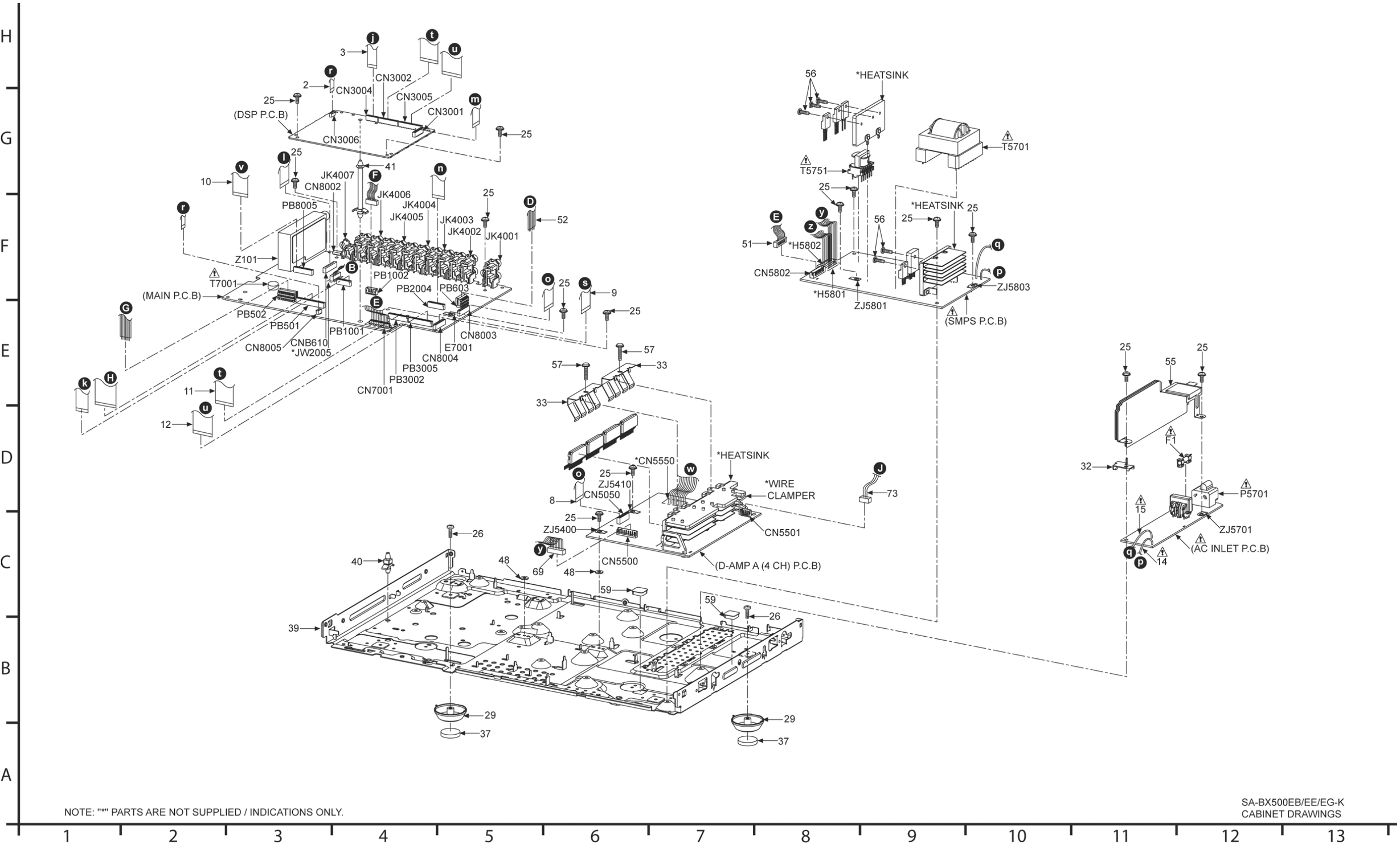


NOTE: "*" PARTS ARE NOT SUPPLIED / INDICATIONS ONLY.

SA-BX500EB/EE/EG-K
CABINET DRAWINGS

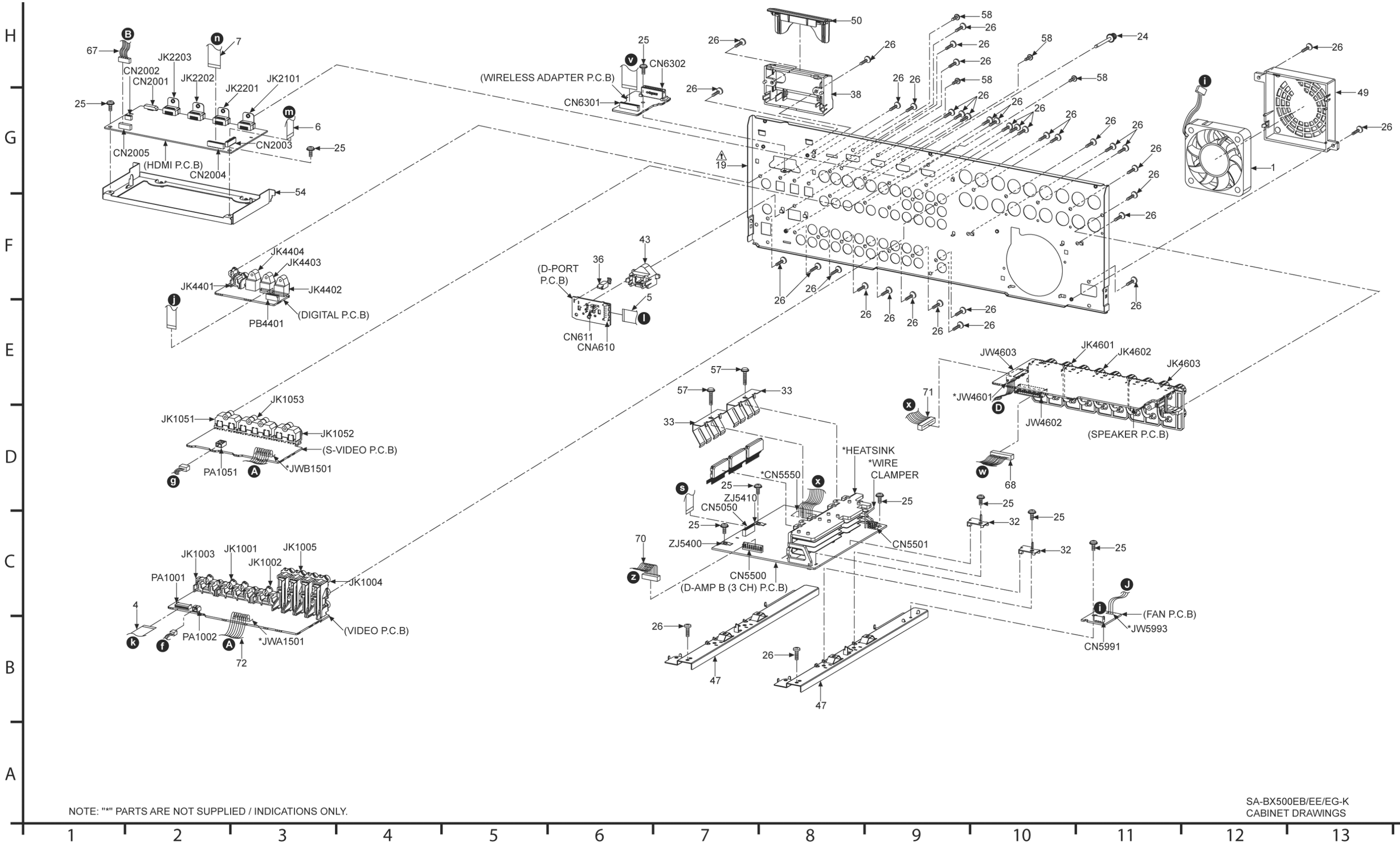


NOTE: "*" PARTS ARE NOT SUPPLIED / INDICATIONS ONLY.

SA-BX500EB/EE/EG-K
CABINET DRAWINGS

## 18.2. Packaging

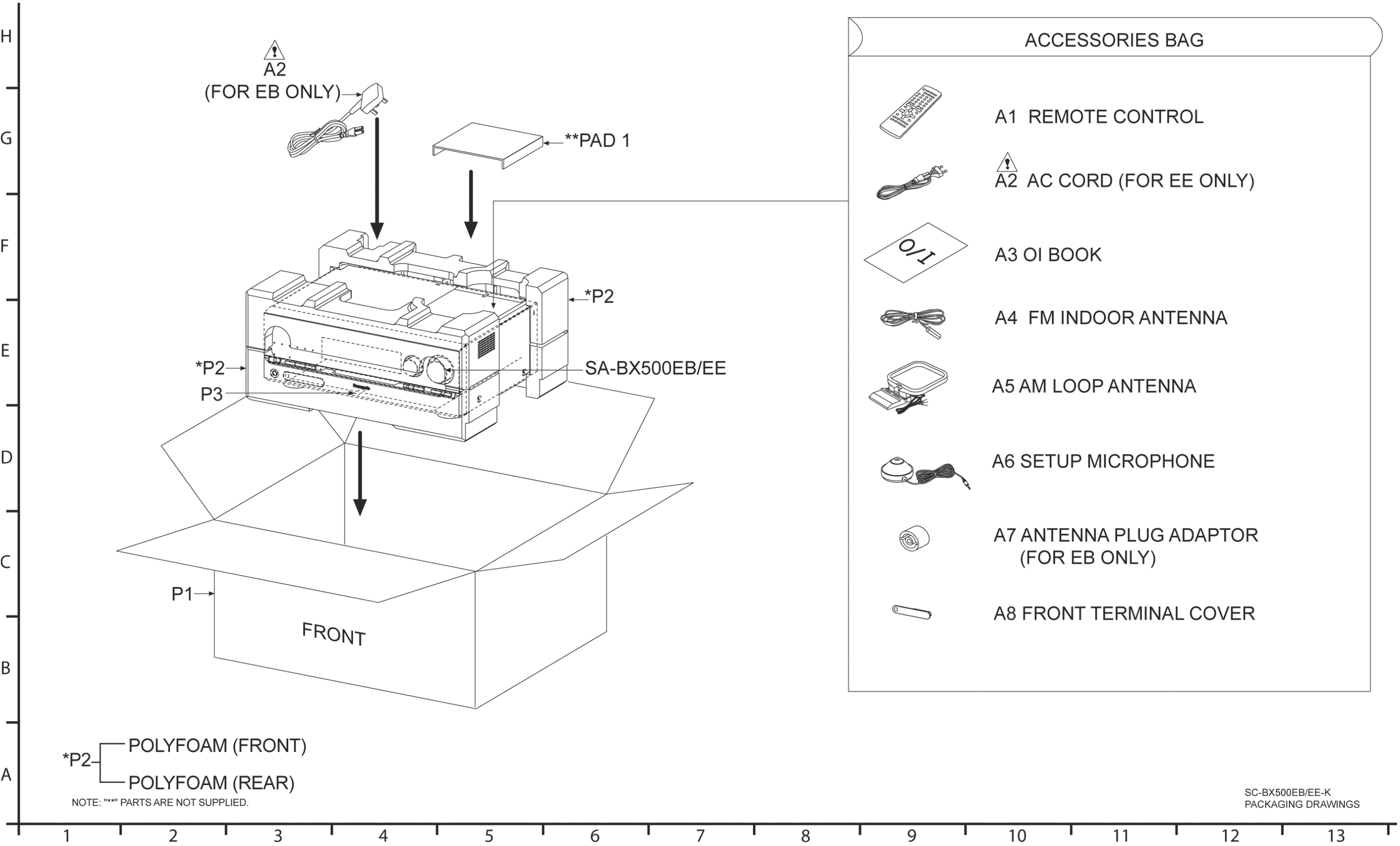

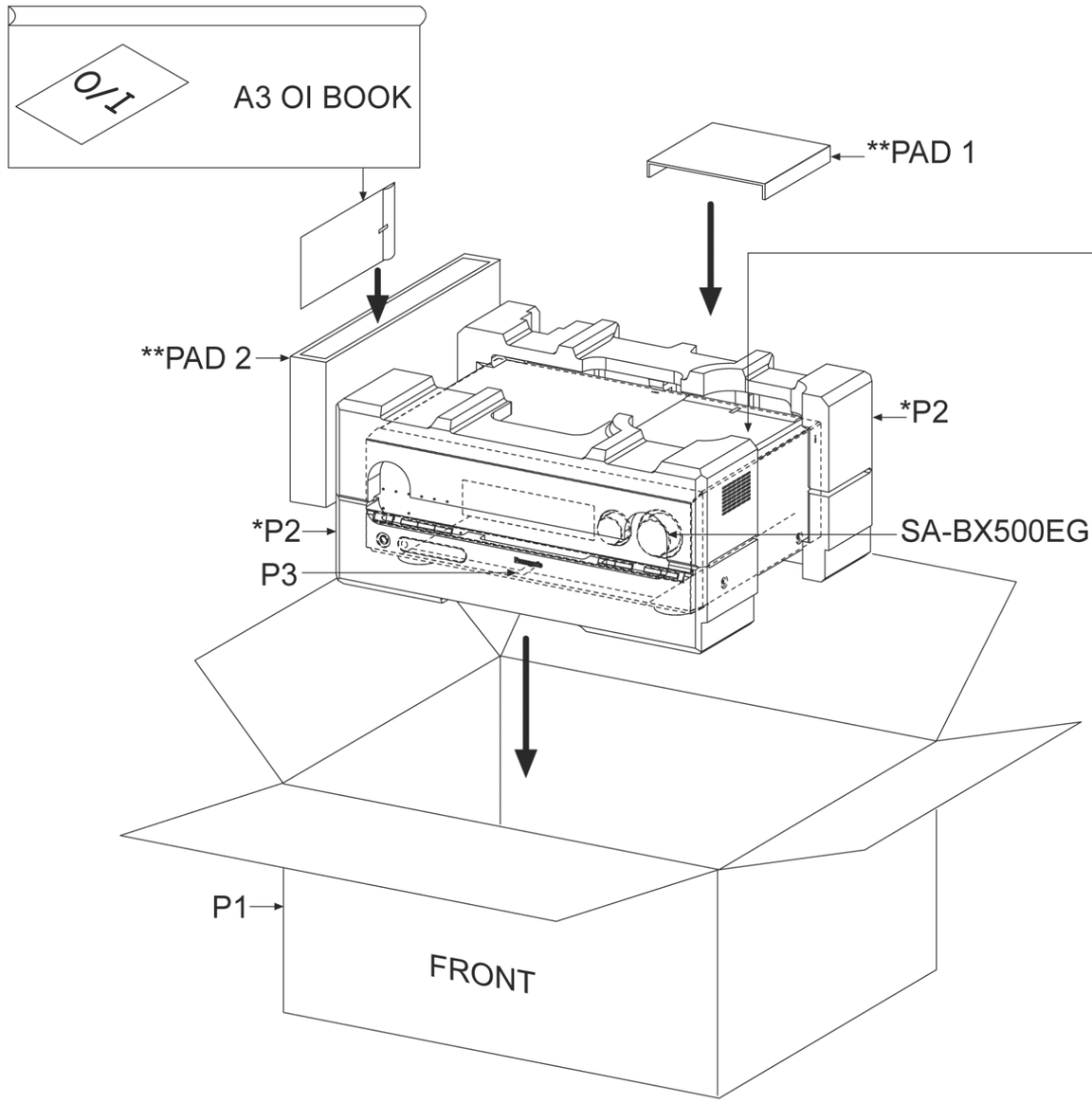


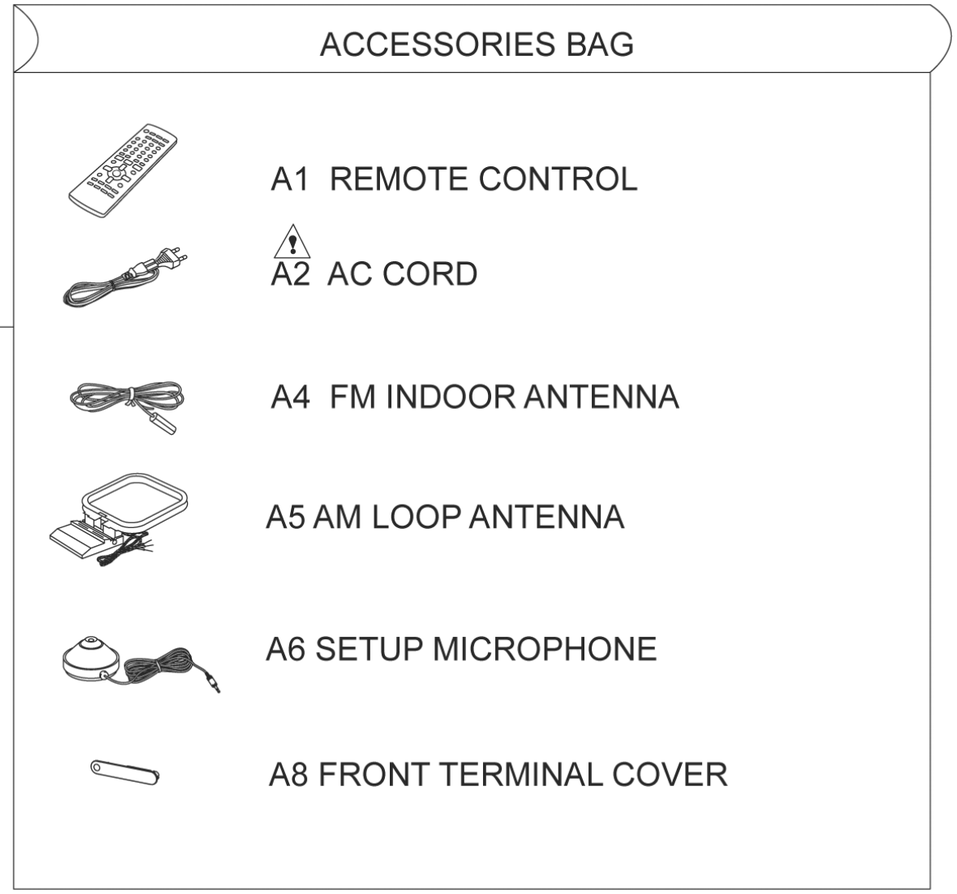


*P2 — POLYFOAM (FRONT)
*P2 — POLYFOAM (REAR)

NOTE: "**" PARTS ARE NOT SUPPLIED.

SC-BX500EG-K
PACKAGING DRAWINGS

# 19 Replacement Parts List

**Notes:**

- Important safety notice:

  Components identified by ⚠ mark have special characteristics important for safety purpose.

  Furthermore, special parts which have purposes of fire-retardant (resistors), high-quality sound (capacitors), low-noise (resistors), etc. are used.

  When replacing any of components, be sure to use only manufacturer's specified parts shown in the parts list.
- Warning: This product uses a laser diode. Refer to caution statements.
- Resistance values are in ohms, unless specified otherwise, 1K=1,000 (OHM), 1M=1,000K (OHM).
- The parenthesized indications in the Remarks columns specify the model names and areas. (Refer to the cover page)
- The marking (RTL) indicates the retention time is limited for this item. After the discontinuation of this assembly in production, it will no longer be available.
- Parts mentioned [M] are supplied from PAVCSG.
- Parts mentioned [SPG] are supplied from PAVC.
- Reference for O/I book languages are as follows:

| | | | | | | | |
|---|---|---|---|---|---|---|---|
| Ar: | Arabic | Du: | Dutch | It: | Italian | Sp: | Spanish |
| Cf: | Canadian French | En: | English | Ko: | Korean | Sw: | Swedish |
| Cz: | Czech | Fr: | French | Po: | Polish | Co: | Traditional Chinese |
| Da: | Danish | Ge: | German | Ru: | Russian | Cn | Simplified Chinese |
| Pe: | Persian | Ur: | Ukrainian | Pr: | Portuguese | | |

# 19.1. Component Parts List

| Ref. No. | Part No. | Part Name & Description | Remarks |
|---|---|---|---|
| | | | |
| | | CABINET AND CHASSIS | |
| | | | |
| 1 | L6FAYYYE0003 | FAN UNIT | [M] |
| 2 | REE1458 | 10P FFC CABLE (MN-DSP) | [M] |
| 3 | REE1459 | 11P FFC CABLE (DIG-DSP) | [M] |
| 4 | REE1460 | 13P FFC CABLE (MN-VIDEO) | [M] |
| 5 | REE1461 | 14P FFC CABLE (MN-DPORT) | [M] |
| 6 | REE1462 | 15P FFC CABLE (HDMI-DSP) | [M] |
| 7 | REE1463 | 16P FFC CABLE (MN-HDMI) | [M] |
| 8 | REE1464 | 17P FFC CABLE (DAMP A-MN) | [M] |
| 9 | REE1465 | 17P FFC CABLE (DAMP B-MN) | [M] |
| 10 | REE1466 | 22P FFC CABLE (WIRELESS-MN) | [M] |
| 11 | REE1467 | 20P FFC CABLE (MN-DSP) | [M] |
| 12 | REE1468 | 24P FFC CABLE (MN-DSP) | [M] |
| 13 | REE1469 | 30P FFC CABLE (MN-PANEL) | [M] |
| 14 | REXX0640-J | BLACK WIRE (SMPS-AC) | [M] ⚠ |
| 15 | REXX0641-J | RED WIRE (SMPS-AC) | [M] ⚠ |
| 16 | RFKGBX500EGK | FRONT PANEL ASS´Y | [M]EB/EG |
| 16 | RFKGBX500EEK | FRONT PANEL ASS´Y | [M] EE |
| 17 | RGL0537A-Q | STANDBY LIGHT GUIDE | [M] |
| 18 | RGK1738D-K | VCR ORNAMENT | [M] |
| 19 | RGR0385A-A | REAR PANEL | [M]EB/EG ⚠ |
| 19 | RGR0385A-B | REAR PANEL | [M] EE ⚠ |
| 20 | RGW0402-K | SELECTOR KNOB | [M] |
| 21 | RGWX0092-K | VOLUME KNOB | [M] |
| 22 | RHD26046-L | SCREW | [M] |
| 23 | RHD30007-K2J | SCREW | [M] |
| 24 | RHD30070 | SCREW | [M] |
| 25 | RHD30111-31 | SCREW | [M] |
| 26 | RHD30119-K | SCREW | [M] |
| 27 | RHN90001-1 | M9 NUT | [M] |
| 28 | RKA0079-H | SET LEG | [M] |
| 29 | RKA0202-K | REAR SET LEG | [M]EB/EG |
| 29 | RKA0202A-K | SET LEG | [M] EE |
| 30 | RKM0603-K | TOP CABINET | [M] ⚠ |
| 32 | RMAX0118-1 | PCB BRACKET | [M] |
| 33 | RMC0465 | TR SPRING | [M] |
| 34 | RMC0702 | AL EARTH ANGLE | [M] |
| 35 | RMC0709 | VCR EARTH ANGLE | [M] |
| 36 | RMCX0047 | GROUND SPRING | [M] |
| 37 | RMG0539-K | LEG FELT | [M] |
| 38 | RMKX0127-K1 | TRANSMITTER CHASSIS | [M] |
| 39 | RMKX0144C-3 | BOTTOM CABINET | [M] |
| 40 | RMN0906 | MAIN PCB SUPPORT | [M] |
| 41 | RMN0907 | DSP PCB SUPPORT | [M] |
| 42 | RMNV0065 | FL HOLDER | [M] |
| 43 | RMNX0231-1 | D-PORT COVER | [M] |
| 46 | RMQ1663 | FRONT SHIELD | [M] |
| 47 | RMQ1664 | SUPPORT BAR | [M] |
| 48 | RMQ1665 | WASHER | [M] |
| 49 | RMQ1671 | FAN COVER | [M] |
| 50 | RMVX0109-K1 | TRANSMITTER CHASSIS COVER | [M] |
| 51 | REX1297 | 11P WIRE (MN-SMPS;W5802) | [M] |
| 52 | RWJ1805145SQ | 5P WIRE (SPK-MN;JW4601) | [M] |
| 53 | RSC0734 | PANEL EARTH PLATE | [M] |
| 54 | RSCV0082 | HDMI SUPPORT CHASSIS | [M] |
| 55 | RXQX0076 | AC-IN SHIELD UNIT | [M] |
| 56 | XTB3+10JFJ | SCREW | [M] |
| 57 | XTW3+8TFJ | SCREW | [M] |
| 58 | XYN3+C8FJK | SCREW | [M] |
| 59 | RXQX0041 | CUSHION ASS´Y | [M] |
| 60 | REX1199 | WIRE (HP-SHIELD; ZJ601) | [M] |
| 61 | RGU2591-K | POWER BUTTON | [M] |
| 62 | RGU2592-K | MENU BUTTON | [M] |
| 63 | RWJ1803060SS | 3P WIRE (PAN-HP;JWA502) | [M] |
| 64 | REX1296 | 10P WIRE (PAN-MN/VID/S-VID;PC501) | [M] |
| 65 | RWJ1807200SQ | 7P WIRE (PAN-MN;JW501) | [M] |
| 66 | RWJ1805120SS | 5P WIRE (PAN-VOL;JWA503) | [M] |
| 67 | REX1294 | 7P WIRE (MN-HDMI;JW2005) | [M] |
| 68 | REX1298 | 12P WIRE (DAMP A-SPK;CN5550) | [M] |
| 69 | REXX0651 | 8P WIRE (SMPS-DAMP A;H5801) | [M] |
| 70 | REXX0651 | 8P WIRE (SMPS-DAMP B;H5802) | [M] |
| 71 | REX1295 | 9P WIRE (DAMP B-SPK;CN5550) | [M] |
| 72 | RWJ1808150SS | 8P WIRE (VID-SVID;JWA1501) | [M] |
| 73 | REX1335 | 3P WIRE (DAMP A-FAN;JW5993) | [M] |
| | | | |
| | | PACKING MATERIALS | |
| | | | |
| P1 | RPG8567-1 | PACKING CASE | [M] EG |
| P1 | RPG8568 | PACKING CASE | [M] EB |
| P1 | RPG8569 | PACKING CASE | [M] EE |
| P2 | RPN2064 | POLYFOAM | [M] |
| P3 | RPF0477 | MIRAMAT | [M] |
| | | | |
| | | ACCESSORIES | |
| | | | |
| A1 | N2QAKB000070 | REMOTE CONTROL | [M] |
| A1-1 | RKK-NC9GCS | R/C BATTERY COVER | [M] |
| A2 | K2CQ2CA00007 | AC CORD | [M] EG/EE ⚠ |
| A2 | K2CT3CA00004 | AC CORD | [M] EB ⚠ |
| A3 | RQT9224-B | O/I BOOK (En/Sp) | [M] |
| A3 | RQT9225-D | O/I BOOK (Ge/Fr/It) | [M] EG |
| A3 | RQT9226-E | O/I BOOK (Sp) | [M] EG |
| A3 | RQT9227-H | O/I BOOK (Du/Da/Sw) | [M] EG |
| A3 | RQT9228-J | O/I BOOK | [M] EG |
| A3 | RQT9229-R | O/I BOOK (Ru/Ur) | [M] EG |
| A3 | RQT9230-R | O/I BOOK | [M] EE |
| A4 | RSA0007-M | FM INDOOR ANTENNA | [M] |
| A5 | N1DAAAA00002 | AM LOOP ANTENNA | [M] |
| A6 | L0CBAB000128 | SETUP MICROPHONE | [M] |
| A7 | K1YZ02000013 | ANTENNA PLUG ADAPTER | [M] EB |
| A8 | RGK2137-K | FRONT TERMINAL COVER | [M] EB/EG |
| A8 | RGK2137A-K | FRONT TERMINAL COVER | [M] EE |
| | | | |
| | | PRINTED CIRCUIT BOARDS | |
| | | | |
| PCB1 | REP4337A-M | MAIN P.C.B. | [M] (RTL) EB/EG |
| PCB2 | REP4337D-M | MAIN P.C.B. | [M] (RTL) EE |
| PCB3 | REP4338A-S | PANEL P.C.B | [M] (RTL) |
| PCB4 | REP4338A-S | S-VIDEO P.C.B | [M] (RTL) |
| PCB5 | REP4337A-M | D-PORT P.C.B | [M] (RTL) EB/EG |
| PCB6 | REP4337D-M | D-PORT P.C.B | [M] (RTL) EE |
| PCB7 | REP4338A-S | HEADPHONE P.C.B. | [M] (RTL) |
| PCB8 | REP4338A-S | DIGITAL P.C.B. | [M] (RTL) |
| PCB9 | REP4338A-S | VIDEO P.C.B. | [M] (RTL) |
| PCB10 | REP4338A-S | SPEAKER P.C.B. | [M] (RTL) |
| PCB11 | REP4338A-S | VALUME P.C.B. | [M] (RTL) |
| PCB12 | REP4338A-S | WIRELESS ADAPTER P.C.B. | [M] (RTL) |
| PCB13 | REP4338A-S | FAN P.C.B. | [M] (RTL) |
| PCB14 | REP4369B | DSP P.C.B | [M] (RTL) |

| Ref. No. | Part No. | Part Name & Description | Remarks |
|---|---|---|---|
| PCB15 | REP4392A-T | HDMI P.C.B | [M] (RTL) |
| PCB16 | REPX0621J | D-AMP A (4CH) P.C.B. | [M] (RTL) |
| PCB17 | REPX0621K | D-AMP B (3CH) P.C.B. | [M] (RTL) |
| PCB18 | REPX0622R | SMPS P.C.B | [M] (RTL) ⚠ |
| PCB19 | REPX0622R | AC INLET P.C.B. | [M] (RTL) ⚠ |
| | | | |
| | | INTEGRATED CIRCUITS | |
| | | | |
| IC101 | C0DBZHG00047 | IC VOLTAGE REGULATOR | [M] |
| IC201 | C1AB00002751 | IC RDS | [M] EB/EG |
| IC501 | C0HBB0000057 | IC FL DISPLAY DRIVER | [M] |
| IC502 | C0ABBB000125 | IC MIC AMP | [M] |
| IC1001 | C1AB00001931 | IC VIDEO SWITCH | [M] |
| IC1001 | C0DBZYE00002 | IC USB HIGH SPEED SWITCH | [M] |
| IC1002 | C1AB00002029 | IC VIDEO AMP | [M] |
| IC1003 | C1AB00001486 | IC VIDEO SWITCH | [M] |
| IC1051 | C1AB00001931 | IC VIDEO SWITCH | [M] |
| IC1052 | C1AB00001931 | IC VIDEO SWITCH | [M] |
| IC1053 | C1AB00001486 | IC VIDEO SWITCH | [M] |
| IC1054 | C1AB00001340 | IC VIDEO SWITCH | [M] |
| IC1102 | C0ABBB000189 | IC OP-AMP | [M] |
| IC2001 | C0EBE0000338 | IC RESET | [M] |
| IC2002 | C2CBJH000147 | IC MICRO-PROCESSOR | [M] |
| IC2004 | C0CBCBG00013 | IC +3.3V REGULATOR | [M] |
| IC2005 | C0CBCBC00049 | IC REGULATOR | [M] |
| IC2006 | C0JBAZ001466 | IC LOGIC (BUFFER) | [M] |
| IC2101 | C1AB00002975 | IC HDMI TRANSMITTER | [M] |
| IC2102 | C0CBCAG00015 | IC +1.8V REGULATOR | [M] |
| IC2201 | C1AB00002977 | IC HDMI RECEIVER | [M] |
| IC2232 | C1AB00002989 | IC HDMI RECEIVER | [M] |
| IC2233 | C0CBCAG00015 | IC +1.8V REGULATOR | [M] |
| IC3001 | C2HBZY000027 | IC DIGITAL SIGNAL PROCESSOR | [M] |
| IC3002 | RFKWFDE001AA | IC FLASH ROM | [M] (RTL) |
| IC3003 | C3ABMG000238 | IC SDRAM | [M] |
| IC3004 | C3ABMG000238 | IC SDRAM | [M] |
| IC3101 | C2HBZY000028 | IC DIGITAL SIGNAL PROCESSOR | [M] |
| IC3102 | RFKWFDE002AA | IC FLASH ROM | [M] (RTL) |
| IC3103 | C3ABMG000238 | IC SDRAM | [M] |
| IC3104 | C3ABMG000238 | IC SDRAM | [M] |
| IC3201 | C0FBAK000026 | IC A/D CONVERTER | [M] |
| IC3401 | C0JBAB000661 | IC INVERTER | [M] |
| IC3402 | C0JBAB000661 | IC INVERTER | [M] |
| IC3403 | C0JBAR000434 | IC 2 CHANNEL MULTIPLEXER | [M] |
| IC3404 | C1BB00000692 | IC DIGITAL AUDIO TRANSCEIVER | [M] |
| IC3501 | C0FBBK000044 | IC D/A CONVERTER | [M] |
| IC3551 | C0JBAZ002811 | IC BUS BUFFER | [M] |
| IC3601 | C0DBAKG00007 | IC DC-DC CONVERTER | [M] |
| IC3602 | C0DBZYY00018 | IC D+3.3V REGULATOR | [M] |
| IC4001 | C1AB00002951 | IC 7.1 CH SOUND PROCESSOR | [M] |
| IC4005 | C0ABBB000125 | IC OP-AMP (FRONT IN) | [M] |
| IC4006 | C0ABBB000125 | IC OP-AMP (SURROUND IN) | [M] |
| IC4007 | C0ABBB000125 | IC OP-AMP (SUBWOOFER/CENTER IN) | [M] |
| IC4008 | C0ABBB000125 | IC OP-AMP (SURROUND BACK IN) | [M] |
| IC4009 | C0ABBB000125 | IC OP-AMP (FRONT OUT) | [M] |
| IC4010 | C0ABBB000125 | IC OP-AMP (SURROUND OUT) | [M] |
| IC4011 | C0ABBB000125 | IC OP-AMP (CENTER OUT) | [M] |
| IC4012 | C0ABBB000125 | IC OP-AMP (SURROUND BACK OUT) | [M] |
| IC4014 | C0ABBB000125 | IC OP-AMP (SUBWOOFER OUT/CENTER BUFFER) | [M] |
| IC4015 | C0ABBB000125 | IC OP-AMP (WIRELESS FRONT BUFFER) | [M] |
| IC4050 | C0ABBB000038 | IC OP-AMP (BUFFER) | [M] |
| IC4051 | C0DBEKG00004 | IC LOW DROP OUT REGULATOR | [M] |
| IC4261 | C0ABBB000038 | IC OP-AMP (SURROUND OUT 2CH) | [M] |
| IC4301 | C0AABB000085 | IC HEADPHONE AMP | [M] |

| Ref. No. | Part No. | Part Name & Description | Remarks |
|---|---|---|---|
| IC4303 | C0ABBB000125 | IC CLIP SENSING AMP | [M] |
| IC4304 | C0ABBB000125 | IC OP-AMP (WIRELESS SURROUND) | [M] |
| IC4305 | C0ABBB000125 | IC OP-AMP (WIRELESS SURROUND BACK) | [M] |
| IC4401 | C0JBAB000685 | IC INVERTER | [M] |
| IC4404 | C0ABBB000125 | IC OP-AMP (WIRELESS FRONT) | [M] |
| IC4405 | C0JBAS000008 | IC QUADRUPPLE ANALOG SWITCH | [M] |
| IC5000 | C1BA00000487 | IC AUDIO DIGITAL POWER AMP | [M] |
| IC5200 | C1BA00000487 | IC AUDIO DIGITAL POWER AMP | [M] |
| IC5300 | C1BA00000487 | IC AUDIO DIGITAL POWER AMP | [M] |
| IC5400 | C1BA00000487 | IC AUDIO DIGITAL POWER AMP | [M] |
| IC5500 | C0JBAB000902 | IC INVERTER GATE (CLOCK GENERATOR) | [M] |
| IC5501 | C0JBAF000716 | IC D-TYPE FLIP-FLOP | [M] |
| IC5701 | C5HACYY00003 | IC SWITCHING REGULATOR | [M] |
| IC5799 | MIP4110MSSCF | IC SWITCHING REGULATOR | [M] |
| IC5801 | C0DABFC00002 | IC SHUNT REGULATOR | [M] |
| IC5899 | C0DAEMZ00001 | IC SHUNT REGULATOR | [M] |
| IC7002 | C0CBABC00117 | IC BK+3.3V REGULATOR | [M] |
| IC7003 | C0CBABC00117 | IC D+3.3V REGULATOR | [M] |
| IC7004 | C0DBAYH00005 | IC SWITCHING REGULATOR | [M] |
| IC7022 | C0DBAYH00005 | IC SWITCHING REGULATOR | [M] |
| IC7704 | C0DBAYH00005 | IC SWITCHING REGULATOR | [M] |
| IC7722 | C0DBAYH00005 | IC SWITCHING REGULATOR | [M] |
| IC7723 | C0CBCDC00014 | IC HDMI+5V REGULATOR | [M] |
| IC8001 | RFKWBX500EBK | IC MICRO-PROCESSOR | [M] |
| IC8002 | C0EBE0000242 | IC SYSTEM RESET | [M] |
| IC8004 | C0JBAZ002843 | IC 24BIT SERIAL PARALLELL CONVERTER | [M] |
| | | | |
| | | TRANSISTORS | |
| | | | |
| Q501 | B1GFGCAA0001 | TRANSISTOR | [M] |
| Q1001 | 2SD0592AWA | TRANSISTOR | [M] |
| Q1002 | 2SB0621AHA | TRANSISTOR | [M] |
| Q1003 | 2SC3311ARA | TRANSISTOR | [M] |
| Q1102 | B1ADCF000001 | TRANSISTOR | [M] |
| Q1103 | B1ADCF000001 | TRANSISTOR | [M] |
| Q2101 | B1ABCF000079 | TRANSISTOR | [M] |
| Q2102 | B1ABCF000079 | TRANSISTOR | [M] |
| Q2103 | B1ABCF000079 | TRANSISTOR | [M] |
| Q2104 | B1ABCF000079 | TRANSISTOR | [M] |
| Q2105 | B1ABCF000079 | TRANSISTOR | [M] |
| Q2231 | B1HBCFA00003 | TRANSISTOR | [M] |
| Q2232 | B1CFGD000002 | TRANSISTOR | [M] |
| Q2233 | B1HBCFA00003 | TRANSISTOR | [M] |
| Q2234 | B1CFGD000002 | TRANSISTOR | [M] |
| Q2235 | B1CFGD000002 | TRANSISTOR | [M] |
| Q2236 | B1CFGD000002 | TRANSISTOR | [M] |
| Q3601 | B1DHDD000029 | TRANSISTOR | [M] |
| Q4001 | B1GFGCAA0001 | TRANSISTOR | [M] |
| Q4008 | B1GFGCAA0001 | TRANSISTOR | [M] |
| Q4009 | B1GFGCAA0001 | TRANSISTOR | [M] |
| Q4010 | B1GFGCAA0001 | TRANSISTOR | [M] |
| Q4011 | B1GFGCAA0001 | TRANSISTOR | [M] |
| Q4012 | B1GFGCAA0001 | TRANSISTOR | [M] |
| Q4014 | B1GFGCAA0001 | TRANSISTOR | [M] |
| Q4301 | B1GFGCAA0001 | TRANSISTOR | [M] |
| Q4302 | B1GFGCAA0001 | TRANSISTOR | [M] |
| Q4304 | B1GFGCAA0001 | TRANSISTOR | [M] |
| Q4305 | B1GFGCAA0001 | TRANSISTOR | [M] |
| Q4404 | B1GFGCAA0001 | TRANSISTOR | [M] |
| Q4601 | B1ABGC000001 | TRANSISTOR | [M] |
| Q4602 | B1ABGC000001 | TRANSISTOR | [M] |
| Q4603 | B1ABGC000001 | TRANSISTOR | [M] |
| Q4604 | B1ABGC000001 | TRANSISTOR | [M] |
| Q5101 | B1ABCF000176 | TRANSISTOR | [M] |
| Q5102 | B1ABCF000176 | TRANSISTOR | [M] |
| Q5601 | B1ABCF000176 | TRANSISTOR | [M] |
| Q5602 | B1ABCF000176 | TRANSISTOR | [M] |
| Q5603 | B1ADCE000012 | TRANSISTOR | [M] |
| Q5604 | B1ABCF000176 | TRANSISTOR | [M] |
| Q5640 | B1BACD000018 | TRANSISTOR | [M] |
| Q5641 | 2SC584500L | TRANSISTOR | [M] |

| Ref. No. | Part No. | Part Name & Description | Remarks |
|---|---|---|---|
| Q5642 | 2SC584500L | TRANSISTOR | [M] |
| Q5644 | 2SC584500L | TRANSISTOR | [M] |
| Q5720 | 2SC3940ARA | TRANSISTOR | [M] |
| Q5721 | 2SA207700L | TRANSISTOR | [M] |
| Q5722 | B1ABCF000176 | TRANSISTOR | [M] |
| Q5802 | B1ABCF000176 | TRANSISTOR | [M] |
| Q5803 | 2SC3940ARA | TRANSISTOR | [M] |
| Q5860 | 2SA207700L | TRANSISTOR | [M] |
| Q5861 | B1ABCF000176 | TRANSISTOR | [M] |
| Q5862 | B1ABCF000176 | TRANSISTOR | [M] |
| Q5898 | B1ABCF000176 | TRANSISTOR | [M] |
| Q7001 | B1BABK000001 | TRANSISTOR | [M] |
| Q7004 | 2SB0621AHA | TRANSISTOR | [M] |
| Q7005 | B1ADCF000001 | TRANSISTOR | [M] |
| Q7006 | 2SC3940ARA | TRANSISTOR | [M] |
| Q7007 | B1ABCF000011 | TRANSISTOR | [M] |
| Q69831 | 2SB0621AHA | TRANSISTOR | [M] |
| QR501 | UNR521M00L | TRANSISTOR | [M] |
| QR502 | UNR521M00L | TRANSISTOR | [M] |
| QR503 | B1GBCFJN0004 | TRANSISTOR | [M] |
| QR504 | B1GBCFJN0004 | TRANSISTOR | [M] |
| QR505 | B1GBCFJN0004 | TRANSISTOR | [M] |
| QR506 | B1GBCFJN0004 | TRANSISTOR | [M] |
| QR507 | B1GBCFJN0004 | TRANSISTOR | [M] |
| QR508 | B1GBCFJN0004 | TRANSISTOR | [M] |
| QR509 | B1GBCFJN0004 | TRANSISTOR | [M] |
| QR510 | B1GBCFJN0004 | TRANSISTOR | [M] |
| QR511 | B1GBCFJN0004 | TRANSISTOR | [M] |
| QR512 | B1GBCFJN0004 | TRANSISTOR | [M] |
| QR513 | B1GBCFJN0004 | TRANSISTOR | [M] |
| QR1101 | B1GBCFJJ0007 | TRANSISTOR | [M] |
| QR1102 | B1GBCFJJ0007 | TRANSISTOR | [M] |
| QR2001 | B1GBCFJJ0007 | TRANSISTOR | [M] |
| QR2002 | B1GBCFJJ0007 | TRANSISTOR | [M] |
| QR2231 | B1GBCFJJ0007 | TRANSISTOR | [M] |
| QR2232 | B1GBCFJJ0007 | TRANSISTOR | [M] |
| QR3401 | B1GDCFJN0001 | TRANSISTOR | [M] |
| QR3601 | B1GBCFJJ0001 | TRANSISTOR | [M] |
| QR4009 | B1GDCFJJ0008 | TRANSISTOR | [M] |
| QR4010 | B1GDCFJJ0008 | TRANSISTOR | [M] |
| QR4011 | B1GDCFJJ0008 | TRANSISTOR | [M] |
| QR4012 | B1GDCFJJ0008 | TRANSISTOR | [M] |
| QR4013 | B1GDCFJJ0008 | TRANSISTOR | [M] |
| QR4014 | B1GBCFJJ0007 | TRANSISTOR | [M] |
| QR4304 | B1GDCFJJ0008 | TRANSISTOR | [M] |
| QR4305 | B1GDCFJJ0008 | TRANSISTOR | [M] |
| QR4306 | B1GBCFJJ0007 | TRANSISTOR | [M] |
| QR4401 | B1GBCFNN0009 | TRANSISTOR | [M] |
| QR4402 | B1GDCFNN0007 | TRANSISTOR | [M] |
| QR4403 | B1GBCFNN0009 | TRANSISTOR | [M] |
| QR5801 | UNR221400L | TRANSISTOR | [M] |
| QR5810 | B1GBCFLL0037 | TRANSISTOR | [M] |
| QR5991 | B1GBCFJN0004 | TRANSISTOR | [M] |
| QR7001 | B1GBCFGG0011 | TRANSISTOR | [M] |
| QR7105 | B1GBCFNN0009 | TRANSISTOR | [M] |
| QR7106 | B1GBCFNN0009 | TRANSISTOR | [M] |
| QR7109 | B1GBCFNN0009 | TRANSISTOR | [M] |
| QR8011 | B1GDCFGG0005 | TRANSISTOR | [M] |
| QR8012 | B1GDCFGG0005 | TRANSISTOR | [M] |
| QR8017 | B1GBCFJJ0007 | TRANSISTOR | [M] |
| | | | |
| | | DIODES | |
| | | | |
| D103 | B0ACCK000005 | DIODE | [M] |
| D201 | MAZ803300L | DIODE | [M] EB/EG |
| D501 | B3AAA0000489 | DIODE | [M] |
| D502 | B3ABA0000187 | DIODE | [M] |
| D504 | B3AAA0000487 | DIODE | [M] |
| D505 | B3AAA0000487 | DIODE | [M] |
| D506 | B3AEA0000058 | DIODE | [M] |
| D507 | B0BC8R100004 | DIODE | [M] |
| D508 | B3ABA0000187 | DIODE | [M] |

| Ref. No. | Part No. | Part Name & Description | Remarks |
|---|---|---|---|
| D509 | B3ADA0000087 | DIODE | [M] |
| D510 | B3ADA0000087 | DIODE | [M] |
| D511 | B3ADA0000087 | DIODE | [M] |
| D512 | B3ADA0000087 | DIODE | [M] |
| D513 | B3ABA0000187 | DIODE | [M] |
| D1001 | MA2J11100L | DIODE | [M] |
| D1002 | MA2J11100L | DIODE | [M] |
| D1003 | MA2J11100L | DIODE | [M] |
| D1004 | MAZ80560ML | DIODE | [M] |
| D1005 | MAZ80560ML | DIODE | [M] |
| D1051 | MA2J11100L | DIODE | [M] |
| D1052 | MA2J11100L | DIODE | [M] |
| D2001 | MA2J72800L | DIODE | [M] |
| D2002 | MA2J72800L | DIODE | [M] |
| D2003 | B0ACCK000005 | DIODE | [M] |
| D2004 | B0ACCK000005 | DIODE | [M] |
| D2005 | B0ACCK000005 | DIODE | [M] |
| D2006 | B0ACCK000005 | DIODE | [M] |
| D2101 | MA2J72800L | DIODE | [M] |
| D2201 | B0ACCK000005 | DIODE | [M] |
| D2202 | B0ACCK000005 | DIODE | [M] |
| D3501 | MA2J11100L | DIODE | [M] |
| D3506 | MA2J11100L | DIODE | [M] |
| D3601 | B0JCPD000021 | DIODE | [M] |
| D3602 | B0ECKM000016 | DIODE | [M] |
| D3603 | MAZ802400L | DIODE | [M] |
| D3604 | MAZ80510ML | DIODE | [M] |
| D4001 | B0ACCK000005 | DIODE | [M] |
| D4251 | B0ACCK000005 | DIODE | [M] |
| D4304 | B0ACCK000005 | DIODE | [M] |
| D4305 | B0ACCK000005 | DIODE | [M] |
| D4306 | B0ACCK000005 | DIODE | [M] |
| D4307 | B0ACCK000005 | DIODE | [M] |
| D4371 | B0ACCK000005 | DIODE | [M] |
| D4372 | B0ACCK000005 | DIODE | [M] |
| D4601 | B0ACCK000005 | DIODE | [M] |
| D4602 | B0ACCK000005 | DIODE | [M] |
| D4603 | B0ACCK000005 | DIODE | [M] |
| D4604 | B0ACCK000005 | DIODE | [M] |
| D4605 | B0ACCK000005 | DIODE | [M] |
| D4606 | B0ACCK000005 | DIODE | [M] |
| D5001 | B0HCMM000019 | DIODE | [M] |
| D5002 | B0HCMM000019 | DIODE | [M] |
| D5003 | B0HCMM000019 | DIODE | [M] |
| D5004 | B0HCMM000019 | DIODE | [M] |
| D5201 | B0HCMM000019 | DIODE | [M] |
| D5202 | B0HCMM000019 | DIODE | [M] |
| D5203 | B0HCMM000019 | DIODE | [M] |
| D5204 | B0HCMM000019 | DIODE | [M] |
| D5301 | B0HCMM000019 | DIODE | [M] |
| D5302 | B0HCMM000019 | DIODE | [M] |
| D5303 | B0HCMM000019 | DIODE | [M] |
| D5304 | B0HCMM000019 | DIODE | [M] |
| D5401 | B0HCMM000019 | DIODE | [M] |
| D5402 | B0HCMM000019 | DIODE | [M] |
| D5403 | B0HCMM000019 | DIODE | [M] |
| D5404 | B0HCMM000019 | DIODE | [M] |
| D5501 | MA2J11100L | DIODE | [M] |
| D5502 | MA2J11100L | DIODE | [M] |
| D5503 | MAZ80560ML | DIODE | [M] |
| D5640 | MAZ81200ML | DIODE | [M] |
| D5643 | MA2J11100L | DIODE | [M] |
| D5644 | MA2J11100L | DIODE | [M] |
| D5645 | MA2J11100L | DIODE | [M] |
| D5701 | B0FBAR000041 | DIODE | [M] |
| D5702 | B0ZAZ0000052 | DIODE | [M] |
| D5721 | MAZ81800ML | DIODE | [M] |
| D5722 | B0BC019A0007 | DIODE | [M] |
| D5723 | MA2J11100L | DIODE | [M] |
| D5724 | MA2J11100L | DIODE | [M] |
| D5725 | B0BC6R100010 | DIODE | [M] |
| D5726 | B0EAKM000117 | DIODE | [M] |
| D5727 | MA2J11100L | DIODE | [M] |

| Ref. No. | Part No. | Part Name & Description | Remarks |
|---|---|---|---|
| D5728 | MA2J11100L | DIODE | [M] |
| D5729 | B0EAMM000057 | DIODE | [M] |
| D5730 | MA2YF8000L | DIODE | [M] |
| D5731 | B0EAMM000057 | DIODE | [M] |
| D5732 | B0BC035A0007 | DIODE | [M] |
| D5793 | B0HAMP000094 | DIODE | [M] |
| D5797 | MA2J72800L | DIODE | [M] |
| D5798 | B0EAMM000057 | DIODE | [M] |
| D5801 | B0HBSM000043 | DIODE | [M] |
| D5802 | B0HBSM000043 | DIODE | [M] |
| D5803 | B0HFRJ000012 | DIODE | [M] |
| D5804 | B0EAMM000057 | DIODE | [M] |
| D5805 | B0EAMM000057 | DIODE | [M] |
| D5806 | MAZ80750ML | DIODE | [M] |
| D5807 | MA2J11100L | DIODE | [M] |
| D5809 | MA2J11100L | DIODE | [M] |
| D5896 | B0EAMM000057 | DIODE | [M] |
| D5991 | B0ACCK000005 | DIODE | [M] |
| D7001 | MAZ81800ML | DIODE | [M] |
| D7002 | MAZ81800ML | DIODE | [M] |
| D7003 | MAZ83000HL | DIODE | [M] |
| D7004 | MAZ802400L | DIODE | [M] |
| D7005 | B0JCMD000010 | DIODE | [M] |
| D7006 | B0JAME000029 | DIODE | [M] |
| D7013 | B0ACCK000005 | DIODE | [M] |
| D7014 | B0ACCK000005 | DIODE | [M] |
| D7017 | B0ACCK000005 | DIODE | [M] |
| D7018 | B0ACCK000005 | DIODE | [M] |
| D7020 | B0ACCK000005 | DIODE | [M] |
| D7021 | B0ACCK000005 | DIODE | [M] |
| D7022 | B0JCPG000005 | DIODE | [M] |
| D7023 | B0ACCK000005 | DIODE | [M] EB/EG |
| D7023 | MAZ82700LL | DIODE | [M] EE |
| D7024 | MAZ80750ML | DIODE | [M] |
| D7027 | B0JCPG000005 | DIODE | [M] |
| D7028 | B0ACCK000005 | DIODE | [M] |
| D7031 | MAZ80820ML | DIODE | [M] |
| D7036 | MAZ80680ML | DIODE | [M] |
| D7037 | MAZ81000HL | DIODE | [M] |
| D7038 | MAZ81300HL | DIODE | [M] |
| D7722 | B0JCPG000005 | DIODE | [M] |
| D7726 | B0JAME000029 | DIODE | [M] |
| D7727 | B0JCPG000005 | DIODE | [M] |
| D8011 | B0ACCK000005 | DIODE | [M] |
| D8012 | B0ACCK000005 | DIODE | [M] |
| D8013 | B0ACCK000005 | DIODE | [M] |
| D8014 | B0ACCK000005 | DIODE | [M] |
| DZ5701 | ERZV10V511CS | ZNR | [M] ⚠ |
| | | | |
| | | VARISTORS | |
| | | | |
| VA2101 | EZAEG2A50AX | ESD SUPRESSOR | [M] |
| VA2102 | EZAEG2A50AX | ESD SUPRESSOR | [M] |
| VA2103 | EZAEG2A50AX | ESD SUPRESSOR | [M] |
| VA2104 | EZAEG2A50AX | ESD SUPRESSOR | [M] |
| VA2105 | EZAEG2A50AX | ESD SUPRESSOR | [M] |
| VA2106 | EZAEG2A50AX | ESD SUPRESSOR | [M] |
| VA2107 | EZAEG2A50AX | ESD SUPRESSOR | [M] |
| VA2108 | EZAEG2A50AX | ESD SUPRESSOR | [M] |
| VA2109 | EZJZ0V80008B | VARISTOR | [M] |
| VA2110 | EZJZ0V80008B | VARISTOR | [M] |
| VA2111 | EZJZ0V80008B | VARISTOR | [M] |
| VA2112 | EZJZ0V80008B | VARISTOR | [M] |
| VA2113 | EZJZ0V80008B | VARISTOR | [M] |
| VA2201 | EZAEG2A50AX | ESD SUPRESSOR | [M] |
| VA2202 | EZAEG2A50AX | ESD SUPRESSOR | [M] |
| VA2203 | EZAEG2A50AX | ESD SUPRESSOR | [M] |
| VA2204 | EZAEG2A50AX | ESD SUPRESSOR | [M] |
| VA2205 | EZAEG2A50AX | ESD SUPRESSOR | [M] |
| VA2206 | EZAEG2A50AX | ESD SUPRESSOR | [M] |
| VA2207 | EZAEG2A50AX | ESD SUPRESSOR | [M] |
| VA2208 | EZAEG2A50AX | ESD SUPRESSOR | [M] |

| Ref. No. | Part No. | Part Name & Description | Remarks |
|---|---|---|---|
| VA2209 | EZJZ0V80008B | VARISTOR | [M] |
| VA2210 | EZJZ0V80008B | VARISTOR | [M] |
| VA2211 | EZJZ0V80008B | VARISTOR | [M] |
| VA2212 | EZJZ0V80008B | VARISTOR | [M] |
| VA2213 | EZAEG2A50AX | ESD SUPRESSOR | [M] |
| VA2214 | EZAEG2A50AX | ESD SUPRESSOR | [M] |
| VA2215 | EZAEG2A50AX | ESD SUPRESSOR | [M] |
| VA2216 | EZAEG2A50AX | ESD SUPRESSOR | [M] |
| VA2217 | EZAEG2A50AX | ESD SUPRESSOR | [M] |
| VA2218 | EZAEG2A50AX | ESD SUPRESSOR | [M] |
| VA2219 | EZAEG2A50AX | ESD SUPRESSOR | [M] |
| VA2220 | EZAEG2A50AX | ESD SUPRESSOR | [M] |
| VA2221 | EZJZ0V80008B | VARISTOR | [M] |
| VA2222 | EZJZ0V80008B | VARISTOR | [M] |
| VA2223 | EZJZ0V80008B | VARISTOR | [M] |
| VA2224 | EZJZ0V80008B | VARISTOR | [M] |
| VA2231 | EZAEG2A50AX | ESD SUPRESSOR | [M] |
| VA2232 | EZAEG2A50AX | ESD SUPRESSOR | [M] |
| VA2233 | EZAEG2A50AX | ESD SUPRESSOR | [M] |
| VA2234 | EZAEG2A50AX | ESD SUPRESSOR | [M] |
| VA2235 | EZAEG2A50AX | ESD SUPRESSOR | [M] |
| VA2236 | EZAEG2A50AX | ESD SUPRESSOR | [M] |
| VA2237 | EZAEG2A50AX | ESD SUPRESSOR | [M] |
| VA2238 | EZAEG2A50AX | ESD SUPRESSOR | [M] |
| VA2239 | EZJZ0V80008B | VARISTOR | [M] |
| VA2240 | EZJZ0V80008B | VARISTOR | [M] |
| VA2241 | EZJZ0V80008B | VARISTOR | [M] |
| VA2242 | EZJZ0V80008B | VARISTOR | [M] |
| | | | |
| | | VARIABLE RESISTORS | |
| | | | |
| VR501 | K9AA012A0004 | INPUT SELECTOR | [M] |
| VR621 | EVEKD2F3024B | VOLUME | [M] |
| | | | |
| | | SWITCHES | |
| | | | |
| S501 | EVQ21405RJ | SW POWER | [M] |
| S502 | EVQ21405RJ | SW SPEAKERS A | [M] |
| S503 | EVQ21405RJ | SW SURROUND | [M] |
| S504 | EVQ21405RJ | SW SPEAKERS B | [M] |
| S621 | EVQ21405RJ | SW RETURN/-SETUP | [M] |
| S622 | EVQ21405RJ | SW OK | [M] |
| S623 | EVQ21405RJ | SW TUNER DOWN | [M] |
| S624 | EVQ21405RJ | SW TUNER UP | [M] |
| | | | |
| | | CONNECTORS | |
| | | | |
| CN611 | K1FY124DA001 | OPTION PORT CONNECTOR | [M] |
| CN2001 | K1MN10BA0147 | 10P CONNECTOR | [M] |
| CN2002 | K1MY10AA0021 | 10P CONNECTOR | [M] |
| CN2003 | K1MN15AA0046 | 15P CONNECTOR | [M] |
| CN2004 | K1MN16AA0046 | 16P CONNECTOR | [M] |
| CN2005 | K1KA07AA0083 | 7P CONNECTOR | [M] |
| CN3001 | K1MN15AA0076 | 15P CONNECTOR | [M] |
| CN3002 | K1MN20A00081 | 20P CONNECTOR | [M] |
| CN3004 | K1MN11AA0076 | 11P CONNECTOR | [M] |
| CN3005 | K1MN24AA0076 | 24P CONNECTOR | [M] |
| CN3006 | K1MY10AA0021 | 10P CONNECTOR | [M] |
| CN5050 | K1MN17AA0004 | 17P CONNECTOR | [M] |
| CN5500 | K1KA08AA0180 | 8P CONNECTOR | [M] |
| CN5501 | K1KA03AA0301 | 3P CONNECTOR | [M] |
| CN5802 | K1KA11AA0194 | 11P CONNECTOR | [M] |
| CN5991 | K1KA03AA0301 | 3P CONNECTOR | [M] |
| CN6301 | K1MN22AA0004 | 22P CONNECTOR | [M] |
| CN6302 | K1MY22A00003 | 22P CONNECTOR | [M] |
| CN7001 | K1YZ11000002 | 11P CABLE HOLDER | [M] |
| CN8002 | K1MY13BA0076 | 13P CONNECTOR | [M] |
| CN8003 | K1MN17AA0004 | 17P CONNECTOR | [M] |
| CN8004 | K1MN17AA0004 | 17P CONNECTOR | [M] |
| CN8005 | K1MY10AA0021 | 10P CONNECTOR | [M] |
| CNA610 | K1MN14BA0004 | 14P CONNECTOR | [M] |
| CNB610 | K1MN14AA0003 | 14P CONNECTOR | [M] |
| JW4602 | K1KA12BA0126 | 12P CONNECTOR | [M] |

| Ref. No. | Part No. | Part Name & Description | Remarks |
|---|---|---|---|
| JW4603 | K1KA09BA0125 | 9P CONNECTOR | [M] |
| PA501 | K1MN30BA0005 | 30P CONNECTOR | [M] |
| PA1001 | K1MN13BA0004 | 13P CONNECTOR | [M] |
| PA1002 | K1KA02BA0061 | 2P CONNECTOR | [M] |
| PA1051 | K1KA03BA0061 | 3P CONNECTOR | [M] |
| PB501 | K1MN30AA0004 | 30P CONNECTOR | [M] |
| PB502 | K1MP07A00002 | 7P CONNECTOR | [M] |
| PB603 | K1MP05A00009 | 5P CONNECTOR | [M] |
| PB1001 | K1MN13AA0003 | 13P CONNECTOR | [M] |
| PB1002 | K1KA05AA0193 | 5P CONNECTOR | [M] |
| PB2004 | K1MN16AA0003 | 16P CONNECTOR | [M] |
| PB3002 | K1MN20AA0004 | 20P CONNECTOR | [M] |
| PB3005 | K1MN24AA0004 | 24P CONNECTOR | [M] |
| PB4401 | K1MN11AA0003 | 11P CONNECTOR | [M] |
| PB8005 | K1MN22AA0004 | 22P CONNECTOR | [M] |
| | | | |
| | | COILS & INDUCTORS | |
| | | | |
| L201 | J0JBC0000041 | INDUCTOR | [M] EB/EG |
| L202 | J0JBC0000041 | INDUCTOR | [M] EB/EG |
| L501 | J0JBC0000033 | INDUCTOR | [M] |
| L502 | J0JBC0000033 | INDUCTOR | [M] |
| L503 | J0JBC0000033 | INDUCTOR | [M] |
| L601 | J0JBC0000014 | INDUCTOR | [M] |
| L602 | J0JBC0000014 | INDUCTOR | [M] |
| L603 | J0JBC0000014 | INDUCTOR | [M] |
| L1001 | J0JBC0000033 | INDUCTOR | [M] |
| L1002 | J0JBC0000033 | INDUCTOR | [M] |
| L1003 | J0JBC0000033 | INDUCTOR | [M] |
| L1004 | J0JBC0000033 | INDUCTOR | [M] |
| L1005 | J0JBC0000033 | INDUCTOR | [M] |
| L1051 | J0JBC0000033 | INDUCTOR | [M] |
| L1052 | J0JBC0000033 | INDUCTOR | [M] |
| L1053 | J0JBC0000033 | INDUCTOR | [M] |
| L1054 | J0JBC0000033 | INDUCTOR | [M] |
| L1055 | J0JBC0000033 | INDUCTOR | [M] |
| L1056 | J0JBC0000033 | INDUCTOR | [M] |
| L2101 | J0MAB0000225 | INDUCTOR | [M] |
| L2102 | J0MAB0000225 | INDUCTOR | [M] |
| L2103 | J0MAB0000225 | INDUCTOR | [M] |
| L2104 | J0MAB0000225 | INDUCTOR | [M] |
| L2231 | G1CR82KA0010 | INDUCTOR | [M] |
| L3601 | J0JHC0000032 | INDUCTOR | [M] |
| L3602 | G1A220G00006 | COIL | [M] |
| L4403 | G1C1R0MA0061 | INDUCTOR | [M] |
| L4404 | G1C1R0MA0061 | INDUCTOR | [M] |
| L4601 | G0B9R5K00003 | LINE FILTER | [M] |
| L4602 | G0B9R5K00003 | LINE FILTER | [M] |
| L4603 | G0B9R5K00003 | LINE FILTER | [M] |
| L4604 | G0B9R5K00003 | LINE FILTER | [M] |
| L4605 | G0B9R5K00003 | LINE FILTER | [M] |
| L4606 | G0B9R5K00003 | LINE FILTER | [M] |
| L4607 | G0B9R5K00003 | LINE FILTER | [M] |
| L4608 | G0B9R5K00003 | LINE FILTER | [M] |
| L4609 | G0B9R5K00003 | LINE FILTER | [M] |
| L5000 | G0A150L00003 | CHOKE COIL | [M] |
| L5200 | G0A150L00003 | CHOKE COIL | [M] |
| L5300 | G0A150L00003 | CHOKE COIL | [M] |
| L5400 | G0A150L00003 | CHOKE COIL | [M] |
| L5500 | J0JKB0000020 | INDUCTOR | [M] |
| L5501 | J0JKB0000020 | INDUCTOR | [M] |
| L5701 | ELF15N035AN | LINE FILTER | [M] ⚠ |
| L5702 | ELF22V020E | LINE FILTER | [M] ⚠ |
| L5703 | ELF21N024E | LINE FILTER | [M] ⚠ |
| L6930 | G0A220GA0026 | CHOKE COIL | [M] |
| L7001 | G0C390JA0055 | INDUCTOR | [M] |
| L7002 | G0A220GA0026 | CHOKE COIL | [M] |
| L7006 | G0A220GA0026 | CHOKE COIL | [M] |
| L7007 | G0A220GA0026 | CHOKE COIL | [M] |
| L7008 | G0A220GA0026 | CHOKE COIL | [M] |
| L7009 | G0A220GA0026 | CHOKE COIL | [M] |

| Ref. No. | Part No. | Part Name & Description | Remarks |
|---|---|---|---|
| L7010 | G0A220GA0026 | CHOKE COIL | [M] |
| L7014 | G0A220GA0026 | CHOKE COIL | [M] |
| L7022 | G0A330ZA0045 | CHOKE COIL | [M] |
| L7027 | G0A330ZA0045 | CHOKE COIL | [M] |
| L7722 | G0A330ZA0045 | CHOKE COIL | [M] |
| L7727 | G0A330ZA0045 | CHOKE COIL | [M] |
| LB1001 | J0JBC0000033 | INDUCTOR | [M] |
| LB1002 | J0JBC0000033 | INDUCTOR | [M] |
| LB1051 | J0JBC0000033 | INDUCTOR | [M] |
| LB1052 | J0JBC0000033 | INDUCTOR | [M] |
| LB1053 | J0JBC0000033 | INDUCTOR | [M] |
| LB1054 | J0JBC0000033 | INDUCTOR | [M] |
| LB1055 | J0JBC0000033 | INDUCTOR | [M] |
| LB1056 | J0JBC0000033 | INDUCTOR | [M] |
| LB1057 | J0JBC0000033 | INDUCTOR | [M] |
| LB1058 | J0JBC0000033 | INDUCTOR | [M] |
| LB2001 | J0JCC0000078 | INDUCTOR | [M] |
| LB2002 | J0JCC0000078 | INDUCTOR | [M] |
| LB2003 | J0JCC0000119 | INDUCTOR | [M] |
| LB2004 | J0JHC0000021 | INDUCTOR | [M] |
| LB2005 | J0JHC0000012 | INDUCTOR | [M] |
| LB2006 | J0JHC0000012 | INDUCTOR | [M] |
| LB2007 | J0JHC0000012 | INDUCTOR | [M] |
| LB2008 | J0JHC0000012 | INDUCTOR | [M] |
| LB2009 | J0JHC0000021 | INDUCTOR | [M] |
| LB2101 | J0JCC0000119 | INDUCTOR | [M] |
| LB2102 | J0JCC0000119 | INDUCTOR | [M] |
| LB2103 | J0JCC0000119 | INDUCTOR | [M] |
| LB2104 | J0JCC0000119 | INDUCTOR | [M] |
| LB2105 | J0JHC0000021 | INDUCTOR | [M] |
| LB2106 | J0JHC0000021 | INDUCTOR | [M] |
| LB2107 | J0JHC0000021 | INDUCTOR | [M] |
| LB2108 | J0JHC0000021 | INDUCTOR | [M] |
| LB2109 | J0JHC0000021 | INDUCTOR | [M] |
| LB2110 | J0JHC0000021 | INDUCTOR | [M] |
| LB2201 | J0JCC0000119 | INDUCTOR | [M] |
| LB2202 | J0JCC0000119 | INDUCTOR | [M] |
| LB2203 | J0JCC0000119 | INDUCTOR | [M] |
| LB2204 | J0JCC0000119 | INDUCTOR | [M] |
| LB2205 | J0JCC0000119 | INDUCTOR | [M] |
| LB2206 | J0JCC0000119 | INDUCTOR | [M] |
| LB2207 | J0JCC0000119 | INDUCTOR | [M] |
| LB2208 | J0JCC0000119 | INDUCTOR | [M] |
| LB2209 | J0JHC0000021 | INDUCTOR | [M] |
| LB2210 | J0JHC0000021 | INDUCTOR | [M] |
| LB2211 | J0JHC0000021 | INDUCTOR | [M] |
| LB2231 | J0JCC0000119 | INDUCTOR | [M] |
| LB2232 | J0JCC0000119 | INDUCTOR | [M] |
| LB2233 | J0JCC0000119 | INDUCTOR | [M] |
| LB2234 | J0JCC0000119 | INDUCTOR | [M] |
| LB2235 | J0JHC0000021 | INDUCTOR | [M] |
| LB2236 | J0JHC0000021 | INDUCTOR | [M] |
| LB2237 | J0JHC0000021 | INDUCTOR | [M] |
| LB2238 | J0JHC0000021 | INDUCTOR | [M] |
| LB3001 | J0JBC0000041 | INDUCTOR | [M] |
| LB3002 | J0JGC0000020 | INDUCTOR | [M] |
| LB3003 | J0JHC0000048 | INDUCTOR | [M] |
| LB3004 | J0JHC0000048 | INDUCTOR | [M] |
| LB3005 | J0JGC0000020 | INDUCTOR | [M] |
| LB3006 | J0JGC0000020 | INDUCTOR | [M] |
| LB3007 | J0JGC0000020 | INDUCTOR | [M] |
| LB3101 | J0JGC0000020 | INDUCTOR | [M] |
| LB3102 | J0JBC0000041 | INDUCTOR | [M] |
| LB3103 | J0JGC0000020 | INDUCTOR | [M] |
| LB3104 | J0JHC0000048 | INDUCTOR | [M] |
| LB3105 | J0JHC0000048 | INDUCTOR | [M] |
| LB3106 | J0JGC0000020 | INDUCTOR | [M] |
| LB3107 | J0JGC0000020 | INDUCTOR | [M] |
| LB3108 | J0JHC0000048 | INDUCTOR | [M] |
| LB3109 | J0JHC0000048 | INDUCTOR | [M] |
| LB3201 | J0JBC0000041 | INDUCTOR | [M] |
| LB3202 | J0JBC0000041 | INDUCTOR | [M] |
| LB3401 | J0JGC0000020 | INDUCTOR | [M] |

| Ref. No. | Part No. | Part Name & Description | Remarks |
|---|---|---|---|
| LB3402 | J0JGC0000020 | INDUCTOR | [M] |
| LB3403 | J0JHC0000048 | INDUCTOR | [M] |
| LB3404 | J0JHC0000048 | INDUCTOR | [M] |
| LB3405 | J0JHC0000048 | INDUCTOR | [M] |
| LB3406 | J0JGC0000020 | INDUCTOR | [M] |
| LB3407 | J0JGC0000020 | INDUCTOR | [M] |
| LB3408 | J0JGC0000020 | INDUCTOR | [M] |
| LB3409 | J0JHC0000048 | INDUCTOR | [M] |
| LB3410 | J0JHC0000048 | INDUCTOR | [M] |
| LB3501 | J0JBC0000041 | INDUCTOR | [M] |
| LB3502 | J0JBC0000041 | INDUCTOR | [M] |
| LB3551 | J0JGC0000020 | INDUCTOR | [M] |
| LB3601 | J0JHC0000032 | INDUCTOR | [M] |
| LB3602 | J0JHC0000032 | INDUCTOR | [M] |
| LB7001 | J0JBC0000041 | INDUCTOR | [M] |
| LB7002 | J0JBC0000041 | INDUCTOR | [M] |
| LB7003 | J0JBC0000014 | INDUCTOR | [M] |
| LB8501 | J0JBC0000014 | INDUCTOR | [M] |
| LB8502 | J0JBC0000014 | INDUCTOR | [M] |
| LB8503 | J0JBC0000014 | INDUCTOR | [M] |
| LB8504 | J0JBC0000014 | INDUCTOR | [M] |
| LB8505 | J0JBC0000014 | INDUCTOR | [M] |
| LB8506 | J0JBC0000014 | INDUCTOR | [M] |
| LB8507 | J0JBC0000014 | INDUCTOR | [M] |
| LB8508 | J0JBC0000014 | INDUCTOR | [M] |
| LB8509 | J0JBC0000014 | INDUCTOR | [M] |
| LB8510 | J0JBC0000014 | INDUCTOR | [M] |
| LB8511 | J0JBC0000014 | INDUCTOR | [M] |
| LB8512 | J0JBC0000014 | INDUCTOR | [M] |
| LB8513 | J0JBC0000014 | INDUCTOR | [M] |
| LB8514 | J0JBC0000014 | INDUCTOR | [M] |
| LB8515 | J0JBC0000014 | INDUCTOR | [M] |
| LB8516 | J0JBC0000014 | INDUCTOR | [M] |
| LB8517 | J0JBC0000014 | INDUCTOR | [M] |
| LB8518 | J0JBC0000014 | INDUCTOR | [M] |
| LB8519 | J0JBC0000014 | INDUCTOR | [M] |
| LB8520 | J0JBC0000014 | INDUCTOR | [M] |
| LB8521 | J0JBC0000014 | INDUCTOR | [M] |
| LB8522 | J0JBC0000014 | INDUCTOR | [M] |
| LB8523 | J0JBC0000014 | INDUCTOR | [M] |
| LB8524 | J0JBC0000014 | INDUCTOR | [M] |
| LB8531 | J0JBC0000014 | INDUCTOR | [M] |
| LB8532 | J0JBC0000014 | INDUCTOR | [M] |
| LB8533 | J0JBC0000014 | INDUCTOR | [M] |
| LB8534 | J0JBC0000014 | INDUCTOR | [M] |
| LB8535 | J0JBC0000014 | INDUCTOR | [M] |
| LB8536 | J0JBC0000014 | INDUCTOR | [M] |
| | | | |
| | | TRANSFORMERS | |
| | | | |
| T5701 | ETS42BM1B6AC | TRANSFORMER | [M] ⚠ |
| T5751 | ETS19AB281AG | BACKUP TRANSFORMER | [M] ⚠ |
| T7001 | G4D1A0000094 | SWITCHING TRANSFORMER | [M] ⚠ |
| | | | |
| | | COMPONENT COMBINATION | |
| | | | |
| IR501 | B3RAD0000146 | REMOTE CONTROL SENSOR | [M] |
| | | | |
| ZA5701 | K3GE1ZZ00001 | FUSE HOLDER | [M] |
| ZA5702 | K3GE1ZZ00001 | FUSE HOLDER | [M] |
| | | | |
| Z101 | ENG07825QF | TUNER PACK | [M] |
| | | | |
| | | PHOTO COUPLERS | |
| | | | |
| PC5701 | B3PBA0000402 | PHOTO COUPLER | [M] ⚠ |
| PC5702 | B3PBA0000402 | PHOTO COUPLER | [M] ⚠ |
| PC5720 | B3PBA0000402 | PHOTO COUPLER | [M] ⚠ |
| PC5799 | B3PBA0000402 | PHOTO COUPLER | [M] ⚠ |
| | | | |
| | | RELAYS | |
| | | | |
| RY4601 | K6B2AGA00011 | RELAY | [M] |

| Ref. No. | Part No. | Part Name & Description | Remarks |
|---|---|---|---|
| RY4602 | K6B2AGA00011 | RELAY | [M] |
| RY4603 | K6B2CGA00086 | RELAY | [M] |
| RY4604 | K6B2CGA00086 | RELAY | [M] |
| RY4605 | K6B2AGA00011 | RELAY | [M] |
| RY4606 | K6B2AGA00011 | RELAY | [M] |
| RY4607 | K6B2AGA00011 | RELAY | [M] |
| | | | |
| | | OSCILLATORS | |
| | | | |
| X201 | H0H433400002 | CRYSTAL OSCILLATOR | [M] EB/EG |
| X2002 | H2D400400018 | CRYSTAL OSCILLATOR | [M] |
| X2231 | H0J283500018 | CRYSTAL OSCILLATOR | [M] |
| X3401 | H0J240500038 | CRYSTAL OSCILLATOR | [M] |
| X3402 | H0J245500091 | CRYSTAL OSCILLATOR | [M] |
| X5500 | H2A6023A0011 | CRYSTAL OSCILLATOR | [M] |
| X5501 | H2A7003A0011 | CRYSTAL OSCILLATOR | [M] |
| X8001 | H2B100500004 | CRYSTAL OSCILLATOR | [M] |
| X8002 | H0A327200097 | CRYSTAL OSCILLATOR | [M] |
| | | | |
| | | FL DISPLAY | |
| | | | |
| FL501 | A2BB00000156 | FL DISPLAY | [M] |
| | | | |
| | | FUSE | |
| | | | |
| F1 | K5D402BK0007 | FUSE | [M] ⚠ |
| IP7001 | K5H7512A0010 | IC PROTECTOR | [M] ⚠ |
| | | | |
| | | THERMISTORS | |
| | | | |
| TH5701 | D4CAA5R10001 | THERMISTOR | [M] ⚠ |
| TH5860 | D4CC11040013 | THERMISTOR | [M] ⚠ |
| | | | |
| | | JACKS | |
| | | | |
| JK501 | K1CB104A0018 | JK S-VIDEO | [M] |
| JK502 | K2HC1YYA0008 | JK SETUP MIC | [M] |
| JK503 | K2HA307A0006 | JK VIDEO AUDIO | [M] |
| JK601 | K2HB103J0070 | JK HP | [M] |
| JK1001 | K2HA306B0084 | JK VID (DVD REC OUT/ IN) / (VCR IN) | [M] |
| JK1002 | K2HA2YYB0009 | JK VID (TV MON OUT) / (DVD PLYR IN) | [M] |
| JK1003 | K2HA2YYB0009 | JK VID (GAME IN) / (CABLE/SAT IN) | [M] |
| JK1004 | K2HA608B0012 | JK COM VID (TV MON OUT) / (1 DVD REC IN) | [M] |
| JK1005 | K2HA608B0012 | JK COM VID (2 DVD PLY IN) / (3 CABLE/SAT IN) | [M] |
| JK1051 | K2HZ213B0002 | JK SVID (GAME IN) / (CABLE/SAT) | [M] |
| JK1052 | K2HZ213B0002 | JK SVID (TV MON OUT) / (DVD PLYR IN) | [M] |
| JK1053 | K2HZ318B0002 | JK SVID (DVD REC OUT/IN ) / (VCR IN) | [M] |
| JK2101 | K1FA119E0013 | JK HDMI OUT | [M] |
| JK2201 | K1FA119E0013 | JK HDMI 1 (DVD REC IN) | [M] |
| JK2202 | K1FA119E0013 | JK HDMI 2 (DVD PLYR IN) | [M] |
| JK2203 | K1FA119E0013 | JK HDMI 3 (CABLE/SAT IN) | [M] |
| JK4001 | K2HA204B0147 | JK AUD (CD IN) | [M] |
| JK4002 | K2HA406B0033 | JK AUD (CTR/ SWFR/SUR/BCK) | [M] |
| JK4003 | K4AK04H00001 | JK AUD (SUR FRT) | [M] |
| JK4004 | K4AK04H00001 | JK AUD (DVD OUT/ IN) | [M] |
| JK4005 | K4AK04H00001 | JK AUD (VCR IN) / (CABLE/SAT IN) | [M] |
| JK4006 | K4AK04H00001 | JK AUD (GAME IN) / (TV IN) | [M] |
| JK4007 | K2HA103B0031 | JK AUD (SWFR OUT) | [M] |
| JK4401 | K2HA102B0094 | JK DIG IN (COAX CD) | [M] |
| JK4402 | B3RAB0000044 | JK DIG IN OPT1 (DVD REC) | [M] |
| JK4403 | B3RAB0000044 | JK DIG IN OPT2 (DVD PLYR) | [M] |
| JK4404 | B3RAB0000044 | JK DIG IN OPT3 (TV) | [M] |
| JK4601 | RXQ1297 | JK SUR BCK SPK | [M] |
| JK4602 | RXQ1296 | JK FRT B (L) CTR/ SUR/ SPK | [M] |
| JK4603 | RXQ1324 | JK FRT A/FRT B | [M] |

| Ref. No. | Part No. | Part Name & Description | Remarks |
|---|---|---|---|
| P5701 | K2AA2B000017 | AC INLET | [M] ⚠ |
| | | | |
| | | EARTH TERMINALS | |
| | | | |
| E7001 | K4CZ01000027 | TERMINAL | [M] |
| ZJ5400 | K4CZ01000027 | TERMINAL | [M] |
| ZJ5410 | K4CZ01000027 | TERMINAL | [M] |
| ZJ5701 | K4CZ01000027 | TERMINAL | [M] |
| ZJ5801 | K4CZ01000027 | TERMINAL | [M] |
| ZJ5803 | K4CZ01000027 | TERMINAL | [M] |
| | | | |
| | | CHIP JUMPERS | |
| | | | |
| K2 | ERJ3GEY0R00V | 0 1/10W | [M] |
| K3 | ERJ3GEY0R00V | 0 1/10W | [M] |
| K5202 | ERJ3GEY0R00V | 0 1/10W | [M] |
| K5252 | ERJ3GEY0R00V | 0 1/10W | [M] |
| K5253 | ERJ3GEY0R00V | 0 1/10W | [M] |
| K5255 | ERJ3GEY0R00V | 0 1/10W | [M] |
| K5302 | ERJ3GEY0R00V | 0 1/10W | [M] |
| K5500 | ERJ3GEY0R00V | 0 1/10W | [M] |
| K5778 | ERJ3GEY0R00V | 0 1/10W | [M] |
| K5779 | ERJ6GEY0R00V | 0 1/8W | [M] |
| K5801 | ERJ3GEY0R00V | 0 1/10W | [M] |
| K8001 | ERJ3GEY0R00V | 0 1/10W | [M] EB/EG |
| K8004 | ERJ3GEY0R00V | 0 1/10W | [M] EE |
| L4401 | ERJ6GEY0R00V | 0 1/8W | [M] |
| L4402 | ERJ6GEY0R00V | 0 1/8W | [M] |
| LB501 | ERJ3GEY0R00V | 0 1/10W | [M] |
| LB502 | ERJ3GEY0R00V | 0 1/10W | [M] |
| LB503 | ERJ3GEY0R00V | 0 1/10W | [M] |
| LB504 | ERJ3GEY0R00V | 0 1/10W | [M] |
| LB505 | ERJ3GEY0R00V | 0 1/10W | [M] |
| LB506 | ERJ3GEY0R00V | 0 1/10W | [M] |
| LB507 | ERJ3GEY0R00V | 0 1/10W | [M] |
| LB508 | ERJ3GEY0R00V | 0 1/10W | [M] |
| LB509 | ERJ3GEY0R00V | 0 1/10W | [M] |
| LB510 | ERJ3GEY0R00V | 0 1/10W | [M] |
| LB511 | ERJ3GEY0R00V | 0 1/10W | [M] |
| LB512 | ERJ3GEY0R00V | 0 1/10W | [M] |
| LB513 | ERJ3GEY0R00V | 0 1/10W | [M] |
| LB514 | ERJ3GEY0R00V | 0 1/10W | [M] |
| LB515 | ERJ3GEY0R00V | 0 1/10W | [M] |
| LB516 | ERJ3GEY0R00V | 0 1/10W | [M] |
| LB517 | ERJ3GEY0R00V | 0 1/10W | [M] |
| LB518 | ERJ3GEY0R00V | 0 1/10W | [M] |
| LB519 | ERJ3GEY0R00V | 0 1/10W | [M] |
| LB520 | ERJ3GEY0R00V | 0 1/10W | [M] |
| LB521 | ERJ3GEY0R00V | 0 1/10W | [M] |
| LB522 | ERJ3GEY0R00V | 0 1/10W | [M] |
| LB523 | ERJ3GEY0R00V | 0 1/10W | [M] |
| LB524 | ERJ3GEY0R00V | 0 1/10W | [M] |
| LB525 | ERJ3GEY0R00V | 0 1/10W | [M] |
| LB6301 | ERJ3GEY0R00V | 0 1/10W | [M] |
| LB6302 | ERJ3GEY0R00V | 0 1/10W | [M] |
| LB6303 | ERJ3GEY0R00V | 0 1/10W | [M] |
| LB6304 | ERJ3GEY0R00V | 0 1/10W | [M] |
| LB6305 | ERJ3GEY0R00V | 0 1/10W | [M] |
| LB6306 | ERJ3GEY0R00V | 0 1/10W | [M] |
| LB6307 | ERJ3GEY0R00V | 0 1/10W | [M] |
| LB6308 | ERJ3GEY0R00V | 0 1/10W | [M] |
| LB6309 | ERJ3GEY0R00V | 0 1/10W | [M] |
| LB6310 | ERJ3GEY0R00V | 0 1/10W | [M] |
| LB6311 | ERJ3GEY0R00V | 0 1/10W | [M] |
| LB6312 | ERJ3GEY0R00V | 0 1/10W | [M] |
| LB6313 | ERJ3GEY0R00V | 0 1/10W | [M] |
| LB6314 | ERJ3GEY0R00V | 0 1/10W | [M] |
| LB6315 | ERJ3GEY0R00V | 0 1/10W | [M] |
| LB6316 | ERJ3GEY0R00V | 0 1/10W | [M] |
| LB6317 | ERJ3GEY0R00V | 0 1/10W | [M] |
| LB6318 | ERJ3GEY0R00V | 0 1/10W | [M] |
| LB6319 | ERJ3GEY0R00V | 0 1/10W | [M] |

| Ref. No. | Part No. | Part Name & Description | Remarks |
|---|---|---|---|
| LB6320 | ERJ3GEY0R00V | 0 1/10W | [M] |
| LB6321 | ERJ3GEY0R00V | 0 1/10W | [M] |
| LB6322 | ERJ3GEY0R00V | 0 1/10W | [M] |
| W170 | ERJ8GEY0R00V | 0 1/4W | [M] |
| W5007 | ERJ6GEY0R00V | 0 1/8W | [M] |
| W5032 | ERJ8GEY0R00V | 0 1/4W | [M] |
| W5059 | ERJ6GEY0R00V | 0 1/8W | [M] |
| W5071 | ERJ3GEY0R00V | 0 1/10W | [M] |
| W5098 | ERJ3GEY0R00V | 0 1/10W | [M] |
| W5780 | ERJ6GEY0R00V | 0 1/8W | [M] |
| W5801 | ERJ3GEY0R00V | 0 1/10W | [M] |
| W5803 | ERJ6GEY0R00V | 0 1/8W | [M] |
| W5804 | ERJ3GEY0R00V | 0 1/10W | [M] |
| W5805 | ERJ6GEY0R00V | 0 1/8W | [M] |
| W5806 | ERJ6GEY0R00V | 0 1/8W | [M] |
| | | | |
| | | RESISTORS | |
| | | | |
| R101 | ERJ3GEYJ102V | 1K 1/10W | [M] |
| R102 | ERJ3GEYJ102V | 1K 1/10W | [M] |
| R201 | ERJ3GEYJ102V | 1K 1/10W | [M] EB/EG |
| R202 | ERJ3GEYJ104V | 100K 1/10W | [M] EB/EG |
| R203 | ERJ3GEYJ102V | 1K 1/10W | [M] EB/EG |
| R204 | ERJ3GEYJ103V | 10K 1/10W | [M] EB/EG |
| R205 | ERJ3GEYJ102V | 1K 1/10W | [M] EB/EG |
| R206 | ERJ3GEYJ104V | 100K 1/10W | [M] EB/EG |
| R207 | ERJ3GEYJ102V | 1K 1/10W | [M] EB/EG |
| R208 | ERJ3GEYJ102V | 1K 1/10W | [M] EB/EG |
| R209 | ERJ3GEYJ471V | 470 1/10W | [M] EB/EG |
| R501 | ERJ3GEYJ102V | 1K 1/10W | [M] |
| R502 | ERJ3GEYJ102V | 1K 1/10W | [M] |
| R503 | ERJ3GEYJ102V | 1K 1/10W | [M] |
| R504 | ERJ3GEYJ563V | 56K 1/10W | [M] |
| R505 | ERJ3GEYJ104V | 100K 1/10W | [M] |
| R506 | ERJ3GEYJ104V | 100K 1/10W | [M] |
| R507 | ERJ3GEYJ104V | 100K 1/10W | [M] |
| R508 | ERJ3GEYJ102V | 1K 1/10W | [M] |
| R509 | ERJ3GEYJ122V | 1.2K 1/10W | [M] |
| R512 | ERJ3GEYJ561V | 560 1/10W | [M] |
| R513 | ERJ3GEYJ181V | 180 1/10W | [M] |
| R514 | ERJ3GEYJ391V | 390 1/10W | [M] |
| R515 | ERJ3GEYJ391V | 390 1/10W | [M] |
| R516 | ERJ3GEYJ471V | 470 1/10W | [M] EB/EG |
| R516 | ERJ3GEYJ182V | 1.8K 1/10W | [M] EE |
| R517 | ERJ3GEYJ150V | 15 1/10W | [M] |
| R518 | ERJ3GEYJ470V | 47 1/10W | [M] |
| R519 | ERJ3GEYJ750V | 75 1/10W | [M] |
| R520 | ERJ3GEYJ104V | 100K 1/10W | [M] |
| R521 | ERJ3GEYJ103V | 10K 1/10W | [M] |
| R522 | ERJ3GEYJ750V | 75 1/10W | [M] |
| R523 | ERJ3GEY0R00V | 0 1/10W | [M] |
| R524 | ERJ3GEY0R00V | 0 1/10W | [M] |
| R525 | ERJ3GEYJ472V | 4.7K 1/10W | [M] |
| R526 | ERJ3GEYJ202V | 2.0K 1/10W | [M] |
| R527 | ERJ3GEYJ472V | 4.7K 1/10W | [M] |
| R528 | ERJ3GEYJ153V | 15K 1/10W | [M] |
| R529 | ERJ3GEYJ333V | 33K 1/10W | [M] |
| R530 | ERJ3GEYJ332V | 3.3K 1/10W | [M] |
| R531 | ERJ3GEYJ822V | 8.2K 1/10W | [M] |
| R532 | ERJ3GEYJ332V | 3.3K 1/10W | [M] |
| R533 | ERJ3GEYJ332V | 3.3K 1/10W | [M] |
| R534 | ERJ3GEYJ682V | 6.8K 1/10W | [M] |
| R535 | ERJ3GEYJ104V | 100K 1/10W | [M] |
| R536 | ERJ3GEYJ101V | 100 1/10W | [M] |
| R537 | ERJ3GEYJ102V | 1K 1/10W | [M] |

| Ref. No. | Part No. | Part Name & Description | Remarks |
|---|---|---|---|
| R538 | ERJ3GEYJ102V | 1K 1/10W | [M] |
| R539 | ERJ3GEYJ750V | 75 1/10W | [M] |
| R540 | ERJ3GEYJ103V | 10K 1/10W | [M] |
| R542 | ERJ3GEYJ181V | 180 1/10W | [M] |
| R543 | ERJ3GEYJ271V | 270 1/10W | [M] |
| R544 | ERJ3GEYJ271V | 270 1/10W | [M] |
| R545 | ERJ3GEYJ271V | 270 1/10W | [M] |
| R546 | ERJ3GEYJ271V | 270 1/10W | [M] |
| R547 | ERJ3GEYJ181V | 180 1/10W | [M] |
| R621 | ERJ3GEYJ102V | 1K 1/10W | [M] |
| R622 | ERJ3GEYJ122V | 1.2K 1/10W | [M] |
| R623 | ERJ3GEYJ152V | 1.5K 1/10W | [M] |
| R624 | ERJ3GEYJ182V | 1.8K 1/10W | [M] |
| R1001 | ERJ3GEYJ750V | 75 1/10W | [M] |
| R1002 | ERJ3GEYJ750V | 75 1/10W | [M] |
| R1003 | ERJ3GEYJ750V | 75 1/10W | [M] |
| R1004 | ERJ3GEYJ750V | 75 1/10W | [M] |
| R1005 | ERJ3GEYJ103V | 10K 1/10W | [M] |
| R1006 | ERJ3GEYJ103V | 10K 1/10W | [M] |
| R1007 | ERJ3GEYJ103V | 10K 1/10W | [M] |
| R1008 | ERJ3GEYJ750V | 75 1/10W | [M] |
| R1009 | ERJ3GEYJ102V | 1K 1/10W | [M] |
| R1010 | ERJ3GEYJ102V | 1K 1/10W | [M] |
| R1011 | ERJ3GEYJ102V | 1K 1/10W | [M] |
| R1012 | ERJ3GEYJ750V | 75 1/10W | [M] |
| R1013 | ERJ3GEYJ750V | 75 1/10W | [M] |
| R1014 | ERJ3GEYJ750V | 75 1/10W | [M] |
| R1015 | ERJ3GEYJ750V | 75 1/10W | [M] |
| R1016 | ERJ3GEYJ750V | 75 1/10W | [M] |
| R1017 | ERJ3GEYJ750V | 75 1/10W | [M] |
| R1018 | ERJ3GEYJ750V | 75 1/10W | [M] |
| R1019 | ERJ3GEYJ750V | 75 1/10W | [M] |
| R1020 | ERJ3GEYJ750V | 75 1/10W | [M] |
| R1021 | ERJ3GEYJ102V | 1K 1/10W | [M] |
| R1022 | ERJ3GEYJ102V | 1K 1/10W | [M] |
| R1023 | ERJ3GEYJ102V | 1K 1/10W | [M] |
| R1024 | ERJ3GEYJ182V | 1.8K 1/10W | [M] |
| R1025 | ERJ3GEYJ182V | 1.8K 1/10W | [M] |
| R1026 | ERJ3GEYJ153V | 15K 1/10W | [M] |
| R1027 | ERJ3GEYJ103V | 10K 1/10W | [M] |
| R1028 | ERJ3GEYJ750V | 75 1/10W | [M] |
| R1029 | ERJ3GEYJ750V | 75 1/10W | [M] |
| R1030 | ERJ3GEYJ750V | 75 1/10W | [M] |
| R1031 | ERJ3GEYJ473V | 47K 1/10W | [M] |
| R1032 | ERJ3GEYJ102V | 1K 1/10W | [M] |
| R1033 | ERJ3GEYJ750V | 75 1/10W | [M] |
| R1034 | ERJ3GEYJ750V | 75 1/10W | [M] |
| R1035 | ERJ3GEYJ750V | 75 1/10W | [M] |
| R1051 | ERJ3GEYJ102V | 1K 1/10W | [M] |
| R1052 | ERJ3GEYJ102V | 1K 1/10W | [M] |
| R1053 | ERJ3GEYJ102V | 1K 1/10W | [M] |
| R1054 | ERJ3GEYJ750V | 75 1/10W | [M] |
| R1055 | ERJ3GEYJ103V | 10K 1/10W | [M] |
| R1056 | ERJ3GEYJ750V | 75 1/10W | [M] |
| R1057 | ERJ3GEYJ103V | 10K 1/10W | [M] |
| R1058 | ERJ3GEYJ750V | 75 1/10W | [M] |
| R1059 | ERJ3GEYJ750V | 75 1/10W | [M] |
| R1060 | ERJ3GEYJ750V | 75 1/10W | [M] |
| R1061 | ERJ3GEYJ750V | 75 1/10W | [M] |
| R1062 | ERJ3GEYJ103V | 10K 1/10W | [M] |
| R1063 | ERJ3GEYJ103V | 10K 1/10W | [M] |
| R1064 | ERJ3GEYJ750V | 75 1/10W | [M] |
| R1065 | ERJ3GEYJ750V | 75 1/10W | [M] |
| R1066 | ERJ3GEYJ103V | 10K 1/10W | [M] |
| R1067 | ERJ3GEYJ750V | 75 1/10W | [M] |
| R1068 | ERJ3GEYJ103V | 10K 1/10W | [M] |
| R1069 | ERJ3GEYJ750V | 75 1/10W | [M] |
| R1070 | ERJ3GEYJ105V | 1M 1/10W | [M] |
| R1071 | ERJ3GEYJ750V | 75 1/10W | [M] |
| R1072 | ERJ3GEYJ750V | 75 1/10W | [M] |
| R1073 | ERJ3GEYJ750V | 75 1/10W | [M] |
| R1074 | ERJ3GEYJ103V | 10K 1/10W | [M] |
| R1075 | ERJ3GEYJ750V | 75 1/10W | [M] |

| Ref. No. | Part No. | Part Name & Description | Remarks |
|---|---|---|---|
| R1076 | ERJ3GEYJ103V | 10K 1/10W | [M] |
| R1077 | ERJ3GEYJ105V | 1M 1/10W | [M] |
| R1078 | ERJ3GEYJ750V | 75 1/10W | [M] |
| R1079 | ERJ3GEYJ750V | 75 1/10W | [M] |
| R1080 | ERJ3GEYJ473V | 47K 1/10W | [M] |
| R1081 | ERJ3GEYJ103V | 10K 1/10W | [M] |
| R1082 | ERJ3GEYJ102V | 1K 1/10W | [M] |
| R1105 | ERJ3GEYJ104V | 100K 1/10W | [M] |
| R1106 | ERJ3GEYJ472V | 4.7K 1/10W | [M] |
| R1107 | ERJ3GEYJ473V | 47K 1/10W | [M] |
| R1108 | ERJ3GEYJ473V | 47K 1/10W | [M] |
| R1109 | ERJ3GEYJ472V | 4.7K 1/10W | [M] |
| R1110 | ERJ3GEYJ104V | 100K 1/10W | [M] |
| R1114 | ERJ3RBD333V | 33K 1/16W | [M] |
| R1115 | ERJ3GEYJ103V | 10K 1/10W | [M] |
| R1116 | ERJ3RBD333V | 33K 1/16W | [M] |
| R1117 | ERJ3GEYJ103V | 10K 1/10W | [M] |
| R1118 | ERJ3GEYJ103V | 10K 1/10W | [M] |
| R1119 | ERJ3RBD333V | 33K 1/16W | [M] |
| R1120 | ERJ3GEYJ103V | 10K 1/10W | [M] |
| R1121 | ERJ3RBD333V | 33K 1/16W | [M] |
| R1122 | ERJ3GEYJ332V | 3.3K 1/10W | [M] |
| R1123 | ERJ3GEYJ332V | 3.3K 1/10W | [M] |
| R2001 | ERJ3GEYJ102V | 1K 1/10W | [M] |
| R2002 | ERJ3GEYJ104V | 100K 1/10W | [M] |
| R2003 | ERJ3GEYJ182V | 1.8K 1/10W | [M] |
| R2004 | ERJ3GEYJ101V | 100 1/10W | [M] |
| R2005 | ERJ3GEYJ103V | 10K 1/10W | [M] |
| R2006 | ERJ3GEYJ101V | 100 1/10W | [M] |
| R2007 | ERJ3GEYJ470V | 47 1/10W | [M] |
| R2008 | ERJ3GEYJ470V | 47 1/10W | [M] |
| R2009 | ERJ3GEYJ103V | 10K 1/10W | [M] |
| R2010 | ERJ3GEYJ101V | 100 1/10W | [M] |
| R2011 | ERJ3GEYJ101V | 100 1/10W | [M] |
| R2012 | ERJ3GEYJ101V | 100 1/10W | [M] |
| R2013 | ERJ3GEYJ101V | 100 1/10W | [M] |
| R2014 | ERJ3GEYJ473V | 47K 1/10W | [M] |
| R2015 | ERJ3GEYJ473V | 47K 1/10W | [M] |
| R2016 | ERJ3GEYJ472V | 4.7K 1/10W | [M] |
| R2017 | ERJ3GEYJ472V | 4.7K 1/10W | [M] |
| R2018 | ERJ3GEYJ472V | 4.7K 1/10W | [M] |
| R2019 | ERJ3GEYJ101V | 100 1/10W | [M] |
| R2020 | ERJ3GEYJ101V | 100 1/10W | [M] |
| R2021 | ERJ3GEYJ101V | 100 1/10W | [M] |
| R2022 | ERJ3GEYJ103V | 10K 1/10W | [M] |
| R2023 | ERJ3GEYJ470V | 47 1/10W | [M] |
| R2024 | ERJ3GEYJ470V | 47 1/10W | [M] |
| R2025 | ERJ3GEYJ101V | 100 1/10W | [M] |
| R2026 | ERJ3GEYJ101V | 100 1/10W | [M] |
| R2027 | ERJ3GEYJ182V | 1.8K 1/10W | [M] |
| R2028 | ERJ3GEYJ182V | 1.8K 1/10W | [M] |
| R2029 | ERJ3GEYJ102V | 1K 1/10W | [M] |
| R2030 | ERJ3GEYJ102V | 1K 1/10W | [M] |
| R2031 | ERJ3GEYJ472V | 4.7K 1/10W | [M] |
| R2032 | ERJ3GEYJ472V | 4.7K 1/10W | [M] |
| R2033 | ERJ3GEYJ101V | 100 1/10W | [M] |
| R2034 | ERJ3GEYJ101V | 100 1/10W | [M] |
| R2035 | ERJ3GEYJ101V | 100 1/10W | [M] |
| R2036 | ERJ3GEYJ101V | 100 1/10W | [M] |
| R2037 | ERJ3GEYJ101V | 100 1/10W | [M] |
| R2038 | ERJ3GEYJ101V | 100 1/10W | [M] |
| R2039 | ERJ3GEYJ101V | 100 1/10W | [M] |
| R2040 | ERJ3GEYJ101V | 100 1/10W | [M] |
| R2041 | ERJ3GEYJ103V | 10K 1/10W | [M] |
| R2042 | ERJ3GEYJ472V | 4.7K 1/10W | [M] |
| R2043 | ERJ3GEYJ472V | 4.7K 1/10W | [M] |
| R2044 | ERJ3GEYJ151V | 150 1/10W | [M] |
| R2045 | ERJ3GEYJ151V | 150 1/10W | [M] |
| R2046 | ERJ3GEYJ101V | 100 1/10W | [M] |
| R2047 | ERJ3GEYJ101V | 100 1/10W | [M] |
| R2048 | ERJ3GEYJ101V | 100 1/10W | [M] |
| R2049 | ERJ3GEYJ101V | 100 1/10W | [M] |
| R2050 | ERJ3GEYJ101V | 100 1/10W | [M] |

| Ref. No. | Part No. | Part Name & Description | Remarks |
|---|---|---|---|
| R2051 | ERJ3GEYJ101V | 100 1/10W | [M] |
| R2052 | ERJ3GEYJ101V | 100 1/10W | [M] |
| R2053 | ERJ3GEY0R00V | 0 1/10W | [M] |
| R2054 | ERJ3GEY0R00V | 0 1/10W | [M] |
| R2055 | ERJ3GEY0R00V | 0 1/10W | [M] |
| R2056 | ERJ3GEY0R00V | 0 1/10W | [M] |
| R2057 | ERJ3GEY0R00V | 0 1/10W | [M] |
| R2058 | ERJ3GEYJ102V | 1K 1/10W | [M] |
| R2059 | ERJ3GEYJ153V | 15K 1/10W | [M] |
| R2060 | ERJ3GEYJ153V | 15K 1/10W | [M] |
| R2061 | ERJ3GEYJ153V | 15K 1/10W | [M] |
| R2062 | ERJ3GEYJ183V | 18K 1/10W | [M] |
| R2065 | ERJ3GEYJ102V | 1K 1/10W | [M] |
| R2101 | ERJ3GEYJ102V | 1K 1/10W | [M] |
| R2102 | ERJ3GEYJ821V | 820 1/10W | [M] |
| R2103 | ERJ3GEYJ332V | 3.3K 1/10W | [M] |
| R2104 | ERJ3GEYJ273V | 27K 1/10W | [M] |
| R2105 | ERJ3GEYJ221V | 220 1/10W | [M] |
| R2106 | ERJ3GEYJ103V | 10K 1/10W | [M] |
| R2107 | ERJ3GEYJ224V | 220K 1/10W | [M] |
| R2108 | ERJ3GEYJ104V | 100K 1/10W | [M] |
| R2109 | ERJ3GEYJ103V | 10K 1/10W | [M] |
| R2110 | ERJ3GEYJ182V | 1.8K 1/10W | [M] |
| R2111 | ERJ3GEYJ101V | 100 1/10W | [M] |
| R2112 | ERJ3GEYJ182V | 1.8K 1/10W | [M] |
| R2113 | ERJ3GEYJ104V | 100K 1/10W | [M] |
| R2114 | ERJ3GEYJ473V | 47K 1/10W | [M] |
| R2115 | ERJ3GEYJ225V | 2.2M 1/10W | [M] |
| R2116 | ERJ3GEYJ473V | 47K 1/10W | [M] |
| R2117 | ERJ3GEYJ472V | 4.7K 1/10W | [M] |
| R2118 | ERJ3GEYJ104V | 100K 1/10W | [M] |
| R2120 | ERJ3GEYJ682V | 6.8K 1/10W | [M] |
| R2121 | ERJ3GEYJ682V | 6.8K 1/10W | [M] |
| R2122 | ERJ3GEYJ470V | 47 1/10W | [M] |
| R2123 | ERJ3GEYJ470V | 47 1/10W | [M] |
| R2124 | D1BB6980A006 | 698 1/16W | [M] |
| R2125 | ERJ3GEYJ472V | 4.7K 1/10W | [M] |
| R2126 | ERJ3GEYJ472V | 4.7K 1/10W | [M] |
| R2128 | ERJ3GEYJ102V | 1K 1/10W | [M] |
| R2129 | ERJ3GEYJ473V | 47K 1/10W | [M] |
| R2130 | ERJ3GEYJ330V | 33 1/10W | [M] |
| R2131 | ERJ3GEYJ330V | 33 1/10W | [M] |
| R2132 | ERJ3GEYJ330V | 33 1/10W | [M] |
| R2133 | ERJ3GEYJ330V | 33 1/10W | [M] |
| R2151 | ERJ3GEY0R00V | 0 1/10W | [M] |
| R2152 | ERJ3GEY0R00V | 0 1/10W | [M] |
| R2153 | ERJ3GEY0R00V | 0 1/10W | [M] |
| R2154 | ERJ3GEY0R00V | 0 1/10W | [M] |
| R2201 | ERJ3GEY0R00V | 0 1/10W | [M] |
| R2203 | ERJ3GEYJ104V | 100K 1/10W | [M] |
| R2204 | ERJ3GEYJ473V | 47K 1/10W | [M] |
| R2205 | ERJ3GEY0R00V | 0 1/10W | [M] |
| R2207 | ERJ3GEYJ104V | 100K 1/10W | [M] |
| R2208 | ERJ3GEYJ473V | 47K 1/10W | [M] |
| R2209 | ERJ3GEYJ472V | 4.7K 1/10W | [M] |
| R2210 | ERJ3GEYJ223V | 22K 1/10W | [M] |
| R2213 | ERJ3GEYJ751V | 750 1/10W | [M] |
| R2215 | ERJ3GEYJ470V | 47 1/10W | [M] |
| R2216 | ERJ3GEYJ470V | 47 1/10W | [M] |
| R2217 | ERJ3GEYJ102V | 1K 1/10W | [M] |
| R2218 | ERJ3GEYJ472V | 4.7K 1/10W | [M] |
| R2219 | ERJ3GEYJ472V | 4.7K 1/10W | [M] |
| R2220 | ERJ3GEYJ330V | 33 1/10W | [M] |
| R2221 | ERJ3GEYJ330V | 33 1/10W | [M] |
| R2222 | ERJ3GEYJ473V | 47K 1/10W | [M] |
| R2223 | ERJ3GEYJ823V | 82K 1/10W | [M] |
| R2224 | ERJ3GEYJ473V | 47K 1/10W | [M] |
| R2225 | ERJ3GEYJ823V | 82K 1/10W | [M] |
| R2231 | ERJ3GEY0R00V | 0 1/10W | [M] |
| R2232 | ERJ3GEYJ473V | 47K 1/10W | [M] |
| R2233 | ERJ3GEYJ104V | 100K 1/10W | [M] |
| R2234 | ERJ3GEYJ101V | 100 1/10W | [M] |
| R2235 | ERJ3GEYJ102V | 1K 1/10W | [M] |

| Ref. No. | Part No. | Part Name & Description | Remarks |
|---|---|---|---|
| R2236 | ERJ3GEYJ473V | 47K 1/10W | [M] |
| R2237 | ERJ3GEYJ823V | 82K 1/10W | [M] |
| R2238 | ERJ3GEYJ223V | 22K 1/10W | [M] |
| R2239 | ERJ3GEYJ223V | 22K 1/10W | [M] |
| R2240 | ERJ3GEYJ103V | 10K 1/10W | [M] |
| R2241 | ERJ3GEYJ223V | 22K 1/10W | [M] |
| R2242 | ERJ3GEYJ223V | 22K 1/10W | [M] |
| R2243 | ERJ3GEYJ103V | 10K 1/10W | [M] |
| R2244 | ERJ3GEYJ473V | 47K 1/10W | [M] |
| R2245 | ERJ3GEYJ470V | 47 1/10W | [M] |
| R2246 | ERJ3GEYJ470V | 47 1/10W | [M] |
| R2247 | ERJ3GEYJ473V | 47K 1/10W | [M] |
| R2248 | ERJ3GEYJ473V | 47K 1/10W | [M] |
| R2249 | ERJ3GEYJ102V | 1K 1/10W | [M] |
| R2250 | ERJ3GEYJ470V | 47 1/10W | [M] |
| R2251 | ERJ3GEYJ470V | 47 1/10W | [M] |
| R2252 | ERJ3GEYJ330V | 33 1/10W | [M] |
| R2253 | ERJ3GEYJ470V | 47 1/10W | [M] |
| R2254 | ERJ3GEYJ470V | 47 1/10W | [M] |
| R2255 | ERJ3GEYJ470V | 47 1/10W | [M] |
| R2256 | ERJ3GEYJ470V | 47 1/10W | [M] |
| R2257 | ERJ3GEYJ182V | 1.8K 1/10W | [M] |
| R2258 | ERJ3GEYJ182V | 1.8K 1/10W | [M] |
| R2259 | ERJ3GEYJ330V | 33 1/10W | [M] |
| R2260 | ERJ3GEYJ330V | 33 1/10W | [M] |
| R2261 | ERJ3GEYJ330V | 33 1/10W | [M] |
| R2262 | ERJ3GEYJ821V | 820 1/10W | [M] |
| R2263 | ERJ3GEYJ105V | 1M 1/10W | [M] |
| R2264 | ERJ3GEYJ472V | 4.7K 1/10W | [M] |
| R2265 | ERJ3GEYJ220V | 22 1/10W | [M] |
| R2266 | ERJ3GEYJ102V | 1K 1/10W | [M] |
| R2267 | ERJ3GEYJ472V | 4.7K 1/10W | [M] |
| R2269 | ERJ3GEYJ473V | 47K 1/10W | [M] |
| R2270 | ERJ2GEJ4R7X | 4.7 1/16W | [M] |
| R2271 | ERJ2GEJ4R7X | 4.7 1/16W | [M] |
| R2272 | ERJ2GEJ4R7X | 4.7 1/16W | [M] |
| R2273 | ERJ2GEJ4R7X | 4.7 1/16W | [M] |
| R2274 | ERJ2GEJ4R7X | 4.7 1/16W | [M] |
| R2275 | ERJ2GEJ4R7X | 4.7 1/16W | [M] |
| R2276 | ERJ2GEJ4R7X | 4.7 1/16W | [M] |
| R2277 | ERJ2GEJ4R7X | 4.7 1/16W | [M] |
| R2278 | ERJ3GEYJ330V | 33 1/10W | [M] |
| R3001 | ERJ3GEYJ220V | 22 1/10W | [M] |
| R3002 | ERJ3GEYJ220V | 22 1/10W | [M] |
| R3003 | ERJ3GEYJ220V | 22 1/10W | [M] |
| R3004 | ERJ3GEYJ220V | 22 1/10W | [M] |
| R3005 | ERJ3GEYJ220V | 22 1/10W | [M] |
| R3006 | ERJ3GEYJ220V | 22 1/10W | [M] |
| R3007 | ERJ3GEYJ220V | 22 1/10W | [M] |
| R3008 | ERJ3GEYJ220V | 22 1/10W | [M] |
| R3009 | ERJ3GEYJ220V | 22 1/10W | [M] |
| R3010 | ERJ3GEYJ220V | 22 1/10W | [M] |
| R3011 | ERJ3GEYJ220V | 22 1/10W | [M] |
| R3012 | ERJ3GEYJ220V | 22 1/10W | [M] |
| R3013 | ERJ3GEYJ220V | 22 1/10W | [M] |
| R3014 | ERJ3GEYJ220V | 22 1/10W | [M] |
| R3015 | ERJ3GEYJ220V | 22 1/10W | [M] |
| R3016 | ERJ3GEYJ220V | 22 1/10W | [M] |
| R3017 | ERJ3GEYJ220V | 22 1/10W | [M] |
| R3018 | ERJ3GEYJ220V | 22 1/10W | [M] |
| R3019 | ERJ3GEYJ220V | 22 1/10W | [M] |
| R3020 | ERJ3GEYJ220V | 22 1/10W | [M] |
| R3021 | ERJ3GEYJ220V | 22 1/10W | [M] |
| R3022 | ERJ3GEYJ220V | 22 1/10W | [M] |
| R3023 | ERJ3GEYJ472V | 4.7K 1/10W | [M] |
| R3024 | ERJ3GEYJ220V | 22 1/10W | [M] |
| R3025 | ERJ3GEYJ220V | 22 1/10W | [M] |
| R3026 | ERJ3GEYJ220V | 22 1/10W | [M] |
| R3027 | ERJ3GEYJ220V | 22 1/10W | [M] |
| R3028 | ERJ3GEYJ220V | 22 1/10W | [M] |
| R3029 | ERJ3GEYJ220V | 22 1/10W | [M] |
| R3030 | ERJ3GEYJ220V | 22 1/10W | [M] |
| R3031 | ERJ3GEYJ220V | 22 1/10W | [M] |

| Ref. No. | Part No. | Part Name & Description | Remarks |
|---|---|---|---|
| R3032 | ERJ3GEYJ220V | 22 1/10W | [M] |
| R3033 | ERJ3GEYJ220V | 22 1/10W | [M] |
| R3034 | ERJ3GEYJ220V | 22 1/10W | [M] |
| R3035 | ERJ3GEYJ220V | 22 1/10W | [M] |
| R3036 | ERJ3GEYJ220V | 22 1/10W | [M] |
| R3037 | ERJ3GEYJ220V | 22 1/10W | [M] |
| R3038 | ERJ3GEYJ220V | 22 1/10W | [M] |
| R3039 | ERJ3GEYJ220V | 22 1/10W | [M] |
| R3040 | ERJ3GEYJ220V | 22 1/10W | [M] |
| R3041 | ERJ3GEYJ220V | 22 1/10W | [M] |
| R3043 | ERJ3GEYJ103V | 10K 1/10W | [M] |
| R3044 | ERJ3GEYJ103V | 10K 1/10W | [M] |
| R3045 | ERJ3GEYJ220V | 22 1/10W | [M] |
| R3046 | ERJ3GEYJ103V | 10K 1/10W | [M] |
| R3047 | ERJ3GEYJ220V | 22 1/10W | [M] |
| R3048 | ERJ3GEYJ220V | 22 1/10W | [M] |
| R3049 | ERJ3GEYJ220V | 22 1/10W | [M] |
| R3052 | ERJ3GEYJ220V | 22 1/10W | [M] |
| R3053 | ERJ3GEYJ220V | 22 1/10W | [M] |
| R3054 | ERJ3GEYJ220V | 22 1/10W | [M] |
| R3055 | ERJ3GEYJ220V | 22 1/10W | [M] |
| R3056 | ERJ3GEYJ220V | 22 1/10W | [M] |
| R3057 | ERJ3GEYJ330V | 33 1/10W | [M] |
| R3058 | ERJ3GEYJ330V | 33 1/10W | [M] |
| R3059 | ERJ3GEYJ220V | 22 1/10W | [M] |
| R3060 | ERJ3GEYJ220V | 22 1/10W | [M] |
| R3061 | ERJ3GEYJ220V | 22 1/10W | [M] |
| R3066 | ERJ3GEYJ220V | 22 1/10W | [M] |
| R3067 | ERJ3GEYJ220V | 22 1/10W | [M] |
| R3068 | ERJ3GEYJ330V | 33 1/10W | [M] |
| R3069 | ERJ3GEYJ220V | 22 1/10W | [M] |
| R3070 | ERJ3GEYJ330V | 33 1/10W | [M] |
| R3071 | ERJ3GEYJ330V | 33 1/10W | [M] |
| R3072 | ERJ3GEYJ330V | 33 1/10W | [M] |
| R3073 | ERJ3GEYJ220V | 22 1/10W | [M] |
| R3074 | ERJ3GEYJ220V | 22 1/10W | [M] |
| R3075 | ERJ3GEYJ220V | 22 1/10W | [M] |
| R3076 | ERJ3GEYJ220V | 22 1/10W | [M] |
| R3077 | ERJ3GEYJ220V | 22 1/10W | [M] |
| R3078 | ERJ3GEYJ220V | 22 1/10W | [M] |
| R3079 | ERJ6GEYJ1R0V | 1.0 1/8W | [M] |
| R3080 | ERJ3GEYJ220V | 22 1/10W | [M] |
| R3081 | ERJ3GEYJ220V | 22 1/10W | [M] |
| R3082 | ERJ3GEYJ220V | 22 1/10W | [M] |
| R3083 | ERJ3GEYJ220V | 22 1/10W | [M] |
| R3084 | ERJ3GEYJ220V | 22 1/10W | [M] |
| R3085 | ERJ3GEYJ220V | 22 1/10W | [M] |
| R3086 | ERJ3GEYJ220V | 22 1/10W | [M] |
| R3087 | ERJ3GEYJ220V | 22 1/10W | [M] |
| R3088 | ERJ3GEYJ220V | 22 1/10W | [M] |
| R3089 | ERJ3GEYJ220V | 22 1/10W | [M] |
| R3090 | ERJ3GEYJ220V | 22 1/10W | [M] |
| R3091 | ERJ3GEYJ221V | 220 1/10W | [M] |
| R3092 | ERJ3GEYJ221V | 220 1/10W | [M] |
| R3093 | ERJ3GEYJ221V | 220 1/10W | [M] |
| R3094 | ERJ3GEYJ221V | 220 1/10W | [M] |
| R3101 | ERJ3GEYJ220V | 22 1/10W | [M] |
| R3102 | ERJ3GEYJ220V | 22 1/10W | [M] |
| R3103 | ERJ3GEYJ220V | 22 1/10W | [M] |
| R3104 | ERJ3GEYJ220V | 22 1/10W | [M] |
| R3105 | ERJ3GEYJ220V | 22 1/10W | [M] |
| R3106 | ERJ3GEYJ220V | 22 1/10W | [M] |
| R3107 | ERJ3GEYJ220V | 22 1/10W | [M] |
| R3108 | ERJ3GEYJ220V | 22 1/10W | [M] |
| R3109 | ERJ3GEYJ220V | 22 1/10W | [M] |
| R3110 | ERJ3GEYJ220V | 22 1/10W | [M] |
| R3111 | ERJ3GEYJ220V | 22 1/10W | [M] |
| R3112 | ERJ3GEYJ220V | 22 1/10W | [M] |
| R3113 | ERJ3GEYJ220V | 22 1/10W | [M] |
| R3114 | ERJ3GEYJ220V | 22 1/10W | [M] |
| R3115 | ERJ3GEYJ220V | 22 1/10W | [M] |
| R3116 | ERJ3GEYJ220V | 22 1/10W | [M] |
| R3117 | ERJ3GEYJ220V | 22 1/10W | [M] |

| Ref. No. | Part No. | Part Name & Description | Remarks |
|---|---|---|---|
| R3118 | ERJ3GEYJ220V | 22 1/10W | [M] |
| R3119 | ERJ3GEYJ220V | 22 1/10W | [M] |
| R3120 | ERJ3GEYJ220V | 22 1/10W | [M] |
| R3121 | ERJ3GEYJ220V | 22 1/10W | [M] |
| R3122 | ERJ3GEYJ220V | 22 1/10W | [M] |
| R3123 | ERJ3GEYJ472V | 4.7K 1/10W | [M] |
| R3124 | ERJ3GEYJ220V | 22 1/10W | [M] |
| R3125 | ERJ3GEYJ220V | 22 1/10W | [M] |
| R3126 | ERJ3GEYJ220V | 22 1/10W | [M] |
| R3127 | ERJ3GEYJ220V | 22 1/10W | [M] |
| R3128 | ERJ3GEYJ220V | 22 1/10W | [M] |
| R3129 | ERJ3GEYJ220V | 22 1/10W | [M] |
| R3130 | ERJ3GEYJ220V | 22 1/10W | [M] |
| R3131 | ERJ3GEYJ220V | 22 1/10W | [M] |
| R3132 | ERJ3GEYJ220V | 22 1/10W | [M] |
| R3133 | ERJ3GEYJ220V | 22 1/10W | [M] |
| R3134 | ERJ3GEYJ220V | 22 1/10W | [M] |
| R3135 | ERJ3GEYJ220V | 22 1/10W | [M] |
| R3136 | ERJ3GEYJ220V | 22 1/10W | [M] |
| R3137 | ERJ3GEYJ220V | 22 1/10W | [M] |
| R3138 | ERJ3GEYJ220V | 22 1/10W | [M] |
| R3139 | ERJ3GEYJ220V | 22 1/10W | [M] |
| R3140 | ERJ3GEYJ220V | 22 1/10W | [M] |
| R3141 | ERJ3GEYJ220V | 22 1/10W | [M] |
| R3142 | ERJ3GEYJ103V | 10K 1/10W | [M] |
| R3143 | ERJ3GEYJ220V | 22 1/10W | [M] |
| R3144 | ERJ3GEYJ103V | 10K 1/10W | [M] |
| R3145 | ERJ3GEYJ220V | 22 1/10W | [M] |
| R3146 | ERJ3GEYJ220V | 22 1/10W | [M] |
| R3147 | ERJ3GEYJ220V | 22 1/10W | [M] |
| R3149 | ERJ3GEYJ103V | 10K 1/10W | [M] |
| R3150 | ERJ3GEYJ220V | 22 1/10W | [M] |
| R3151 | ERJ3GEYJ220V | 22 1/10W | [M] |
| R3152 | ERJ3GEYJ220V | 22 1/10W | [M] |
| R3153 | ERJ3GEYJ220V | 22 1/10W | [M] |
| R3154 | ERJ3GEYJ220V | 22 1/10W | [M] |
| R3155 | ERJ3GEYJ330V | 33 1/10W | [M] |
| R3156 | ERJ3GEYJ330V | 33 1/10W | [M] |
| R3157 | ERJ3GEYJ220V | 22 1/10W | [M] |
| R3158 | ERJ3GEYJ220V | 22 1/10W | [M] |
| R3159 | ERJ3GEYJ220V | 22 1/10W | [M] |
| R3160 | ERJ3GEYJ220V | 22 1/10W | [M] |
| R3162 | ERJ3GEYJ220V | 22 1/10W | [M] |
| R3163 | ERJ3GEYJ330V | 33 1/10W | [M] |
| R3164 | ERJ3GEYJ220V | 22 1/10W | [M] |
| R3165 | ERJ3GEYJ330V | 33 1/10W | [M] |
| R3166 | ERJ3GEYJ330V | 33 1/10W | [M] |
| R3167 | ERJ3GEYJ330V | 33 1/10W | [M] |
| R3168 | ERJ3GEYJ220V | 22 1/10W | [M] |
| R3169 | ERJ3GEYJ220V | 22 1/10W | [M] |
| R3170 | ERJ3GEYJ220V | 22 1/10W | [M] |
| R3171 | ERJ3GEYJ220V | 22 1/10W | [M] |
| R3172 | ERJ3GEYJ220V | 22 1/10W | [M] |
| R3173 | ERJ3GEYJ220V | 22 1/10W | [M] |
| R3174 | ERJ6GEYJ1R0V | 1.0 1/8W | [M] |
| R3175 | ERJ3GEYJ220V | 22 1/10W | [M] |
| R3176 | ERJ3GEYJ220V | 22 1/10W | [M] |
| R3177 | ERJ3GEYJ220V | 22 1/10W | [M] |
| R3178 | ERJ3GEYJ220V | 22 1/10W | [M] |
| R3179 | ERJ3GEYJ220V | 22 1/10W | [M] |
| R3180 | ERJ3GEYJ220V | 22 1/10W | [M] |
| R3181 | ERJ3GEYJ220V | 22 1/10W | [M] |
| R3182 | ERJ3GEYJ220V | 22 1/10W | [M] |
| R3183 | ERJ3GEYJ220V | 22 1/10W | [M] |
| R3184 | ERJ3GEYJ220V | 22 1/10W | [M] |
| R3185 | ERJ3GEYJ221V | 220 1/10W | [M] |
| R3186 | ERJ3GEYJ221V | 220 1/10W | [M] |
| R3187 | ERJ3GEYJ221V | 220 1/10W | [M] |
| R3188 | ERJ3GEYJ221V | 220 1/10W | [M] |
| R3189 | ERJ3GEYJ221V | 220 1/10W | [M] |
| R3190 | ERJ3GEYJ330V | 33 1/10W | [M] |
| R3191 | ERJ3GEYJ330V | 33 1/10W | [M] |
| R3192 | ERJ3GEYJ103V | 10K 1/10W | [M] |

| Ref. No. | Part No. | Part Name & Description | Remarks |
|---|---|---|---|
| R3193 | ERJ3GEYJ103V | 10K 1/10W | [M] |
| R3199 | ERJ3GEYJ103V | 10K 1/10W | [M] |
| R3201 | ERJ3GEYJ101V | 100 1/10W | [M] |
| R3205 | ERJ3GEYJ101V | 100 1/10W | [M] |
| R3209 | ERJ3GEYJ103V | 10K 1/10W | [M] |
| R3213 | ERJ3GEYJ330V | 33 1/10W | [M] |
| R3217 | ERJ6GEYJ100V | 10 1/8W | [M] |
| R3218 | ERJ6GEYJ100V | 10 1/8W | [M] |
| R3357 | ERJ3GEYJ103V | 10K 1/10W | [M] |
| R3358 | ERJ3GEYJ103V | 10K 1/10W | [M] |
| R3401 | ERJ3GEYJ101V | 100 1/10W | [M] |
| R3402 | ERJ3GEYJ105V | 1M 1/10W | [M] |
| R3403 | ERJ3GEYJ105V | 1M 1/10W | [M] |
| R3404 | ERJ3GEYJ821V | 820 1/10W | [M] |
| R3405 | ERJ3GEYJ681V | 680 1/10W | [M] |
| R3406 | ERJ3GEYJ330V | 33 1/10W | [M] |
| R3407 | ERJ3GEYJ330V | 33 1/10W | [M] |
| R3408 | ERJ3GEYJ330V | 33 1/10W | [M] |
| R3409 | ERJ3GEYJ330V | 33 1/10W | [M] |
| R3410 | ERJ3GEYJ183V | 18K 1/10W | [M] |
| R3411 | ERJ3GEYJ471V | 470 1/10W | [M] |
| R3412 | ERJ3GEYJ470V | 47 1/10W | [M] |
| R3413 | ERJ3GEYJ471V | 470 1/10W | [M] |
| R3414 | ERJ3GEYJ471V | 470 1/10W | [M] |
| R3415 | ERJ3GEYJ471V | 470 1/10W | [M] |
| R3416 | ERJ3GEYJ471V | 470 1/10W | [M] |
| R3417 | ERJ3GEYJ330V | 33 1/10W | [M] |
| R3418 | ERJ3GEYJ330V | 33 1/10W | [M] |
| R3419 | ERJ3GEYJ330V | 33 1/10W | [M] |
| R3420 | ERJ3GEYJ330V | 33 1/10W | [M] |
| R3421 | ERJ3GEYJ103V | 10K 1/10W | [M] |
| R3422 | ERJ3GEYJ330V | 33 1/10W | [M] |
| R3423 | ERJ3GEYJ330V | 33 1/10W | [M] |
| R3424 | ERJ3GEYJ330V | 33 1/10W | [M] |
| R3425 | ERJ3GEYJ330V | 33 1/10W | [M] |
| R3426 | ERJ3GEYJ330V | 33 1/10W | [M] |
| R3427 | ERJ3GEYJ330V | 33 1/10W | [M] |
| R3501 | ERJ6GEYJ4R7V | 4.7 1/8W | [M] |
| R3502 | ERJ3GEY0R00V | 0 1/10W | [M] |
| R3503 | ERJ3GEY0R00V | 0 1/10W | [M] |
| R3504 | ERJ3GEY0R00V | 0 1/10W | [M] |
| R3505 | ERJ3GEY0R00V | 0 1/10W | [M] |
| R3506 | ERJ3GEY0R00V | 0 1/10W | [M] |
| R3507 | ERJ6GEYJ100V | 10 1/8W | [M] |
| R3508 | ERJ3GEY0R00V | 0 1/10W | [M] |
| R3509 | ERJ3GEYJ103V | 10K 1/10W | [M] |
| R3510 | ERJ3GEY0R00V | 0 1/10W | [M] |
| R3511 | ERJ3GEYJ103V | 10K 1/10W | [M] |
| R3512 | ERJ3GEY0R00V | 0 1/10W | [M] |
| R3551 | ERJ3GEYJ472V | 4.7K 1/10W | [M] |
| R3552 | ERJ3GEYJ472V | 4.7K 1/10W | [M] |
| R3553 | ERJ3GEYJ472V | 4.7K 1/10W | [M] |
| R3554 | ERJ3GEYJ472V | 4.7K 1/10W | [M] |
| R3555 | ERJ3GEYJ472V | 4.7K 1/10W | [M] |
| R3556 | ERJ3GEYJ330V | 33 1/10W | [M] |
| R3557 | ERJ3GEYJ330V | 33 1/10W | [M] |
| R3558 | ERJ3GEYJ330V | 33 1/10W | [M] |
| R3559 | ERJ3GEYJ330V | 33 1/10W | [M] |
| R3560 | ERJ3GEYJ330V | 33 1/10W | [M] |
| R3561 | ERJ3GEYJ330V | 33 1/10W | [M] |
| R3601 | ERJ3GEYJ102V | 1K 1/10W | [M] |
| R3602 | ERJ3GEYJ223V | 22K 1/10W | [M] |
| R3603 | D1BFR047A010 | 0.047 1/2W | [M] |
| R3604 | ERJ3RBD471V | 470 1/16W | [M] EB/EG |
| R3604 | ERJ3RBD122V | 1.2K 1/16W | [M] EE |
| R3605 | ERJ3RBD272V | 2.7K 1/16W | [M] |
| R3606 | ERJ3RBD562V | 5.6K 1/16W | [M] |
| R3607 | ERJ3GEYJ561V | 560 1/10W | [M] |
| R3608 | ERJ3GEYJ102V | 1K 1/10W | [M] |
| R3701 | ERJ3GEY0R00V | 0 1/10W | [M] |
| R3702 | ERJ3GEYJ221V | 220 1/10W | [M] |
| R3703 | ERJ3GEYJ221V | 220 1/10W | [M] |

| Ref. No. | Part No. | Part Name & Description | Remarks |
|---|---|---|---|
| R3704 | ERJ3GEYJ221V | 220 1/10W | [M] |
| R3705 | ERJ3GEYJ221V | 220 1/10W | [M] |
| R3706 | ERJ3GEYJ221V | 220 1/10W | [M] |
| R3707 | ERJ3GEYJ221V | 220 1/10W | [M] |
| R3708 | ERJ3GEYJ221V | 220 1/10W | [M] |
| R3709 | ERJ3GEYJ221V | 220 1/10W | [M] |
| R3714 | ERJ3GEYJ101V | 100 1/10W | [M] |
| R3715 | ERJ3GEYJ101V | 100 1/10W | [M] |
| R3716 | ERJ3GEYJ101V | 100 1/10W | [M] |
| R3717 | ERJ3GEYJ330V | 33 1/10W | [M] |
| R3718 | ERJ3GEYJ330V | 33 1/10W | [M] |
| R3719 | ERJ3GEYJ330V | 33 1/10W | [M] |
| R3720 | ERJ3GEYJ330V | 33 1/10W | [M] |
| R3721 | ERJ3GEYJ330V | 33 1/10W | [M] |
| R3722 | ERJ3GEYJ330V | 33 1/10W | [M] |
| R3723 | ERJ3GEYJ330V | 33 1/10W | [M] |
| R3724 | ERJ3GEYJ330V | 33 1/10W | [M] |
| R3731 | ERJ3GEYJ221V | 220 1/10W | [M] |
| R3732 | ERJ3GEYJ220V | 22 1/10W | [M] |
| R3733 | ERJ3GEYJ220V | 22 1/10W | [M] |
| R3734 | ERJ3GEYJ220V | 22 1/10W | [M] |
| R3735 | ERJ3GEYJ220V | 22 1/10W | [M] |
| R3736 | ERJ3GEYJ221V | 220 1/10W | [M] |
| R3737 | ERJ3GEYJ221V | 220 1/10W | [M] |
| R3738 | ERJ3GEYJ221V | 220 1/10W | [M] |
| R3739 | ERJ3GEYJ221V | 220 1/10W | [M] |
| R3740 | ERJ3GEYJ221V | 220 1/10W | [M] |
| R3741 | ERJ3GEYJ221V | 220 1/10W | [M] |
| R3742 | ERJ3GEYJ221V | 220 1/10W | [M] |
| R3743 | ERJ3GEYJ221V | 220 1/10W | [M] |
| R3744 | ERJ3GEYJ221V | 220 1/10W | [M] |
| R3745 | ERJ3GEYJ221V | 220 1/10W | [M] |
| R3746 | ERJ3GEYJ221V | 220 1/10W | [M] |
| R3747 | ERJ3GEYJ221V | 220 1/10W | [M] |
| R3748 | ERJ3GEYJ221V | 220 1/10W | [M] |
| R3749 | ERJ3GEYJ221V | 220 1/10W | [M] |
| R3750 | ERJ3GEYJ221V | 220 1/10W | [M] |
| R3751 | ERJ3GEYJ221V | 220 1/10W | [M] |
| R3752 | ERJ3GEYJ221V | 220 1/10W | [M] |
| R3753 | ERJ3GEYJ221V | 220 1/10W | [M] |
| R3754 | ERJ3GEYJ221V | 220 1/10W | [M] |
| R3755 | ERJ3GEYJ221V | 220 1/10W | [M] |
| R3902 | ERJ3GEY0R00V | 0 1/10W | [M] |
| R4001 | ERJ3GEYJ102V | 1K 1/10W | [M] |
| R4002 | ERJ3GEYJ102V | 1K 1/10W | [M] |
| R4003 | ERJ3GEYJ102V | 1K 1/10W | [M] |
| R4004 | ERJ3GEYJ102V | 1K 1/10W | [M] |
| R4005 | ERJ3GEYJ102V | 1K 1/10W | [M] |
| R4006 | ERJ3GEYJ102V | 1K 1/10W | [M] |
| R4007 | ERJ3GEYJ102V | 1K 1/10W | [M] |
| R4008 | ERJ3GEYJ102V | 1K 1/10W | [M] |
| R4009 | ERJ3GEYJ102V | 1K 1/10W | [M] |
| R4010 | ERJ3GEYJ102V | 1K 1/10W | [M] |
| R4011 | ERJ3GEYJ102V | 1K 1/10W | [M] |
| R4012 | ERJ3GEYJ102V | 1K 1/10W | [M] |
| R4013 | ERJ3GEYJ102V | 1K 1/10W | [M] |
| R4014 | ERJ3GEYJ102V | 1K 1/10W | [M] |
| R4015 | ERJ3GEYJ102V | 1K 1/10W | [M] |
| R4016 | ERJ3GEYJ102V | 1K 1/10W | [M] |
| R4017 | ERJ3GEYJ102V | 1K 1/10W | [M] |
| R4018 | ERJ3GEYJ102V | 1K 1/10W | [M] |
| R4019 | ERJ3GEYJ102V | 1K 1/10W | [M] |
| R4020 | ERJ3GEYJ102V | 1K 1/10W | [M] |
| R4021 | ERJ3GEYJ102V | 1K 1/10W | [M] |
| R4022 | ERJ3GEYJ102V | 1K 1/10W | [M] |
| R4045 | ERJ3GEYJ102V | 1K 1/10W | [M] |
| R4047 | ERJ3GEYJ102V | 1K 1/10W | [M] |
| R4048 | ERJ3GEYJ102V | 1K 1/10W | [M] |
| R4049 | ERJ3GEYJ102V | 1K 1/10W | [M] |
| R4050 | ERJ3GEYJ102V | 1K 1/10W | [M] |
| R4051 | ERJ3GEYJ473V | 47K 1/10W | [M] |
| R4052 | ERJ3GEYJ473V | 47K 1/10W | [M] |
| R4053 | ERJ3GEYJ473V | 47K 1/10W | [M] |

| Ref. No. | Part No. | Part Name & Description | Remarks |
|---|---|---|---|
| R4054 | ERJ3GEYJ473V | 47K 1/10W | [M] |
| R4055 | ERJ3GEYJ473V | 47K 1/10W | [M] |
| R4056 | ERJ3GEYJ473V | 47K 1/10W | [M] |
| R4057 | ERJ3GEYJ473V | 47K 1/10W | [M] |
| R4058 | ERJ3GEYJ473V | 47K 1/10W | [M] |
| R4059 | ERJ3GEYJ473V | 47K 1/10W | [M] |
| R4060 | ERJ3GEYJ473V | 47K 1/10W | [M] |
| R4061 | ERJ3GEYJ473V | 47K 1/10W | [M] |
| R4062 | ERJ3GEYJ473V | 47K 1/10W | [M] |
| R4063 | ERJ3GEYJ473V | 47K 1/10W | [M] |
| R4064 | ERJ3GEYJ473V | 47K 1/10W | [M] |
| R4065 | ERJ3GEYJ473V | 47K 1/10W | [M] |
| R4066 | ERJ3GEYJ473V | 47K 1/10W | [M] |
| R4067 | ERJ3GEYJ473V | 47K 1/10W | [M] |
| R4068 | ERJ3GEYJ473V | 47K 1/10W | [M] |
| R4069 | ERJ3GEYJ473V | 47K 1/10W | [M] |
| R4070 | ERJ3GEYJ473V | 47K 1/10W | [M] |
| R4071 | ERJ3GEYJ473V | 47K 1/10W | [M] |
| R4072 | ERJ3GEYJ473V | 47K 1/10W | [M] |
| R4073 | ERJ3GEYJ473V | 47K 1/10W | [M] |
| R4074 | ERJ3GEYJ473V | 47K 1/10W | [M] |
| R4075 | ERJ3GEYJ473V | 47K 1/10W | [M] |
| R4076 | ERJ3GEYJ473V | 47K 1/10W | [M] |
| R4077 | ERJ3GEYJ473V | 47K 1/10W | [M] |
| R4078 | ERJ3GEYJ473V | 47K 1/10W | [M] |
| R4079 | ERJ3GEYJ473V | 47K 1/10W | [M] |
| R4080 | ERJ3GEYJ473V | 47K 1/10W | [M] |
| R4081 | ERJ3GEYJ473V | 47K 1/10W | [M] |
| R4082 | ERJ3GEYJ473V | 47K 1/10W | [M] |
| R4083 | ERJ3GEYJ473V | 47K 1/10W | [M] |
| R4084 | ERJ3GEYJ473V | 47K 1/10W | [M] |
| R4085 | ERJ3GEYJ473V | 47K 1/10W | [M] |
| R4086 | ERJ3GEYJ473V | 47K 1/10W | [M] |
| R4087 | ERJ3GEYJ473V | 47K 1/10W | [M] |
| R4088 | ERJ3GEYJ473V | 47K 1/10W | [M] |
| R4089 | ERJ3GEYJ473V | 47K 1/10W | [M] |
| R4101 | ERJ3GEYJ102V | 1K 1/10W | [M] |
| R4102 | ERJ3GEYJ102V | 1K 1/10W | [M] |
| R4103 | ERJ3GEYJ473V | 47K 1/10W | [M] |
| R4104 | ERJ3GEYJ473V | 47K 1/10W | [M] |
| R4105 | ERJ3GEYJ472V | 4.7K 1/10W | [M] |
| R4106 | ERJ3GEYJ472V | 4.7K 1/10W | [M] |
| R4107 | ERJ3GEYJ472V | 4.7K 1/10W | [M] |
| R4108 | ERJ3GEYJ472V | 4.7K 1/10W | [M] |
| R4109 | ERJ3GEYJ102V | 1K 1/10W | [M] |
| R4110 | ERJ3GEYJ102V | 1K 1/10W | [M] |
| R4111 | ERJ3GEYJ102V | 1K 1/10W | [M] |
| R4112 | ERJ3GEYJ102V | 1K 1/10W | [M] |
| R4113 | ERJ3GEYJ473V | 47K 1/10W | [M] |
| R4114 | ERJ3GEYJ473V | 47K 1/10W | [M] |
| R4115 | ERJ3GEYJ472V | 4.7K 1/10W | [M] |
| R4116 | ERJ3GEYJ472V | 4.7K 1/10W | [M] |
| R4117 | ERJ3GEYJ472V | 4.7K 1/10W | [M] |
| R4118 | ERJ3GEYJ472V | 4.7K 1/10W | [M] |
| R4119 | ERJ3GEYJ102V | 1K 1/10W | [M] |
| R4120 | ERJ3GEYJ102V | 1K 1/10W | [M] |
| R4121 | ERJ3GEYJ102V | 1K 1/10W | [M] |
| R4122 | ERJ3GEYJ102V | 1K 1/10W | [M] |
| R4123 | ERJ3GEYJ473V | 47K 1/10W | [M] |
| R4124 | ERJ3GEYJ473V | 47K 1/10W | [M] |
| R4125 | ERJ3GEYJ472V | 4.7K 1/10W | [M] |
| R4126 | ERJ3GEYJ472V | 4.7K 1/10W | [M] |
| R4127 | ERJ3GEYJ472V | 4.7K 1/10W | [M] |
| R4128 | ERJ3GEYJ472V | 4.7K 1/10W | [M] |
| R4129 | ERJ3GEYJ102V | 1K 1/10W | [M] |
| R4130 | ERJ3GEYJ102V | 1K 1/10W | [M] |
| R4131 | ERJ3GEYJ102V | 1K 1/10W | [M] |
| R4132 | ERJ3GEYJ102V | 1K 1/10W | [M] |
| R4133 | ERJ3GEYJ473V | 47K 1/10W | [M] |
| R4134 | ERJ3GEYJ473V | 47K 1/10W | [M] |
| R4135 | ERJ3GEYJ472V | 4.7K 1/10W | [M] |
| R4136 | ERJ3GEYJ472V | 4.7K 1/10W | [M] |
| R4137 | ERJ3GEYJ472V | 4.7K 1/10W | [M] |

| Ref. No. | Part No. | Part Name & Description | Remarks |
|---|---|---|---|
| R4138 | ERJ3GEYJ472V | 4.7K 1/10W | [M] |
| R4139 | ERJ3GEYJ102V | 1K 1/10W | [M] |
| R4140 | ERJ3GEYJ102V | 1K 1/10W | [M] |
| R4151 | ERJ3GEYJ473V | 47K 1/10W | [M] |
| R4152 | ERJ3GEYJ473V | 47K 1/10W | [M] |
| R4153 | ERJ3GEYJ473V | 47K 1/10W | [M] |
| R4154 | ERJ3GEYJ473V | 47K 1/10W | [M] |
| R4155 | ERJ3GEYJ473V | 47K 1/10W | [M] |
| R4156 | ERJ3GEYJ473V | 47K 1/10W | [M] |
| R4157 | ERJ3GEYJ473V | 47K 1/10W | [M] |
| R4158 | ERJ3GEYJ473V | 47K 1/10W | [M] |
| R4161 | ERJ3GEYJ102V | 1K 1/10W | [M] |
| R4162 | ERJ3GEYJ102V | 1K 1/10W | [M] |
| R4163 | ERJ3GEYJ152V | 1.5K 1/10W | [M] |
| R4164 | ERJ3GEYJ152V | 1.5K 1/10W | [M] |
| R4165 | ERJ3GEYJ472V | 4.7K 1/10W | [M] |
| R4166 | ERJ3GEYJ472V | 4.7K 1/10W | [M] |
| R4167 | ERJ3GEYJ122V | 1.2K 1/10W | [M] |
| R4168 | ERJ3GEYJ122V | 1.2K 1/10W | [M] |
| R4169 | ERJ3GEYJ392V | 3.9K 1/10W | [M] |
| R4170 | ERJ3GEYJ392V | 3.9K 1/10W | [M] |
| R4171 | ERJ3GEYJ102V | 1K 1/10W | [M] |
| R4172 | ERJ3GEYJ102V | 1K 1/10W | [M] |
| R4173 | ERJ3GEYJ102V | 1K 1/10W | [M] |
| R4174 | ERJ3GEYJ102V | 1K 1/10W | [M] |
| R4175 | ERJ3GEYJ152V | 1.5K 1/10W | [M] |
| R4176 | ERJ3GEYJ152V | 1.5K 1/10W | [M] |
| R4177 | ERJ3GEYJ472V | 4.7K 1/10W | [M] |
| R4178 | ERJ3GEYJ472V | 4.7K 1/10W | [M] |
| R4179 | ERJ3GEYJ122V | 1.2K 1/10W | [M] |
| R4180 | ERJ3GEYJ122V | 1.2K 1/10W | [M] |
| R4181 | ERJ3GEYJ392V | 3.9K 1/10W | [M] |
| R4182 | ERJ3GEYJ392V | 3.9K 1/10W | [M] |
| R4183 | ERJ3GEYJ102V | 1K 1/10W | [M] |
| R4184 | ERJ3GEYJ102V | 1K 1/10W | [M] |
| R4188 | ERJ3GEYJ102V | 1K 1/10W | [M] |
| R4189 | ERJ3GEYJ102V | 1K 1/10W | [M] |
| R4190 | ERJ3GEYJ102V | 1K 1/10W | [M] |
| R4191 | ERJ3GEYJ152V | 1.5K 1/10W | [M] |
| R4192 | ERJ3GEYJ821V | 820 1/10W | [M] |
| R4193 | ERJ3GEYJ472V | 4.7K 1/10W | [M] |
| R4194 | ERJ3GEYJ472V | 4.7K 1/10W | [M] |
| R4195 | ERJ3GEYJ122V | 1.2K 1/10W | [M] |
| R4196 | ERJ3GEYJ473V | 47K 1/10W | [M] |
| R4197 | ERJ3GEYJ392V | 3.9K 1/10W | [M] |
| R4198 | ERJ3GEYJ102V | 1K 1/10W | [M] |
| R4199 | ERJ3GEYJ102V | 1K 1/10W | [M] |
| R4201 | ERJ3GEYJ102V | 1K 1/10W | [M] |
| R4202 | ERJ3GEYJ102V | 1K 1/10W | [M] |
| R4203 | ERJ3GEYJ152V | 1.5K 1/10W | [M] |
| R4204 | ERJ3GEYJ152V | 1.5K 1/10W | [M] |
| R4205 | ERJ3GEYJ472V | 4.7K 1/10W | [M] |
| R4206 | ERJ3GEYJ472V | 4.7K 1/10W | [M] |
| R4207 | ERJ3GEYJ122V | 1.2K 1/10W | [M] |
| R4208 | ERJ3GEYJ122V | 1.2K 1/10W | [M] |
| R4209 | ERJ3GEYJ392V | 3.9K 1/10W | [M] |
| R4210 | ERJ3GEYJ392V | 3.9K 1/10W | [M] |
| R4211 | ERJ3GEYJ102V | 1K 1/10W | [M] |
| R4212 | ERJ3GEYJ102V | 1K 1/10W | [M] |
| R4213 | ERJ3GEYJ474V | 470K 1/10W | [M] |
| R4214 | ERJ3GEYJ472V | 4.7K 1/10W | [M] |
| R4215 | ERJ3GEYJ474V | 470K 1/10W | [M] |
| R4216 | ERJ3GEYJ472V | 4.7K 1/10W | [M] |
| R4218 | ERJ3GEYJ474V | 470K 1/10W | [M] |
| R4219 | ERJ3GEYJ472V | 4.7K 1/10W | [M] |
| R4220 | ERJ3GEYJ102V | 1K 1/10W | [M] |
| R4221 | ERJ3GEYJ102V | 1K 1/10W | [M] |
| R4222 | ERJ3GEYJ472V | 4.7K 1/10W | [M] |
| R4223 | ERJ3GEYJ474V | 470K 1/10W | [M] |
| R4224 | ERJ3GEYJ222V | 2.2K 1/10W | [M] |
| R4233 | ERJ3GEY0R00V | 0 1/10W | [M] |
| R4234 | ERJ3GEY0R00V | 0 1/10W | [M] |
| R4235 | ERJ3GEY0R00V | 0 1/10W | [M] |

| Ref. No. | Part No. | Part Name & Description | Remarks |
|---|---|---|---|
| R4236 | ERJ3GEY0R00V | 0 1/10W | [M] |
| R4241 | ERJ3GEY0R00V | 0 1/10W | [M] |
| R4242 | ERJ3GEY0R00V | 0 1/10W | [M] |
| R4247 | ERJ3GEYJ102V | 1K 1/10W | [M] |
| R4248 | ERJ3GEYJ102V | 1K 1/10W | [M] |
| R4250 | ERJ3GEYJ562V | 5.6K 1/10W | [M] |
| R4251 | ERJ3GEYJ103V | 10K 1/10W | [M] |
| R4252 | ERJ3GEYJ102V | 1K 1/10W | [M] |
| R4253 | ERJ3GEYJ392V | 3.9K 1/10W | [M] |
| R4254 | ERJ3GEYJ103V | 10K 1/10W | [M] |
| R4256 | ERJ3GEYJ103V | 10K 1/10W | [M] |
| R4257 | ERJ3GEYJ331V | 330 1/10W | [M] |
| R4261 | ERJ3GEYJ101V | 100 1/10W | [M] |
| R4262 | ERJ3GEYJ101V | 100 1/10W | [M] |
| R4263 | ERJ3GEYJ103V | 10K 1/10W | [M] |
| R4264 | ERJ3GEYJ103V | 10K 1/10W | [M] |
| R4265 | ERJ3GEYJ103V | 10K 1/10W | [M] |
| R4266 | ERJ3GEYJ103V | 10K 1/10W | [M] |
| R4271 | ERJ3GEY0R00V | 0 1/10W | [M] |
| R4272 | ERJ3GEY0R00V | 0 1/10W | [M] |
| R4273 | ERJ3GEY0R00V | 0 1/10W | [M] |
| R4274 | ERJ3GEY0R00V | 0 1/10W | [M] |
| R4275 | ERJ3GEY0R00V | 0 1/10W | [M] |
| R4276 | ERJ3GEY0R00V | 0 1/10W | [M] |
| R4301 | ERJ3GEYJ102V | 1K 1/10W | [M] |
| R4302 | ERJ3GEYJ102V | 1K 1/10W | [M] |
| R4303 | ERJ3GEYJ104V | 100K 1/10W | [M] |
| R4304 | ERJ3GEYJ104V | 100K 1/10W | [M] |
| R4305 | ERJ3GEYJ122V | 1.2K 1/10W | [M] |
| R4306 | ERJ3GEYJ122V | 1.2K 1/10W | [M] |
| R4307 | ERJ3GEYJ103V | 10K 1/10W | [M] |
| R4308 | ERJ3GEYJ103V | 10K 1/10W | [M] |
| R4309 | ERJ3GEYJ473V | 47K 1/10W | [M] |
| R4310 | ERJ3GEYJ473V | 47K 1/10W | [M] |
| R4311 | ERJ3GEYJ390V | 39 1/10W | [M] |
| R4312 | ERJ3GEYJ390V | 39 1/10W | [M] |
| R4313 | ERJ3GEYJ390V | 39 1/10W | [M] |
| R4314 | ERJ3GEYJ390V | 39 1/10W | [M] |
| R4315 | ERJ3GEYJ390V | 39 1/10W | [M] |
| R4316 | ERJ3GEYJ390V | 39 1/10W | [M] |
| R4317 | ERJ3GEYJ390V | 39 1/10W | [M] |
| R4318 | ERJ3GEYJ390V | 39 1/10W | [M] |
| R4319 | ERJ3GEYJ390V | 39 1/10W | [M] |
| R4320 | ERJ3GEYJ390V | 39 1/10W | [M] |
| R4321 | ERJ3GEYJ390V | 39 1/10W | [M] |
| R4322 | ERJ3GEYJ390V | 39 1/10W | [M] |
| R4323 | ERJ3GEYJ102V | 1K 1/10W | [M] |
| R4324 | ERJ3GEYJ102V | 1K 1/10W | [M] |
| R4325 | ERJ3GEYJ102V | 1K 1/10W | [M] |
| R4326 | ERJ3GEYJ102V | 1K 1/10W | [M] |
| R4331 | ERJ3GEYJ102V | 1K 1/10W | [M] |
| R4332 | ERJ3GEYJ102V | 1K 1/10W | [M] |
| R4333 | ERJ3GEYJ104V | 100K 1/10W | [M] |
| R4334 | ERJ3GEYJ104V | 100K 1/10W | [M] |
| R4335 | ERJ3GEYJ103V | 10K 1/10W | [M] |
| R4336 | ERJ3GEYJ103V | 10K 1/10W | [M] |
| R4337 | ERJ3GEYJ103V | 10K 1/10W | [M] |
| R4338 | ERJ3GEYJ103V | 10K 1/10W | [M] |
| R4339 | ERJ3GEYJ473V | 47K 1/10W | [M] |
| R4340 | ERJ3GEYJ473V | 47K 1/10W | [M] |
| R4341 | ERJ3GEYJ222V | 2.2K 1/10W | [M] |
| R4342 | ERJ3GEYJ222V | 2.2K 1/10W | [M] |
| R4343 | ERJ3GEYJ102V | 1K 1/10W | [M] |
| R4344 | ERJ3GEYJ102V | 1K 1/10W | [M] |
| R4345 | ERJ3GEYJ222V | 2.2K 1/10W | [M] |
| R4346 | ERJ3GEYJ474V | 470K 1/10W | [M] |
| R4347 | ERJ3GEYJ471V | 470 1/10W | [M] |
| R4348 | ERJ3GEYJ474V | 470K 1/10W | [M] |
| R4351 | ERJ3GEYJ102V | 1K 1/10W | [M] |
| R4352 | ERJ3GEYJ102V | 1K 1/10W | [M] |
| R4353 | ERJ3GEYJ104V | 100K 1/10W | [M] |
| R4354 | ERJ3GEYJ104V | 100K 1/10W | [M] |
| R4355 | ERJ3GEYJ103V | 10K 1/10W | [M] |

| Ref. No. | Part No. | Part Name & Description | Remarks |
|---|---|---|---|
| R4356 | ERJ3GEYJ103V | 10K 1/10W | [M] |
| R4357 | ERJ3GEYJ103V | 10K 1/10W | [M] |
| R4358 | ERJ3GEYJ103V | 10K 1/10W | [M] |
| R4359 | ERJ3GEYJ473V | 47K 1/10W | [M] |
| R4360 | ERJ3GEYJ473V | 47K 1/10W | [M] |
| R4361 | ERJ3GEYJ222V | 2.2K 1/10W | [M] |
| R4362 | ERJ3GEYJ222V | 2.2K 1/10W | [M] |
| R4363 | ERJ3GEYJ102V | 1K 1/10W | [M] |
| R4364 | ERJ3GEYJ102V | 1K 1/10W | [M] |
| R4371 | ERJ3GEYJ223V | 22K 1/10W | [M] |
| R4372 | ERJ3GEYJ223V | 22K 1/10W | [M] |
| R4373 | ERJ3GEYJ824V | 820K 1/10W | [M] |
| R4374 | ERJ3GEYJ824V | 820K 1/10W | [M] |
| R4375 | ERJ3GEYJ473V | 47K 1/10W | [M] |
| R4376 | ERJ3GEYJ103V | 10K 1/10W | [M] |
| R4377 | ERJ3GEYJ104V | 100K 1/10W | [M] |
| R4378 | ERJ3GEYJ682V | 6.8K 1/10W | [M] |
| R4379 | ERJ3GEYJ102V | 1K 1/10W | [M] |
| R4380 | ERJ3GEYJ102V | 1K 1/10W | [M] |
| R4381 | ERJ3GEYJ102V | 1K 1/10W | [M] |
| R4382 | ERJ3GEYJ102V | 1K 1/10W | [M] |
| R4383 | ERJ3GEYJ473V | 47K 1/10W | [M] |
| R4391 | ERJ3GEYJ470V | 47 1/10W | [M] |
| R4392 | ERJ3GEYJ470V | 47 1/10W | [M] |
| R4393 | ERJ3GEYJ153V | 15K 1/10W | [M] |
| R4394 | ERJ3GEYJ153V | 15K 1/10W | [M] |
| R4401 | ERJ3GEYJ470V | 47 1/10W | [M] |
| R4401 | ERJ3GEYJ473V | 47K 1/10W | [M] |
| R4402 | ERJ3GEYJ470V | 47 1/10W | [M] |
| R4403 | ERJ3GEYJ750V | 75 1/10W | [M] |
| R4404 | ERJ3GEYJ100V | 10 1/10W | [M] |
| R4405 | ERJ3GEYJ470V | 47 1/10W | [M] |
| R4406 | ERJ3GEYJ103V | 10K 1/10W | [M] |
| R4407 | ERJ3GEYJ103V | 10K 1/10W | [M] |
| R4408 | ERJ3GEYJ750V | 75 1/10W | [M] |
| R4427 | ERJ3GEYJ102V | 1K 1/10W | [M] |
| R4428 | ERJ3GEYJ102V | 1K 1/10W | [M] |
| R4429 | ERJ3GEYJ104V | 100K 1/10W | [M] |
| R4430 | ERJ3GEYJ104V | 100K 1/10W | [M] |
| R4431 | ERJ3GEYJ102V | 1K 1/10W | [M] |
| R4432 | ERJ3GEYJ102V | 1K 1/10W | [M] |
| R4433 | ERJ3GEYJ104V | 100K 1/10W | [M] |
| R4434 | ERJ3GEYJ104V | 100K 1/10W | [M] |
| R4435 | ERJ3GEYJ103V | 10K 1/10W | [M] |
| R4436 | ERJ3GEYJ103V | 10K 1/10W | [M] |
| R4437 | ERJ3GEYJ103V | 10K 1/10W | [M] |
| R4438 | ERJ3GEYJ103V | 10K 1/10W | [M] |
| R4439 | ERJ3GEYJ473V | 47K 1/10W | [M] |
| R4440 | ERJ3GEYJ473V | 47K 1/10W | [M] |
| R4441 | ERJ3GEYJ222V | 2.2K 1/10W | [M] |
| R4442 | ERJ3GEYJ222V | 2.2K 1/10W | [M] |
| R4443 | ERJ3GEYJ102V | 1K 1/10W | [M] |
| R4444 | ERJ3GEYJ102V | 1K 1/10W | [M] |
| R4601 | ERJ3GEYJ332V | 3.3K 1/10W | [M] |
| R4602 | ERJ3GEYJ332V | 3.3K 1/10W | [M] |
| R4603 | ERJ3GEYJ332V | 3.3K 1/10W | [M] |
| R4604 | ERJ3GEYJ332V | 3.3K 1/10W | [M] |
| R5000 | ERJ3GEYJ562V | 5.6K 1/10W | [M] |
| R5001 | ERJ3GEYJ562V | 5.6K 1/10W | [M] |
| R5002 | ERJ3GEYJ562V | 5.6K 1/10W | [M] |
| R5003 | ERJ3GEYJ562V | 5.6K 1/10W | [M] |
| R5004 | D0GF100JA014 | 10 1/8W | [M] |
| R5005 | D0GF100JA014 | 10 1/8W | [M] |
| R5006 | D0GZ220JA012 | 22 1W | [M] |
| R5007 | D0GZ220JA012 | 22 1W | [M] |
| R5008 | ERJ3GEYJ101V | 100 1/10W | [M] |
| R5010 | D0GF100JA014 | 10 1/8W | [M] |
| R5011 | D0GF100JA014 | 10 1/8W | [M] |
| R5018 | ERJ3GEYJ683V | 68K 1/10W | [M] |
| R5019 | ERJ3GEYJ683V | 68K 1/10W | [M] |
| R5020 | ERJ3GEYJ124V | 120K 1/10W | [M] |
| R5021 | ERJ3GEYJ122V | 1.2K 1/10W | [M] |
| R5022 | ERJ3GEYJ122V | 1.2K 1/10W | [M] |

| Ref. No. | Part No. | Part Name & Description | Remarks |
|---|---|---|---|
| R5023 | ERJ3GEYJ122V | 1.2K 1/10W | [M] |
| R5030 | ERJ3GEYJ562V | 5.6K 1/10W | [M] |
| R5031 | ERJ3GEYJ562V | 5.6K 1/10W | [M] |
| R5032 | ERJ3GEYJ562V | 5.6K 1/10W | [M] |
| R5033 | ERJ3GEYJ562V | 5.6K 1/10W | [M] |
| R5034 | ERJ3GEYJ562V | 5.6K 1/10W | [M] |
| R5035 | ERJ3GEYJ562V | 5.6K 1/10W | [M] |
| R5036 | ERJ3GEYJ562V | 5.6K 1/10W | [M] |
| R5037 | ERJ3GEYJ562V | 5.6K 1/10W | [M] |
| R5100 | ERJ3RED334V | 330K 1/16W | [M] |
| R5101 | ERJ3RED224V | 220K 1/16W | [M] |
| R5103 | ERJ3GEYJ562V | 5.6K 1/10W | [M] |
| R5104 | ERJ3GEYJ562V | 5.6K 1/10W | [M] |
| R5110 | ERJ3GEYJ223V | 22K 1/10W | [M] |
| R5113 | ERJ3GEYJ124V | 120K 1/10W | [M] |
| R5118 | ERJ3GEYJ562V | 5.6K 1/10W | [M] |
| R5119 | ERJ3GEYJ562V | 5.6K 1/10W | [M] |
| R5200 | D0GF100JA014 | 10 1/8W | [M] |
| R5201 | D0GF100JA014 | 10 1/8W | [M] |
| R5204 | ERJ3GEYJ101V | 100 1/10W | [M] |
| R5205 | ERJ3GEYJ562V | 5.6K 1/10W | [M] |
| R5206 | ERJ3GEYJ562V | 5.6K 1/10W | [M] |
| R5207 | ERJ3GEYJ562V | 5.6K 1/10W | [M] |
| R5208 | ERJ3GEYJ562V | 5.6K 1/10W | [M] |
| R5209 | D0GZ220JA012 | 22 1W | [M] |
| R5210 | D0GF100JA014 | 10 1/8W | [M] |
| R5211 | D0GF100JA014 | 10 1/8W | [M] |
| R5217 | D0GZ220JA012 | 22 1W | [M] |
| R5218 | ERJ3GEYJ683V | 68K 1/10W | [M] |
| R5228 | ERJ3GEYJ124V | 120K 1/10W | [M] |
| R5300 | D0GZ220JA012 | 22 1W | [M] |
| R5302 | ERJ8GEYJ100V | 10 1/4W | [M] |
| R5304 | ERJ3GEYJ101V | 100 1/10W | [M] |
| R5305 | ERJ8GEYJ100V | 10 1/4W | [M] |
| R5306 | ERJ3GEYJ562V | 5.6K 1/10W | [M] |
| R5307 | ERJ3GEYJ562V | 5.6K 1/10W | [M] |
| R5308 | ERJ3GEYJ562V | 5.6K 1/10W | [M] |
| R5309 | ERJ3GEYJ562V | 5.6K 1/10W | [M] |
| R5310 | ERJ8GEYJ100V | 10 1/4W | [M] |
| R5311 | ERJ8GEYJ100V | 10 1/4W | [M] |
| R5317 | ERJ3GEYJ122V | 1.2K 1/10W | [M] |
| R5318 | ERJ3GEYJ124V | 120K 1/10W | [M] |
| R5319 | D0GZ220JA012 | 22 1W | [M] |
| R5327 | ERJ3GEYJ122V | 1.2K 1/10W | [M] |
| R5328 | ERJ3GEYJ683V | 68K 1/10W | [M] |
| R5400 | D0GZ220JA012 | 22 1W | [M] |
| R5402 | D0GF100JA014 | 10 1/8W | [M] |
| R5404 | ERJ3GEYJ101V | 100 1/10W | [M] |
| R5405 | D0GF100JA014 | 10 1/8W | [M] |
| R5410 | D0GF100JA014 | 10 1/8W | [M] |
| R5411 | D0GF100JA014 | 10 1/8W | [M] |
| R5419 | D0GZ220JA012 | 22 1W | [M] |
| R5504 | ERJ3GEYJ220V | 22 1/10W | [M] |
| R5505 | ERJ3GEYJ101V | 100 1/10W | [M] |
| R5506 | ERJ3GEYJ105V | 1M 1/10W | [M] |
| R5507 | ERJ3GEYJ105V | 1M 1/10W | [M] |
| R5508 | ERJ3GEYJ105V | 1M 1/10W | [M] |
| R5510 | ERG2SJ471E | 470 2W | [M] |
| R5602 | ERJ3GEYJ103V | 10K 1/10W | [M] |
| R5603 | ERJ3GEYJ103V | 10K 1/10W | [M] |
| R5604 | ERJ3GEYJ472V | 4.7K 1/10W | [M] |
| R5606 | ERJ3GEYJ103V | 10K 1/10W | [M] |
| R5607 | ERJ3GEYJ472V | 4.7K 1/10W | [M] |
| R5608 | ERJ3GEYJ103V | 10K 1/10W | [M] |
| R5609 | ERJ3GEYJ103V | 10K 1/10W | [M] |
| R5610 | ERJ3GEYJ472V | 4.7K 1/10W | [M] |
| R5611 | ERJ3GEYJ472V | 4.7K 1/10W | [M] |
| R5636 | ERDS1FVJ102T | 1K 1/2W | [M] |
| R5637 | ERJ3GEYJ102V | 1K 1/10W | [M] |
| R5639 | ERJ3GEYJ182V | 1.8K 1/10W | [M] |
| R5640 | ERJ3GEY0R00V | 0 1/10W | [M] |
| R5654 | ERJ3GEYJ563V | 56K 1/10W | [M] |
| R5655 | ERJ3GEYJ103V | 10K 1/10W | [M] |

| Ref. No. | Part No. | Part Name & Description | Remarks |
|---|---|---|---|
| R5656 | ERJ3GEYJ103V | 10K 1/10W | [M] |
| R5657 | ERJ3GEYJ103V | 10K 1/10W | [M] |
| R5658 | ERJ3GEYJ185V | 1.8M 1/10W | [M] |
| R5659 | ERJ3GEYJ104V | 100K 1/10W | [M] |
| R5660 | ERJ3GEYJ103V | 10K 1/10W | [M] |
| R5670 | ERJ3GEY0R00V | 0 1/10W | [M] |
| R5701 | ERDS1TJ395B | 3.95M 1/2W | [M] |
| R5702 | ERJ1TYJ104U | 100K 1W | [M] |
| R5703 | ERJ1TYJ104U | 100K 1W | [M] |
| R5704 | ERJ8GEYJ394V | 390K 1/4W | [M] |
| R5705 | ERJ8GEYJ394V | 390K 1/4W | [M] |
| R5720 | ERJ6GEYJ220V | 22 1/8W | [M] |
| R5721 | ERJ6GEYJ103V | 10K 1/8W | [M] |
| R5722 | ERJ6GEYJ122V | 1.2K 1/8W | [M] |
| R5723 | ERJ3GEYJ102V | 1K 1/10W | [M] |
| R5724 | ERJ6GEYJ121V | 120 1/8W | [M] |
| R5725 | ERJ3GEY0R00V | 0 1/10W | [M] |
| R5726 | ERX2SZJR10P | 0.1 2W | [M] |
| R5728 | ERJ3GEYJ104V | 100K 1/10W | [M] |
| R5729 | ERJ6GEYJ103V | 10K 1/8W | [M] |
| R5730 | ERJ3GEYJ102V | 1K 1/10W | [M] |
| R5731 | ERJ3GEY0R00V | 0 1/10W | [M] |
| R5732 | ERJ3GEYJ101V | 100 1/10W | [M] |
| R5733 | ERJ3GEYJ473V | 47K 1/10W | [M] |
| R5750 | ERJ3GEY0R00V | 0 1/10W | [M] |
| R5786 | ERJ1TYJ204U | 200K 1W | [M] |
| R5787 | ERJ3GEYJ753V | 75K 1/10W | [M] |
| R5795 | ERJ6GEYJ433V | 43K 1/8W | [M] |
| R5796 | ERDS1FVJ222T | 2.2K 1/2W | [M] |
| R5797 | ERJ6GEYJ472V | 4.7K 1/8W | [M] |
| R5798 | ERJ6GEYJ100V | 10 1/8W | [M] |
| R5800 | ERJ6GEYJ123V | 12K 1/8W | [M] EB/EG |
| R5800 | ERJ6GEYJ394V | 390K 1/8W | [M] EE |
| R5801 | ERJ6GEYJ223V | 22K 1/8W | [M] EB/EG |
| R5801 | MAZ81800ML | DIODE | [M] EE |
| R5802 | ERJ3RBD272V | 2.7K 1/16W | [M] |
| R5803 | ERJ6GEY0R00V | 0 1/8W | [M] |
| R5804 | ERJ6RBD473V | 47K 1/10W | [M] |
| R5805 | ERJ3RBD222V | 2.2K 1/16W | [M] |
| R5806 | ERJ3GEYJ153V | 15K 1/10W | [M] |
| R5807 | ERJ6GEYJ331V | 330 1/8W | [M] |
| R5808 | ERJ6GEYJ222V | 2.2K 1/8W | [M] |
| R5809 | ERJ6GEYJ331V | 330 1/8W | [M] |
| R5810 | ERJ3GEYJ331V | 330 1/10W | [M] |
| R5811 | ERJ8GEYJ152V | 1.5K 1/4W | [M] |
| R5812 | ERJ3RBD822V | 8.2K 1/16W | [M] |
| R5813 | ERJ3RBD243V | 24K 1/16W | [M] |
| R5814 | ERJ3GEYJ822V | 8.2K 1/10W | [M] |
| R5815 | ERJ3GEYJ272V | 2.7K 1/10W | [M] |
| R5816 | ERJ8GEYJ152V | 1.5K 1/4W | [M] |
| R5817 | ERJ3GEYJ331V | 330 1/10W | [M] |
| R5820 | ERG2SJ910E | 91 2W | [M] |
| R5821 | ERG2SJ910E | 91 2W | [M] |
| R5822 | ERG2SJ910E | 91 2W | [M] |
| R5823 | ERG2SJ910E | 91 2W | [M] |
| R5824 | ERG2SJ910E | 91 2W | [M] |
| R5825 | ERJ3GEYJ102V | 1K 1/10W | [M] |
| R5832 | ERJ1TYJ222U | 2.2K 1W | [M] |
| R5834 | ERJ1TYJ222U | 2.2K 1W | [M] |
| R5860 | ERJ3GEYF103V | 10K 1/10W | [M] |
| R5861 | ERJ3GEYF392V | 3.9K 1/10W | [M] |
| R5862 | ERJ6GEYJ103V | 10K 1/8W | [M] |
| R5863 | ERJ6GEYJ103V | 10K 1/8W | [M] |
| R5864 | ERJ6GEYF103V | 10K 1/8W | [M] |
| R5890 | ERJ3GEYJ222V | 2.2K 1/10W | [M] |
| R5891 | ERJ3RBD333V | 33K 1/16W | [M] |
| R5892 | ERJ3RBD272V | 2.7K 1/16W | [M] |
| R5893 | ERJ3RBD393V | 39K 1/16W | [M] |
| R5894 | ERJ3GEYJ102V | 1K 1/10W | [M] |
| R5895 | ERJ3GEYJ102V | 1K 1/10W | [M] |
| R5896 | ERJ3GEYJ104V | 100K 1/10W | [M] |

| Ref. No. | Part No. | Part Name & Description | Remarks |
|---|---|---|---|
| R5897 | ERJ3GEYJ101V | 100 1/10W | [M] |
| R5898 | ERJ3GEYJ824V | 820K 1/10W | [M] |
| R5991 | ERJ3GEYJ563V | 56K 1/10W | [M] |
| R7001 | ERDS1FVJ1R2T | 1.2 1/2W | [M] |
| R7003 | ERJ3GEYJ102V | 1K 1/10W | [M] |
| R7004 | ERJ3GEYJ272V | 2.7K 1/10W | [M] |
| R7006 | ERJ3GEYJ470V | 47 1/10W | [M] |
| R7007 | ERJ6GEYJ152V | 1.5K 1/8W | [M] |
| R7009 | ERJ3GEYJ272V | 2.7K 1/10W | [M] |
| R7010 | ERJ3GEYJ471V | 470 1/10W | [M] |
| R7011 | ERJ6GEYJ182V | 1.8K 1/8W | [M] |
| R7012 | ERJ3GEYJ272V | 2.7K 1/10W | [M] |
| R7013 | ERJ3GEYJ473V | 47K 1/10W | [M] |
| R7028 | ERJ3GEYJ393V | 39K 1/10W | [M] |
| R7029 | ERJ3EKF1801V | 18 1/10W | [M] |
| R7030 | ERJ3RBD5601V | 5.6K 1/16W | [M] |
| R7031 | ERJ3GEY0R00V | 0 1/10W | [M] |
| R7032 | ERJ3GEYJ273V | 27K 1/10W | [M] |
| R7033 | ERJ3GEYJ562V | 5.6K 1/10W | [M] |
| R7065 | ERJ3RBD2202V | 22K 1/16W | [M] |
| R7066 | ERJ3RBD4700V | 470 1/16W | [M] |
| R7067 | ERJ3RBD1002V | 10K 1/16W | [M] |
| R7126 | ERJ3GEYJ473V | 47K 1/10W | [M] |
| R7729 | ERJ3GEYJ103V | 10K 1/10W | [M] |
| R7730 | ERJ3GEYJ123V | 12K 1/10W | [M] |
| R7731 | ERJ3GEYJ683V | 68K 1/10W | [M] |
| R7765 | ERJ3RBD1002V | 10K 1/16W | [M] |
| R7766 | ERJ3RBD3300V | 330 1/16W | [M] |
| R7767 | ERJ3RBD1002V | 10K 1/16W | [M] |
| R8001 | ERJ3GEYJ101V | 100 1/10W | [M] |
| R8002 | ERJ3GEYJ101V | 100 1/10W | [M] |
| R8003 | ERJ3GEYJ101V | 100 1/10W | [M] |
| R8004 | ERJ3GEYJ101V | 100 1/10W | [M] |
| R8005 | ERJ3GEYJ101V | 100 1/10W | [M] |
| R8006 | ERJ3GEYJ101V | 100 1/10W | [M] |
| R8007 | ERJ3GEYJ101V | 100 1/10W | [M] |
| R8008 | ERJ3GEYJ101V | 100 1/10W | [M] |
| R8009 | ERJ3GEYJ101V | 100 1/10W | [M] |
| R8010 | ERJ3GEYJ101V | 100 1/10W | [M] |
| R8012 | ERJ3GEYJ221V | 220 1/10W | [M] |
| R8013 | ERJ3GEYJ103V | 10K 1/10W | [M] |
| R8014 | ERJ3GEYJ223V | 22K 1/10W | [M] |
| R8016 | ERJ3GEY0R00V | 0 1/16W | [M] |
| R8017 | ERJ3GEYJ562V | 5.6K 1/10W | [M] |
| R8019 | ERJ3GEYJ101V | 100 1/10W | [M] |
| R8020 | ERJ3GEYJ101V | 100 1/10W | [M] |
| R8021 | ERJ3GEYJ101V | 100 1/10W | [M] |
| R8022 | ERJ3GEYJ101V | 100 1/10W | [M] |
| R8023 | ERJ3GEYJ101V | 100 1/10W | [M] |
| R8024 | ERJ3GEYJ103V | 10K 1/10W | [M] |
| R8026 | ERJ3GEYJ101V | 100 1/10W | [M] |
| R8027 | ERJ3GEYJ101V | 100 1/10W | [M] |
| R8028 | ERJ3GEYJ101V | 100 1/10W | [M] |
| R8029 | ERJ3GEYJ101V | 100 1/10W | [M] |
| R8030 | ERJ3GEYJ101V | 100 1/10W | [M] |
| R8031 | ERJ3GEYJ101V | 100 1/10W | [M] |
| R8032 | ERJ3GEYJ101V | 100 1/10W | [M] |
| R8033 | ERJ3GEYJ101V | 100 1/10W | [M] |
| R8034 | ERJ3GEYJ101V | 100 1/10W | [M] |
| R8035 | ERJ3GEYJ101V | 100 1/10W | [M] |
| R8036 | ERJ3GEYJ101V | 100 1/10W | [M] |
| R8038 | ERJ3GEYJ101V | 100 1/10W | [M] |
| R8039 | ERJ3GEYJ104V | 100K 1/10W | [M] |
| R8040 | ERJ3GEYJ101V | 100 1/10W | [M] |
| R8041 | ERJ3GEYJ101V | 100 1/10W | [M] |
| R8042 | ERJ3GEYJ101V | 100 1/10W | [M] |
| R8043 | ERJ3GEYJ101V | 100 1/10W | [M] |
| R8044 | ERJ3GEYJ101V | 100 1/10W | [M] |
| R8045 | ERJ3GEYJ101V | 100 1/10W | [M] |
| R8046 | ERJ3GEYJ101V | 100 1/10W | [M] |
| R8047 | ERJ3GEYJ101V | 100 1/10W | [M] |
| R8048 | ERJ3GEYJ101V | 100 1/10W | [M] |
| R8049 | ERJ3GEYJ101V | 100 1/10W | [M] |

| Ref. No. | Part No. | Part Name & Description | Remarks |
|---|---|---|---|
| R8050 | ERJ3GEYJ101V | 100 1/10W | [M] |
| R8051 | ERJ3GEYJ101V | 100 1/10W | [M] |
| R8052 | ERJ3GEYJ101V | 100 1/10W | [M] |
| R8053 | ERJ3GEYJ101V | 100 1/10W | [M] |
| R8054 | ERJ3GEYJ101V | 100 1/10W | [M] |
| R8055 | ERJ3GEYJ101V | 100 1/10W | [M] |
| R8056 | ERJ3GEYJ101V | 100 1/10W | [M] |
| R8057 | ERJ3GEYJ101V | 100 1/10W | [M] |
| R8058 | ERJ3GEYJ101V | 100 1/10W | [M] |
| R8059 | ERJ3GEYJ101V | 100 1/10W | [M] |
| R8060 | ERJ3GEYJ101V | 100 1/10W | [M] |
| R8061 | ERJ3GEYJ473V | 47K 1/10W | [M] |
| R8062 | ERJ3GEYJ101V | 100 1/10W | [M] |
| R8063 | ERJ3GEYJ223V | 22K 1/10W | [M] |
| R8064 | ERJ3GEYJ101V | 100 1/10W | [M] |
| R8065 | ERJ3GEYJ101V | 100 1/10W | [M] |
| R8066 | ERJ3GEYJ101V | 100 1/10W | [M] |
| R8067 | ERJ3GEYJ101V | 100 1/10W | [M] |
| R8068 | ERJ3GEYJ101V | 100 1/10W | [M] |
| R8069 | ERJ3GEYJ101V | 100 1/10W | [M] |
| R8070 | ERJ3GEYJ101V | 100 1/10W | [M] |
| R8071 | ERJ3GEYJ101V | 100 1/10W | [M] |
| R8072 | ERJ3GEYJ101V | 100 1/10W | [M] EB/EG |
| R8073 | ERJ3GEYJ101V | 100 1/10W | [M] EB/EG |
| R8074 | ERJ3GEYJ101V | 100 1/10W | [M] EB/EG |
| R8076 | ERJ3GEYJ101V | 100 1/10W | [M] |
| R8077 | ERJ3GEYJ101V | 100 1/10W | [M] |
| R8078 | ERJ3GEYJ101V | 100 1/10W | [M] |
| R8079 | ERJ3GEYJ101V | 100 1/10W | [M] |
| R8080 | ERJ3GEYJ101V | 100 1/10W | [M] |
| R8081 | ERJ3GEYJ101V | 100 1/10W | [M] |
| R8082 | ERJ3GEYJ101V | 100 1/10W | [M] |
| R8083 | ERJ3GEYJ101V | 100 1/10W | [M] |
| R8084 | ERJ3GEYJ101V | 100 1/10W | [M] |
| R8085 | ERJ3GEYJ101V | 100 1/10W | [M] |
| R8086 | ERJ3GEYJ101V | 100 1/10W | [M] |
| R8087 | ERJ3GEYJ101V | 100 1/10W | [M] |
| R8088 | ERJ3GEYJ101V | 100 1/10W | [M] |
| R8090 | ERJ3GEYJ101V | 100 1/10W | [M] |
| R8092 | ERJ3GEYJ101V | 100 1/10W | [M] |
| R8093 | ERJ3GEYJ101V | 100 1/10W | [M] |
| R8094 | ERJ3GEYJ101V | 100 1/10W | [M] |
| R8095 | ERJ3GEYJ103V | 10K 1/10W | [M] |
| R8096 | ERJ3GEYJ562V | 5.6K 1/10W | [M] EE |
| R8098 | ERJ3GEYJ101V | 100 1/10W | [M] |
| R8099 | ERJ3GEYJ101V | 100 1/10W | [M] |
| R8100 | ERJ3GEYJ103V | 10K 1/10W | [M] |
| R8101 | ERJ3GEYJ473V | 47K 1/10W | [M] |
| R8102 | ERJ3GEYJ473V | 47K 1/10W | [M] |
| R8103 | ERJ3GEYJ472V | 4.7K 1/10W | [M] |
| R8104 | ERJ3GEYJ472V | 4.7K 1/10W | [M] |
| R8105 | ERJ3GEYJ102V | 1K 1/10W | [M] |
| R8106 | ERJ3GEYJ103V | 10K 1/10W | [M] |
| R8107 | ERJ3GEYJ103V | 10K 1/10W | [M] |
| R8108 | ERJ3GEYJ103V | 10K 1/10W | [M] |
| R8111 | ERJ3GEYJ103V | 10K 1/10W | [M] |
| R8112 | ERJ3GEYJ103V | 10K 1/10W | [M] |
| R8113 | ERJ3GEYJ473V | 47K 1/10W | [M] |
| R8114 | ERJ3GEYJ473V | 47K 1/10W | [M] |
| R8115 | ERJ3GEYJ473V | 47K 1/10W | [M] |
| R8116 | ERJ3GEYJ473V | 47K 1/10W | [M] |
| R8131 | ERJ3GEYJ393V | 39K 1/10W | [M] |
| R8132 | ERJ3GEYJ393V | 39K 1/10W | [M] |
| R8134 | ERJ3GEYJ103V | 10K 1/10W | [M] |
| R8135 | ERJ3GEYJ103V | 10K 1/10W | [M] |
| R8136 | ERJ3GEY0R00V | 0 1/10W | [M] |
| R8137 | ERJ3GEY0R00V | 0 1/10W | [M] |
| R8147 | ERJ3GEYJ104V | 100K 1/10W | [M] |
| R8148 | ERJ3GEYJ103V | 10K 1/10W | [M] |
| R8151 | ERJ3GEYJ224V | 220K 1/10W | [M] |
| R8152 | ERJ3GEYJ104V | 100K 1/10W | [M] |

| Ref. No. | Part No. | Part Name & Description | Remarks |
|---|---|---|---|
| R8159 | ERJ3GEYJ224V | 220K 1/10W | [M] |
| R8191 | ERJ3GEYJ473V | 47K 1/10W | [M] |
| R8195 | ERJ3GEYJ101V | 100 1/10W | [M] |
| R8401 | ERJ3GEYJ102V | 1K 1/10W | [M] |
| R8402 | ERJ3GEYJ102V | 1K 1/10W | [M] |
| R8403 | ERJ3GEYJ102V | 1K 1/10W | [M] |
| R8404 | ERJ3GEYJ102V | 1K 1/10W | [M] |
| R8407 | ERJ3GEYJ102V | 1K 1/10W | [M] |
| R8408 | ERJ3GEYJ102V | 1K 1/10W | [M] |
| R8411 | ERJ3GEYJ104V | 100K 1/10W | [M] |
| R8413 | ERJ3GEYJ104V | 100K 1/10W | [M] |
| R8414 | ERJ3GEYJ104V | 100K 1/10W | [M] |
| R8415 | ERJ3GEYJ104V | 100K 1/10W | [M] |
| R8416 | ERJ3GEYJ104V | 100K 1/10W | [M] |
| R8417 | ERJ3GEYJ104V | 100K 1/10W | [M] |
| R8501 | ERJ3GEY0R00V | 0 1/10W | [M] |
| R8502 | ERJ3GEY0R00V | 0 1/10W | [M] |
| R8503 | ERJ3GEY0R00V | 0 1/10W | [M] |
| R8504 | ERJ3GEY0R00V | 0 1/10W | [M] |
| R8505 | ERJ3GEY0R00V | 0 1/10W | [M] |
| R8506 | ERJ3GEY0R00V | 0 1/10W | [M] |
| R8531 | ERJ3GEY0R00V | 0 1/10W | [M] |
| | | | |
| RX2101 | D1H83304A024 | RESISTOR NETWORK | [M] |
| RX2231 | D1H83304A024 | RESISTOR NETWORK | [M] |
| RX2232 | D1H83304A024 | RESISTOR NETWORK | [M] |
| RX2233 | D1H83304A024 | RESISTOR NETWORK | [M] |
| RX2234 | D1H83304A024 | RESISTOR NETWORK | [M] |
| RX2235 | D1H83304A024 | RESISTOR NETWORK | [M] |
| RX2236 | D1H83304A024 | RESISTOR NETWORK | [M] |
| RX2237 | D1H83304A024 | RESISTOR NETWORK | [M] |
| RX2238 | D1H83304A024 | RESISTOR NETWORK | [M] |
| RX2239 | D1H83304A024 | RESISTOR NETWORK | [M] |
| RX2240 | D1H83304A024 | RESISTOR NETWORK | [M] |
| RX2241 | D1H83304A024 | RESISTOR NETWORK | [M] |
| | | | |
| | | CAPACITORS | |
| | | | |
| C103 | ECJ1VC1H220J | 22pF 50V | [M] |
| C104 | ECJ1VC1H220J | 22pF 50V | [M] |
| C106 | F1H1E105A116 | 1uF 25V | [M] |
| C107 | ECA1CAK470XB | 47uF 16V | [M] |
| C121 | ECJ1VB1C105K | 1uF 16V | [M] |
| C129 | ECJ1VB1H104K | 0.1uF 50V | [M] |
| C201 | ECJ1VC1H470J | 47pF 50V | [M] EB/EG |
| C202 | ECJ1VC1H470J | 47pF 50V | [M] EB/EG |
| C203 | ECJ1VC1H561J | 560pF 50V | [M] EB/EG |
| C204 | ECJ1VC1H331J | 330pF 50V | [M] EB/EG |
| C205 | ECJ1VB1H103K | 0.01uF 50V | [M] EB/EG |
| C206 | ECA1CAK470XB | 47uF 16V | [M] EB/EG |
| C207 | ECA1CAK470XB | 47uF 16V | [M] EB/EG |
| C208 | ECJ1VB1H103K | 0.01uF 50V | [M] EB/EG |
| C209 | ECA1CAK100XB | 10uF 16V | [M] EB/EG |
| C508 | ECJ1VC1H101J | 100pF 50V | [M] |
| C510 | ECJ1VC1H101J | 100pF 50V | [M] |
| C511 | ECJ1VC1H101J | 100pF 50V | [M] |
| C513 | ECJ1VC1H101J | 100pF 50V | [M] |
| C515 | ECA0JAK101XB | 100uF 6.3V | [M] |
| C518 | ECJ1VB1H103K | 0.01uF 50V | [M] |
| C522 | ECJ1VB1H103K | 0.01uF 50V | [M] |
| C527 | ECJ1VB1H102K | 1000pF 50V | [M] |
| C532 | F1J1A106A043 | 10uF 10V | [M] |
| C533 | ECA1HM101B | 100uF 50V | [M] |
| C533 | F1J1A106A043 | 10uF 10V | [M] |
| C536 | ECA1HAK220XB | 22uF 50V | [M] |
| C538 | ECA1HAK220XB | 22uF 50V | [M] |

| Ref. No. | Part No. | Part Name & Description | Remarks |
|---|---|---|---|
| C539 | ECA1CAK470XB | 47uF 16V | [M] |
| C540 | ECJ1VB1H223K | 0.022uF 50V | [M] |
| C541 | ECA1CAK100XB | 10uF 16V | [M] |
| C542 | ECJ1VB1C105K | 1uF 16V | [M] |
| C543 | ECJ1VB1C105K | 1uF 16V | [M] |
| C544 | ECJ1VB1H104K | 0.1uF 50V | [M] |
| C545 | ECJ1VB1C105K | 1uF 16V | [M] |
| C546 | ECJ1VC1H221J | 220pF 50V | [M] |
| C547 | ECJ1VB1H102K | 1000pF 50V | [M] |
| C548 | ECJ1VB1H102K | 1000pF 50V | [M] |
| C549 | ECJ1VC1H471J | 470pF 50V | [M] |
| C550 | ECJ1VC1H680J | 68pF 50V | [M] |
| C551 | ECJ1VB1H104K | 0.1uF 50V | [M] |
| C552 | ECJ1VC1H101J | 100pF 50V | [M] |
| C553 | ECJ1VC1H101J | 100pF 50V | [M] |
| C554 | ECA1CAK470XB | 47uF 16V | [M] |
| C555 | ECJ1VC1H101J | 100pF 50V | [M] |
| C556 | ECJ1VC1H101J | 100pF 50V | [M] |
| C557 | ECJ1VB1H103K | 0.01uF 50V | [M] |
| C558 | ECJ1VB1H102K | 1000pF 50V | [M] |
| C559 | ECJ1VB1H103K | 0.01uF 50V | [M] |
| C560 | ECJ1VC1H101J | 100pF 50V | [M] |
| C561 | ECJ1VC1H101J | 100pF 50V | [M] |
| C562 | ECA1CAK100XB | 10uF 16V | [M] |
| C563 | ECJ1VB1C104K | 0.1uF 16V | [M] |
| C564 | ECJ1VB1H102K | 1000pF 50V | [M] |
| C565 | ECJ1VB1H103K | 0.01uF 50V | [M] |
| C566 | ECJ1VB1H103K | 0.01uF 50V | [M] |
| C567 | ECJ1VB1H103K | 0.01uF 50V | [M] |
| C568 | ECJ1VB1H103K | 0.01uF 50V | [M] |
| C601 | ECJ1VB1H103K | 0.01uF 50V | [M] |
| C602 | ECJ1VB1H103K | 0.01uF 50V | [M] |
| C603 | ECJ1VB1H102K | 1000pF 50V | [M] |
| C621 | ECJ1VC1H101J | 100pF 50V | [M] |
| C622 | ECJ1VC1H101J | 100pF 50V | [M] |
| C698 | ERJ3GEY0R00V | 0 1/10W | [M] |
| C1001 | ECA1CAK470XB | 47uF 16V | [M] |
| C1002 | ECA1CAK470XB | 47uF 16V | [M] |
| C1003 | ECA1CAK470XB | 47uF 16V | [M] |
| C1004 | ECJ1VC1H470J | 47pF 50V | [M] |
| C1005 | ECJ1VC1H470J | 47pF 50V | [M] |
| C1006 | ECJ1VB1H104K | 0.1uF 50V | [M] |
| C1007 | ECJ1VB1H104K | 0.1uF 50V | [M] |
| C1008 | ECJ1VB1H104K | 0.1uF 50V | [M] |
| C1009 | ECA0JAK101XB | 100uF 6.3V | [M] |
| C1010 | ECA0JAK101XB | 100uF 6.3V | [M] |
| C1011 | F1K1C1050005 | 1uF 16V | [M] |
| C1012 | F1K1C1050005 | 1uF 16V | [M] |
| C1013 | F1K1C1050005 | 1uF 16V | [M] |
| C1014 | F1K1C1050005 | 1uF 16V | [M] |
| C1015 | F1K1C1050005 | 1uF 16V | [M] |
| C1016 | F1K1C1050005 | 1uF 16V | [M] |
| C1017 | ECJ1VB1H104K | 0.1uF 50V | [M] |
| C1018 | ECJ1VB1H104K | 0.1uF 50V | [M] |
| C1019 | ECJ1VB1H104K | 0.1uF 50V | [M] |
| C1020 | ECA0JAK101XB | 100uF 6.3V | [M] |
| C1021 | ECA0JAK101XB | 100uF 6.3V | [M] |
| C1022 | F1H1H103A219 | 0.01uF 50V | [M] |
| C1023 | F1H1H103A219 | 0.01uF 50V | [M] |
| C1024 | ECA0JAK101XB | 100uF 6.3V | [M] |
| C1025 | ECA0JAK101XB | 100uF 6.3V | [M] |
| C1026 | F1H1H103A219 | 0.01uF 50V | [M] |
| C1028 | ECA0JAK101XB | 100uF 6.3V | [M] |
| C1029 | ECA0JAK101XB | 100uF 6.3V | [M] |
| C1030 | F1H1E105A116 | 1uF 25V | [M] |
| C1031 | ECJ1VB1H103K | 0.01uF 50V | [M] |
| C1032 | ECJ1VC1H470J | 47pF 50V | [M] |
| C1033 | F1K1C1050005 | 1uF 16V | [M] |
| C1034 | F1K1C1050005 | 1uF 16V | [M] |
| C1035 | F1K1C1050005 | 1uF 16V | [M] |
| C1036 | F1K1C1050005 | 1uF 16V | [M] |
| C1037 | F1K1C1050005 | 1uF 16V | [M] |
| C1038 | ECA1CAK470XB | 47uF 16V | [M] |

| Ref. No. | Part No. | Part Name & Description | Remarks |
|---|---|---|---|
| C1051 | ECA0JAK101XB | 100uF 6.3V | [M] |
| C1052 | ECA0JAK101XB | 100uF 6.3V | [M] |
| C1053 | F1K1C1050005 | 1uF 16V | [M] |
| C1054 | ECJ1VB1H223K | 0.022uF 50V | [M] |
| C1055 | F1K1C1050005 | 1uF 16V | [M] |
| C1056 | ECJ1VB1H223K | 0.022uF 50V | [M] |
| C1057 | ECJ1VB1H104K | 0.1uF 50V | [M] |
| C1058 | ECJ1VC1H470J | 47pF 50V | [M] |
| C1059 | ECJ1VB1H104K | 0.1uF 50V | [M] |
| C1060 | ECA0JAK101XB | 100uF 6.3V | [M] |
| C1061 | ECA1CAK470XB | 47uF 16V | [M] |
| C1062 | ECJ1VB1H223K | 0.022uF 50V | [M] |
| C1063 | ECJ1VB1H104K | 0.1uF 50V | [M] |
| C1064 | ECJ1VC1H470J | 47pF 50V | [M] |
| C1065 | ECJ1VB1H104K | 0.1uF 50V | [M] |
| C1066 | ECA0JAK101XB | 100uF 6.3V | [M] |
| C1067 | ECJ1VB1E223K | 0.022uF 25V | [M] |
| C1068 | ECJ1VB1H103K | 0.01uF 50V | [M] |
| C1069 | ECJ1VB1H103K | 0.01uF 50V | [M] |
| C1070 | ECJ1VB1H223K | 0.022uF 50V | [M] |
| C1071 | ECJ1VC1H470J | 47pF 50V | [M] |
| C1072 | ECJ1VC1H470J | 47pF 50V | [M] |
| C1073 | ECJ1VB1H223K | 0.022uF 50V | [M] |
| C1074 | ECJ1VC1H470J | 47pF 50V | [M] |
| C1075 | ECJ1VC1H470J | 47pF 50V | [M] |
| C1076 | ECJ1VB1E223K | 0.022uF 25V | [M] |
| C1077 | ECJ1VB1E223K | 0.022uF 25V | [M] |
| C1078 | ECA1CAK470XB | 47uF 16V | [M] |
| C1079 | ECA1CAK470XB | 47uF 16V | [M] |
| C1080 | ECA1CAK470XB | 47uF 16V | [M] |
| C1081 | ECJ1VB1H223K | 0.022uF 50V | [M] |
| C1082 | ECJ1VB1H223K | 0.022uF 50V | [M] |
| C1101 | ECJ1VB1H104K | 0.1uF 50V | [M] |
| C1102 | F2A0J101A245 | 100uF 6.3V | [M] |
| C1108 | F1J1A106A043 | 10uF 10V | [M] |
| C1109 | ECJ1VB1H104K | 0.1uF 50V | [M] |
| C1110 | ECJ1VB1H104K | 0.1uF 50V | [M] |
| C1113 | ECJ1VC1H101J | 100pF 50V | [M] |
| C1114 | ECJ1VC1H101J | 100pF 50V | [M] |
| C1115 | ECJ1VC1H330J | 33pF 50V | [M] |
| C1116 | ECJ1VC1H330J | 33pF 50V | [M] |
| C1117 | ECJ1VB1A105K | 1uF 10V | [M] |
| C1118 | ECJ1VB1A105K | 1uF 10V | [M] |
| C1119 | ECJ1VB1H471K | 470pF 50V | [M] |
| C1120 | ECJ1VB1H471K | 470pF 50V | [M] |
| C1027 | F1H1H103A219 | 0.01uF 50V | [M] |
| C2001 | ECJ1VB1C104K | 0.1uF 16V | [M] |
| C2002 | ECJ1VB0J105K | 1uF 6.3V | [M] |
| C2003 | ECJ1VB1H103K | 0.01uF 50V | [M] |
| C2004 | ECJ1VB1H102K | 1000pF 50V | [M] |
| C2005 | ECJ1VB1C104K | 0.1uF 16V | [M] |
| C2006 | ECJ1VB1H103K | 0.01uF 50V | [M] |
| C2007 | ECJ1VB1C104K | 0.1uF 16V | [M] |
| C2008 | ECJ1VB1C104K | 0.1uF 16V | [M] |
| C2009 | ECJ1VB1C104K | 0.1uF 16V | [M] |
| C2010 | ECJ1VB1H102K | 1000pF 50V | [M] |
| C2011 | EEE0JA101SP | 100uF 6.3V | [M] |
| C2012 | ECJ1VB1H102K | 1000pF 50V | [M] |
| C2013 | ECJ1VB0J105K | 1uF 6.3V | [M] |
| C2014 | EEE0JA101SP | 100uF 6.3V | [M] |
| C2015 | ECJ1VB0J105K | 1uF 6.3V | [M] |
| C2016 | ECJ1VB0J105K | 1uF 6.3V | [M] |
| C2017 | ECJ1VB0J105K | 1uF 6.3V | [M] |
| C2018 | ECJ1VB1H103K | 0.01uF 50V | [M] |
| C2019 | ECJ1VB0J105K | 1uF 6.3V | [M] |
| C2101 | ECJ1VB0J105K | 1uF 6.3V | [M] |
| C2102 | ECJ1VC1H331J | 330pF 50V | [M] |
| C2103 | ECJ1VC1H221J | 220pF 50V | [M] |
| C2104 | F1J1A106A043 | 10uF 10V | [M] |
| C2105 | F1J1A106A043 | 10uF 10V | [M] |
| C2106 | F1J1A106A043 | 10uF 10V | [M] |
| C2107 | ECJ1VB1C104K | 0.1uF 16V | [M] |
| C2108 | F1J1A106A043 | 10uF 10V | [M] |

| Ref. No. | Part No. | Part Name & Description | Remarks |
|---|---|---|---|
| C2109 | ECJ1VB1H102K | 1000pF 50V | [M] |
| C2110 | ECJ1VB1H102K | 1000pF 50V | [M] |
| C2111 | ECJ1VB1H102K | 1000pF 50V | [M] |
| C2112 | ECJ1VB1H102K | 1000pF 50V | [M] |
| C2113 | ECJ1VB1C104K | 0.1uF 16V | [M] |
| C2114 | F1J1A106A043 | 10uF 10V | [M] |
| C2115 | ECJ1VB1C104K | 0.1uF 16V | [M] |
| C2116 | ECJ1VB1C104K | 0.1uF 16V | [M] |
| C2117 | ECJ1VB1H102K | 1000pF 50V | [M] |
| C2118 | ECJ1VB1C104K | 0.1uF 16V | [M] |
| C2119 | ECJ1VB1C104K | 0.1uF 16V | [M] |
| C2120 | ECJ1VB1C104K | 0.1uF 16V | [M] |
| C2121 | ECJ1VB1C104K | 0.1uF 16V | [M] |
| C2122 | ECJ1VB1C104K | 0.1uF 16V | [M] |
| C2123 | F1J1A106A043 | 10uF 10V | [M] |
| C2124 | F1J1A106A043 | 10uF 10V | [M] |
| C2125 | ECJ1VB1C104K | 0.1uF 16V | [M] |
| C2126 | ECJ1VB1C104K | 0.1uF 16V | [M] |
| C2127 | EEE0GA331WP | 330uF 4V | [M] |
| C2128 | ECJ1VB1C104K | 0.1uF 16V | [M] |
| C2201 | ECJ1VB1C104K | 0.1uF 16V | [M] |
| C2202 | ECJ1VB1C104K | 0.1uF 16V | [M] |
| C2203 | ECJ1VB1H102K | 1000pF 50V | [M] |
| C2204 | ECJ1VB1H102K | 1000pF 50V | [M] |
| C2205 | ECJ1VB1H102K | 1000pF 50V | [M] |
| C2206 | ECJ1VB1H102K | 1000pF 50V | [M] |
| C2207 | ECJ1VB1H102K | 1000pF 50V | [M] |
| C2208 | ECJ1VB1C104K | 0.1uF 16V | [M] |
| C2209 | ECJ1VB1C104K | 0.1uF 16V | [M] |
| C2210 | ECJ1VB1C104K | 0.1uF 16V | [M] |
| C2211 | ECJ1VB1C104K | 0.1uF 16V | [M] |
| C2212 | ECJ1VB1C104K | 0.1uF 16V | [M] |
| C2213 | ECJ1VB1C104K | 0.1uF 16V | [M] |
| C2214 | F1J1A106A043 | 10uF 10V | [M] |
| C2215 | F1J1A106A043 | 10uF 10V | [M] |
| C2216 | ECJ1VB1C104K | 0.1uF 16V | [M] |
| C2217 | ECJ1VB1C104K | 0.1uF 16V | [M] |
| C2218 | F1J1A106A043 | 10uF 10V | [M] |
| C2219 | ECJ1VB1H102K | 1000pF 50V | [M] |
| C2220 | ECJ1VB1C104K | 0.1uF 16V | [M] |
| C2221 | ECJ1VB1C104K | 0.1uF 16V | [M] |
| C2222 | ECJ1VB1C104K | 0.1uF 16V | [M] |
| C2223 | ECJ1VB1C104K | 0.1uF 16V | [M] |
| C2224 | ECJ1VB0J105K | 1uF 6.3V | [M] |
| C2231 | ECJ1VB1C104K | 0.1uF 16V | [M] |
| C2232 | ECJ1VB0J105K | 1uF 6.3V | [M] |
| C2233 | F1J1A106A043 | 10uF 10V | [M] |
| C2234 | F1J1A106A043 | 10uF 10V | [M] |
| C2235 | ECJ1VB0J105K | 1uF 6.3V | [M] |
| C2236 | ECJ1VB1C104K | 0.1uF 16V | [M] |
| C2237 | ECJ1VB1C104K | 0.1uF 16V | [M] |
| C2238 | ECJ1VB1C104K | 0.1uF 16V | [M] |
| C2239 | ECJ1VB1C104K | 0.1uF 16V | [M] |
| C2240 | ECJ1VB1C104K | 0.1uF 16V | [M] |
| C2241 | ECJ1VB0J105K | 1uF 6.3V | [M] |
| C2242 | ECJ1VB1C104K | 0.1uF 16V | [M] |
| C2243 | ECJ1VB1C104K | 0.1uF 16V | [M] |
| C2244 | ECJ1VB1C104K | 0.1uF 16V | [M] |
| C2245 | ECJ1VB1C104K | 0.1uF 16V | [M] |
| C2246 | ECJ1VB1C104K | 0.1uF 16V | [M] |
| C2247 | ECJ1VB0J105K | 1uF 6.3V | [M] |
| C2248 | ECJ1VB1C104K | 0.1uF 16V | [M] |
| C2249 | ECJ1VB1C104K | 0.1uF 16V | [M] |
| C2250 | ECJ1VB1C104K | 0.1uF 16V | [M] |
| C2251 | ECJ1VB1C104K | 0.1uF 16V | [M] |
| C2252 | ECJ1VB1C104K | 0.1uF 16V | [M] |
| C2253 | ECJ1VB0J105K | 1uF 6.3V | [M] |
| C2254 | ECJ1VB1C104K | 0.1uF 16V | [M] |
| C2255 | ECJ1VB1C104K | 0.1uF 16V | [M] |
| C2256 | ECJ1VC1H180J | 18pF 50V | [M] |
| C2257 | ECJ1VC1H180J | 18pF 50V | [M] |
| C2258 | ECJ1VB0J105K | 1uF 6.3V | [M] |
| C2259 | ECJ1VB0J105K | 1uF 6.3V | [M] |

| Ref. No. | Part No. | Part Name & Description | Remarks |
|---|---|---|---|
| C2260 | ECJ1VB1C104K | 0.1uF 16V | [M] |
| C2261 | ECJ1VB1H102K | 1000pF 50V | [M] |
| C2262 | ECJ1VB1C104K | 0.1uF 16V | [M] |
| C2263 | ECJ1VB1C104K | 0.1uF 16V | [M] |
| C2264 | ECJ1VB1C104K | 0.1uF 16V | [M] |
| C2265 | EEE0JA101SP | 100uF 6.3V | [M] |
| C2266 | ECJ1VB0J105K | 1uF 6.3V | [M] |
| C2267 | ECJ1VB0J105K | 1uF 6.3V | [M] |
| C2268 | ECJ1VB1C104K | 0.1uF 16V | [M] |
| C2269 | EEE0GA331WP | 330uF 4V | [M] |
| C2270 | ECJ1VB1C104K | 0.1uF 16V | [M] |
| C2271 | ECJ1VB1C104K | 0.1uF 16V | [M] |
| C2272 | ECJ1VB0J105K | 1uF 6.3V | [M] |
| C2273 | ECJ1VB1C104K | 0.1uF 16V | [M] |
| C2274 | ECJ1VB1C104K | 0.1uF 16V | [M] |
| C2275 | ECJ1VB1C104K | 0.1uF 16V | [M] |
| C3001 | EEEFK1C220R | 22uF 16V | [M] |
| C3002 | ECJ1VB1H103K | 0.01uF 50V | [M] |
| C3003 | ECJ1VB1C104K | 0.1uF 16V | [M] |
| C3004 | ECJ1VB0J105K | 1uF 6.3V | [M] |
| C3005 | ECJ1VB1C104K | 0.1uF 16V | [M] |
| C3006 | ECJ1VB1C104K | 0.1uF 16V | [M] |
| C3007 | ECJ1VB1C104K | 0.1uF 16V | [M] |
| C3008 | ECJ1VB1C104K | 0.1uF 16V | [M] |
| C3009 | ECJ1VB1C104K | 0.1uF 16V | [M] |
| C3010 | ECJ1VB0J105K | 1uF 6.3V | [M] |
| C3011 | ECJ1VB1C104K | 0.1uF 16V | [M] |
| C3012 | ECJ1VB1C104K | 0.1uF 16V | [M] |
| C3013 | ECJ1VB1C104K | 0.1uF 16V | [M] |
| C3014 | ECJ1VB1C104K | 0.1uF 16V | [M] |
| C3015 | ECJ1VB1C104K | 0.1uF 16V | [M] |
| C3016 | ECJ1VB0J105K | 1uF 6.3V | [M] |
| C3017 | ECJ1VB1C104K | 0.1uF 16V | [M] |
| C3018 | ECJ1VB1C104K | 0.1uF 16V | [M] |
| C3019 | ECJ1VB1C104K | 0.1uF 16V | [M] |
| C3020 | ECJ1VB1C104K | 0.1uF 16V | [M] |
| C3021 | ECJ1VB1C104K | 0.1uF 16V | [M] |
| C3022 | ECJ1VB1C104K | 0.1uF 16V | [M] |
| C3023 | ECJ1VB1C104K | 0.1uF 16V | [M] |
| C3024 | ECJ1VB1C104K | 0.1uF 16V | [M] |
| C3025 | ECJ1VB1C104K | 0.1uF 16V | [M] |
| C3026 | ECJ1VB1C104K | 0.1uF 16V | [M] |
| C3027 | ECJ1VB0J105K | 1uF 6.3V | [M] |
| C3028 | ECJ1VB1C104K | 0.1uF 16V | [M] |
| C3029 | ECJ1VB1C104K | 0.1uF 16V | [M] |
| C3030 | ECJ1VB0J105K | 1uF 6.3V | [M] |
| C3031 | ECJ1VB1C104K | 0.1uF 16V | [M] |
| C3032 | ECJ1VB1C104K | 0.1uF 16V | [M] |
| C3033 | ECJ1VB1C104K | 0.1uF 16V | [M] |
| C3034 | ECJ1VB1C104K | 0.1uF 16V | [M] |
| C3035 | ECJ1VB1C104K | 0.1uF 16V | [M] |
| C3036 | ECJ1VB1C104K | 0.1uF 16V | [M] |
| C3037 | ECJ1VB1C104K | 0.1uF 16V | [M] |
| C3038 | ECJ1VB1C104K | 0.1uF 16V | [M] |
| C3039 | ECJ1VB1C104K | 0.1uF 16V | [M] |
| C3040 | ECJ1VB1C104K | 0.1uF 16V | [M] |
| C3041 | ECJ1VB1C104K | 0.1uF 16V | [M] |
| C3042 | ECJ1VB1C104K | 0.1uF 16V | [M] |
| C3043 | ECJ1VB1C104K | 0.1uF 16V | [M] |
| C3044 | ECJ1VB1C104K | 0.1uF 16V | [M] |
| C3045 | ECJ1VB1C104K | 0.1uF 16V | [M] |
| C3046 | ECJ1VB1C104K | 0.1uF 16V | [M] |
| C3047 | ECJ1VB1C104K | 0.1uF 16V | [M] |
| C3048 | ECJ1VB0J105K | 1uF 6.3V | [M] |
| C3049 | F2G0J101A066 | 100uF 6.3V | [M] |
| C3050 | ECJ1VB0J105K | 1uF 6.3V | [M] |
| C3051 | ECJ1VB1C104K | 0.1uF 16V | [M] |
| C3052 | ECJ1VB1C104K | 0.1uF 16V | [M] |
| C3053 | ECJ1VB1C104K | 0.1uF 16V | [M] |
| C3054 | ECJ1VB0J105K | 1uF 6.3V | [M] |
| C3055 | ECJ1VB1C104K | 0.1uF 16V | [M] |
| C3056 | ECJ1VB1C104K | 0.1uF 16V | [M] |
| C3057 | ECJ1VB1C104K | 0.1uF 16V | [M] |

| Ref. No. | Part No. | Part Name & Description | Remarks |
|---|---|---|---|
| C3058 | ECJ1VB1C104K | 0.1uF 16V | [M] |
| C3059 | ECJ1VB1C104K | 0.1uF 16V | [M] |
| C3060 | ECJ1VB1C104K | 0.1uF 16V | [M] |
| C3061 | ECJ1VB1C104K | 0.1uF 16V | [M] |
| C3062 | ECJ1VB1C104K | 0.1uF 16V | [M] |
| C3063 | ECJ1VB1C104K | 0.1uF 16V | [M] |
| C3064 | ECJ1VB1C104K | 0.1uF 16V | [M] |
| C3065 | ECJ1VB1C104K | 0.1uF 16V | [M] |
| C3066 | ECJ1VB1C104K | 0.1uF 16V | [M] |
| C3067 | ECJ1VB1H103K | 0.01uF 50V | [M] |
| C3091 | ECJ1VB1H102K | 1000pF 50V | [M] |
| C3101 | EEEFK1C220R | 22uF 16V | [M] |
| C3102 | ECJ1VB1H103K | 0.01uF 50V | [M] |
| C3103 | ECJ1VB1C104K | 0.1uF 16V | [M] |
| C3104 | ECJ1VB0J105K | 1uF 6.3V | [M] |
| C3105 | ECJ1VB1C104K | 0.1uF 16V | [M] |
| C3106 | ECJ1VB1C104K | 0.1uF 16V | [M] |
| C3107 | ECJ1VB1C104K | 0.1uF 16V | [M] |
| C3108 | ECJ1VB1C104K | 0.1uF 16V | [M] |
| C3109 | ECJ1VB1C104K | 0.1uF 16V | [M] |
| C3110 | ECJ1VB0J105K | 1uF 6.3V | [M] |
| C3111 | ECJ1VB1C104K | 0.1uF 16V | [M] |
| C3112 | ECJ1VB1C104K | 0.1uF 16V | [M] |
| C3113 | ECJ1VB1C104K | 0.1uF 16V | [M] |
| C3114 | ECJ1VB1C104K | 0.1uF 16V | [M] |
| C3115 | ECJ1VB1C104K | 0.1uF 16V | [M] |
| C3116 | ECJ1VB0J105K | 1uF 6.3V | [M] |
| C3117 | ECJ1VB1C104K | 0.1uF 16V | [M] |
| C3118 | ECJ1VB1C104K | 0.1uF 16V | [M] |
| C3119 | ECJ1VB1C104K | 0.1uF 16V | [M] |
| C3120 | ECJ1VB1C104K | 0.1uF 16V | [M] |
| C3121 | ECJ1VB1C104K | 0.1uF 16V | [M] |
| C3122 | ECJ1VB1C104K | 0.1uF 16V | [M] |
| C3123 | ECJ1VB1C104K | 0.1uF 16V | [M] |
| C3124 | ECJ1VB1C104K | 0.1uF 16V | [M] |
| C3125 | ECJ1VB1C104K | 0.1uF 16V | [M] |
| C3126 | ECJ1VB1C104K | 0.1uF 16V | [M] |
| C3127 | ECJ1VB0J105K | 1uF 6.3V | [M] |
| C3128 | ECJ1VB1C104K | 0.1uF 16V | [M] |
| C3129 | ECJ1VB1C104K | 0.1uF 16V | [M] |
| C3130 | ECJ1VB0J105K | 1uF 6.3V | [M] |
| C3131 | ECJ1VB1C104K | 0.1uF 16V | [M] |
| C3132 | ECJ1VB1C104K | 0.1uF 16V | [M] |
| C3133 | ECJ1VB1C104K | 0.1uF 16V | [M] |
| C3134 | ECJ1VB1C104K | 0.1uF 16V | [M] |
| C3135 | ECJ1VB1C104K | 0.1uF 16V | [M] |
| C3136 | ECJ1VB1C104K | 0.1uF 16V | [M] |
| C3137 | ECJ1VB1C104K | 0.1uF 16V | [M] |
| C3138 | ECJ1VB1C104K | 0.1uF 16V | [M] |
| C3139 | ECJ1VB1C104K | 0.1uF 16V | [M] |
| C3140 | ECJ1VB1C104K | 0.1uF 16V | [M] |
| C3141 | ECJ1VB1C104K | 0.1uF 16V | [M] |
| C3142 | ECJ1VB1C104K | 0.1uF 16V | [M] |
| C3143 | ECJ1VB1C104K | 0.1uF 16V | [M] |
| C3144 | ECJ1VB1C104K | 0.1uF 16V | [M] |
| C3145 | ECJ1VB1C104K | 0.1uF 16V | [M] |
| C3146 | ECJ1VB1C104K | 0.1uF 16V | [M] |
| C3147 | ECJ1VB1C104K | 0.1uF 16V | [M] |
| C3148 | ECJ1VB0J105K | 1uF 6.3V | [M] |
| C3149 | F2G0J101A066 | 100uF 6.3V | [M] |
| C3150 | ECJ1VB0J105K | 1uF 6.3V | [M] |
| C3151 | ECJ1VB1C104K | 0.1uF 16V | [M] |
| C3152 | ECJ1VB1C104K | 0.1uF 16V | [M] |
| C3153 | ECJ1VB1C104K | 0.1uF 16V | [M] |
| C3154 | ECJ1VB0J105K | 1uF 6.3V | [M] |
| C3155 | ECJ1VB1C104K | 0.1uF 16V | [M] |
| C3156 | ECJ1VB1C104K | 0.1uF 16V | [M] |
| C3157 | ECJ1VB1C104K | 0.1uF 16V | [M] |
| C3158 | ECJ1VB1C104K | 0.1uF 16V | [M] |
| C3159 | ECJ1VB1C104K | 0.1uF 16V | [M] |
| C3160 | ECJ1VB1C104K | 0.1uF 16V | [M] |
| C3161 | ECJ1VB1C104K | 0.1uF 16V | [M] |
| C3162 | ECJ1VB1C104K | 0.1uF 16V | [M] |

| Ref. No. | Part No. | Part Name & Description | Remarks |
|---|---|---|---|
| C3163 | ECJ1VB1C104K | 0.1uF 16V | [M] |
| C3164 | ECJ1VB1C104K | 0.1uF 16V | [M] |
| C3165 | ECJ1VB1C104K | 0.1uF 16V | [M] |
| C3166 | ECJ1VB1C104K | 0.1uF 16V | [M] |
| C3167 | ECJ1VB1H103K | 0.01uF 50V | [M] |
| C3191 | ECJ1VC1H100D | 10pF 50V | [M] |
| C3201 | ECJ1VB1H102K | 1000pF 50V | [M] |
| C3202 | ECJ1VB1H102K | 1000pF 50V | [M] |
| C3209 | ECJ1VB1C104K | 0.1uF 16V | [M] |
| C3213 | ECJ1VB0J105K | 1uF 6.3V | [M] |
| C3214 | ECJ2FB0J106K | 10uF 6.3V | [M] |
| C3221 | ECJ1VB1C104K | 0.1uF 16V | [M] |
| C3225 | ECJ2FB0J106K | 10uF 6.3V | [M] |
| C3229 | ECJ1VB1H103K | 0.01uF 50V | [M] |
| C3233 | ECJ1VB1C104K | 0.1uF 16V | [M] |
| C3237 | ECJ2FB0J106K | 10uF 6.3V | [M] |
| C3241 | ECJ1VB1C104K | 0.1uF 16V | [M] |
| C3401 | ECJ1VB1C104K | 0.1uF 16V | [M] |
| C3402 | ECJ1VB0J105K | 1uF 6.3V | [M] |
| C3403 | ECJ1VB0J105K | 1uF 6.3V | [M] |
| C3404 | ECJ1VB0J105K | 1uF 6.3V | [M] |
| C3405 | ECJ1VC1H180J | 18pF 50V | [M] |
| C3406 | ECJ1VC1H120J | 12pF 50V | [M] |
| C3407 | ECJ1VC1H180J | 18pF 50V | [M] |
| C3408 | ECJ1VC1H180J | 18pF 50V | [M] |
| C3409 | ECJ1VC1H100D | 10pF 50V | [M] |
| C3410 | ECJ1VB0J105K | 1uF 6.3V | [M] |
| C3411 | ECJ1VC1H101J | 100pF 50V | [M] |
| C3412 | ECJ1VC1H101J | 100pF 50V | [M] |
| C3413 | ECJ1VC1H101J | 100pF 50V | [M] |
| C3414 | ECJ1VC1H101J | 100pF 50V | [M] |
| C3415 | ECJ1VB1C104K | 0.1uF 16V | [M] |
| C3416 | ECJ1VB1A474K | 0.47uF 10V | [M] |
| C3418 | ECJ1VC1H220J | 22pF 50V | [M] |
| C3420 | EEEFK1C220R | 22uF 16V | [M] |
| C3426 | ECJ1VB0J105K | 1uF 6.3V | [M] |
| C3427 | ECJ1VC1H100D | 10pF 50V | [M] |
| C3428 | ECJ1VC1H100D | 10pF 50V | [M] |
| C3429 | ECJ1VC1H100D | 10pF 50V | [M] |
| C3430 | ECJ1VB0J105K | 1uF 6.3V | [M] |
| C3431 | EEEFK1C220R | 22uF 16V | [M] |
| C3432 | EEEFK1C220R | 22uF 16V | [M] |
| C3433 | ECJ1VC1H100D | 10pF 50V | [M] |
| C3501 | ECJ1VB1C104K | 0.1uF 16V | [M] |
| C3502 | EEE0JA470SR | 47uF 6.3V | [M] |
| C3503 | ECJ1VB1C104K | 0.1uF 16V | [M] |
| C3504 | F2G0J101A066 | 100uF 6.3V | [M] |
| C3505 | ECJ1VB1C104K | 0.1uF 16V | [M] |
| C3506 | ECJ1VB1H103K | 0.01uF 50V | [M] |
| C3507 | ECJ1VB1C104K | 0.1uF 16V | [M] |
| C3508 | EEEFK1C220R | 22uF 16V | [M] |
| C3551 | ECJ1VB1C104K | 0.1uF 16V | [M] |
| C3601 | ECJ1VB1C104K | 0.1uF 16V | [M] |
| C3602 | F1L1C226A007 | 22uF 16V | [M] |
| C3603 | ECJ1VB1C104K | 0.1uF 16V | [M] |
| C3604 | ECJ1VC1H150J | 15pF 50V | [M] |
| C3605 | ECJ1VB1C104K | 0.1uF 16V | [M] |
| C3606 | ECJ1VB1C104K | 0.1uF 16V | [M] |
| C3607 | ECJ1VB1C104K | 0.1uF 16V | [M] |
| C3608 | ECJ1VB1C104K | 0.1uF 16V | [M] |
| C3609 | F2G0J221A031 | 220uF 6.3V | [M] |
| C3610 | F1J0J106A014 | 10uF 6.3V | [M] |
| C3611 | ECJ1VC1H471J | 470pF 50V | [M] |
| C3612 | ECJ1VB0J105K | 1uF 6.3V | [M] |
| C3613 | F2G0J101A066 | 100uF 6.3V | [M] |
| C3614 | F1L1C226A007 | 22uF 16V | [M] |
| C3615 | ECJ1VB1C104K | 0.1uF 16V | [M] |
| C3616 | EEEFK0J102P | 1000 6.3V | [M] |
| C4001 | ECJ1VC1H101J | 100pF 50V | [M] |
| C4002 | ECJ1VC1H101J | 100pF 50V | [M] |
| C4003 | ECJ1VC1H101J | 100pF 50V | [M] |
| C4004 | ECJ1VC1H101J | 100pF 50V | [M] |
| C4005 | ECJ1VC1H101J | 100pF 50V | [M] |

| Ref. No. | Part No. | Part Name & Description | Remarks |
|---|---|---|---|
| C4006 | ECJ1VC1H101J | 100pF 50V | [M] |
| C4007 | ECJ1VC1H101J | 100pF 50V | [M] |
| C4008 | ECJ1VC1H101J | 100pF 50V | [M] |
| C4009 | ECJ1VC1H101J | 100pF 50V | [M] |
| C4010 | ECJ1VC1H101J | 100pF 50V | [M] |
| C4011 | ECJ1VC1H101J | 100pF 50V | [M] |
| C4012 | ECJ1VC1H101J | 100pF 50V | [M] |
| C4013 | ECJ1VC1H101J | 100pF 50V | [M] |
| C4014 | ECJ1VC1H101J | 100pF 50V | [M] |
| C4015 | ECJ1VC1H101J | 100pF 50V | [M] |
| C4016 | ECJ1VC1H101J | 100pF 50V | [M] |
| C4017 | ECJ1VC1H101J | 100pF 50V | [M] |
| C4018 | ECJ1VC1H101J | 100pF 50V | [M] |
| C4019 | ECJ1VC1H101J | 100pF 50V | [M] |
| C4020 | ECJ1VC1H101J | 100pF 50V | [M] |
| C4021 | ECJ1VC1H101J | 100pF 50V | [M] |
| C4022 | ECJ1VC1H101J | 100pF 50V | [M] |
| C4023 | ECJ1VC1H101J | 100pF 50V | [M] |
| C4024 | ECJ1VC1H101J | 100pF 50V | [M] |
| C4025 | ECJ1VC1H101J | 100pF 50V | [M] |
| C4026 | ECJ1VC1H101J | 100pF 50V | [M] |
| C4027 | ECJ1VC1H101J | 100pF 50V | [M] |
| C4028 | ECJ1VC1H101J | 100pF 50V | [M] |
| C4029 | ECJ1VC1H101J | 100pF 50V | [M] |
| C4030 | ECJ1VC1H101J | 100pF 50V | [M] |
| C4031 | ECJ1VC1H101J | 100pF 50V | [M] |
| C4032 | ECJ1VC1H101J | 100pF 50V | [M] |
| C4033 | ECJ1VC1H101J | 100pF 50V | [M] |
| C4034 | ECJ1VC1H101J | 100pF 50V | [M] |
| C4035 | ECJ1VC1H101J | 100pF 50V | [M] |
| C4036 | ECJ1VC1H101J | 100pF 50V | [M] |
| C4037 | ECJ1VC1H101J | 100pF 50V | [M] |
| C4038 | ECJ1VC1H101J | 100pF 50V | [M] |
| C4039 | ECJ1VC1H101J | 100pF 50V | [M] |
| C4040 | ECJ1VC1H101J | 100pF 50V | [M] |
| C4041 | ECJ1VC1H101J | 100pF 50V | [M] |
| C4042 | ECJ1VC1H101J | 100pF 50V | [M] |
| C4043 | ECJ1VC1H101J | 100pF 50V | [M] |
| C4044 | ECJ1VC1H101J | 100pF 50V | [M] |
| C4045 | ECJ1VB1H331K | 330pF 50V | [M] |
| C4051 | F2A1H4R7A234 | 4.7uF 50V | [M] |
| C4052 | F2A1H4R7A234 | 4.7uF 50V | [M] |
| C4053 | F2A1H4R7A234 | 4.7uF 50V | [M] |
| C4054 | F2A1H4R7A234 | 4.7uF 50V | [M] |
| C4055 | ECJ2FB1A475K | 4.7uF 10V | [M] |
| C4056 | ECJ2FB1A475K | 4.7uF 10V | [M] |
| C4057 | ECJ2FB1A475K | 4.7uF 10V | [M] |
| C4058 | ECJ2FB1A475K | 4.7uF 10V | [M] |
| C4059 | ECJ2FB1A475K | 4.7uF 10V | [M] |
| C4060 | ECJ2FB1A475K | 4.7uF 10V | [M] |
| C4061 | F2A1H4R7A234 | 4.7uF 50V | [M] |
| C4062 | F2A1H4R7A234 | 4.7uF 50V | [M] |
| C4063 | ECA1CAK100XB | 10uF 16V | [M] |
| C4064 | ECA1CAK100XB | 10uF 16V | [M] |
| C4065 | F2A1H4R7A234 | 4.7uF 50V | [M] |
| C4066 | F2A1H4R7A234 | 4.7uF 50V | [M] |
| C4067 | F2A1H4R7A234 | 4.7uF 50V | [M] |
| C4068 | F2A1H4R7A234 | 4.7uF 50V | [M] |
| C4069 | F2A1H4R7A234 | 4.7uF 50V | [M] |
| C4070 | F2A1H4R7A234 | 4.7uF 50V | [M] |
| C4071 | F2A1H4R7A234 | 4.7uF 50V | [M] |
| C4072 | F2A1H4R7A234 | 4.7uF 50V | [M] |
| C4073 | F2A1H4R7A234 | 4.7uF 50V | [M] |
| C4074 | F2A1H4R7A234 | 4.7uF 50V | [M] |
| C4075 | F2A1H4R7A234 | 4.7uF 50V | [M] |
| C4076 | F2A1H4R7A234 | 4.7uF 50V | [M] |
| C4077 | F2A1H4R7A234 | 4.7uF 50V | [M] |
| C4078 | F2A1H4R7A234 | 4.7uF 50V | [M] |
| C4079 | ECJ2FB1A475K | 4.7uF 10V | [M] |
| C4080 | ECJ2FB1A475K | 4.7uF 10V | [M] |
| C4081 | ECJ2FB1A475K | 4.7uF 10V | [M] |
| C4082 | F2A1H4R7A234 | 4.7uF 50V | [M] |
| C4083 | F2A1H4R7A234 | 4.7uF 50V | [M] |

| Ref. No. | Part No. | Part Name & Description | Remarks |
|---|---|---|---|
| C4084 | F2A1H4R7A234 | 4.7uF 50V | [M] |
| C4085 | F2A1H4R7A234 | 4.7uF 50V | [M] |
| C4086 | F2A1H4R7A234 | 4.7uF 50V | [M] |
| C4087 | F2A1H4R7A234 | 4.7uF 50V | [M] |
| C4088 | F2A1H4R7A234 | 4.7uF 50V | [M] |
| C4089 | F2A1H4R7A234 | 4.7uF 50V | [M] |
| C4091 | ECA1CAK101XB | 100uF 16V | [M] |
| C4092 | ECA1CAK101XB | 100uF 16V | [M] |
| C4093 | ECJ1VB1H103K | 0.01uF 50V | [M] |
| C4094 | ECJ1VB1H103K | 0.01uF 50V | [M] |
| C4095 | ECJ1VC1H101J | 100pF 50V | [M] |
| C4096 | ECJ1VC1H101J | 100pF 50V | [M] |
| C4101 | ECJ1VC1H101J | 100pF 50V | [M] |
| C4102 | ECJ1VC1H101J | 100pF 50V | [M] |
| C4103 | ECA1CAK100XB | 10uF 16V | [M] |
| C4104 | ECA1CAK100XB | 10uF 16V | [M] |
| C4105 | ECJ1VB1H331K | 330pF 50V | [M] |
| C4106 | ECJ1VB1H331K | 330pF 50V | [M] |
| C4107 | ECJ1VB1H331K | 330pF 50V | [M] |
| C4108 | ECJ1VB1H331K | 330pF 50V | [M] |
| C4109 | ECJ1VC1H101J | 100pF 50V | [M] |
| C4110 | ECJ1VC1H101J | 100pF 50V | [M] |
| C4111 | ECJ1VB1H104K | 0.1uF 50V | [M] |
| C4112 | ECJ1VB1H104K | 0.1uF 50V | [M] |
| C4113 | ECJ1VC1H101J | 100pF 50V | [M] |
| C4114 | ECJ1VC1H101J | 100pF 50V | [M] |
| C4115 | ECA1EAK100XB | 10uF 25V | [M] |
| C4116 | ECA1EAK100XB | 10uF 25V | [M] |
| C4117 | ECJ1VB1H331K | 330pF 50V | [M] |
| C4118 | ECJ1VB1H331K | 330pF 50V | [M] |
| C4119 | ECJ1VB1H331K | 330pF 50V | [M] |
| C4120 | ECJ1VB1H331K | 330pF 50V | [M] |
| C4121 | ECJ1VC1H101J | 100pF 50V | [M] |
| C4122 | ECJ1VC1H101J | 100pF 50V | [M] |
| C4123 | ECJ1VB1H104K | 0.1uF 50V | [M] |
| C4124 | ECJ1VB1H104K | 0.1uF 50V | [M] |
| C4125 | ECJ1VC1H101J | 100pF 50V | [M] |
| C4126 | ECJ1VC1H101J | 100pF 50V | [M] |
| C4127 | ECA1EAK100XB | 10uF 25V | [M] |
| C4128 | ECA1EAK100XB | 10uF 25V | [M] |
| C4129 | ECJ1VB1H331K | 330pF 50V | [M] |
| C4130 | ECJ1VB1H331K | 330pF 50V | [M] |
| C4131 | ECJ1VB1H331K | 330pF 50V | [M] |
| C4132 | ECJ1VB1H331K | 330pF 50V | [M] |
| C4133 | ECJ1VC1H101J | 100pF 50V | [M] |
| C4134 | ECJ1VC1H101J | 100pF 50V | [M] |
| C4135 | ECJ1VB1H104K | 0.1uF 50V | [M] |
| C4136 | ECJ1VB1H104K | 0.1uF 50V | [M] |
| C4137 | ECJ1VC1H101J | 100pF 50V | [M] |
| C4138 | ECJ1VC1H101J | 100pF 50V | [M] |
| C4139 | ECA1EAK100XB | 10uF 25V | [M] |
| C4140 | ECA1EAK100XB | 10uF 25V | [M] |
| C4141 | ECJ1VB1H331K | 330pF 50V | [M] |
| C4142 | ECJ1VB1H331K | 330pF 50V | [M] |
| C4143 | ECJ1VB1H331K | 330pF 50V | [M] |
| C4144 | ECJ1VB1H331K | 330pF 50V | [M] |
| C4145 | ECJ1VC1H101J | 100pF 50V | [M] |
| C4146 | ECJ1VC1H101J | 100pF 50V | [M] |
| C4147 | ECJ1VB1H104K | 0.1uF 50V | [M] |
| C4148 | ECJ1VB1H104K | 0.1uF 50V | [M] |
| C4151 | ECA1EAK100XB | 10uF 25V | [M] |
| C4152 | ECA1EAK100XB | 10uF 25V | [M] |
| C4153 | ECA1EAK100XB | 10uF 25V | [M] |
| C4154 | ECA1EAK100XB | 10uF 25V | [M] |
| C4155 | ECA1EAK100XB | 10uF 25V | [M] |
| C4156 | ECA1EAK100XB | 10uF 25V | [M] |
| C4157 | ECA1EAK100XB | 10uF 25V | [M] |
| C4158 | ECA1EAK100XB | 10uF 25V | [M] |
| C4161 | ECJ1VC1H101J | 100pF 50V | [M] |
| C4162 | ECJ1VC1H101J | 100pF 50V | [M] |
| C4163 | ECJ1VB1H331K | 330pF 50V | [M] |
| C4164 | ECJ1VB1H331K | 330pF 50V | [M] |
| C4165 | ECA1EAK100XB | 10uF 25V | [M] |

| Ref. No. | Part No. | Part Name & Description | Remarks |
|---|---|---|---|
| C4166 | ECA1EAK100XB | 10uF 25V | [M] |
| C4167 | ECJ1VB1H104K | 0.1uF 50V | [M] |
| C4168 | ECJ1VB1H104K | 0.1uF 50V | [M] |
| C4169 | ECJ1VC1H101J | 100pF 50V | [M] |
| C4170 | ECJ1VC1H101J | 100pF 50V | [M] |
| C4171 | ECJ1VB1H331K | 330pF 50V | [M] |
| C4172 | ECJ1VB1H331K | 330pF 50V | [M] |
| C4173 | ECA1EAK100XB | 10uF 25V | [M] |
| C4174 | ECA1EAK100XB | 10uF 25V | [M] |
| C4175 | ECJ1VB1H104K | 0.1uF 50V | [M] |
| C4176 | ECJ1VB1H104K | 0.1uF 50V | [M] |
| C4183 | ECJ1VC1H101J | 100pF 50V | [M] |
| C4184 | ECJ1VC1H101J | 100pF 50V | [M] |
| C4185 | ECJ1VB1H331K | 330pF 50V | [M] |
| C4186 | ECJ1VB1H331K | 330pF 50V | [M] |
| C4187 | ECA1EAK100XB | 10uF 25V | [M] |
| C4188 | ECA1EAK100XB | 10uF 25V | [M] |
| C4189 | ECJ1VB1H104K | 0.1uF 50V | [M] |
| C4190 | ECJ1VB1H104K | 0.1uF 50V | [M] |
| C4191 | ECJ1VC1H101J | 100pF 50V | [M] |
| C4192 | ECJ1VC1H101J | 100pF 50V | [M] |
| C4193 | ECJ1VB1H331K | 330pF 50V | [M] |
| C4194 | ECJ1VB1H331K | 330pF 50V | [M] |
| C4195 | ECA1EAK100XB | 10uF 25V | [M] |
| C4196 | ECA1EAK100XB | 10uF 25V | [M] |
| C4197 | ECJ1VB1H104K | 0.1uF 50V | [M] |
| C4198 | ECJ1VB1H104K | 0.1uF 50V | [M] |
| C4199 | ECA1CAK101XB | 100uF 16V | [M] |
| C4200 | ECA1CAK101XB | 100uF 16V | [M] |
| C4201 | ECJ1VB1H104K | 0.1uF 50V | [M] |
| C4202 | ECJ1VB1H104K | 0.1uF 50V | [M] |
| C4203 | ECJ1VB1H104K | 0.1uF 50V | [M] |
| C4204 | ECJ1VB1H104K | 0.1uF 50V | [M] |
| C4238 | ECJ1VB1H104K | 0.1uF 50V | [M] |
| C4241 | ECJ1VB1H104K | 0.1uF 50V | [M] |
| C4242 | ECJ1VB1H104K | 0.1uF 50V | [M] |
| C4250 | ECJ1VC1H220J | 22pF 50V | [M] |
| C4251 | ECJ1VB1H104K | 0.1uF 50V | [M] |
| C4252 | ECJ1VB1H104K | 0.1uF 50V | [M] |
| C4253 | ECA0JAK101XB | 100uF 6.3V | [M] |
| C4254 | ECA1AAK330XB | 33uF 10V | [M] |
| C4261 | ECA1EAK100XB | 10uF 25V | [M] |
| C4262 | ECA1EAK100XB | 10uF 25V | [M] |
| C4263 | ECA1EAK100XB | 10uF 25V | [M] |
| C4264 | ECA1EAK100XB | 10uF 25V | [M] |
| C4265 | ECJ1VB1H104K | 0.1uF 50V | [M] |
| C4266 | ECA0JAK101XB | 100uF 6.3V | [M] |
| C4301 | ECJ1VB1C105K | 1uF 16V | [M] |
| C4302 | ECJ1VB1C105K | 1uF 16V | [M] |
| C4303 | ECJ1VC1H101J | 100pF 50V | [M] |
| C4304 | ECJ1VC1H101J | 100pF 50V | [M] |
| C4305 | ECJ1VB1H102K | 1000pF 50V | [M] |
| C4306 | ECJ1VB1H102K | 1000pF 50V | [M] |
| C4307 | ECJ1VC1H101J | 100pF 50V | [M] |
| C4308 | ECJ1VC1H101J | 100pF 50V | [M] |
| C4309 | F2A1C470A234 | 47uF 16V | [M] |
| C4310 | F2A1C470A234 | 47uF 16V | [M] |
| C4311 | ECJ1VB1H104K | 0.1uF 50V | [M] |
| C4312 | ECJ1VB1H104K | 0.1uF 50V | [M] |
| C4313 | ECJ1VB1H103K | 0.01uF 50V | [M] |
| C4314 | ECJ1VB1H103K | 0.01uF 50V | [M] |
| C4331 | ECJ1VB1C105K | 1uF 16V | [M] |
| C4332 | ECJ1VB1C105K | 1uF 16V | [M] |
| C4333 | ECJ1VC1H101J | 100pF 50V | [M] |
| C4334 | ECJ1VC1H101J | 100pF 50V | [M] |
| C4335 | ECJ1VB1H102K | 1000pF 50V | [M] |
| C4336 | ECJ1VB1H102K | 1000pF 50V | [M] |
| C4337 | ECJ1VC1H101J | 100pF 50V | [M] |
| C4338 | ECJ1VC1H101J | 100pF 50V | [M] |
| C4339 | F1K1E106A078 | 10uF 25V | [M] |
| C4340 | F1K1E106A078 | 10uF 25V | [M] |
| C4341 | ECJ1VB1H104K | 0.1uF 50V | [M] |
| C4342 | ECJ1VB1H104K | 0.1uF 50V | [M] |

| Ref. No. | Part No. | Part Name & Description | Remarks |
|---|---|---|---|
| C4343 | ECJ1VB1H104K | 0.1uF 50V | [M] |
| C4344 | ECJ1VB1H104K | 0.1uF 50V | [M] |
| C4351 | ECJ1VB1C105K | 1uF 16V | [M] |
| C4352 | ECJ1VB1C105K | 1uF 16V | [M] |
| C4353 | ECJ1VC1H101J | 100pF 50V | [M] |
| C4354 | ECJ1VC1H101J | 100pF 50V | [M] |
| C4355 | ECJ1VB1H102K | 1000pF 50V | [M] |
| C4356 | ECJ1VB1H102K | 1000pF 50V | [M] |
| C4357 | ECJ1VC1H101J | 100pF 50V | [M] |
| C4358 | ECJ1VC1H101J | 100pF 50V | [M] |
| C4359 | F1K1E106A078 | 10uF 25V | [M] |
| C4360 | F1K1E106A078 | 10uF 25V | [M] |
| C4361 | ECJ1VB1H104K | 0.1uF 50V | [M] |
| C4362 | ECJ1VB1H104K | 0.1uF 50V | [M] |
| C4371 | ECJ1VB1C105K | 1uF 16V | [M] |
| C4372 | ECJ1VC1H220J | 22pF 50V | [M] |
| C4373 | ECJ1VB1H104K | 0.1uF 50V | [M] |
| C4374 | ECJ1VB1C105K | 1uF 16V | [M] |
| C4375 | ECJ1VB1H104K | 0.1uF 50V | [M] |
| C4376 | ECJ1VB1H104K | 0.1uF 50V | [M] |
| C4377 | ECJ1VC1H220J | 22pF 50V | [M] |
| C4378 | F2A0J470A245 | 47uF 6.3V | [M] |
| C4401 | ECJ1VB1H104K | 0.1uF 50V | [M] |
| C4402 | ECJ1VB1H104K | 0.1uF 50V | [M] |
| C4403 | ECJ1VB1H104K | 0.1uF 50V | [M] |
| C4404 | ECJ1VB1H104K | 0.1uF 50V | [M] |
| C4405 | ECJ1VB1H104K | 0.1uF 50V | [M] |
| C4407 | ECJ1VB1H104K | 0.1uF 50V | [M] |
| C4408 | ECJ1VB1H104K | 0.1uF 50V | [M] |
| C4409 | ECA0JAK470XB | 47uF 6.3V | [M] |
| C4410 | ECJ1VB1H104K | 0.1uF 50V | [M] |
| C4431 | ECJ1VB1C105K | 1uF 16V | [M] |
| C4432 | ECJ1VB1C105K | 1uF 16V | [M] |
| C4433 | ECJ1VC1H101J | 100pF 50V | [M] |
| C4434 | ECJ1VC1H101J | 100pF 50V | [M] |
| C4435 | ECJ1VB1H102K | 1000pF 50V | [M] |
| C4436 | ECJ1VB1H102K | 1000pF 50V | [M] |
| C4437 | ECJ1VC1H101J | 100pF 50V | [M] |
| C4438 | ECJ1VC1H101J | 100pF 50V | [M] |
| C4439 | F1K1E106A078 | 10uF 25V | [M] |
| C4440 | F1K1E106A078 | 10uF 25V | [M] |
| C4441 | ECJ1VB1H104K | 0.1uF 50V | [M] |
| C4442 | ECJ1VB1H104K | 0.1uF 50V | [M] |
| C4601 | ECJ1VB1H102K | 1000pF 50V | [M] |
| C4602 | ECJ1VB1H102K | 1000pF 50V | [M] |
| C4603 | ECJ1VB1H102K | 1000pF 50V | [M] |
| C4604 | ECJ1VB1H102K | 1000pF 50V | [M] |
| C4605 | ECJ1VB1H102K | 1000pF 50V | [M] |
| C4606 | ECJ1VB1H102K | 1000pF 50V | [M] |
| C4607 | ECJ1VB1H102K | 1000pF 50V | [M] |
| C4608 | ECJ1VB1H102K | 1000pF 50V | [M] |
| C4609 | ECJ1VB1H102K | 1000pF 50V | [M] |
| C4610 | ECJ1VB1H102K | 1000pF 50V | [M] |
| C4611 | ECJ1VB1H102K | 1000pF 50V | [M] |
| C4612 | ECJ1VB1H102K | 1000pF 50V | [M] |
| C4613 | ECJ1VB1H102K | 1000pF 50V | [M] |
| C4614 | ECJ1VB1H102K | 1000pF 50V | [M] |
| C4615 | ECJ1VB1H102K | 1000pF 50V | [M] |
| C4616 | ECJ1VB1H102K | 1000pF 50V | [M] |
| C4617 | ECJ1VB1H102K | 1000pF 50V | [M] |
| C4618 | ECJ1VB1H102K | 1000pF 50V | [M] |
| C5000 | ECJ1VB1H102K | 1000pF 50V | [M] |
| C5001 | ECJ1VB1H102K | 1000pF 50V | [M] |
| C5002 | F1H1A474A001 | 0.47uF 10V | [M] |
| C5003 | F1H1A474A001 | 0.47uF 10V | [M] |
| C5004 | F1H1A474A001 | 0.47uF 10V | [M] |
| C5005 | F1H1A474A001 | 0.47uF 10V | [M] |
| C5006 | ECJ1VC1H470J | 47pF 50V | [M] |
| C5007 | ECJ1VC1H470J | 47pF 50V | [M] |
| C5008 | ECJ1VB1H153K | 0.015uF 50V | [M] |
| C5009 | ECJ1VB1H153K | 0.015uF 50V | [M] |
| C5010 | F1H2A221A009 | 220pF 100V | [M] |
| C5011 | F1H2A221A009 | 220pF 100V | [M] |

| Ref. No. | Part No. | Part Name & Description | Remarks |
|---|---|---|---|
| C5012 | F1H2A221A009 | 220pF 100V | [M] |
| C5013 | F1H2A221A009 | 220pF 100V | [M] |
| C5014 | F0C1H8240001 | 0.82uF 50V | [M] |
| C5015 | F0C1H8240001 | 0.82uF 50V | [M] |
| C5016 | ECJ1VB1H104K | 0.1uF 50V | [M] |
| C5017 | ECJ1VB1H104K | 0.1uF 50V | [M] |
| C5018 | F1K2A1040007 | 0.1uF 100V | [M] |
| C5019 | ECJ1VB1H104K | 0.1uF 50V | [M] |
| C5020 | ECJ1VB1H104K | 0.1uF 50V | [M] |
| C5021 | ECJ1VB1H104K | 0.1uF 50V | [M] |
| C5022 | ECJ1VB1H104K | 0.1uF 50V | [M] |
| C5023 | F1K2A1040007 | 0.1uF 100V | [M] |
| C5024 | ECJ1VB1H104K | 0.1uF 50V | [M] |
| C5025 | ECJ1VB1H104K | 0.1uF 50V | [M] |
| C5027 | ECJ1VB1H104K | 0.1uF 50V | [M] |
| C5028 | ECJ1VB1H104K | 0.1uF 50V | [M] |
| C5030 | ECJ1VC1H221J | 220pF 50V | [M] |
| C5031 | ECJ1VB1C224K | 0.22uF 16V | [M] |
| C5032 | ECJ1VB1H102K | 1000pF 50V | [M] |
| C5033 | ECJ1VB1H104K | 0.1uF 50V | [M] |
| C5040 | F2A2A2200035 | 22uF 100V | [M] |
| C5106 | F1H1A474A001 | 0.47uF 10V | [M] |
| C5107 | F1H1A474A001 | 0.47uF 10V | [M] |
| C5117 | ECJ1VB1H102K | 1000pF 50V | [M] |
| C5119 | ECJ1VB1H102K | 1000pF 50V | [M] |
| C5120 | F1H1A474A001 | 0.47uF 10V | [M] |
| C5121 | F1H1A474A001 | 0.47uF 10V | [M] |
| C5133 | F2A0J101A245 | 100uF 6.3V | [M] |
| C5150 | ECJ1VC1H470J | 47pF 50V | [M] |
| C5151 | ECJ1VC1H470J | 47pF 50V | [M] |
| C5152 | ECJ1VC1H470J | 47pF 50V | [M] |
| C5155 | ECJ1VC1H470J | 47pF 50V | [M] |
| C5200 | ECJ1VB1H104K | 0.1uF 50V | [M] |
| C5201 | ECJ1VB1H153K | 0.015uF 50V | [M] |
| C5202 | ECJ1VB1C224K | 0.22uF 16V | [M] |
| C5203 | F1H2A221A009 | 220pF 100V | [M] |
| C5204 | ECJ1VB1H153K | 0.015uF 50V | [M] |
| C5205 | F1H2A221A009 | 220pF 100V | [M] |
| C5206 | ECJ1VB1H104K | 0.1uF 50V | [M] |
| C5207 | F1K2A1040007 | 0.1uF 100V | [M] |
| C5208 | ECJ1VB1H104K | 0.1uF 50V | [M] |
| C5209 | ECJ1VB1H104K | 0.1uF 50V | [M] |
| C5211 | F1H2A221A009 | 220pF 100V | [M] |
| C5212 | ECJ1VC1H221J | 220pF 50V | [M] |
| C5213 | ECJ1VB1H104K | 0.1uF 50V | [M] |
| C5214 | ECJ1VB1H104K | 0.1uF 50V | [M] |
| C5216 | ECJ1VC1H470J | 47pF 50V | [M] |
| C5217 | ECJ1VB1H104K | 0.1uF 50V | [M] |
| C5218 | F1H2A221A009 | 220pF 100V | [M] |
| C5219 | F1K2A1040007 | 0.1uF 100V | [M] |
| C5220 | ECJ1VB1H104K | 0.1uF 50V | [M] |
| C5221 | ECJ1VB1H102K | 1000pF 50V | [M] |
| C5222 | F1H1A474A001 | 0.47uF 10V | [M] |
| C5223 | F1H1A474A001 | 0.47uF 10V | [M] |
| C5224 | ECJ1VC1H470J | 47pF 50V | [M] |
| C5225 | F0C1H8240001 | 0.82uF 50V | [M] |
| C5226 | ECJ1VB1H104K | 0.1uF 50V | [M] |
| C5227 | ECJ1VB1H104K | 0.1uF 50V | [M] |
| C5228 | F0C1H8240001 | 0.82uF 50V | [M] |
| C5231 | ECJ1VB1H102K | 1000pF 50V | [M] |
| C5232 | F1H1A474A001 | 0.47uF 10V | [M] |
| C5233 | F1H1A474A001 | 0.47uF 10V | [M] |
| C5234 | ECJ1VB1H102K | 1000pF 50V | [M] |
| C5240 | F2A2A2200035 | 22uF 100V | [M] |
| C5300 | F0C1H8240001 | 0.82uF 50V | [M] |
| C5301 | ECJ1VB1H104K | 0.1uF 50V | [M] |
| C5302 | ECJ1VB1H104K | 0.1uF 50V | [M] |
| C5303 | ECJ1VB1H104K | 0.1uF 50V | [M] |
| C5304 | ECJ1VB1H331K | 330pF 50V | [M] EB/EG |
| C5304 | ECJ1VC1H470J | 47pF 50V | [M] EE |
| C5305 | ECJ1VB1H104K | 0.1uF 50V | [M] |
| C5306 | ECJ1VB1H104K | 0.1uF 50V | [M] |

| Ref. No. | Part No. | Part Name & Description | Remarks |
|---|---|---|---|
| C5307 | F1H2A221A009 | 220pF 100V | [M] |
| C5309 | ECJ1VB1H104K | 0.1uF 50V | [M] |
| C5310 | ECJ3YB2A104K | 0.1uF 100V | [M] |
| C5311 | F1H2A221A009 | 220pF 100V | [M] |
| C5312 | ECJ1VB1H331K | 330pF 50V | [M] EB/EG |
| C5312 | ECJ1VC1H470J | 47pF 50V | [M] EE |
| C5313 | ECJ1VB1H104K | 0.1uF 50V | [M] |
| C5314 | F1H1A474A001 | 0.47uF 10V | [M] |
| C5315 | ECJ1VB1H102K | 1000pF 50V | [M] |
| C5316 | ECJ1VB1H104K | 0.1uF 50V | [M] |
| C5317 | F1H1A474A001 | 0.47uF 10V | [M] |
| C5318 | ECJ1VB1H104K | 0.1uF 50V | [M] |
| C5319 | ECJ3YB2A104K | 0.1uF 100V | [M] |
| C5321 | ECJ1VB1C224K | 0.22uF 16V | [M] |
| C5322 | ECJ1VB1H153K | 0.015uF 50V | [M] |
| C5323 | ECJ1VC1H221J | 220pF 50V | [M] |
| C5324 | ECJ1VB1H153K | 0.015uF 50V | [M] |
| C5325 | F1H2A221A009 | 220pF 100V | [M] |
| C5326 | F1H2A221A009 | 220pF 100V | [M] |
| C5327 | ECJ1VB1H104K | 0.1uF 50V | [M] |
| C5328 | F0C1H8240001 | 0.82uF 50V | [M] |
| C5331 | ECJ1VB1H102K | 1000pF 50V | [M] |
| C5332 | F1H1A474A001 | 0.47uF 10V | [M] |
| C5333 | ECJ1VB1H102K | 1000pF 50V | [M] |
| C5334 | F1H1A474A001 | 0.47uF 10V | [M] |
| C5400 | F0C1H8240001 | 0.82uF 50V | [M] |
| C5401 | ECJ1VB1H104K | 0.1uF 50V | [M] |
| C5402 | ECJ1VB1H104K | 0.1uF 50V | [M] |
| C5403 | ECJ1VB1H104K | 0.1uF 50V | [M] |
| C5404 | ECJ1VC1H470J | 47pF 50V | [M] |
| C5405 | ECJ1VB1H104K | 0.1uF 50V | [M] |
| C5406 | ECJ1VB1H104K | 0.1uF 50V | [M] |
| C5407 | F1H2A221A009 | 220pF 100V | [M] |
| C5409 | ECJ1VB1H104K | 0.1uF 50V | [M] |
| C5410 | F1K2A1040007 | 0.1uF 100V | [M] |
| C5411 | F1H2A221A009 | 220pF 100V | [M] |
| C5412 | ECJ1VC1H470J | 47pF 50V | [M] |
| C5413 | ECJ1VB1H104K | 0.1uF 50V | [M] |
| C5416 | ECJ1VB1H104K | 0.1uF 50V | [M] |
| C5418 | ECJ1VB1H104K | 0.1uF 50V | [M] |
| C5419 | F1K2A1040007 | 0.1uF 100V | [M] |
| C5421 | ECJ1VB1C224K | 0.22uF 16V | [M] |
| C5422 | ECJ1VB1H153K | 0.015uF 50V | [M] |
| C5423 | ECJ1VC1H221J | 220pF 50V | [M] |
| C5424 | ECJ1VB1H153K | 0.015uF 50V | [M] |
| C5425 | F1H2A221A009 | 220pF 100V | [M] |
| C5426 | F1H2A221A009 | 220pF 100V | [M] |
| C5427 | ECJ1VB1H104K | 0.1uF 50V | [M] |
| C5428 | F0C1H8240001 | 0.82uF 50V | [M] |
| C5431 | ECJ1VB1H102K | 1000pF 50V | [M] |
| C5440 | F2A2A2200035 | 22uF 100V | [M] |
| C5445 | ECJ1VB1H104K | 0.1uF 50V | [M] |
| C5508 | F2A1V4710074 | 470uF 35V | [M] |
| C5509 | F2A1V4710074 | 470uF 35V | [M] |
| C5510 | F2A1V4710074 | 470uF 35V | [M] |
| C5511 | F2A1V4710074 | 470uF 35V | [M] |
| C5512 | F2A1V4710074 | 470uF 35V | [M] |
| C5513 | F2A1V4710074 | 470uF 35V | [M] |
| C5514 | ECJ1VB1H104K | 0.1uF 50V | [M] |
| C5515 | ECJ1VB1H104K | 0.1uF 50V | [M] |
| C5516 | F2A1V4710074 | 470uF 35V | [M] |
| C5517 | F2A1V4710074 | 470uF 35V | [M] |
| C5518 | ECJ1VB1H104K | 0.1uF 50V | [M] |
| C5519 | ECJ1VB1H104K | 0.1uF 50V | [M] |
| C5520 | ECJ1VB1H104K | 0.1uF 50V | [M] |
| C5521 | ECJ1VB1H104K | 0.1uF 50V | [M] |
| C5522 | ECJ1VB1H104K | 0.1uF 50V | [M] |
| C5523 | ECJ1VB1H104K | 0.1uF 50V | [M] |
| C5524 | ECJ1VB1H104K | 0.1uF 50V | [M] |
| C5525 | ECJ1VB1H104K | 0.1uF 50V | [M] |
| C5540 | F2A2A2200035 | 22uF 100V | [M] |
| C5550 | ECJ1VB1H103K | 0.01uF 50V | [M] |

| Ref. No. | Part No. | Part Name & Description | Remarks |
|---|---|---|---|
| C5551 | ECJ1VB1H391K | 390pF 50V | [M] |
| C5552 | ECJ1VB1H391K | 390pF 50V | [M] |
| C5553 | ECJ1VC1H101J | 100pF 50V | [M] |
| C5554 | ECJ1VB1H104K | 0.1uF 50V | [M] |
| C5555 | F1K1C1060001 | 10uF 16V | [M] |
| C5556 | ECJ1VB1H103K | 0.01uF 50V | [M] |
| C5557 | ECJ1VC1H221J | 220pF 50V | [M] |
| C5558 | ECJ1VC1H470J | 47pF 50V | [M] |
| C5559 | ECJ1VC1H470J | 47pF 50V | [M] |
| C5560 | ECJ1VB1H104K | 0.1uF 50V | [M] |
| C5601 | ECA1CAK100XB | 10uF 16V | [M] |
| C5602 | F2A1C100A234 | 10uF 16V | [M] |
| C5690 | ECJ1VB1H102K | 1000pF 50V | [M] |
| C5691 | ECA1EAK100XB | 10uF 25V | [M] |
| C5692 | ECA0JAK221XB | 220uF 6.3V | [M] |
| C5693 | ECJ1VB1H104K | 0.1uF 50V | [M] |
| C5694 | ECA1CAK330XB | 33uF 16V | [M] |
| C5695 | ECJ1VB1H104K | 0.1uF 50V | [M] |
| C5696 | ECEA1EKS220B | 22uF 25V | [M] |
| C5697 | ECA1HAK010XB | 1uF 50V | [M] |
| C5700 | F1BAF1020020 | 1000pF | [M] ⚠ |
| C5701 | ECQU2A104MLC | 0.1uF | [M] ⚠ |
| C5702 | ECQU2A104MLC | 0.1uF | [M] ⚠ |
| C5703 | ECQU2A104MLC | 0.1uF | [M] ⚠ |
| C5704 | F1BAF1020020 | 1000pF | [M] ⚠ |
| C5712 | F2A2G1810002 | 180uF 400V | [M] |
| C5713 | F0C2J1030005 | 0.01uF 630V | [M] |
| C5720 | ECJ1VB1H102K | 1000pF 50V | [M] |
| C5721 | ECJ1VB1H221K | 220pF 50V | [M] |
| C5722 | ECJ1VB1H102K | 1000pF 50V | [M] |
| C5723 | ECJ1VB1H471K | 470pF 50V | [M] |
| C5724 | F2A1H2200032 | 22uF 50V | [M] |
| C5725 | ECJ1VB1H104K | 0.1uF 50V | [M] |
| C5726 | ECJ1VB1H104K | 0.1uF 50V | [M] |
| C5727 | ECKE3D821KBP | 820pF 2000V | [M] |
| C5728 | ECJ1VB1H102K | 1000pF 50V | [M] |
| C5730 | ECEA1HKS010B | 1uF 50V | [M] |
| C5790 | ECJ3YB2J222K | 2200pF 630V | [M] |
| C5791 | ECEA1HKA2R2B | 2.2uF 50V | [M] |
| C5794 | ECJ1VC1H220J | 22pF 50V | [M] |
| C5795 | F1J1H473A022 | 0.047uF 50V | [M] |
| C5796 | F1J1H104A717 | 0.1uF 50V | [M] |
| C5797 | F1A3A470A023 | 47pF 1000V | [M] |
| C5798 | F2A1H5600009 | 56uF 50V | [M] |
| C5800 | F1J2E1030004 | 0.01uF 250V | [M] |
| C5805 | F2B1V222A007 | 2200uF 35V | [M] |
| C5808 | F2B1V222A007 | 2200uF 35V | [M] |
| C5810 | ECJ1VB1H104K | 0.1uF 50V | [M] |
| C5812 | ECJ1VB1H104K | 0.1uF 50V | [M] |
| C5813 | F2A1V4710036 | 470uF 35V | [M] |
| C5815 | ECJ1VB1H104K | 0.1uF 50V | [M] |
| C5816 | F2A1E471A652 | 470uF 25V | [M] |
| C5817 | F2A2AR22A358 | 0.22uF 100V | [M] |
| C5818 | ECJ1VB1H104K | 0.1uF 50V | [M] |
| C5819 | F1J2E1030004 | 0.01uF 250V | [M] |
| C5820 | F1J2E1030004 | 0.01uF 250V | [M] |
| C5821 | F1J2E1030004 | 0.01uF 250V | [M] |
| C5822 | F1J2E1030004 | 0.01uF 250V | [M] |
| C5823 | ECJ1VB1H104K | 0.1uF 50V | [M] |
| C5824 | F2A1E471A652 | 470uF 25V | [M] |
| C5825 | ECJ1VB1H104K | 0.1uF 50V | [M] |
| C5826 | F1J2E1030004 | 0.01uF 250V | [M] |
| C5827 | F1J2E1030004 | 0.01uF 250V | [M] |
| C5831 | ECJ1VB1H104K | 0.1uF 50V | [M] |
| C5832 | ECJ1VB1H104K | 0.1uF 50V | [M] |
| C5869 | ECJ1VB1H104K | 0.1uF 50V | [M] |
| C5870 | ECJ1VB1H104K | 0.1uF 50V | [M] |
| C5896 | ECJ1VB1H104K | 0.1uF 50V | [M] |
| C5897 | ECJ1VB1H104K | 0.1uF 50V | [M] |
| C5898 | ECJ1VB1H104K | 0.1uF 50V | [M] |
| C5899 | F2A1C221A104 | 220uF 16V | [M] |
| C5991 | F1H1E105A116 | 1uF 25V | [M] |
| C6301 | ECJ1VB1H102K | 1000pF 50V | [M] |

| Ref. No. | Part No. | Part Name & Description | Remarks |
|---|---|---|---|
| C6302 | ECJ1VB1H102K | 1000pF 50V | [M] |
| C6930 | ECA0JAK101XB | 100uF 6.3V | [M] |
| C7001 | F2A1E1020042 | 1000uF 25V | [M] |
| C7002 | F2A0J222A247 | 2200uF 6.3V | [M] |
| C7003 | ECJ1VB1C105K | 1uF 16V | [M] |
| C7004 | F2A0J221A245 | 220uF 6.3V | [M] |
| C7005 | F2A1V470A654 | 47uF 35V | [M] |
| C7006 | F2A1V330A379 | 33uF 35V | [M] |
| C7007 | F2A1A1010102 | 100uF 10V | [M] |
| C7008 | ECJ1VB1C105K | 1uF 16V | [M] |
| C7009 | F2A0J222A247 | 2200uF 6.3V | [M] |
| C7011 | F2A0J3310059 | 330uF 6.3V | [M] |
| C7012 | F2A0J3310059 | 330uF 6.3V | [M] |
| C7013 | F2A0J3310059 | 330uF 6.3V | [M] |
| C7014 | F2A0J3310059 | 330uF 6.3V | [M] |
| C7015 | F2A0J3310059 | 330uF 6.3V | [M] |
| C7016 | F2A1C470A234 | 47uF 16V | [M] |
| C7017 | ECA1CAK100XB | 10uF 16V | [M] |
| C7021 | F2A1A101A206 | 100uF 10V | [M] |
| C7028 | F1K1E106A078 | 10uF 25V | [M] |
| C7033 | F2A1C471A537 | 470uF 16V | [M] |
| C7034 | F2A1C471A537 | 470uF 16V | [M] |
| C7051 | ECJ1VB1H102K | 1000pF 50V | [M] |
| C7052 | ECJ1VB1H102K | 1000pF 50V | [M] |
| C7057 | ECJ1VB1H104K | 0.1uF 50V | [M] |
| C7059 | F1H1E105A116 | 1uF 25V | [M] |
| C7067 | F2A1C471A537 | 470uF 16V | [M] |
| C7068 | ECEA1AKA101B | 100uF 10V | [M] |
| C7070 | ECJ1VB1H392K | 3900pF 50V | [M] |
| C7082 | ECJ1VB1H104K | 0.1uF 50V | [M] |
| C7728 | F1K1E106A078 | 10uF 25V | [M] |
| C7733 | F2A1C471A537 | 470uF 16V | [M] |
| C7757 | ECJ1VB1H104K | 0.1uF 50V | [M] |
| C7767 | F2A1C471A537 | 470uF 16V | [M] |
| C7782 | ECJ1VB1H104K | 0.1uF 50V | [M] |
| C7783 | ECJ1VB1A105K | 1uF 10V | [M] |
| C7784 | ECA0JAK101XB | 100uF 6.3V | [M] |
| C8001 | F2A0J331A247 | 330uF 6.3V | [M] |
| C8002 | F2A0J470A245 | 47uF 6.3V | [M] |
| C8003 | F2A0J470A245 | 47uF 6.3V | [M] |
| C8004 | F2A0J470A245 | 47uF 6.3V | [M] |
| C8005 | ECJ1VB1H472K | 4700pF 50V | [M] |
| C8006 | F2A0J470A245 | 47uF 6.3V | [M] |
| C8014 | ECJ1VB1H104K | 0.1uF 50V | [M] |
| C8015 | ECJ1VC1H220J | 22pF 50V | [M] |
| C8016 | ECJ1VC1H220J | 22pF 50V | [M] |
| C8017 | F1J0J106A014 | 10uF 6.3V | [M] |
| C8018 | F1J0J106A014 | 10uF 6.3V | [M] |
| C8026 | ECJ1VB1H472K | 4700pF 50V | [M] |
| C8047 | ECJ1VB1H472K | 4700pF 50V | [M] |
| C8051 | ECJ1VB1H472K | 4700pF 50V | [M] |
| C8053 | ECJ1VC1H101J | 100pF 50V | [M] |
| C8054 | ECJ1VC1H101J | 100pF 50V | [M] |
| C8064 | ECJ1VB1H472K | 4700pF 50V | [M] |
| C8086 | ECJ1VB1H472K | 4700pF 50V | [M] |
| C8096 | ECJ1VB1H472K | 4700pF 50V | [M] |
| C8097 | ECJ1VB1H472K | 4700pF 50V | [M] |
| C8098 | ECJ1VB1H472K | 4700pF 50V | [M] |
| C8099 | ECJ1VB1H472K | 4700pF 50V | [M] |
| C8401 | ECJ1VB1H102K | 1000pF 50V | [M] |
| C8402 | ECJ1VB1H102K | 1000pF 50V | [M] |
| C8403 | ECJ1VB1H102K | 1000pF 50V | [M] |
| C8404 | ECJ1VB1H102K | 1000pF 50V | [M] |
| C8405 | F2A0J1220028 | 1200uF 6.3V | [M] |
| C8407 | ECJ1VB1H102K | 1000pF 50V | [M] |
| C8408 | ECJ1VB1H102K | 1000pF 50V | [M] |
| | | | |
| | | | |
| | | | |
| | | | |
| | | | |
| | | | |
| | | | |